BRINE DISPOSAL WELL PERMIT APPLICATION

SENECA WELL # 38282
(API # 37-047-32885)

ARM Group Inc.

Earth Resource Engineers and Consultants

Prepared for:

Seneca Resources Corporation
5800 Corporate Boulevard
Pittsburgh, PA 15237

Prepared by:

ARM Group Inc.
1129 West Governor Road
P.O. Box 797
Hershey, PA 17033-0797

May 2016, Revised September 2016
ARM Project No. 160105

Table of Contents
Underground Injection Control (UIC)
Class II Well Permit Application
Brine Disposal Well #38282
Seneca Resources Corporation
Highland Township, Elk County, PA

Figures

Tables

Appendices

OMB No. 2040-0042 Approval Expires 12/31/2018

EPA

United States Environmental Protection Agency

Underground Injection Control Permit Application

(Collected under the authority of the Safe Drinking Water Act. Sections 1421, 1422, 40 CFR 144)

I. EPA ID Number			
		T/A	C
U			

Read Attached Instructions Before Starting

For Official Use Only

Application approved mo day year	Date received mo day year	Permit Number	Well ID	FINDS Number

II. Owner Name and Address			III. Operator Name and Address		
Owner Name: Seneca Resources Corporation			Owner Name: Seneca Resources Corporation		
Street Address: 5800 Corporate Blvd., Suite 300		Phone Number: (412) 548-2500	Street Address: 5800 Corporate Blvd., Suite 300		Phone Number: (412) 548-2500
City: Pittsburgh	State: PA	ZIP CODE: 15237	City: Pittsburgh	State: PA	ZIP CODE: 15237

IV. Commercial Facility	V. Ownership	VI. Legal Contact	VII. SIC Codes
[ ] Yes [x] No	[x] Private [ ] Federal [ ] Other	[ ] Owner [x] Operator	1389 - Oil & Gas Field Services, not elsewhere classified.

VIII. Well Status *(Mark "x")*

[ ] A. Operating	Date Started mo day year	[x] B. Modification/Conversion	[ ] C. Proposed

IX. Type of Permit Requested *(Mark "x" and specify if required)*

[x] A. Individual	[ ] B. Area	Number of Existing Wells	Number of Proposed Wells	Name(s) of field(s) or project(s)
		1	1	Seneca Well #38282 API # 37-047-32885

X. Class and Type of Well *(see reverse)*

A. Class(es) (enter code(s))	B. Type(s) (enter code(s))	C. If class is "other" or type is code 'x,' explain	D. Number of wells per type (if area permit)
II	D	N/A	N/A

XI. Location of Well(s) or Approximate Center of Field or Project

Latitude Deg	Latitude Min	Latitude Sec	Longitude Deg	Longitude Min	Longitude Sec	Township and Range Sec	Twp	Range	1/4 Sec	Feet From	Line	Feet From	Line
041	036	44.7	078	049	20.2								

XII. Indian Lands (Mark 'x')

[ ] Yes
[x] No

XIII. Attachments

(Complete the following questions on a separate sheet(s) and number accordingly; see instructions)

For Classes I, II, III, (and other classes) complete and submit on a separate sheet(s) Attachments A--U (pp 2-6) as appropriate. Attach maps where required. List attachments by letter which are applicable and are included with your application.

XIV. Certification

I certify under the penalty of law that I have personally examined and am familiar with the information submitted in this document and all attachments and that, based on my inquiry of those individuals immediately responsible for obtaining the information, I believe that the information is true, accurate, and complete. I am aware that there are significant penalties for submitting false information, including the possibility of fine and imprisonment. (Ref. 40 CFR 144.32)

A. Name and Title *(Type or Print)*	B. Phone No. *(Area Code and No.)*
Doug Kepler, Vice President, Environmental Engineering	(814) 771-0281
C. Signature: DAKepler	D. Date Signed: 05/13/16

EPA Form 7520-6 (Rev. 12-11)

Well Class and Type Codes

Class I Wells used to inject waste below the deepest underground source of drinking water.

Type "I" Nonhazardous industrial disposal well
"M" Nonhazardous municipal disposal well
"W" Hazardous waste disposal well injecting below USDWs
"X" Other Class I wells (not included in Type "I," "M," or "W")

Class II Oil and gas production and storage related injection wells.

Type "D" Produced fluid disposal well
"R" Enhanced recovery well
"H" Hydrocarbon storage well (excluding natural gas)
"X" Other Class II wells (not included in Type "D," "R," or "H")

Class III Special process injection wells.

Type "G" Solution mining well
"S" Sulfur mining well by Frasch process
"U" Uranium mining well (excluding solution mining of conventional mines)
"X" Other Class III wells (not included in Type "G," "S," or "U")

Other Classes Wells not included in classes above.
Class V wells which may be permitted under §144.12.
Wells not currently classified as Class I, II, III, or V.

Attachments to Permit Application

Class	Attachments
I new well	A, B, C, D, F, H – S, U
existing	A, B, C, D, F, H – U
II new well	A, B, C, E, G, H, M, Q, R; optional – I, J, K, O, P, U
existing	A, E, G, H, M, Q, R, – U; optional – J, K, O, P, Q
III new well	A, B, C, D, F, H, I, J, K, M – S, U
existing	A, B, C, D, F, H, J, K, M – U
Other Classes	To be specified by the permitting authority

INSTRUCTIONS - Underground Injection Control (UIC) Permit Application

Paperwork Reduction Act: The public reporting and record keeping burden for this collection of information is estimated to average 224 hours for a Class I hazardous well application, 110 hours for a Class I non-hazardous well application, 67 hours for a Class II well application, and 132 hours for a Class III well application. Burden means the total time, effort, or financial resource expended by persons to generate, maintain, retain, or disclose or provide information to or for a Federal Agency. This includes the time needed to review instructions; develop, acquire, install, and utilize technology and systems for the purposes of collecting, validating, and verifying information, processing and maintaining information, and disclosing and providing information; adjust the existing ways to comply with any previously applicable instructions and requirements; train personnel to be able to respond to the collection of information; search data sources; complete and review the collection of information; and, transmit or otherwise disclose the information. An agency may not conduct or sponsor, and a person is not required to respond to, a collection of information unless it displays a currently valid OMB control number. Send comments on the Agency's need for this information, the accuracy of the provided burden estimates, and any suggested methods for minimizing respondent burden, including the use of automated collection techniques to Director, Collection Strategies Division, U.S. Environmental Protection Agency (2822), 1200 Pennsylvania Ave., NW, Washington, DC 20460. Include the OMB control number in any correspondence. Do not send the completed forms to this address.

This form must be completed by all owners or operators of Class I, II, and III injection wells and others who may be directed to apply for permit by the Director.

I. **EPA I.D. NUMBER** - Fill in your EPA Identification Number. If you do not have a number, leave blank.

II. **OWNER NAME AND ADDRESS** - Name of well, well field or company and address.

III. **OPERATOR NAME AND ADDRESS** - Name and address of operator of well or well field.

IV. **COMMERCIAL FACILITY** - Mark the appropriate box to indicate the type of facility.

V. **OWNERSHIP** - Mark the appropriate box to indicate the type of ownership.

VI. **LEGAL CONTACT** - Mark the appropriate box.

VII. **SIC CODES** - List at least one and no more than four Standard Industrial Classification (SIC) Codes that best describe the nature of the business in order of priority.

VIII. **WELL STATUS** - Mark Box A if the well(s) were operating as injection wells on the effective date of the UIC Program for the State. Mark Box B if wells(s) existed on the effective date of the UIC Program for the State but were not utilized for injection. Box C should be marked if the application is for an underground injection project not constructed or not completed by the effective date of the UIC Program for the State.

IX. **TYPE OF PERMIT** - Mark "Individual" or "Area" to indicate the type of permit desired. Note that area permits are at the discretion of the Director and that wells covered by an area permit must be at one site, under the control of one person and do not inject hazardous waste. If an area permit is requested the number of wells to be included in the permit must be specified and the wells described and identified by location. If the area has a commonly used name, such as the "Jay Field," submit the name in the space provided. In the case of a project or field which crosses State lines, it may be possible to consider an area permit if EPA has jurisdiction in both States. Each such case will be considered individually, if the owner/operator elects to seek an area permit.

X. **CLASS AND TYPE OF WELL** - Enter in these two positions the Class and type of injection well for which a permit is requested. Use the most pertinent code selected from the list on the reverse side of the application. When selecting type X please explain in the space provided.

XI. **LOCATION OF WELL** - Enter the latitude and longitude of the existing or proposed well expressed in degrees, minutes, and seconds or the location by township, and range, and section, as required by 40 CFR Part 146. If an area permit is being requested, give the latitude and longitude of the approximate center of the area.

XII. **INDIAN LANDS** - Place an "X" in the box if any part of the facility is located on Indian lands.

XIII. **ATTACHMENTS** - Note that information requirements vary depending on the injection well class and status. Attachments for Class I, II, III are described on pages 4 and 5 of this document and listed by Class on page 2. Place EPA ID number in the upper right hand corner of each page of the Attachments.

XIV. **CERTIFICATION** - All permit applications (except Class II) must be signed by a responsible corporate officer for a corporation, by a general partner for a partnership, by the proprietor of a sole proprietorship, and by a principal executive or ranking elected official for a public agency. For Class II, the person described above should sign, or a representative duly authorized in writing.

INSTRUCTIONS - Attachments

Attachments to be submitted with permit application for Class I, II, III and other wells.

A. **AREA OF REVIEW METHODS** - Give the methods and, if appropriate, the calculations used to determine the size of the area of review (fixed radius or equation).The area of review shall be a fixed radius of 1/4 mile from the well bore unless the use of an equation is approved in advance by the Director.

B. **MAPS OF WELL/AREA AND AREA OF REVIEW** - Submit a topographic map, extending one mile beyond the property boundaries, showing the injection well(s) or project area for which a permit is sought and the applicable area of review. The map must show all intake and discharge structures and all hazardous waste treatment, storage, or disposal facilities. If the application is for an area permit, the map should show the distribution manifold (if applicable) applying injection fluid to all wells in the area, including all system monitoring points. Within the area of review, the map must show the following:

Class I

The number, or name, and location of all producing wells, injection wells, abandoned wells, dry holes, surface bodies of water, springs, mines (surface and subsurface), quarries, and other pertinent surface features, including residences and roads, and faults, if known or suspected. In addition, the map must identify those wells, springs, other surface water bodies, and drinking water wells located within one quarter mile of the facility property boundary. Only information of public record is required to be included in this map;

Class II

In addition to requirements for Class I, include pertinent information known to the applicant. This requirement does not apply to existing Class II wells;

Class III

In addition to requirements for Class I, include public water systems and pertinent information known to the applicant.

C. **CORRECTIVE ACTION PLAN AND WELL DATA** - Submit a tabulation of data reasonably available from public records or otherwise known to the applicant on all wells within the area of review, including those on the map required in B, which penetrate the proposed injection zone. Such data shall include the following:

Class I

A description of each well's types, construction, date drilled, location, depth, record of plugging and/or completion, and any additional information the Director may require. In the case of new injection wells, include the corrective action proposed to be taken by the applicant under 40 CFR 144.55.

Class II

In addition to requirement for Class I, in the case of Class II wells operating over the fracture pressure of the injection formation, all known wells within the area of review which penetrate formations affected by the increase in pressure. This requirement does not apply to existing Class II wells.

Class III

In addition to requirements for Class I, the corrective action proposed under 40 CFR 144.55 for all Class III wells.

D. **MAPS AND CROSS SECTION OF USDWs** - Submit maps and cross sections indicating the vertical limits of all underground sources of drinking water within the area of review (both vertical and lateral limits for Class I), their position relative to the injection formation and the direction of water movement, where known, in every underground source of drinking water which may be affected by the proposed injection. (Does not apply to Class II wells.)

E. **NAME AND DEPTH OF USDWs (CLASS II)** - For Class II wells, submit geologic name, and depth to bottom of all underground sources of drinking water which may be affected by the injection.

F. **MAPS AND CROSS SECTIONS OF GEOLOGIC STRUCTURE OF AREA** - Submit maps and cross sections detailing the geologic structure of the local area (including the lithology of injection and confining intervals) and generalized maps and cross sections illustrating the regional geologic setting. (Does not apply to Class II wells.)

G. **GEOLOGICAL DATA ON INJECTION AND CONFINING ZONES (Class II)** - For Class II wells, submit appropriate geological data on the injection zone and confining zones including lithologic description, geological name, thickness, depth and fracture pressure.

H. **OPERATING DATA** - Submit the following proposed operating data for each well (including all those to be covered by area permits): (1) average and maximum daily rate and volume of the fluids to be injected; (2) average and maximum injection pressure; (3) nature of annulus fluid; (4) for Class I wells, source and analysis of the chemical, physical, radiological and biological characteristics, including density and corrosiveness, of injection fluids; (5) for Class II wells, source and analysis of the physical and chemical characteristics of the injection fluid; (6) for Class III wells, a qualitative analysis and ranges in concentrations of all constituents of injected fluids. If the information is proprietary, maximum concentrations only may be submitted, but all records must be retained.

I. **FORMATION TESTING PROGRAM** - Describe the proposed formation testing program For Class I wells the program must be designed to obtain data on fluid pressure, temperature, fracture pressure, other physical, chemical, and radiological characteristics of the injection matrix and physical and chemical characteristics of the formation fluids.

For Class II wells the testing program must be designed to obtain data on fluid pressure, estimated fracture pressure, physical and chemical characteristics of the injection zone. (Does not apply to existing Class II wells or projects.)

For Class III wells the testing must be designed to obtain data on fluid pressure, fracture pressure, and physical and chemical characteristics of the formation fluids if the formation is naturally water bearing. Only fracture pressure is required if the program formation is not water bearing. (Does not apply to existing Class III wells or projects.)

J. **STIMULATION PROGRAM** - Outline any proposed stimulation program.

K. **INJECTION PROCEDURES** - Describe the proposed injection procedures including pump, surge, tank, etc.

L. **CONSTRUCTION PROCEDURES** - Discuss the construction procedures (according to §146.12 for Class I, §146.22 for Class II, and §146.32 for Class III) to be utilized. This should include details of the casing and cementing program, logging procedures, deviation checks, and the drilling, testing and coring program, and proposed annulus fluid. (Request and submission of justifying data must be made to use an alternative to packer for Class I.)

M. **CONSTRUCTION DETAILS** - Submit schematic or other appropriate drawings of the surface and subsurface construction details of the well.

N. **CHANGES IN INJECTED FLUID** - Discuss expected changes in pressure, native fluid displacement, and direction of movement of injection fluid. (Class III wells only.)

O. **PLANS FOR WELL FAILURES** - Outline contingency plans (proposed plans, if any, for Class II) to cope with all shut-ins or wells failures, so as to prevent migration of fluids into any USDW.

P. **MONITORING PROGRAM** - Discuss the planned monitoring program. This should be thorough, including maps showing the number and location of monitoring wells as appropriate and discussion of monitoring devices, sampling frequency, and parameters measured. If a manifold monitoring program is utilized, pursuant to §146.23(b)(5), describe the program and compare it to individual well monitoring.

Q. **PLUGGING AND ABANDONMENT PLAN** - Submit a plan for plugging and abandonment of the well including: (1) describe the type, number, and placement (including the elevation of the top and bottom) of plugs to be used; (2) describe the type, grade, and quantity of cement to be used; and (3) describe the method to be used to place plugs, including the method used to place the well in a state of static equilibrium prior to placement of the plugs. Also for a Class III well that underlies or is in an exempted aquifer, demonstrate adequate protection of USDWs. Submit this information on EPA Form 7520-14, Plugging and Abandonment Plan.

R. **NECESSARY RESOURCES** - Submit evidence such as a surety bond or financial statement to verify that the resources necessary to close, plug or abandon the well are available.

S. **AQUIFER EXEMPTIONS** - If an aquifer exemption is requested, submit data necessary to demonstrate that theaquifer meets the following criteria: (1) does not serve as a source of drinking water; (2) cannot now and will not in the future serve as a source of drinking water; and (3) the TDS content of the ground water is morehan 3,000 and less than 10,000 mg/l and is not reasonablyexpected to supply a public water system. Data to demonstrate that the aquifer is expected to be mineral or hydrocarbon production, such as general description of themining zone, analysis of the amenability of the mining zone to the proposed method, and time table for proposed development must also be included. For additional information on aquifer exemptions, see 40 CFR Sections 144.7 and 146.04.

T. **EXISTING EPA PERMITS** - List program and permit number of any existing EPA permits, for example, NPDES, PSD, RCRA, etc.

U. **DESCRIPTION OF BUSINESS** - Give a brief description of the nature of the business.

INTRODUCTION

Seneca Resources Corporation (Seneca) is proposing to convert one of its gas production wells (Seneca Well # 38282, API # 37-047-32885) into an Underground Injection Control (UIC) Class II D Injection Well. The proposed UIC Class II D Injection Well (herein referred to as "Proposed Injection Well") is located in the Kane Field (SRC Warrant 3771) in Highland Township, Elk County, Pennsylvania. Seneca owns and operates numerous gas wells in the Kane Field area.

This application package provides details concerning the Proposed Injection Well and associated monitoring wells (Seneca Well #s 04406, & 04384). In addition, the Proposed Injection Well is less than one-mile south of a recently permitted injection well (Well # 38268, API # 37-047-23835). In 2012, Seneca submitted a Class II D Injection Well Permit Application for Well # 38268. The Permit Application for the Well # 38268 was approved by the United States Environmental Protection Agency (EPA) on June 17, 2014. Both the Proposed Injection Well and Well # 38268 share the same reservoir (Elk 3 Sand). The Elk 3 Sand has been a primary gas reservoir in the Kane Field for over 100 years, as natural gas has been extracted from the Elk 3 sandstone reservoir since 1898. The Elk 3 Sand is now considered to be a depleted reservoir as evidenced by the reservoir pressure decline curves and significant volumes of gas produced since 1898 (as documented herein). As such, Seneca is utilizing the injectivity testing results that were used for Well # 38268 in lieu of additional injectivity testing.

1.0 AREA OF REVIEW METHODS/CALCULATIONS

As part of the UIC Class II D Injection Well Permit Application for Well #38268 (the previously approved injection well), Tetra Tech prepared a document entitled "Area of Review/Zone of Endangerment Analysis for Potential Brine Disposal Injection Well # 38268" dated June 14, 2012. The document summarizes the analytical modeling performed for the area of review/zone of endangerment analysis for Seneca's proposed brine disposal injection Well #38268. The results of the analysis indicated that the increase in head due to the brine disposal injection Well #38268 would remain below the elevation of the lowest most underground source of drinking water (USDW), and that the default area of review of a ¼ mile radius was applicable to the Well #38268 UIC permit application. A copy of the June 14, 2012, document is provided in Appendix B. A copy of the 2012 Injectivity Test Report for Seneca Well #38268 prepared by Tetra Tech is provided in Appendix C. Because of the similarities in well construction and the proximity of the previously permitted Well (#38268) and the Proposed Injection Well, the area of review and injectivity test data are reiterated herein.

The June 14, 2012 Tetra Tech memo referenced above summarized the analytical modeling completed by Tetra Tech. There are multiple methods utilized for calculating the zone of endangerment of an injection well. The most simplistic method is the use of a fixed radius, based on the type of injection well being permitted. Other methods involve calculation of the radius based on well and formation properties. The method used by Tetra Tech is the graphical method first used by EPA Region 6 and involves the calculation of the increase of pressure in the formation due to injection. That pressure is then converted into equivalent feet of head. The increase in head in the formation due to injection is then compared to the equivalent head of the lowest most USDW. When plotted graphically, the intersection of those two curves at some distance (r), determines the radius of the zone of endangerment. The increase in pressure in the formation due to injection depends on the properties of the injection fluid and the formation, the rate of fluid injection, and the length of time of injection. The most common mathematical expression to describe this increase in pressure was developed by Matthews and Russell (1967). Matthews and Russell assume that, for a single well injecting into an infinite, homogeneous and isotropic, non-leaking formation, the increase in pressure (delta p) can be described as:

$$\text{delta } p = 162.6\, Q\, \mu / kh * [(\log(kt / \Psi\, \mu C r^2) - 3.23]$$ where:

delta p = pressure change (psi) at radius, r and time, t
Q = injection rate (barrels/day)
μ = injectate viscosity (centipoise)
k = formation permeability (millidarcies)
h = formation thickness (feet)
t = time since injection began (hours)
C = compressibility (total, sum of water and rock compressibility) (psi^{-1})
r = radial distance from well bore to point of investigation (feet)
Ψ = average formation porosity (decimal)

The following parameters were used in the zone of endangerment analysis completed by Tetra Tech. The majority of the parameters are based on the analysis and results of the injection

testing performed on Well #38268 in March 2012 (Tetra Tech, 2012). The permeability value was based on the results from the injection testing analysis. For the depth to the lowest most USDW, a conservative estimate based on EPA Region 3 guidance and review of site area hydrogeologic conditions was used (i.e., depth to USDW = 400 feet).

Input Parameters for Well #38268

Q = 3,000 barrels/day
t = 10 years = 87,600 hours
μ = 0.9457 centipoise
k = 190 md
h = 49 feet
C = 7.6e-06 psi^{-1}
Ψ = 13.5%
Well radius = 0.29 feet
Specific gravity of injectate = 1.14
Surface elevation = 2,040 feet
Depth to injection formation = 2,354 feet
Base of lowest most USDW (elevation) = 1,640 feet
Initial pressure at top of injection formation = 24 psi

1.1 Results

The Matthews and Russell equation was solved for various distances from the wellbore based on the parameters listed above for permeability value determined from the injection test. The values of delta p were added to the existing pressure in the injection formation to obtain the total pressure in the formation. These values were then converted to feet of head of formation brine. The results are shown in Figure 1 of Appendix B, which shows the calculated pressure surface within the injection formation, measured as feet of head of formation brine above the top of the injection formation. Also shown is the head of the lowest most USDW. If the two lines were to intersect, it would define the radius of the zone of endangerment. For the permeability value of k = 190 md, the increase in head due to injection would remain below the elevation of the lowest most USDW. This permeability value was obtained from injection testing analysis of Well #38268.

1.2 Conclusions

The Tetra Tech analysis of the area of review/zone of endangerment for proposed brine disposal injection wells is based on a methodology typically used by US EPA. For the permeability value of k = 190 md (obtained from injection testing analysis of Well #38268), increase in head due to injection would remain below the elevation of the lowest most USDW. Based on these results and their applicability to the Proposed Injection Well, the well is an excellent candidate for use as a brine disposal well.

In summary, the default area of review of a 0.25 -mile radius from the Proposed Injection Well is applicable for this application.

2.0 AREA OF REVIEW

According to publicly available records, including the Pennsylvania Geologic Survey's Ground Water Information System (PAGWIS) and the Pennsylvania Department of Environmental Protection's Drinking Water Reporting System (DWRS), there are no groundwater wells within the ¼-mile Area of Review for the Proposed Injection Well. The only active oil and gas wells located within ¼-mile of the Proposed Injection Well are Seneca Wells #04406 and #04384, and both of these wells are proposed as monitoring wells for Well #38282 (Table 1). Seneca Well #38281 is located 0.36 miles from the Proposed Injection Well, and Well #38281 is identified as a monitoring well for the previously permitted injection well (#38268).

According to records available through the DWRS, Highland Township (James City) maintains a public water supply consisting of two springs (one active and one inactive), two reserve water wells, and associated pumps, pipes, and storage tanks which are a minimum of over 5,000 feet from the Proposed Injection Well. PAGWIS indicates that a private water well, owned by Randy Klaiber, is located 1.01-miles from the Proposed Injection Well. Additional private well locations within one-mile of the Proposed Injection Well were identified by Seneca based on field reconnaissance, as shown on Figure 1. There are no other identified intake or discharge structures; hazardous waste treatment, storage, or disposal facilities; mines; or quarries within one mile of the Proposed Injection Well. Available information regarding water wells and springs within one-mile of the Proposed Injection Well is provided in Table 2.

A High Quality-Cold Water Fishery (HQ-CWF)-designated unnamed tributary to the East Branch of Tionesta Creek is located approximately 0.7-miles northeast of Well #38282, a HQ-CWF-designated unnamed tributary to Wolf Run is located approximately 0.23-miles northwest of Well #38282, and a HQ-CWF designated unnamed tributary to Wolf Run is located approximately 0.7-miles west of the Proposed Injection Well. The locations of these tributaries are shown in Figure 1.

3.0 CORRECTIVE ACTION PLAN AND WELL DATA

Two wells penetrated the same zone of injection within 0.25-miles of the subject well: Well #04406, and Well #04384. A third well, Well #38281, penetrated the same zone of injection within 0.36-miles of the subject well. All three wells are owned by Seneca and are gas producing wells. The productive intervals of the subject well (#38282) and the three wells within 0.36-miles are shown on Tables 3, 4, 5, and 6.

3.1 Existing Oil and Gas Wells within the Area of Review

Well completion records are required to be submitted for all wells located within the area of review in order to evaluate the need for corrective action specific to each well. The well completion reports for the Proposed Injection Well (Well #38282), and the proposed monitoring wells (Wells #04406, and #04384) are provided in Appendices D, E, and F, respectively. As discussed further in Section 8, Wells #04406, and #04384 will be utilized as monitoring wells and will be properly constructed for that purpose.

3.2 Plugged and Abandoned Oil and Gas Wells within the Area of Review

There are no plugged and abandoned wells within the ¼-mile area of review (AOR) for the Proposed Injection Well (Well #38282). Therefore, no additional corrective action is necessary within the AOR.

4.0 NAME AND DEPTH OF USDWs

The Proposed Injection Well (Well #38282) lies within the Glaciated High Plateau section of the Appalachian Plateaus Physiographic province. The High Plateau Section consists of broad, rounded to flat uplands cut by deep angular valleys. The uplands are underlain by flat-lying sandstones and conglomerates. Local relief between valley bottoms and adjacent uplands can be as much as 1,000-feet, but typically average approximately 500-feet. Elevations in the area range from 980 to 2,630-feet. Dendritic drainage patterns are typical for this area. The western boundary of the area is the Late Wisconsin glacial border. The area between this border and the Allegheny River a few miles to the east was glaciated by pre-Wisconsin glaciers. The area occurs in northwestern Pennsylvania and includes all of Forest County, most of Venango, Warren, and Elk Counties, and small parts of McKean, Jeffereson, and Clarion Counties (http://www.dcnr.state.pa.us/topogeo/map13).

Potable water is generally obtained from bedrock sources in the project area. The uppermost bedrock unit at the site is the Allegheny Group of Pennsylvanian Age. The Allegheny Group consists of limestone, sandstone, shale, and coal deposits. At a depth of 30 to 35-feet below ground surface (bgs), the Pennsylvanian Pottsville Group also consists of limestone, sandstone, shale, and coal deposits. At approximately 200-feet bgs lies the Mississippian/Devonian-Age Shenango through Oswayo groups (undivided), which consist of sandstone, siltstone, and shale. The Upper Devonian siltstones, shale, and sands are present beneath the site beginning from approximately 500-feet bgs to the total depth of the borehole at 2,565 feet bgs. (http://www.dcnr.state.pa.us/topogeo/index.aspx). The geologic units are described further in Section 5.

The PAGWIS and the DWRS were accessed to determine the sources of drinking water in the site area. According to these publicly available sources, there are no groundwater wells within ¼-mile of the Proposed Injection Well.

According to records available through the DWRS, Highland Township (James City) maintains a public water supply (ID #6240006) consisting of two springs (one active and one inactive), two reserve water wells, and associated pumps, pipes, and storage tanks which are a minimum of over 5,000 feet from the Proposed Injection Well (Well #38282). PAGWIS indicates that a private water well, owned by Randy Klaiber, is located 1.01-miles from the Proposed Injection Well. Additional possible private well locations within one-mile of Well # 38282 (and slightly beyond one mile of Well #38282) were identified by Seneca based on field reconnaissance, as shown on Figure 2. There are no other identified intake or discharge structures; hazardous waste treatment, storage, or disposal facilities; mines; or quarries within one mile of the Proposed Injection Well. Available information regarding water wells and springs within one-mile of the Proposed Injection Well is provided in Table 2.

PAGWIS lists only one well within one-mile of Well #38282; however, the well reporting requirement was only established in 1968. PAGWIS is not considered to be a complete record of water wells in the vicinity and other wells may be present (PAGWIS).

Well #38282 is located in the northeastern portion of Highland Township of Elk County. To better understand the underground sources of drinking water, the PAGWIS was searched for all wells within Highland Township and Jones Township (bordering east of Highland Township) of Elk County, and Wetmore Township (bordering north of Highland Township) of McKean County. The PAGWIS indicated that there are 49 recorded wells in Highland Township. Twelve of these wells are owned by National Fuel Gas and according to PAGWIS are listed as test wells (i.e., natural gas wells) ranging from 1,176 to 2,348-feet deep. The deepest water withdrawal well is listed as 320 feet deep, with reported well depths ranging from 58 to 320-feet deep.

The PAGWIS indicated that there are 155 recorded wells in Jones Township. Four of these wells are owned by National Fuel Gas and are listed as test wells (i.e., natural gas wells) ranging from 2,331 to 2,389-feet deep. The deepest water well is listed as 320-feet deep, with reported well depths ranging from 60 to 320-feet deep.

The PAGWIS indicated that there are 41 recorded water wells in Wetmore Township. The deepest well is listed as 245-feet deep, with reported well depths ranging from 55 to 245-feet deep. Based on the available information, the Allegheny Group, Pottsville Formation, and Shenango Group are utilized as underground sources of drinking water in the site area.

In summary, PAGWIS indicates that the deepest ground water wells in the site area are approximately 320-feet deep. Based on this information and the site geologic conditions, 400-feet bgs has been identified as a conservative estimate of the base of the lowermost USDW for the Proposed Injection Well area. It is noted that surface casing for the Proposed Injection Well extends to 561-feet, which is greater than 200 feet deeper than the deepest groundwater drinking source in the Tri-Township Area.

All of the property located within ¼-mile of the Proposed Injection Well is owned by Seneca.

5.0 GEOLOGIC DATA ON INJECTION AND CONFINING ZONES

The uppermost units at the site are mapped as the Allegheny Group of Pennsylvanian Age and the Pennsylvanian-Age Pottsville Group of which both consist of limestone, sandstone, shale, and coal deposits. At approximately 200-feet bgs, the Mississippian/Devonian-Age Shenango through Oswayo groups (undivided) consist of sandstone, siltstone, and shale to approximately 500-feet bgs. The Upper Devonian siltstones, shale, and sands are present beneath the site beginning from approximately 500-feet bgs. Based on structural contour maps from the Pennsylvania Geological Survey, the Precambrian basement rock is located approximately 9,500 feet below the proposed injection zone.

5.1 Injection and Confining Zones

The Proposed Injection Well is designed to inject into the Upper Devonian Elk 3 Sand, with injection into notched and frac'd intervals at a depth of 2,327 to 2,372 feet bgs. As shown on the generalized stratigraphic column (Figure 6), most of the geologic Groups and Formations overlying the Elk 3 Sand can be considered confining units totaling over 2,000-feet. Although many of these units are predominantly shale and siltstone, the Upper Devonian Speechley Sand also contains reservoir rock. The confining zone immediately above and adjacent to the Elk 3 Sand is designated by Seneca as the Elk 3 shale. There are additional shales, silty shales, and siltstones above the Elk 3 which provide additional confining zones.

As depicted in the graph in Appendix A, Attachment 2, the initial reservoir pressures of 425-440 pounds per square inch (psi) were documented when the Elk 3 reservoir was first produced in 1898. Over time, reservoir pressure decreased as production continued. In June 2013, Seneca shut-in Well #38268 and others around it to record current reservoir pressures. Well # 38268 had a shut-in casing pressure of 26.6 psi and nearby wells had pressures ranging from 20.6 psi to 54.3 psi.

The Elk 3 has been a substantial gas-producing reservoir since the late 1800s. Estimated cumulative production from selected wells near Well #38268 is summarized in the table provided in Appendix A, Attachment 3. The Elk 3 Sandstone is a depleted reservoir, as evidenced by the reservoir pressure decline curves and significant volumes of gas produced since 1898.

Also provided herein are the following documents:

- Appendix D - Seneca #38282 (proposed Seneca injection well) completion record, treatment record, service company job logs documenting cement returns, and geophysical log
- Appendix E - Seneca #04406 (proposed monitoring well) completion record and treatment report
- Appendix F - Seneca #04384 (proposed monitoring well) completion record and treatment report

5.2 Review of Induced Seismicity Potential

The EPA recently published a report that looks at injection-induced seismicity ("Minimizing and Managing Potential Impacts of Induced-Seismicity from Class II Disposal Wells: A Practical Approach," EPA UIC National Technical Workgroup, finalized February 5, 2015), which provides a standard operating procedure for assessing regional and local seismicity when reviewing permit applications. This procedure correlates any area seismicity with past injection practices; evaluates geological information to assess the likelihood of activating any faults; evaluates storage capacity of the formation with consideration of porosity and permeability; includes operational parameters to limit injection rate and volume and to limit operation at below fracture pressure; and requires monitoring of injection pressure and rates. (EPA, 2015)

5.2.1 Induced Seismicity Background

Under certain conditions, disposal of fluids through injection wells has the potential to trigger seismicity. However, induced seismicity associated with brine injection is uncommon, as conditions necessary to trigger seismicity often are not present. Seismic activity induced by Class II wells is likely to occur only where *all* of the following conditions are present: (1) there is a fault in a near-failure state of stress; (2) the fluid injected has a path of communication to the fault; and (3) the pressure exerted by the fluid is high enough and lasts long enough to allow movement along the fault line. Although there are approximately 30,000 Class II-D wastewater disposal wells operating in the United States, only a few of these wells have been documented to have triggered earthquakes of significance and none of these earthquakes has caused injected fluids to flow into or contaminate a USDW.

The presence of a fault in a receiving formation potentially creates a more vulnerable condition for a future seismic event. Where a fault is present near an injection site, injection can potentially trigger seismicity when the pore pressure (pressure of fluid in the pores of the subsurface rocks) in the formation increases to such levels as to overcome the frictional force that keeps the fault stable. Pore pressure increases with increases in the volume and rate of injected fluid. Thus, the probability of triggering a significant seismic event due to injection, where the injection fluid reaches an active fault, increases with the volume and the rate of fluid injected. At high enough pore pressure, the reduction in frictional forces can result in the formation shifting along the fault line, resulting in a seismic event. (EPA, 2015)

5.2.2 Faults Near the Proposed Injection Well

The EPA UIC permit regulations require that all new Class II injection wells be sited in such a fashion that they inject into a formation which is separated from any USDW by a confining zone that is free of known open faults or fractures within the AOR. Open faults, or transmissive faults, may allow fluid to move along the fault and between formations. Nontransmissive faults, on the other hand, act as a barrier which would prevent movement of fluid along the fault and into another formation across the fault. The UIC Class II requirements focus on ensuring that open faults are not present within the area an injection operation could influence. (EPA, 2015)

Seneca has been operating in this area for over 100 years and is not aware of any faults, transmissive or nontransmissive, within the AOR that could be influenced by the injection operation. In addition, Precambrian basement rocks are located approximately 9,500 feet below the proposed injection zone, and therefore, are not considered to be a concern at this location.

The United States Geologic Survey (USGS) tracks, records and maps faults and earthquake epicenters in certain areas throughout the United States. The USGS monitors several active seismometers located in Pennsylvania. The USGS as well as the Pennsylvania Department of Conservation and Natural Resources (PA DCNR) which includes the Bureau of Topographic and Geologic Survey have not recorded any seismic activity that has originated in Elk or McKean County. The following PA DCNR website has an interactive seismicity map and catalog of all recorded seismic events in or near Pennsylvania from 1724 to present: (http://www.dcnr.state.pa.us/topogeo/hazards/earthquakes/index.html).

Reference:

EPA (2015) - Response to Comments for the Issuance of an Underground Injection Control (UIC) Permit for Sammy-Mar LLC, US Environmental Protection Agency - Region III, Environmental Appeals Board, September 10, 2015

6.0 OPERATING DATA

The Proposed Injection Well (#38282) will be utilized to inject produced water and flow-back water from wells which are solely owned and operated by Seneca, and which are completed in the Marcellus Shale, the Elk 3 Sand and other natural gas and oil producing formations. Other oil and gas-related wastewaters associated with the production of oil and natural gas or natural gas storage operations, which are approved by EPA for injection under a UIC Class II D injection well, may also be injected. According to Title 40 Chapter I Sec. 144.6(b)(1), such fluids include those "Which are brought to the surface in connection with natural gas storage operations, or conventional oil or natural gas production and may be co-mingled with waste waters from gas plants which are an integral part of production operations, unless those waters are classified as a hazardous waste at the time of injection."

6.1 Injection Rate

Injectivity testing performed on the previously proposed injection well (Seneca Well #38268) indicated the well may be capable of sustaining an injection rate of greater than 2 barrels per minute (bbl/m, approximately 3,000 bbl/d) with pressures remaining under the likely UIC Class IID permit limits for maximum injection pressure. Seneca proposes a maximum injection rate of 3,000 bbl/day for operation of the Well #38282, with an average injection rate of 2,000 bbl/day expected. The Injectivity Test Report for Well #38268 (Tetra Tech, 2012) is provided in Appendix C.

6.2 Maximum Allowable Surface Injection Pressure (MASIP) and Average Surface Injection Pressure

MASIP calculations based on EPA-approved equations are shown below. Based on these calculations, the proposed MASIP is 1,416 psi. Seneca estimates that the average surface injection pressure will be approximately 1,000 psi.

Maximum Injection Pressure (MIP)
Calculations for Seneca Well #38268

1) Frac Gradient (FG) Based on Well #38268 Elk 3 Sand Frac

FG = [ISIP + (0.433 x SG x D)]/D, where

Instantaneous Shut-In Pressure (ISIP) (psi)	Hydrostatic Factor (psi/ft)	Specific Gravity (SG)	Depth (ft)
1,580	0.433	1 (Water)	2,354

FG = [1,580 psi + (0.433 psi/ft x 1 x 2,354 ft)] / 2,354 ft
FG = 1.104 psi/ft

2) Maximum Injection Pressure (MIP)

MIP = [FG - (0.433 x SG)] x D, where

Frac Gradient (FG) (psi/ft)	Specific Gravity (SG)	Depth (ft)
1.104	1.16 (Brine)	2,354

MIP = [1.104 psi/ft - (0.433 psi/ft x 1.16)] x 2,354 ft

MIP = 1,416 psi

Should brine with a specific gravity greater than 1.16 be injected, Seneca understands that the MIP will need to be reduced accordingly.

6.3 Laboratory Analysis of Injection Fluid Samples

A summary of laboratory analytical results for samples representative of the types of brine which will be injected into the Proposed Injection Well are attached in Appendix G. Samples were collected from produced water generated from gas wells in the vicinity of the Proposed Injection Well. The samples are characterized by an average specific gravity of approximately 1.14, an average pH of 6.08, and an average conductivity of 194.09 microSiemens per centimeter (uS/cm). In addition, Seneca completed a Total Organic Carbon (TOC) analysis of the types of brine which will be injected into the Proposed Injection Well. The TOC concentration was reported as 5.49 milligrams per liter (mg/l). The laboratory analytical report is included in Appendix G.

6.4 Monitoring of Injection Fluid Samples and Well

The following identifies the UIC Class II underground injection well regulatory requirements and the operational procedures which will be conducted by Seneca to meet the subject requirements:

1. **Monitoring of the nature of injected fluids at time intervals sufficiently frequent to yield data representative of their characteristics.** A sample of fluid will be collected and analyzed from initial loads proposed for disposal. In addition, samples will be collected for analysis from new types of sources (e.g., from different geologic formations, geographic regions, etc.) which would be expected to differ significantly from brine previously characterized for disposal at the facility. Samples will be analyzed for the following parameters at a minimum: specific gravity, total dissolved solids, total organic carbon, and pH.

2. **Observation of injection pressure, flow rate, and cumulative volume at least weekly based on the regulatory requirements for produced fluid disposal operations.** Injection pressures, flow rate, and cumulative volume will be continuously monitored and recorded electronically via Seneca's use of a supervisory control and data acquisition (SCADA) system.

3. **A demonstration of mechanical integrity pursuant to 40 CFR Sec. 146.8 at least once every five years during the life of the injection well.** A mechanical integrity test will be performed prior to initiating injection and at least once every five years during the life of the injection well.

4. **Maintenance of the results of all monitoring until the next permit review.** All monitoring records will be maintained throughout the life of the injection well.

In addition to the commitments listed above, Seneca will prepare and submit an annual report to EPA summarizing the results of the required monitoring, including monthly records of injected fluids and any major changes in characteristics or sources of injected fluid.

6.5 Proposed Annulus Fluid

The proposed annulus fluid for the Proposed Injection Well will consist of fresh water and a water-soluble corrosion inhibitor. The corrosion inhibitor will be mixed in accordance with the manufacturer's recommendations and loaded into the well annulus prior to conducting injection operations. Product information for the type of corrosion inhibitor which will be utilized is attached in Appendix H. A similar type product may be substituted by Seneca.

6.6 Facility Layout and Operation

As indicated in the attached facility layout diagram (Figure 7), the injection well facility will include a truck unloading area and holding tanks connected by piping with associated valves, all of which will be situated in a diked containment area. The containment area will be properly sized to account for the entire volume of the largest container, plus 10% freeboard. The brine will be transferred to the injection well utilizing injection pumps situated in the equipment shed along with filters and monitoring equipment. Automatic shut-off valves will be incorporated into the tank design to prevent overflow during filling operations. The facility will be surrounded by a fence equipped with locking entrance and exit gates. A security camera will also be strategically situated on the site. The facility will be continually manned during unloading and injection operations. As indicated above, injection rate, cumulative volume and pressures will be continuously measured and recorded.

7.0 WELL CONSTRUCTION DETAILS

Well construction details for Wells #38282, #04406, and #04384 are provided in Figures 8, 9, and 10, respectively.

8.0 MONITORING PROGRAM

Prior to the commencement of injection operations at Well #38282, Seneca will install 4-½ inch casing, cementing it back to the surface. A 2-⅞ inch tubing will be installed on a packer set immediately above the injection zone. This tubing will be used to convey fluid from the surface directly to the Elk 3 Sand. The annulus between the tubing and the 4-½ inch casing will be filled with anti-corrosive agents to protect both the tubing and the casing. Seneca will monitor pressure and fluid level (utilizing an Echometer) in the annulus between the 4-½ inch casing and the 2-⅞ inch tubing prior to injection operations and continuously while injection is occurring at Well #38282. Specifically, Seneca will fill the annular space between the 4-1/2" casing and the injection tubing with an incompressible, anti-corrosive fluid with a pressure of 100-150 psi. Seneca will continually monitor the annular fluid pressure via the SCADA system and will install an alarm and automatic shut-off device which would be activated should the annular pressure exceed prescribed guidelines.

Prior to monitoring being performed at Wells #04406, and #04384, each well will be shut-in and modified to isolate the Elk 3 Sand, as described below. This will be done to effectively monitor conditions in the Elk 3 Sand only. Wells #04406, and #04384 were both drilled in 1942 and will be utilized as monitor wells for injection at Well #38282 (Figure 4). The existing conditions of the proposed monitoring wells are presented in the well construction diagrams attached as Figures 9 and 10 respectively. In each proposed monitoring well, Seneca will plug back above the Elk 3 Sand, install long-string casing on a formation packer to the top of the Elk 3 Sand, and then cement the casing in place. Subsequently, the plug, cement, and plug back material will be drilled out in order to regain full communication with the Elk 3 Sand below the production casing. Seneca will demonstrate that the long-string casing and packer are pressure tight in order to ensure the observed fluid level in the casing is an accurate measure of injection formation pressure.

Seneca proposes to conduct quarterly monitoring at the monitor wells. At the beginning of each monitoring period, each monitoring well will be shut in for a period of approximately one week to allow for equilibration with respect to pressures and fluid levels in the Elk 3 Sand. Once equilibrium has been reached in the monitoring wells, Seneca will record surface pressures and downhole fluid levels. If fluid levels in the Elk 3 Sand in the monitoring wells are stable, Seneca reserves the right to pump, swab, or bail the fluid out of the wellbore in order to effectively produce gas from the injection zone. If the fluid level in any monitoring well is observed to rise to within 300-feet of the base of the USDW, disposal operations in Well #38282 will be stopped immediately, EPA will be notified, and operating conditions will be evaluated in order to control the fluid levels.

Injection Well	Monitoring Well	Approximate Distance and Direction From Injection Well
Seneca #38282	Seneca #04406	1,000-feet northwest
Seneca #38282	Seneca #04384	1,000-feet northeast

9.0 PLUGGING AND ABANDONMENT PLAN

At the point when the Proposed Injection Well is no longer used, the well will be abandoned in accordance with EPA and PADEP regulations. With regard to PADEP regulations, this currently includes providing a "Notice of Intent to Plug a Well" no less than 3 days and no more than 30 days prior to abandoning the well, to allow a PADEP inspector to be present during the plugging procedure. The PADEP may waive the notification period. The notification that Seneca will provide will include the well location plat, well logs, production logs, injection logs, construction details, and proposed abandonment method. After receiving approval from PADEP to proceed, the well will be abandoned and the abandonment procedures will be documented on a "Certificate of Plugging".

A contractor cost estimate to perform plugging and abandonment according to the proposed plugging plan is attached in Appendix I. The contractor estimate is $22,300. In addition, a $10,000 contingency has been added resulting in a total estimate of $32,300 for plugging and abandonment costs. The EPA will be notified of the plugging activity at least 45 days prior to commencing activities. This notification will include EPA Form No. 7520-14. A proposed plugging plan (Form 7520-14) is attached in Appendix J based on the current PADEP and EPA regulations. However, this may be modified prior to plugging in order to meet the requirements at the time of the plugging activity.

10.0 NECESSARY RESOURCES

Attached are the Seneca Resources Corporation Financial Statements to demonstrate that the company has the resources necessary to plug and abandon the well. Seneca Resources Corporation is a subsidiary of National Fuel Gas Company. The Chief Financial Officer (CFO) of National Fuel Gas Company has completed the CFO Letter for Class II Injection Well Operators on Seneca's behalf (Appendix K). Also enclosed are copies of the 2015 National Fuel Gas Company Annual Report, and the 2015 U.S. Securities and Exchange Commission Form 10-K.

11.0 PLAN FOR WELL FAILURES

Seneca will continuously monitor the pressure in the annulus between the 4 ½-inch casing and tubing during injection at the Proposed Injection Well. Should a pressure increase occur in the monitored space, injection will cease and EPA will be verbally notified within 24 hours and notified in writing within 7 days. The cause of the pressure increase will be investigated by Seneca, and remedial measures will be implemented following discussions with EPA on the proposed approach.

FIGURES

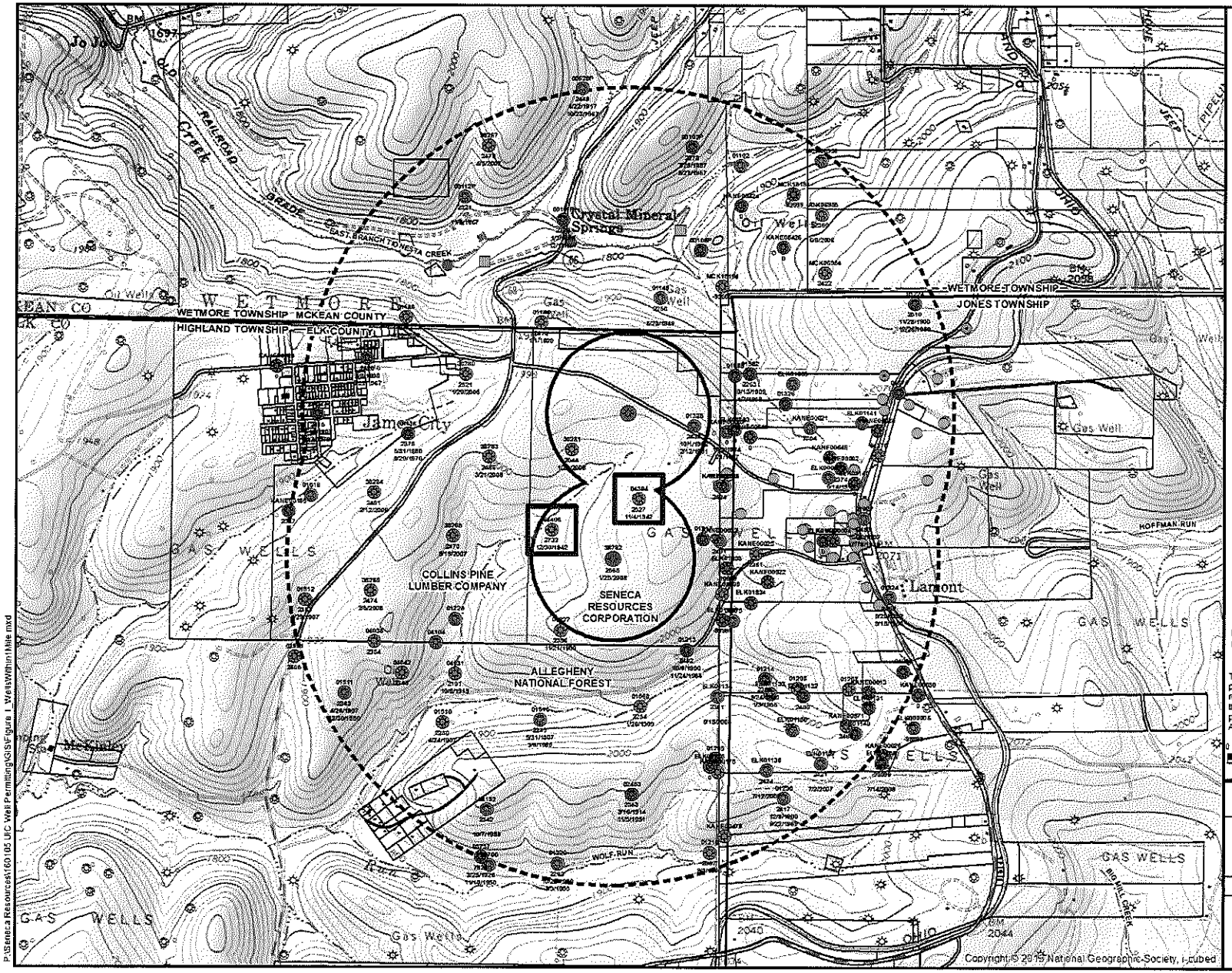

LEGEND

- PERMITTED INJECTION WELL
- PROPOSED INJECTION WELL
- 1/4 MILE RADIUS
- 1 MILE RADIUS
- PROPOSED MONITORING WELL
- PARCEL BOUNDARY
- LOCATED OIL AND GAS WELL
- NO WELL FOUND
- PRIVATE WATER WELL
- POSSIBLE WATER WELL (BASED ON FIELD OBSERVATIONS BY SENECA)
- SPRING (JAMES CITY WATER AUTHORITY)
- WATER WELL (JAMES CITY WATER AUTHORITY)

WELL STATUS

- EXISTING
- PLUGGED/ABANDONED
- LOCATION
- UNKNOWN

REF: Base map from ESRI USA Topo Maps. Refer to USGS 7.5 minute Quads Kane and James City, PA.

0 750 1,500 3,000 4,500

SCALE IN FEET

Wells Within 1 Mile of Seneca Wells 38268 & 38282

Seneca Resources Corporation
Highland, Jones and Wetmore Townships,
McKean and Elk Counties, Pennsylvania

May, 2016	Scale: 1" = 1,500'	160105

ARM Group Inc.
Earth Resource Engineers and Consultants
www.armgroup.net

Figure 1

P:\Seneca Resources\160105 UIC Well Permitting\GIS\Figure 1_WellsWithin1Mile.mxd

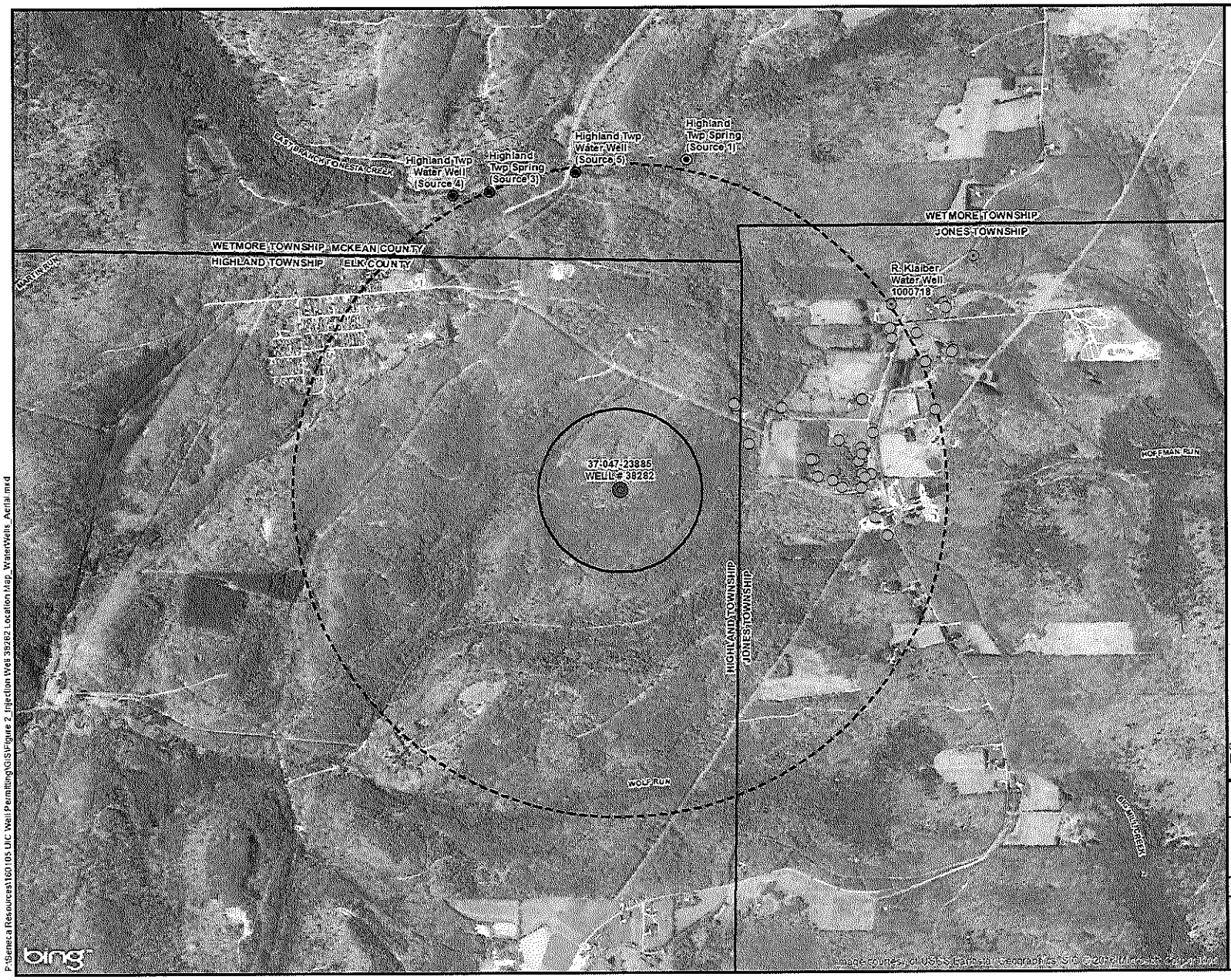

N

LEGEND

- WELL # 38282
- AREA OF REVIEW (1/4 MILE)
- 1 MILE RADIUS
- PRIVATE WATER WELL
- POSSIBLE WATER WELL (BASED ON FIELD OBSERVATIONS BY SENECA)
- ACTIVE WATER SUPPLY
- BACKUP WATER SUPPLY

REF: Base map from Bing Maps, dated 2011.

0 750 1,500 3,000 4,500

SCALE IN FEET

Location Map (Aerial) with Water Sources

Seneca Resources Corporation
Highland, Jones and Wetmore Townships,
McKean and Elk Counties, Pennsylvania

March, 2016	Scale: 1" = 1,500'	160105

ARM Group Inc.
Earth Resource Engineers and Consultants
www.armgroup.net

Figure 2

P:\Seneca Resources\160105 UIC Well Permitting\GIS\Figure 2 Injection Well 38282 Location Map_WaterWells_Aerial.mxd

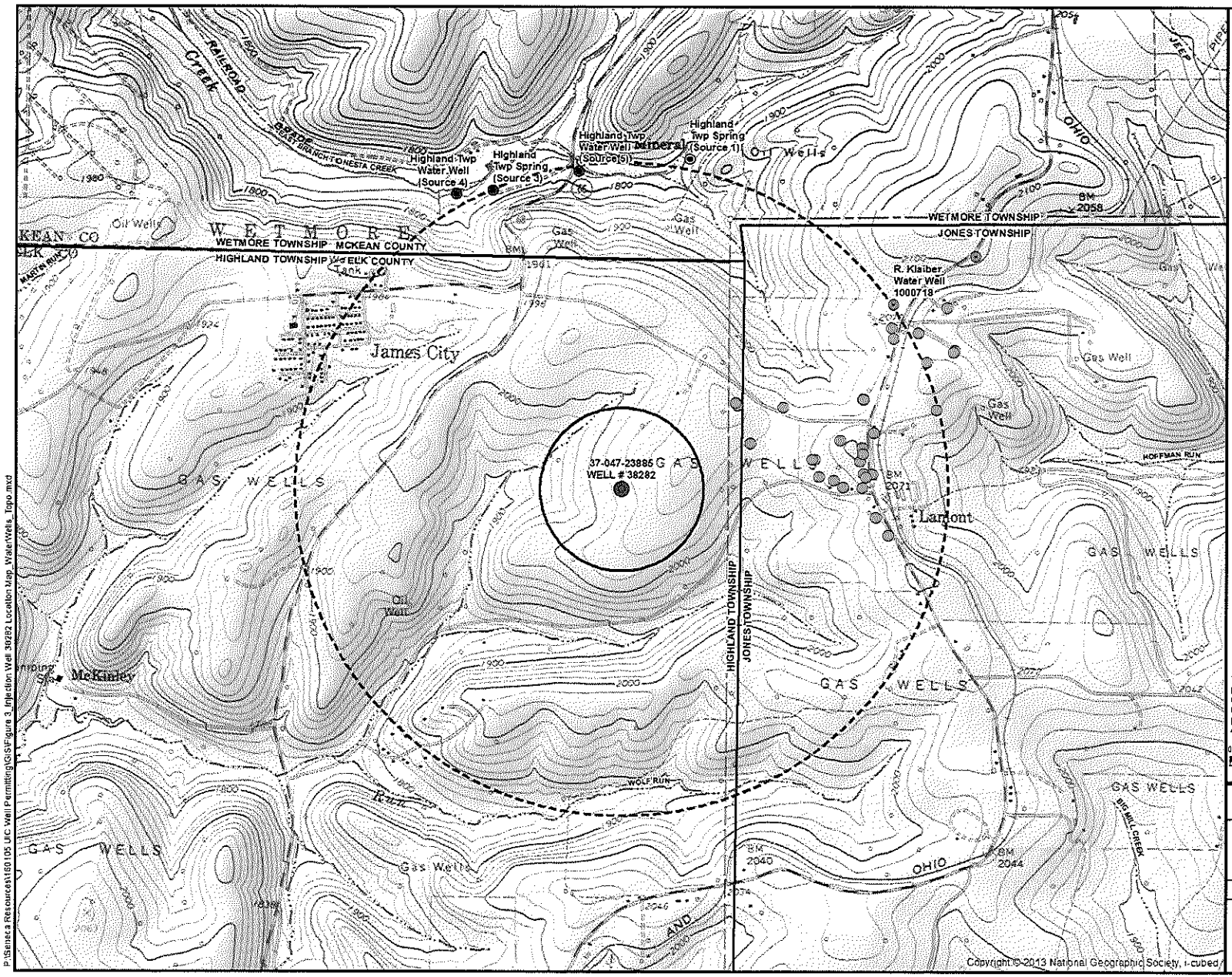

LEGEND

- WELL # 38282
- AREA OF REVIEW (1/4 MILE)
- 1 MILE RADIUS
- PRIVATE WATER WELL
- POSSIBLE WATER WELL (BASED ON FIELD OBSERVATIONS BY SENECA)
- ACTIVE WATER SUPPLY
- BACKUP WATER SUPPLY

REF: Base map from ESRI USA Topo Maps. Refer to USGS 7.5 minute Quads Kane and James City, PA.

0 750 1,500 3,000 4,500
SCALE IN FEET

Location Map (Topo) with Water Sources

Seneca Resources Corporation
Highland, Jones and Wetmore Townships,
McKean and Elk Counties, Pennsylvania

March, 2016	Scale: 1" = 1,500'	160105

ARM Group Inc.
Earth Resource Engineers and Consultants
www.armgroup.net

Figure 3

P:\Seneca Resources\160105 UIC Well Permitting\GIS\Figure 3_Injection Well 38282 Location Map_WaterWells_Topo.mxd

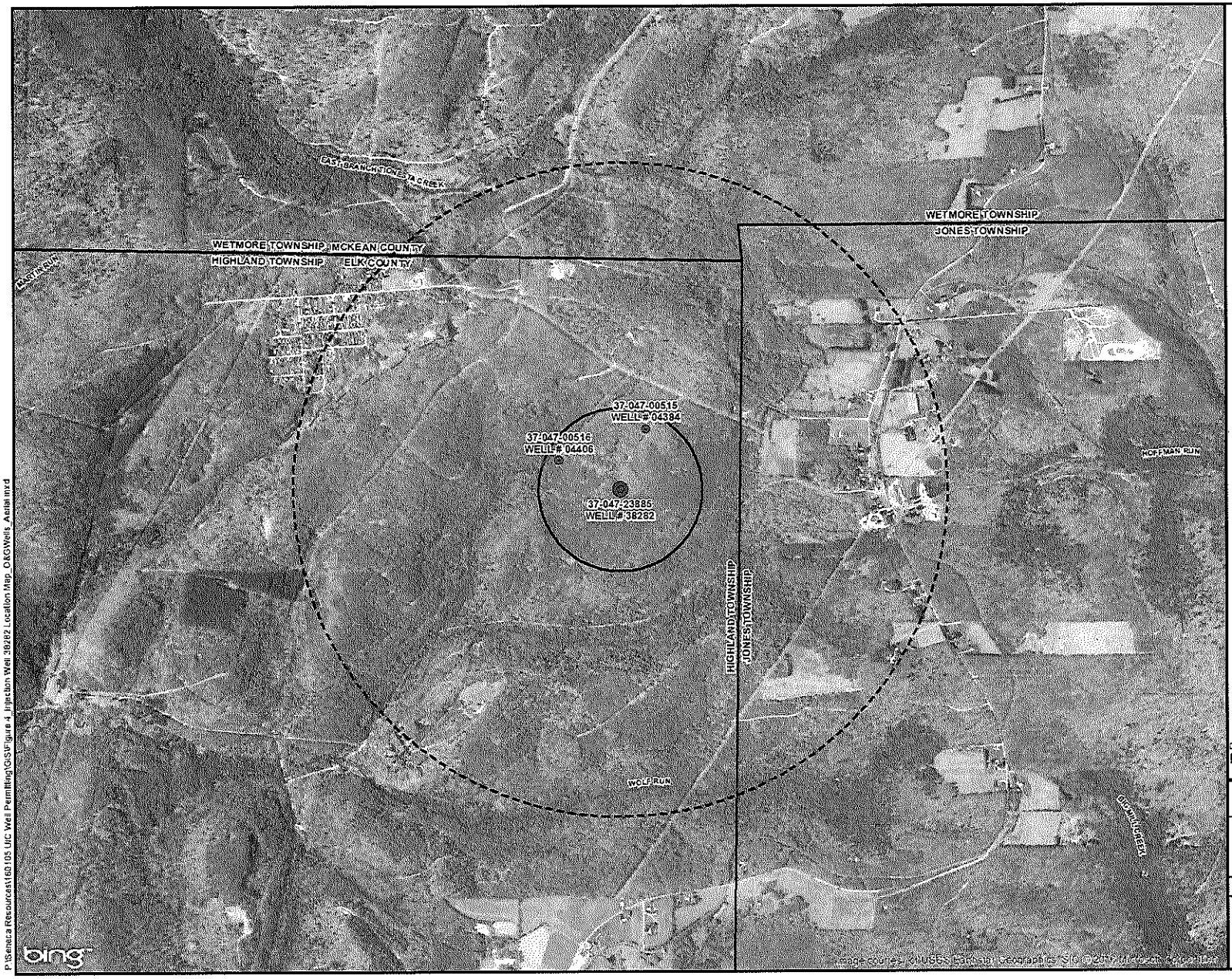

LEGEND

- WELL # 38282
- AREA OF REVIEW (1/4 MILE)
- 1 MILE RADIUS
- OIL AND GAS WELL

REF: Base map from Bing Maps, dated 2011.

0 750 1,500 3,000 4,500

SCALE IN FEET

Location Map (Aerial) with Oil and Gas Wells

Seneca Resources Corporation
Highland, Jones and Wetmore Townships,
McKean and Elk Counties, Pennsylvania

March, 2016	Scale: 1" = 1,500'	160105

ARM Group Inc.
Earth Resource Engineers and Consultants
www.armgroups.net

Figure 4

P:\Seneca Resources\160105 UIC Well Permitting\GIS\Figure 4_Injection Well 38282 Location Map_OKGWells_Aerial.mxd

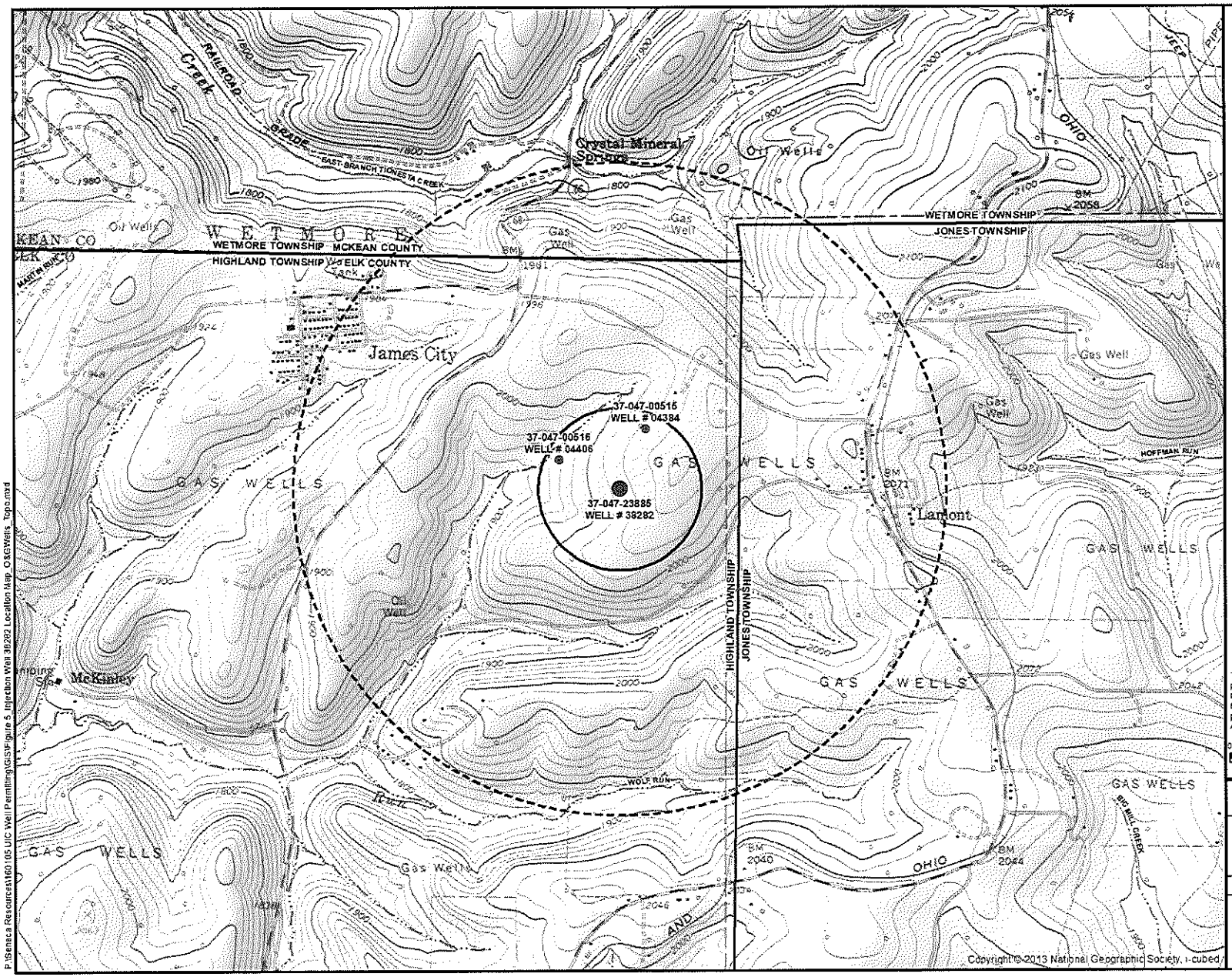

N

LEGEND

- WELL # 38282
- AREA OF REVIEW (1/4 MILE)
- 1 MILE RADIUS
- OIL AND GAS WELL

REF: Base map from ESRI USA Topo Maps. Refer to USGS 7.5 minute Quads Kane and James City, PA.

0 750 1,500 3,000 4,500

SCALE IN FEET

Location Map (Topo) with Oil and Gas Wells

Seneca Resources Corporation
Highland, Jones and Wetmore Townships,
McKean and Elk Counties, Pennsylvania

March, 2016	Scale: 1" = 1,500'	160105

ARM Group Inc.
Earth Resource Engineers and Consultants
www.armgroup.net

Figure 5

P:\Seneca Resources\160105 UIC Well Permitting\GIS\Figure 5_Injection Well 38282 Location Map_OilGWells_Topo.mxd

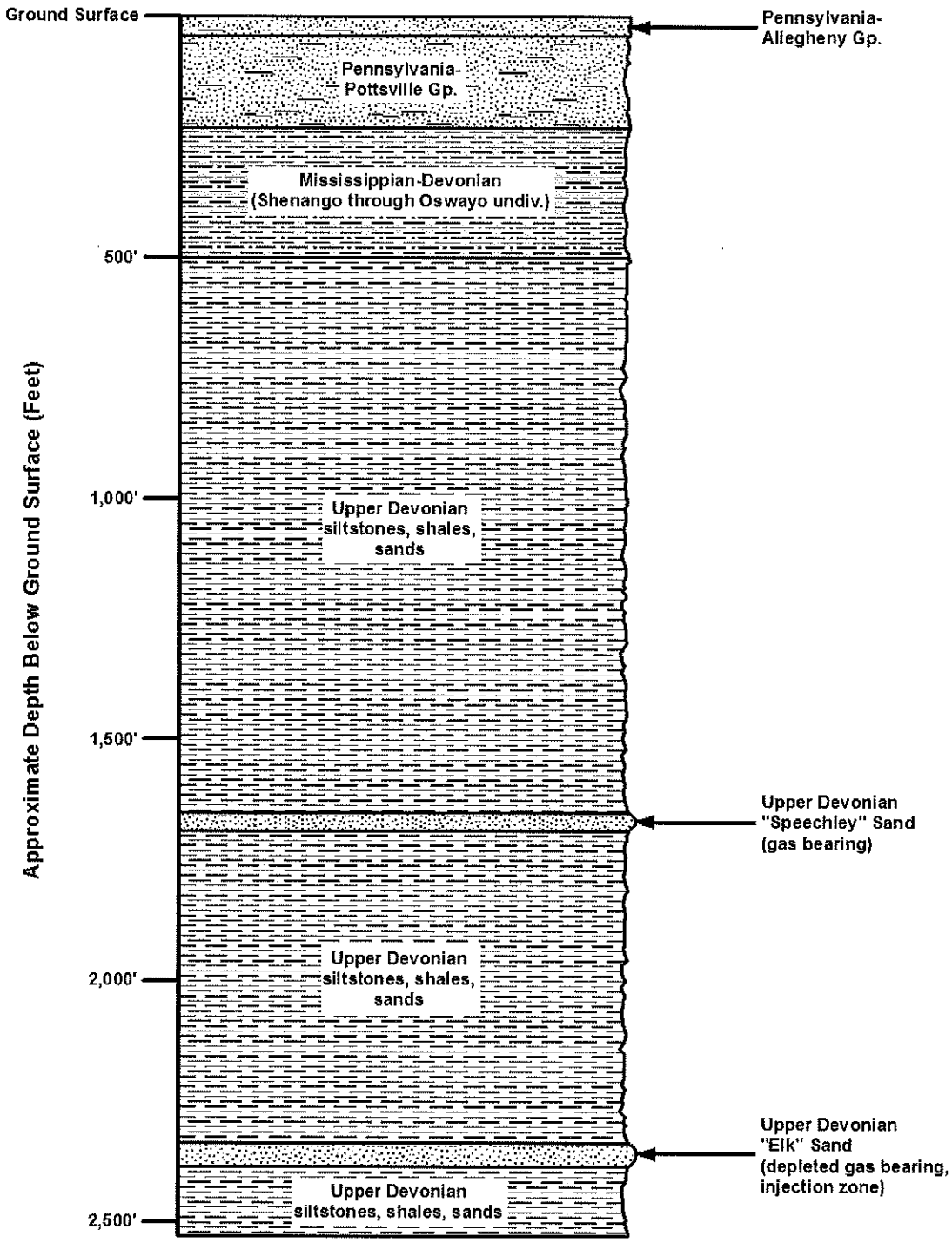

Generalized Geologic Stratigraphic Column

Seneca Resources Corporation
Highland, Jones and Wetmore Townships,
McKean and Elk Counties, Pennsylvania

February, 2016	Not To Scale	160105

ARM Group Inc.
Earth Resource Engineers and Consultants
www.armgroup.net

Figure 6

I:\Seneca Resources\160105 UIC Well Permitting\GIS\Figure 6_Injection Well_Stratigraphic Column.mxd

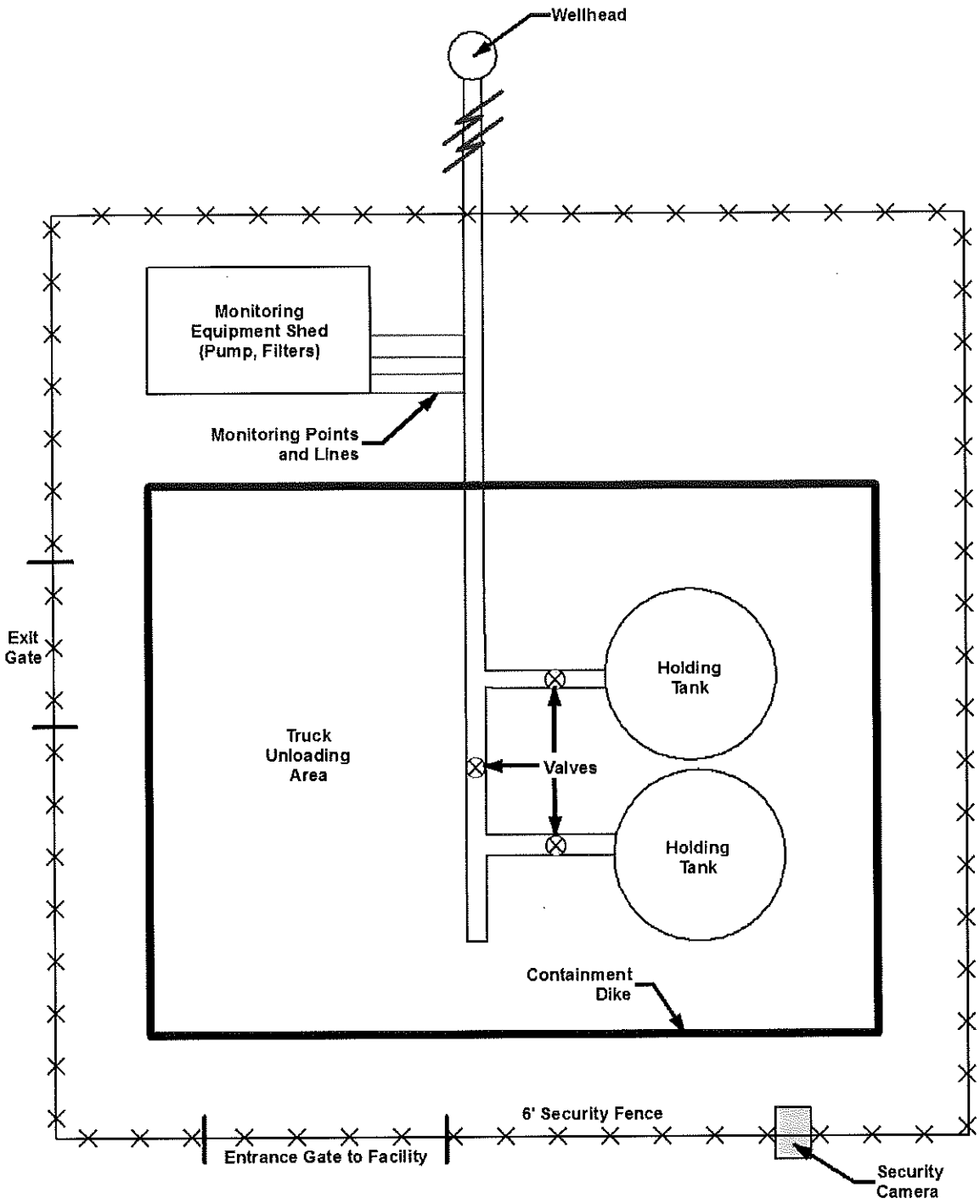

Generalized Injection Well Surface Facility Schematic

Seneca Resources Corporation
Highland, Jones and Wetmore Townships,
McKean and Elk Counties, Pennsylvania

February, 2016	Not To Scale	160105

ARM Group Inc.
Earth Resource Engineers and Consultants
www.armgroup.net

Figure 7

I:\Seneca Resources 5UIC Well Permitting\GIS\Figure 7_Injection Well_Surface Facility Schematic.mxd

Figure 8

Well Construction Diagram
Proposed Injection Well

Seneca Well #38282
Highland Township
Elk County, PA
37-047-32885

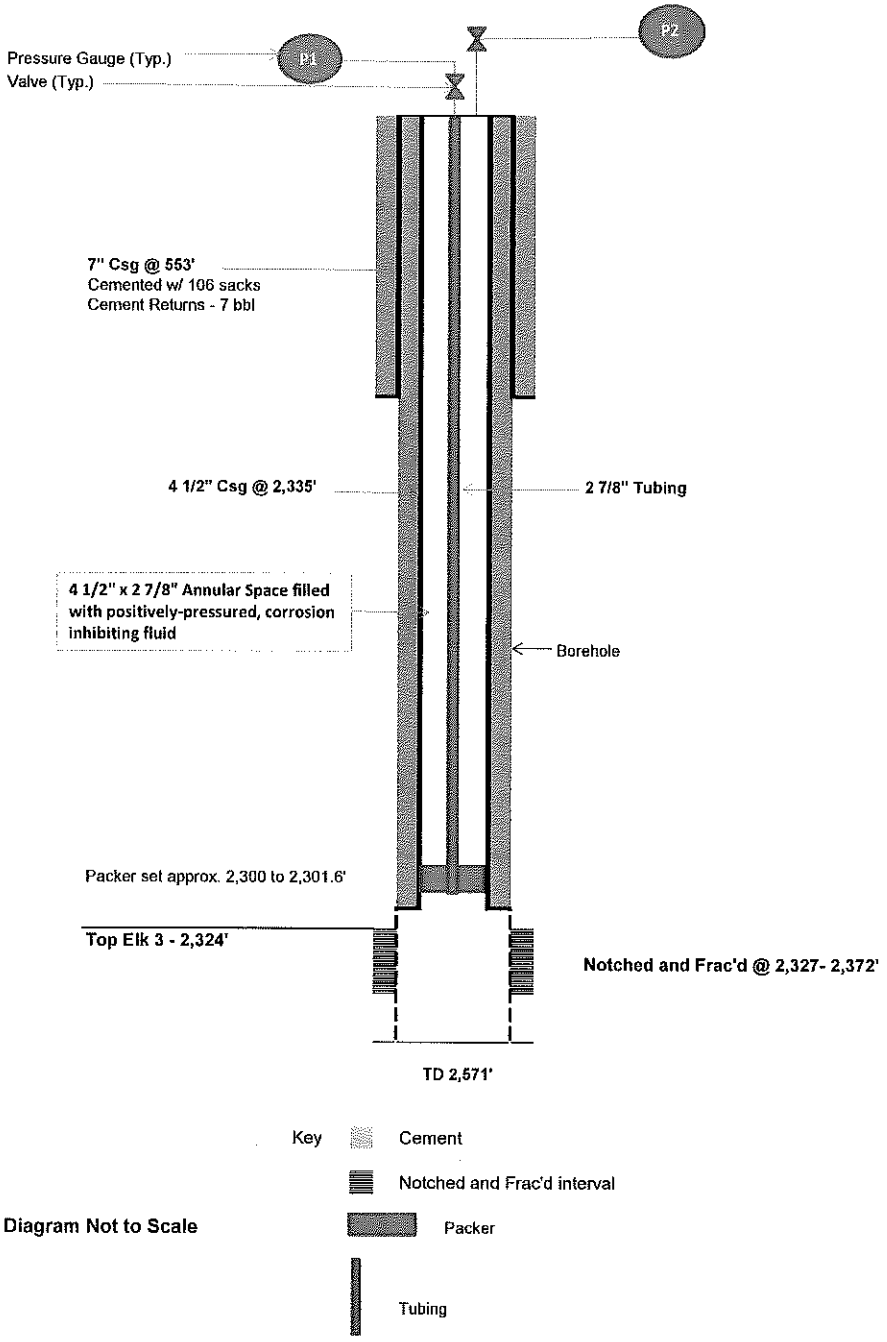

Diagram Not to Scale

Figure 9

Well Construction Diagram

Proposed Monitoring Well

Seneca Well #04406
Highland Township
Elk County, PA

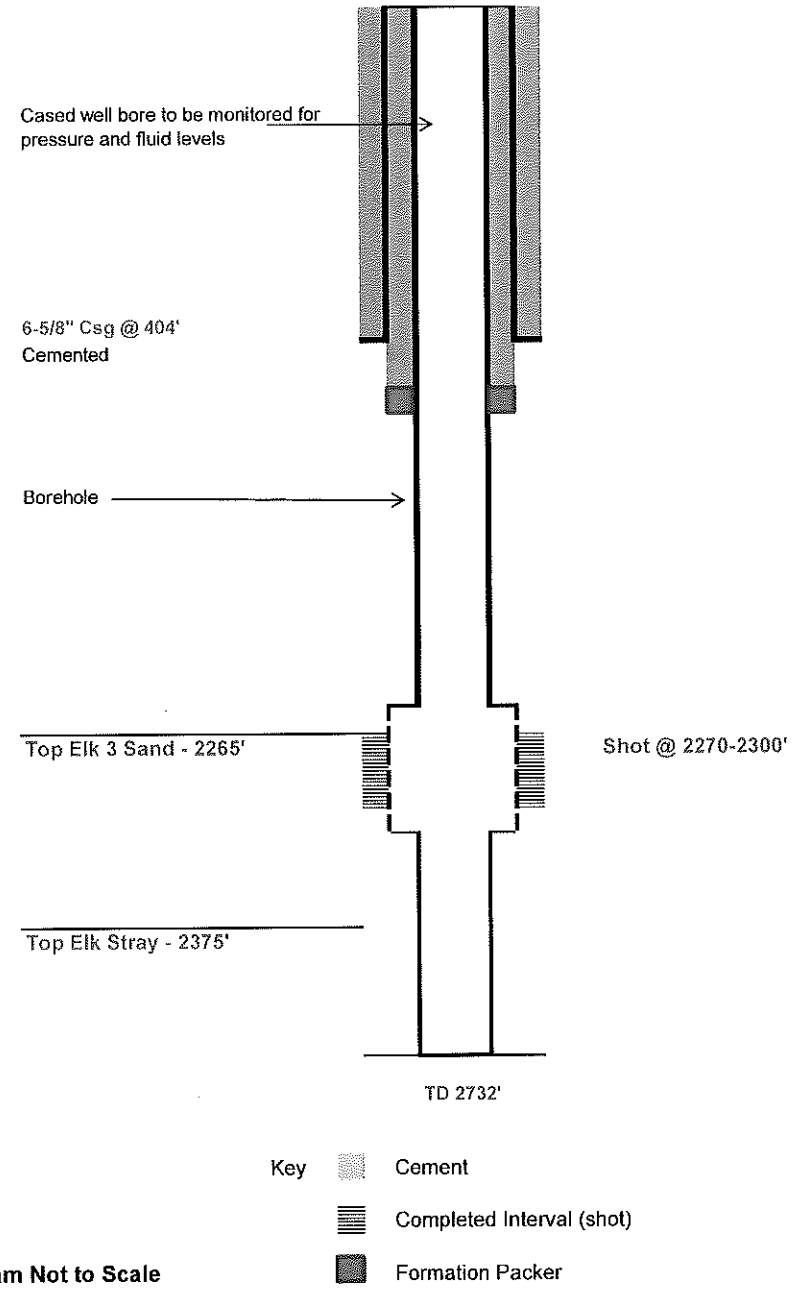

Diagram Not to Scale

1/21/2013, Rev. 8/30/2016

Figure 10

Well Construction Diagram

Proposed Monitoring Well

Seneca Well #04384
Highland Township
Elk County, PA

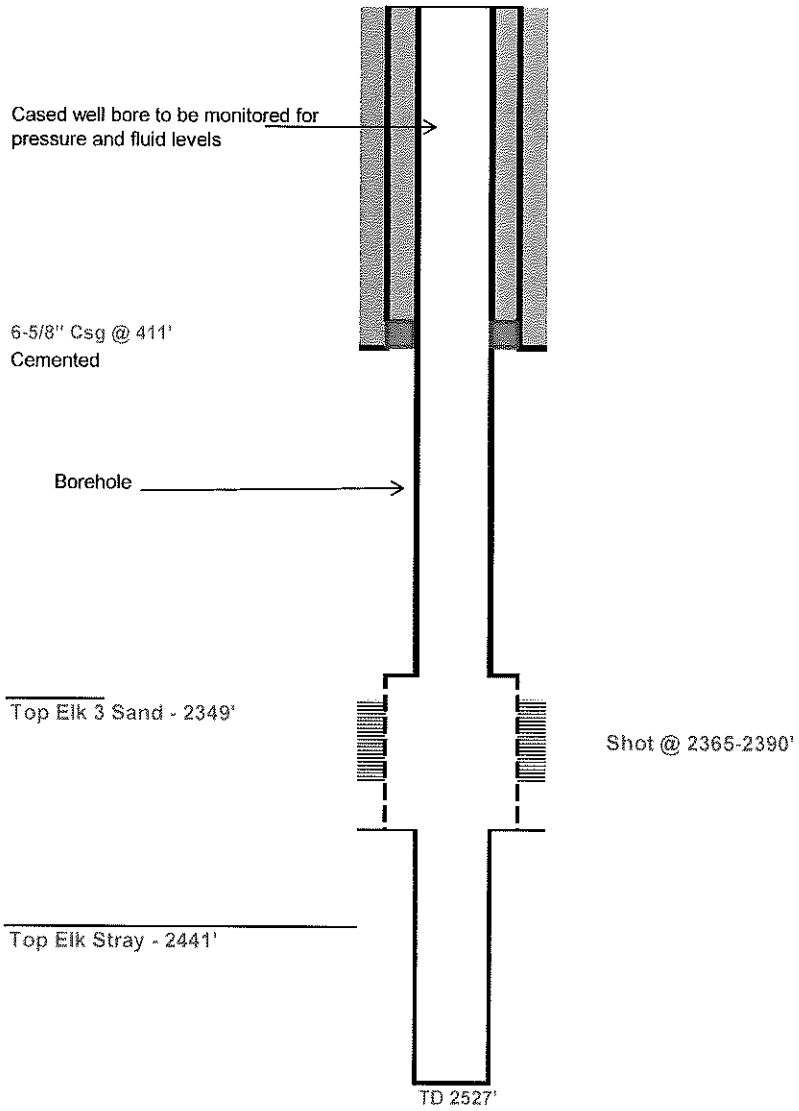

Key
- Cement
- Completed Interval (shot)
- Formation Packer

Diagram Not to Scale
1/21/2013, Rev. 08-30-2016

TABLES

TABLE 1
Oil and Gas Wells Within 1/4 Mile of Proposed Injection Well #38282

Seneca Resources Corporation
Highland Township, Elk County, PA

Operator	Completion Date	API	Well ID	Elevation (ft msl)	Total Depth (ft)	Conductor Casing Depth (ft)	Casing Depth (ft)	Completion	Comments	Distance from #38282 (miles)
Seneca Resources Corp	1/25/2008	37-047-32885	38282	2,030	2,571	40	553	Notched & Frac'd: 2,327-2,372'	Subject of UIC Class IID Permit Application	N/A
Seneca Resources Corp	1/22/2008	37-047-32884	38281	2,020	2,540	47	602	Notched & Frac'd: 2,339-2,390'	Monitoring Well for Well #38268	0.36
Seneca Resources Corp	12/30/1942	Not available	04406	Not available	2,732	35	404	Shot: 2,270 - 2,300	Monitoring Well	0.21
Seneca Resources Corp	11/4/1942	Not available	04384	Not available	2,527	29.5	411	Shot: 2,365 - 2,390	Monitoring Well	0.2

TABLE 2
USDW Within 1 Mile of Proposed Injection Well #38282

Seneca Resources Corporation
Highland Township, Elk County, PA

Springs Within 1 Mile Radius

PA ID	Owner	Comments	Distance from #38282 (feet)
DWRS6240006 Source 1	Highland Township Water Authority	Primary water supply for James City	5,442
DWRS6240006 Source 3	Highland Township Water Authority	Backup water supply for James City; PADEP DWRS notes this source is "abandoned".	5,256

Water Wells Within 1 Mile Radius

PA Well ID	Date Drilled	Owner	Well Depth	Depth to Bedrock (ft)	Well Use	Bore Hole Diameter (in)	Casing Bottom (ft)	Casing Diameter (ft)	Distance from #38282 (feet)
DWRS6240006 Source 4	Not available	Highland Township Water Authority	206	Not available	Municipal Backup	8	30	6 in., pump set at 170 ft.	5,467
DWRS6240006 Source 5	Not available	Highland Township Water Authority	161	Not available	Municipal Backup	8	28	6 in., pump set at 140 ft.	5,186
1000718	8/1/1987	Klaiber, Randy	130	28	Withdrawal	Not available	Not available	Not available	5,314

TABLE 3

Notched and Frac'd Intervals of Injection Well #38282
Seneca Resources Corporation
Highland Township, Elk County, PA

Formation	Notched and Frac'd Interval	Thickness (h)	Comments
Speechley 6	1,644 to 1,655 feet	11 feet	Gas producing interval (Situated above packer)
Tiona 1	1,714 feet	1 foot	Gas producing interval (Situated above packer)
Tiona	1,722 feet	1 foot	Gas producing interval (Situated above packer)
Cooper 6	1,907 feet	1 foot	Gas producing interval (Situated above packer)
Cooper 6	1,930 feet	1 foot	Gas producing interval (Situated above packer)
Kane 3	2,117 feet	1 foot	Gas producing interval (Situated above packer)
Elk 3	2,327 to 2,372 feet	45 feet	Gas producing interval (Injection Interval)

TABLE 4

Notched and Frac'd Intervals of Injection Well #04406
Seneca Resources Corporation
Highland Township, Elk County, PA

Formation	Notched and Frac'd Interval	Thickness (h)	Comments
Clarendon Sand	Noted to be present from 1,582 to 1,591 feet	No Frac	Gas producing interval
Cooper	Noted to be present from 2,045 to 2,056 feet	No Frac	Gas producing interval
Bradford Sand	Noted to be present from 2,172 to 2,232 feet	No Frac	No gas or water
Elk 3	Shot: 2,270 to 2,300	30 feet	Gas producing interval
Elk Stray	Noted to be present from 2,375 to 2,401 feet	No Frac	No water or gas reported from Elk Sand

TABLE 5

Notched and Frac'd Intervals of Injection Well #04384
Seneca Resources Corporation
Highland Township, Elk County, PA

Formation	Notched and Frac'd Interval	Thickness (h)	Comments
Clarendon Sand	Noted to be present from 1,666 to 1,682 feet	No Frac	Gas producing interval
Bradford Sand	Noted to be present from 2,275 to 2,321 feet	No Frac	Gas producing interval
Elk 3	Shot: 2,365 to 2,390	25 feet	Gas producing interval
Elk Stray	Noted to be present from 2,441 to 2,449 feet	No Frac	Gas producing interval

APPENDICES

APPENDIX A

Additional Requested Information Associated with the Depletion of the Elk 3 Gas Producing Reservoir

SENECA RESOURCES

June 13, 2013

Mr. Roger Reinhart
Groundwater and Enforcement Branch (3WP22)
Office of Drinking Water & Source Protection
United States Environmental Protection Agency Region 3
1650 Arch Street
Philadelphia, PA 19103-2029

Re: Response to Request for Additional Information dated May 8, 2013
Underground Injection Control (UIC) Program
Class IID Injection Well #38268 (API No. 37-047-23835)

Dear Mr. Reinhart:

Seneca Resources Corporation (Seneca) received an e-mail on May 8, 2013 following up on a verbal request for additional information to support our application for a brine disposal injection well (Class IID) in Highland Township, Elk County, Pennsylvania (Permit ID: PAS2D025BELK). In the phone call and subsequent e-mail US EPA Region 3 requested information regarding reservoir pressures in the Elk 3 reservoir as well as any available production information to support our statement that the Elk 3 reservoir is depleted.

Seneca was able to locate reservoir pressure and production histories for several wells near the subject well (Attachment 1). As depicted in the attached graph (Attachment 2), initial reservoir pressures of 425-440 pounds per square inch (psi) were documented when the reservoir was first produced in 1898. Over time, reservoir pressure decreased as production continued. In June 2013, Seneca shut in the subject well and others around it to record current reservoir pressures. The subject well had a shut-in casing pressure of 26.6 psi and nearby wells had pressures ranging from 20.6 psi to 54.3 psi.

The Elk 3 has been a substantial gas-producing reservoir. Estimated cumulative production from selected wells near 38268 is summarized in the attached table (Attachment 3).

The Elk 3 Sandstone is a depleted reservoir, as evidenced by the reservoir pressure decline curves and significant volumes of gas produced since 1898.

Should you have any questions or concerns, or need additional information, please contact Amanda Veazey at (412) 548-2533 or me at (412) 548-2513.

Sincerely,

Doug Kepler
Vice President, Environmental Engineering

5800 CORPORATE DRIVE • SUITE 300 • McCANDLESS CORPORATE CENTER • PITTSBURGH, PA 15237
P 412.548.2500 • F 412.358.0125

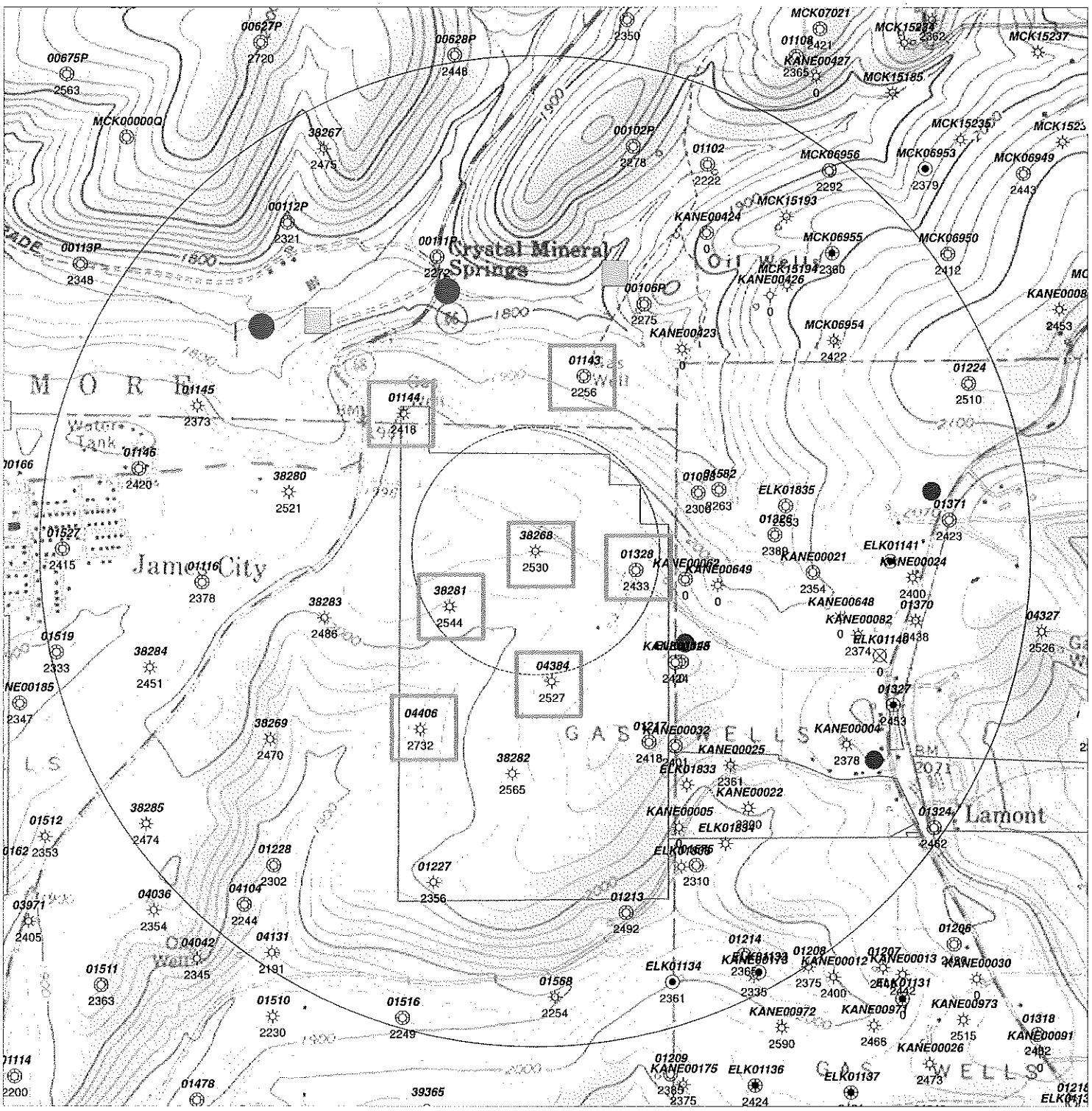

15 minute topographic quadrangle maps:
Kane, PA
James City, PA

Private Water Wells
Straight hole well
● Straight hole well

Highland Township Water Authority
Point
TYPE
▨ SPRING
● WATER WELL

☐ Wells with historic pressure and/or production data

SENECA
RESOURCES

Seneca Well 38268
Known Gas Wells within ¼ mile
Known Water Wells/Supplies within 1 mile

Author:		Date:
Amanda Veazey		June 13, 2013
	Scale: See Scale Bar	

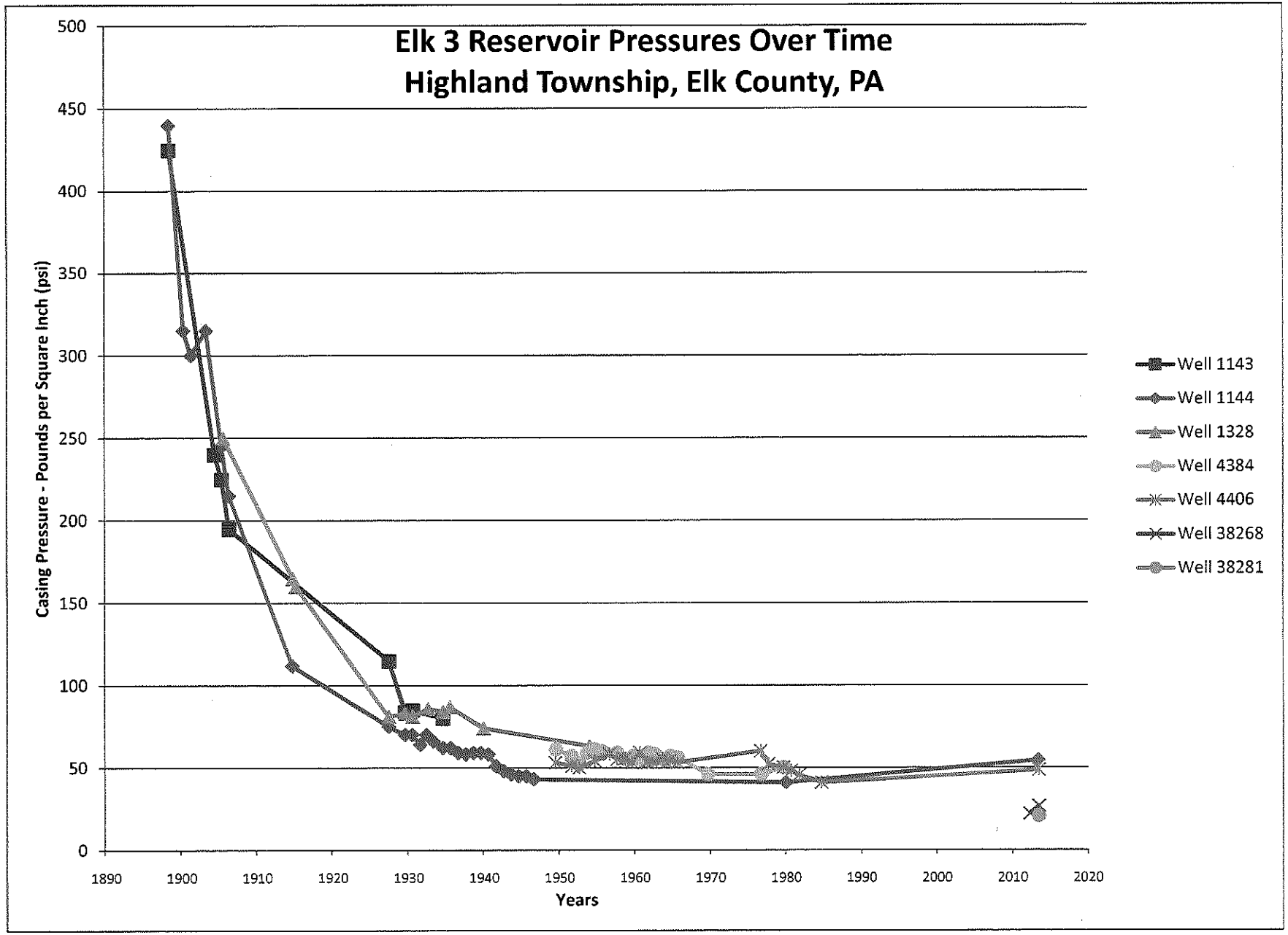
Elk 3 Reservoir Pressures Over Time
Highland Township, Elk County, PA
Casing Pressure - Pounds per Square Inch (psi)
500
450
400
350
300
250
200
150
100
50
0
1890
1900
1910
1920
1930
1940
1950
1960
1970
1980
1990
2000
2010
2020
Years
Well 1143
Well 1144
Well 1328
Well 4384
Well 4406
Well 38268
Well 38281

Attachment 3

Estimated Cumulative Gas Production For Selected Wells Near Seneca Well #38268

Well #	Year Drilled	Year Plugged & Abandoned	Estimated Cumulative Production (MMCF)
1143	1898	1949	280
1144	1898		422
1328	1902	1991	412
4406	1943		150
38268	2007		82*

* Well 38268 was completed open-hole in both the Elk 3 and Speechley 6 reservoirs. Production is commingled. Estimated Ultimate Recovery for this well is 135 MMCF.

APPENDIX B

Area of Review/Zone of Endangerment Analysis for Potential Brine Disposal Injection Well #38268

TETRA TECH

21335 Signal Hill Plaza, Suite 100, Sterling, VA 20164 703-444-7000 703-444-1685 (FAX)

TECHNICAL MEMORANDUM - DRAFT

TO: Dale Skoff, Tetra Tech NUS

FROM: Jeffrey Benegar

DATE: June 14, 2012

RE: Area of Review/Zone of Endangerment Analysis for Potential Brine Disposal Injection Well #38268

EXECUTIVE SUMMARY

This technical memorandum (TM) summarizes the analytical modeling we have performed for the area of review/zone of endangerment analysis for potential brine disposal injection well #38268 for Seneca Resources. Well #38268 is located in Highland Township, Elk County, PA. Brine disposal via injection well would take place into the Elk 3 Sandstone. Our analysis is described in more detail below.

OVERVIEW AND METHODOLOGY

There are several methods proposed for calculating the zone of endangerment of an injection well. The most simplistic method is the use of a fixed radius, based on the type of injection well being permitted. Other methods involve calculation of the radius based on well and formation properties. The method used here is the graphical method first used by US EPA Region 6. It involves the calculation of the increase of pressure in the formation due to injection, then converting that pressure into equivalent feet of head. The increase in head in the formation due to injection is then compared to the equivalent head of the lowest most underground source of drinking water (USDW). When plotted graphically, the intersection of those two curves at some distance, r, determines the radius of the zone of endangerment.

The increase in pressure in the formation due to injection depends on the properties of the injection fluid and the formation, the rate of fluid injection, and the length of time of injection. The most common mathematical expression to describe this increase in pressure was developed by Matthews and Russell (1967). Matthews and Russell assume that, for a single well injecting into an infinite, homogeneous and isotropic, non-leaking formation, the increase in pressure (delta p) can be described as:

delta p = 162.6 $Q\mu$ / kh * [(log(kt / $\Phi\mu Cr^2$) – 3.23] where:

delta p = pressure change (psi) at radius, r and time, t
Q = injection rate (barrels/day)
μ = injectate viscosity (centipoise)
k = formation permeability (millidarcies)
h = formation thickness (feet)
t = time since injection began (hours)
C = compressibility (total, sum of water and rock compressibility) (psi^{-1})
r = radial distance from wellbore to point of investigation (feet)
Φ = average formation porosity (decimal)

PARAMETERS USED IN THE ANALYSIS

The following parameters were used in the zone of endangerment analysis. The majority of the parameters are based on the analysis and results of the injection testing performed on well #38268 in March 2012 (Tetra Tech, 2012). The permeability value was based on the results from the injection testing analysis. For the depth to the lowest most USDW, a conservative estimate based on US EPA Region 3 guidance and review of site area hydrogeologic conditions was used (i.e., depth to USDW = 400 feet)

<u>Input Parameters for Well #38268</u>
Q = 3,000 barrels/day
t = 10 years = 87,600 hours
μ = 0.9457 centipoise
k = 190 md
h = 49 feet
C = 7.6e-06 psi^{-1}
Φ = 13.5%
Well radius = 0.29 feet
Specific gravity of injectate = 1.14
Surface elevation = 2040 feet
Depth to injection formation = 2354 feet
Base of lowest most USDW (elevation) = 1640 feet
Initial pressure at top of injection formation = 24 psi

RESULTS

The Matthews and Russell equation was solved for various distances from the wellbore based on the parameters listed above for permeability value determined from the injection test. The values of delta p were added to the existing pressure in the injection formation to obtain the total pressure in the formation. These values were then converted to feet of head of formation brine. The results are shown in Figure 1. The plot shows the calculated pressure surface within the injection formation, measured as feet of head of formation brine above the top of the injection formation. Also shown is the head of the

lowest most USDW. Where the two lines intersect, the radius of the zone of endangerment can be estimated. For the permeability value of k = 190 md, the increase in head due to injection would remain below the elevation of the lowest most USDW. This permeability value was obtained from injection testing analysis of well #38268.

CONCLUSIONS

Our analysis of the area of review/zone of endangerment for the proposed brine disposal injection wells is based on a methodology typically used by US EPA. For the permeability value of k = 190 md (obtained from injection testing analysis of well #38268), increase in head due to injection would remain below the elevation of the lowest most USDW. Based on the results, we believe the well is an excellent candidate for use as a brine disposal well.

In summary, the default area of review of a ¼ mile radius from the proposed injection well is applicable for this application.

REFERENCES

Matthews, C.S., Russell, D.G., (1967) Pressure Buildup and Flow Tests in Wells, SPE Monograph Series, Volume 1, New York.

Tetra Tech, (2012) Injectivity Test Report, Seneca Resources Well #38268, Highland Township, Elk County, PA. May 2012.

FIGURES

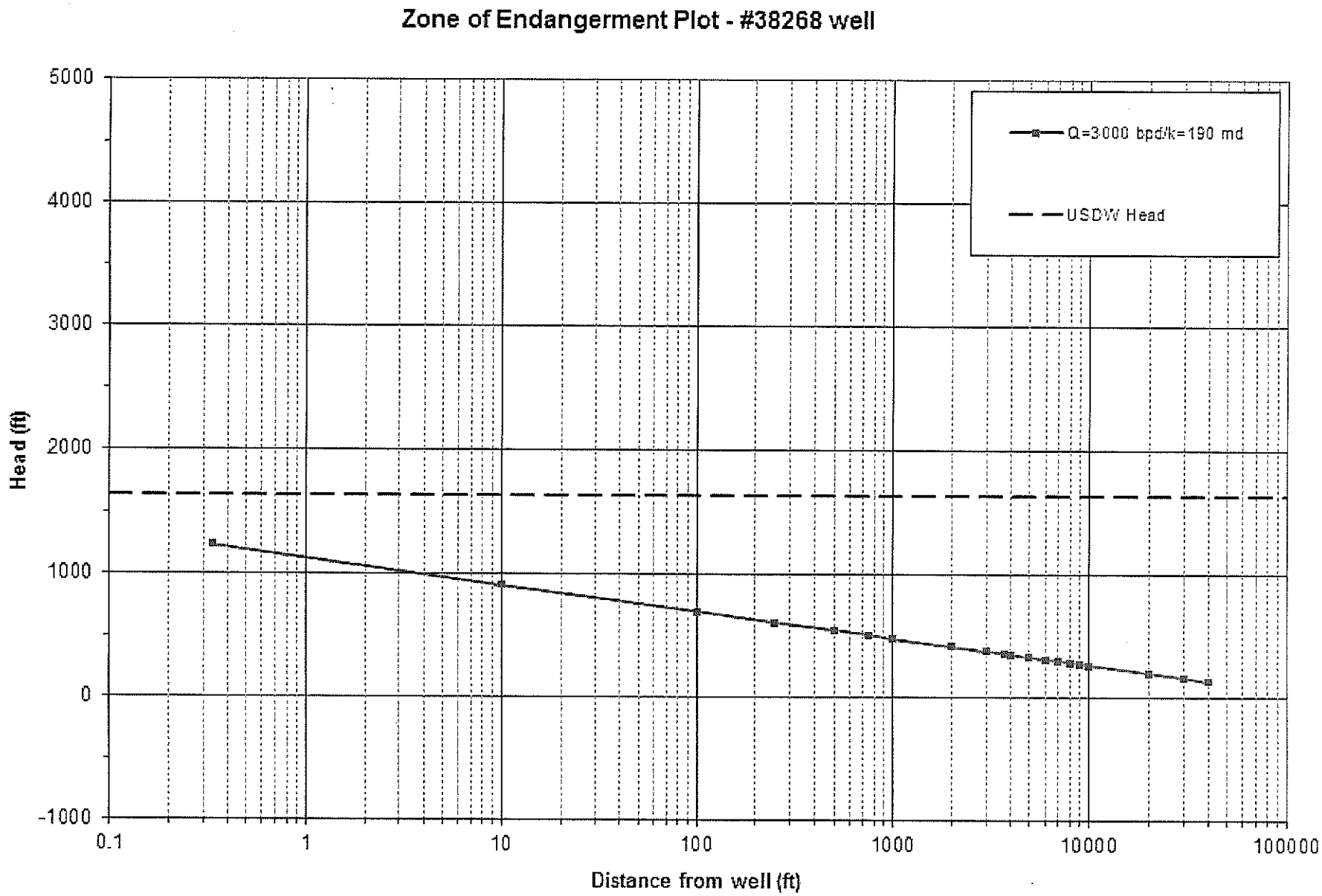

Figure 1. Feet of head of injection formation and USDW vs. distance from the well for #38268 well

TETRA TECH, INC.

APPENDIX C

Tetra Tech, (2012) Injectivity Test Report, Seneca Resources Well #38268, Highland Township, Elk County, PA. May 2012