SCS ENGINEERS

MAJOR PERMIT MODIFICATION
Greater Lebanon Refuse Authority
Phase II Expansion Permit Modification
PADEP Permit No. 101544

VOLUME 2 of 3

Prepared for:

Greater Lebanon Refuse Authority
1610 Russell Road
Lebanon, Pennsylvania 17046

Prepared by:

SCS ENGINEERS
22 Denver Road
Suite E
Denver, Pennsylvania 17517
610.382.3050

July 2018

File No. 02215800.05

Offices Nationwide
www.scsengineers.com

MAJOR PERMIT MODIFICATION

GREATER LEBANON REFUSE AUTHORITY
Phase II Expansion Permit Modification
PADEP Permit No. 101544

VOLUME 2 of 3

Prepared for:

GREATER LEBANON REFUSE AUTHORITY
1610 Russell Road
Lebanon, Pennsylvania 17046

Prepared by:

SCS ENGINEERS
22 Denver Road
Suite E
Denver, Pennsylvania 17517
610.382.3050

July 2018

File No. 02215800.05

Table of Contents

Volume 1

Form G (A), Air Resources Protection - Dust Emissions Estimate and Control Plan
Form G(A) Narrative
Form G(A) Calculations

Form G (B), Air Resources Protection - NMOC Emissions Estimate and Control Plan
Form G(B) Narrative
Table 1 – LFG Modeling Results – Existing Landfill
Table 2 – LFG Modeling Results – Expansion
Table 3 – LFG Modeling Results – Existing and Expansion
Table 4 - Estimated HAP Emissions

Form H, Revegetation
Form H Narrative

Form I, Soil Erosion and Sedimentation Controls
Form I Narrative
Section C – Diversion Controls
Section E – Sedimentation Ponds
Section F – Stormwater

Form J, Soils Information – Phase II
Construction Quality Assurance Plan
Attachment A – Terms and Abbreviations
Attachment B – Technical Specifications

Form K, Gas Management
Form K Narrative

Form L, Contingency Plan for Emergency Procedures
Preparedness Prevention and Contingency Plan

Form Q, Request for Equivalency Review
Form Q – Use of Geocomposite Drainage Net in Detection Zone
Form Q – Bench Spacing and Width
Form Q – Use of Geosynthetic Clay Liner as Subbase

Volume 2

Form 3, Map Requirements – Phase II

Volume 3

Form 14, Operation Plan – Phase II
Form 14 Narrative
Attachment A – Operations Plan

Form 18, Water Quality Monitoring System – Phase II
Form 18 Narrative
Water Quality Monitoring System Plan

Form 24, Liner System – Phase II
Form 24 Narrative
Attachment 24-A – Slope Stability Analysis
Attachment 24-B – Calculations
Attachment 24-C – Settlement Accommodation Plan

Form 25, Leachate Management – Phase II
Form 25 Narrative
Attachment A – HELP Model
Attachment B – Calculations

Form 28, Closure/Post – Closure Land Use Plan
Form 28 Narrative
Attachment A – Bonding Worksheets for Landfills and Disposal Impoundments

Form 45, Protection of Capacity

Form 3
Map Requirements

GREATER LEBANON REFUSE AUTHORITY
HEILMANDALE EXPANSION
PHASE II PERMIT MODIFICATION
PERMIT NO. 101544

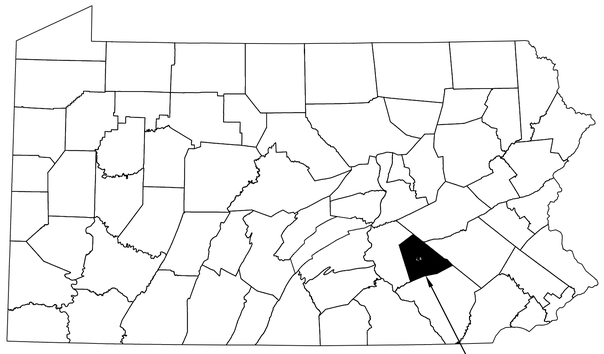

PENNSYLVANIA

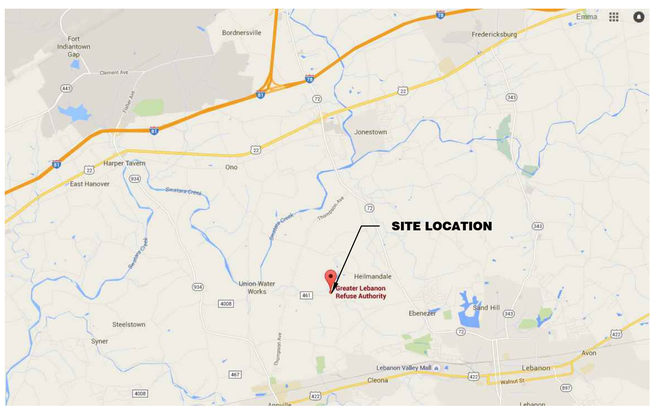

SITE LOCATION MAP

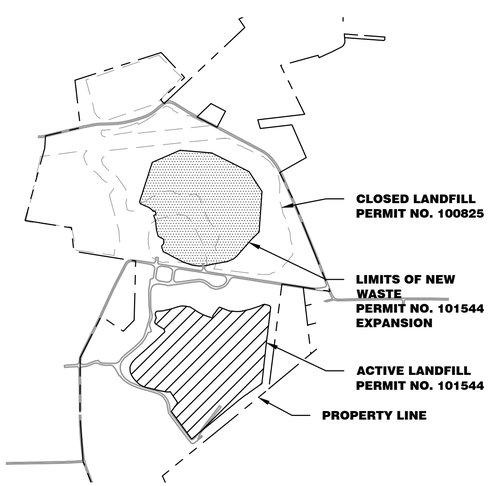

AREA MAP

SCALE: 1"=1,000'

GREATER LEBANON REFUSE AUTHORITY

1610 RUSSELL ROAD
LEBANON, PENNSYLVANIA 17046

SCS ENGINEERS

22 DENVER ROAD
SUITE E
DENVER, PENNSYLVANIA 17517
(610) 382-3050

PROJECT NO. 02215800.05

JULY 2018

REFERENCE SYMBOLS

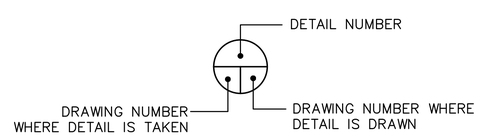

INDEX OF DRAWINGS

DRAWING NO.	DRAWING TITLE
1	TITLE SHEET
2	OVERALL SITE KEY MAP (WITH SURVEY CONTROL)
3	EXISTING CONDITIONS I
4	EXISTING CONDITIONS II
5	OVERALL EXCAVATION GRADE PLAN
6	OVERALL TOP OF LEACHATE COLLECTION LAYER PLAN
7	OVERALL FINAL COVER GRADE PLAN
8	SITE MONITORING PLAN WITH GROUNDWATER CONTOURS
9	PHASING PLAN – PAD 8
10	PHASING PLAN – PAD 9
11	PHASING PLAN – PAD 10
12	PHASING PLAN – PAD 11
12	PHASING PLAN – PAD 12
14	PHASING PLAN – PAD 13
15	LANDFILL CROSS SECTIONS I
16	LANDFILL CROSS SECTIONS II
17	LANDFILL CROSS SECTIONS III
18	LINER SYSTEM DETAILS
19	PERIMETER ROAD PROFILE
20	PERIMETER AND LANDFILL ACCESS ROAD PROFILE
21	PERIMETER & HAUL ROAD DETAILS
22	LEACHATE COLLECTION/DETECTION SYSTEM PLAN
23	LEACHATE COLLECTION SYSTEM DETAILS
24	LEACHATE COLLECTION SUMP PLAN
25	LEACHATE SUMP SECTIONS I
26	LEACHATE SUMP SECTIONS II
27	LEACHATE AND LANDFILL GAS TRANSMISSION PLAN
28	LANDFILL GAS DECOMMISSIONING PLAN
29	LANDFILL GAS SYSTEM PLAN
30	LANDFILL GAS SYSTEM PLAN FOR OLD WASTE
31	LANDFILL GAS DETAILS I
32	LANDFILL GAS DETAILS II
33	OVERALL STORMWATER MANAGEMENT PLAN
34	STORMWATER DETAILS I
35	STORMWATER DETAILS II
36	EROSION AND SEDIMENT CONTROL DETAILS

COMMONWEALTH OF PENNSYLVANIA
REGISTERED PROFESSIONAL
DENISE WESSELS
ENGINEER

NO.	REVISION	DATE

SHEET TITLE: TITLE SHEET

PROJECT TITLE: HEILMANDALE EXPANSION PHASE II PERMIT MODIFICATION

CLIENT: GREATER LEBANON REFUSE AUTHORITY
1610 RUSSELL ROAD
LEBANON, PENNSYLVANIA 17046

SCS ENGINEERS
STEARNS, CONRAD AND SCHMIDT CONSULTING ENGINEERS, INC.
22 DENVER ROAD; SUITE E - DENVER, PA 17517
PH. (610) 382-3050 SCSENGINEERS.COM

PROJ. NO. 02215800.05 | DWN. BY: SRS | Q/A RVW BY: DW
DSN. BY: ERS | CHK. BY: DW | APP. BY: DW

CADD FILE: SHT-01

DATE: JULY 2018

SCALE:

DRAWING NO. 1 of 36

M:\02215800.05 GLRA\DESIGN\SHT-01 TITLE SHEET.DWG layout: SHT-01 plotted on: 7/18/2018 1:38 PM Sullivan, Sean

CONTROL POINTS				
POINT #	NORTHING	EASTING	ELEV	DESCRIPTION
1	380,547.426	2,319,273.239	468.07	CONCRETE MONUMENT #119
2	380,163.600	2,319,453.61	464.55	NOTCH IN CONCRETE STEP
3	380,136.607	2,321,431.707	509.65	CONCRETE MONUMENT #101
4	378,617.065	2,318,664.497	447.07	CONCRETE MONUMENT #213
5	378,878.209	2,318,639.705	450.29	CONCRETE MONUMENT #148

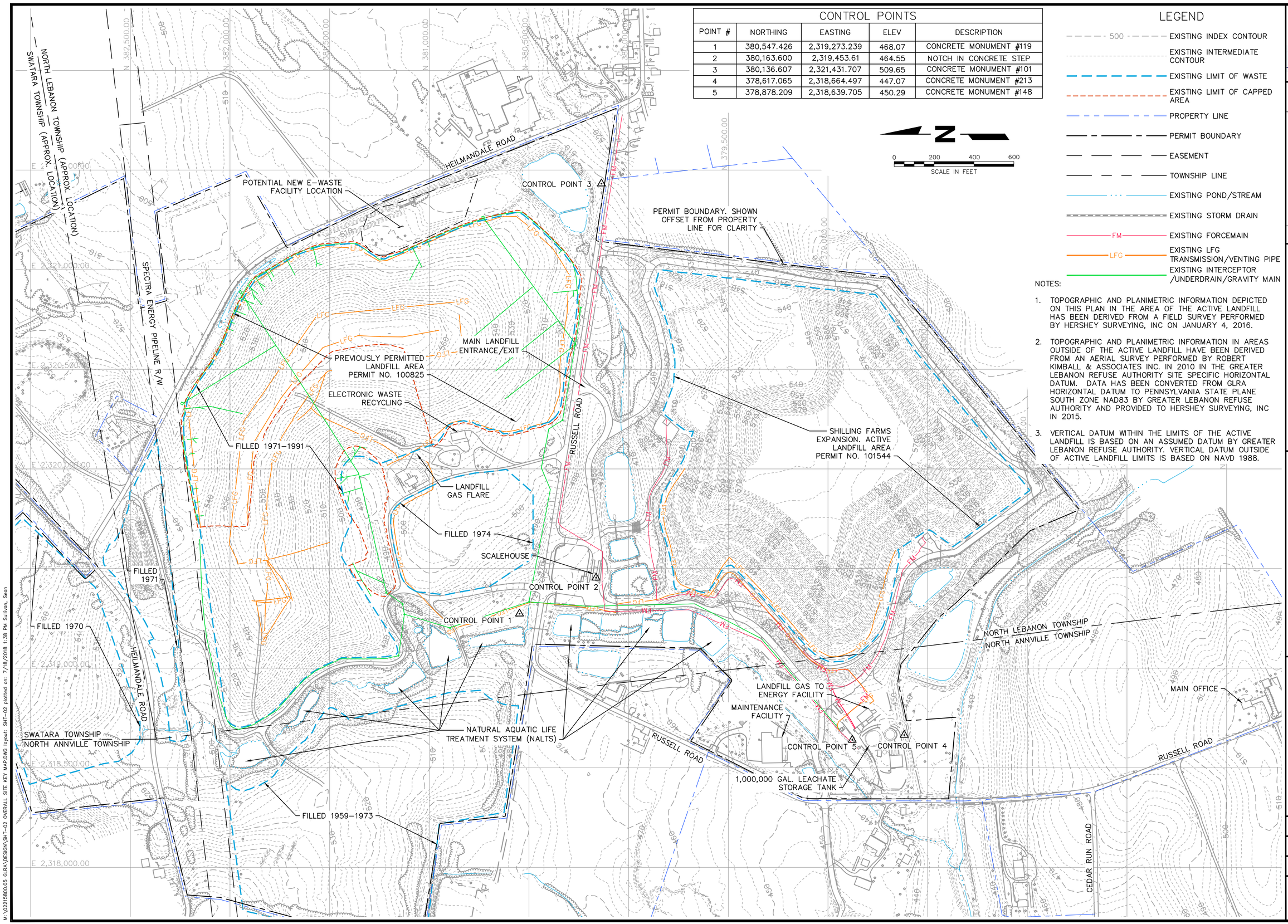

LEGEND

- 500 — EXISTING INDEX CONTOUR
- EXISTING INTERMEDIATE CONTOUR
- EXISTING LIMIT OF WASTE
- EXISTING LIMIT OF CAPPED AREA
- PROPERTY LINE
- PERMIT BOUNDARY
- EASEMENT
- TOWNSHIP LINE
- EXISTING POND/STREAM
- EXISTING STORM DRAIN
- FM — EXISTING FORCEMAIN
- LFG — EXISTING LFG TRANSMISSION/VENTING PIPE
- EXISTING INTERCEPTOR /UNDERDRAIN/GRAVITY MAIN

NOTES:

1. TOPOGRAPHIC AND PLANIMETRIC INFORMATION DEPICTED ON THIS PLAN IN THE AREA OF THE ACTIVE LANDFILL HAS BEEN DERIVED FROM A FIELD SURVEY PERFORMED BY HERSHEY SURVEYING, INC ON JANUARY 4, 2016.
2. TOPOGRAPHIC AND PLANIMETRIC INFORMATION IN AREAS OUTSIDE OF THE ACTIVE LANDFILL HAVE BEEN DERIVED FROM AN AERIAL SURVEY PERFORMED BY ROBERT KIMBALL & ASSOCIATES INC. IN 2010 IN THE GREATER LEBANON REFUSE AUTHORITY SITE SPECIFIC HORIZONTAL DATUM. DATA HAS BEEN CONVERTED FROM GLRA HORIZONTAL DATUM TO PENNSYLVANIA STATE PLANE SOUTH ZONE NAD83 BY GREATER LEBANON REFUSE AUTHORITY AND PROVIDED TO HERSHEY SURVEYING, INC IN 2015.
3. VERTICAL DATUM WITHIN THE LIMITS OF THE ACTIVE LANDFILL IS BASED ON AN ASSUMED DATUM BY GREATER LEBANON REFUSE AUTHORITY. VERTICAL DATUM OUTSIDE OF ACTIVE LANDFILL LIMITS IS BASED ON NAVD 1988.

COMMONWEALTH OF PENNSYLVANIA
REGISTERED PROFESSIONAL ENGINEER
DENISE WESSELS

NO.	REVISION	DATE

SHEET TITLE: **OVERALL SITE KEY MAP**

PROJECT TITLE: **HEILMANDALE EXPANSION PHASE II PERMIT MODIFICATION**

CLIENT: **GREATER LEBANON REFUSE AUTHORITY**
1610 RUSSELL ROAD
LEBANON, PENNSYLVANIA 17046

SCS ENGINEERS
STEARNS, CONRAD AND SCHMIDT CONSULTING ENGINEERS, INC.
22 DENVER ROAD; SUITE E - DENVER, PA 17517
PH. (610) 382-2050 SCSENGINEERS.COM

PROJ. NO. 02215800.05 | DWN. BY: SRS | Q/A RVW BY: DW
DSN. BY: ERS | CHK. BY: DW | APP. BY: DW

CADD FILE: SHT-02

DATE: JULY 2018

SCALE: 1"=200'

DRAWING NO. **2** of **36**

M:\02215800.05 GLRA\DESIGN\SHT-02 OVERALL SITE KEY MAP.DWG layout: SHT-02 plotted on: 7/18/2018 1:38 PM Sullivan, Sean

SEE MATCHLINE A-A ON SHEET 4

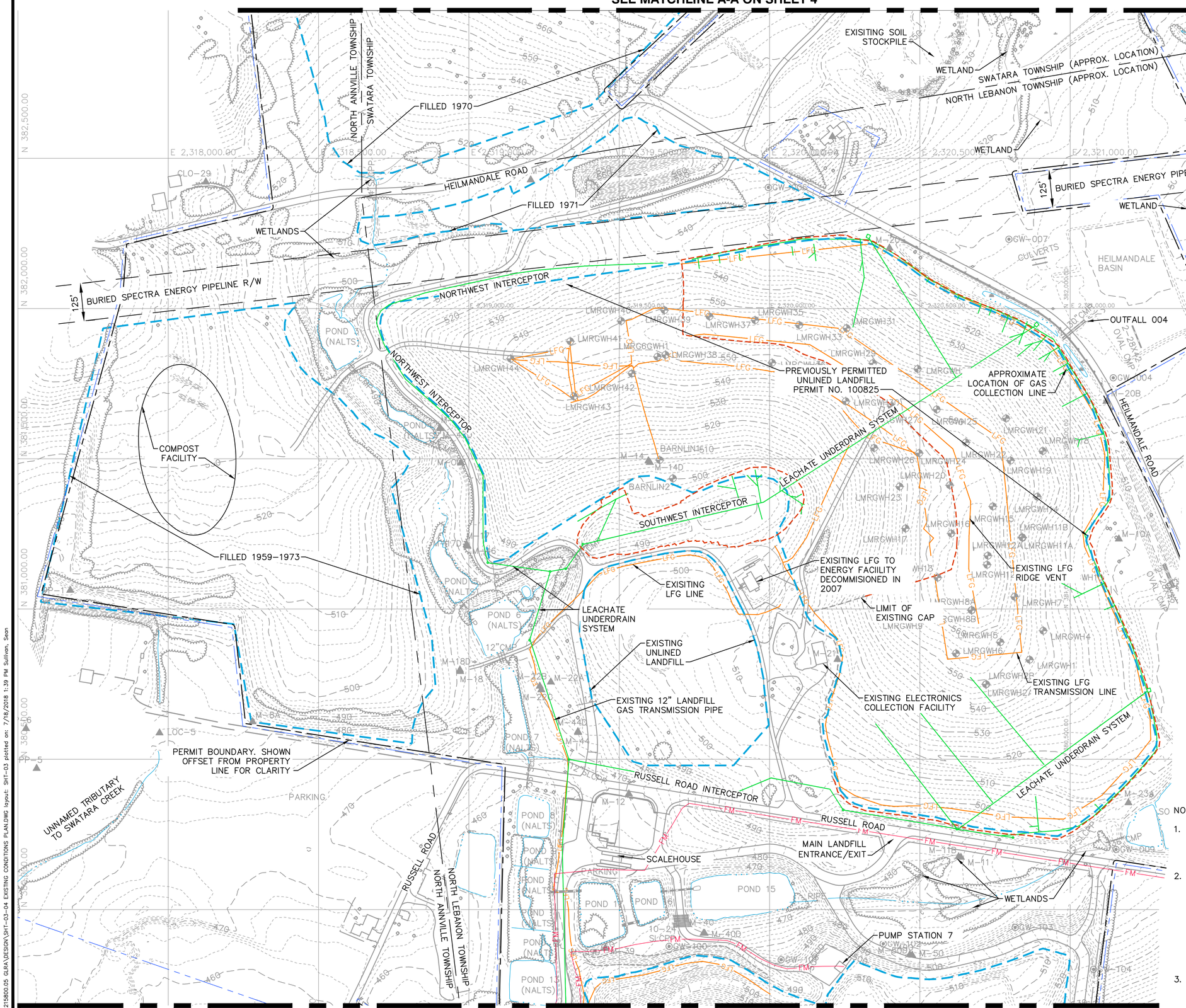

SEE MATCHLINE B-B ON SHEET 4

LEGEND

- EXISTING INDEX CONTOUR
- EXISTING INTERMEDIATE CONTOUR
- EXISTING LIMIT OF WASTE
- EXISTING LIMIT OF CAPPED AREA
- PROPERTY LINE
- PERMIT BOUNDARY
- EASEMENT
- TOWNSHIP LINE
- EXISTING POND/STREAM
- EXISTING STORM DRAIN
- FM — EXISTING FORCEMAIN
- LFG — EXISTING LFG TRANSMISSION/VENTING PIPE
- EXISTING INTERCEPTOR /UNDERDRAIN/GRAVITY MAIN
- GW–001 — EXISTING PERIMETER MONITORING PROBE
- M–3 — EXISTING GROUNDWATER MONITORING WELL
- LMRG6GWH1 — EXISTING LFG EXTRACTION WELL

NOTES:

1. TOPOGRAPHIC AND PLANIMETRIC INFORMATION DEPICTED ON THIS PLAN IN THE AREA OF THE ACTIVE LANDFILL HAS BEEN DERIVED FROM A FIELD SURVEY PERFORMED BY HERSHEY SURVEYING, INC ON JANUARY 4, 2016.
2. TOPOGRAPHIC AND PLANIMETRIC INFORMATION IN AREAS OUTSIDE OF THE ACTIVE LANDFILL HAVE BEEN DERIVED FROM AN AERIAL SURVEY PERFORMED BY ROBERT KIMBALL & ASSOCIATES INC. IN 2010 IN THE GREATER LEBANON REFUSE AUTHORITY SITE SPECIFIC HORIZONTAL DATUM. DATA HAS BEEN CONVERTED FROM GLRA HORIZONTAL DATUM TO PENNSYLVANIA STATE PLANE SOUTH ZONE NAD83 BY GREATER LEBANON REFUSE AUTHORITY AND PROVIDED TO HERSHEY SURVEYING, INC IN 2015.
3. VERTICAL DATUM WITHIN THE LIMITS OF THE ACTIVE LANDFILL IS BASED ON AN ASSUMED DATUM BY GREATER LEBANON REFUSE AUTHORITY. VERTICAL DATUM OUTSIDE OF ACTIVE LANDFILL LIMITS IS BASED ON NAVD 1988.

COMMONWEALTH OF PENNSYLVANIA REGISTERED PROFESSIONAL ENGINEER DENISE WESSELS

NO.	REVISION	DATE

SHEET TITLE: EXISTING CONDITIONS I

PROJECT TITLE: HEILMANDALE EXPANSION PHASE II PERMIT MODIFICATION

CLIENT: GREATER LEBANON REFUSE AUTHORITY
1610 RUSSELL ROAD
LEBANON, PENNSYLVANIA 17046

SCS ENGINEERS
STEARNS, CONRAD AND SCHMIDT CONSULTING ENGINEERS, INC.
22 DENVER ROAD; SUITE E - DENVER, PA 17517
PH. (610) 382-3050 SCSENGINEERS.COM

PROJ. NO. 02215800.05 | DWN. BY: SRS | Q/A RVW BY: DW
DSN. BY: ERS | CHK. BY: DW | APP. BY: DW

CADD FILE: SHT–03–04

DATE: JULY 2018

SCALE: 1"=150'

DRAWING NO. 3 of 36

M:\02215800.05 GLRA\DESIGN\SHT-03-04 EXISTING CONDITIONS PLAN.DWG layout: SHT-03 plotted on: 7/18/2018 1:39 PM Sullivan, Sean

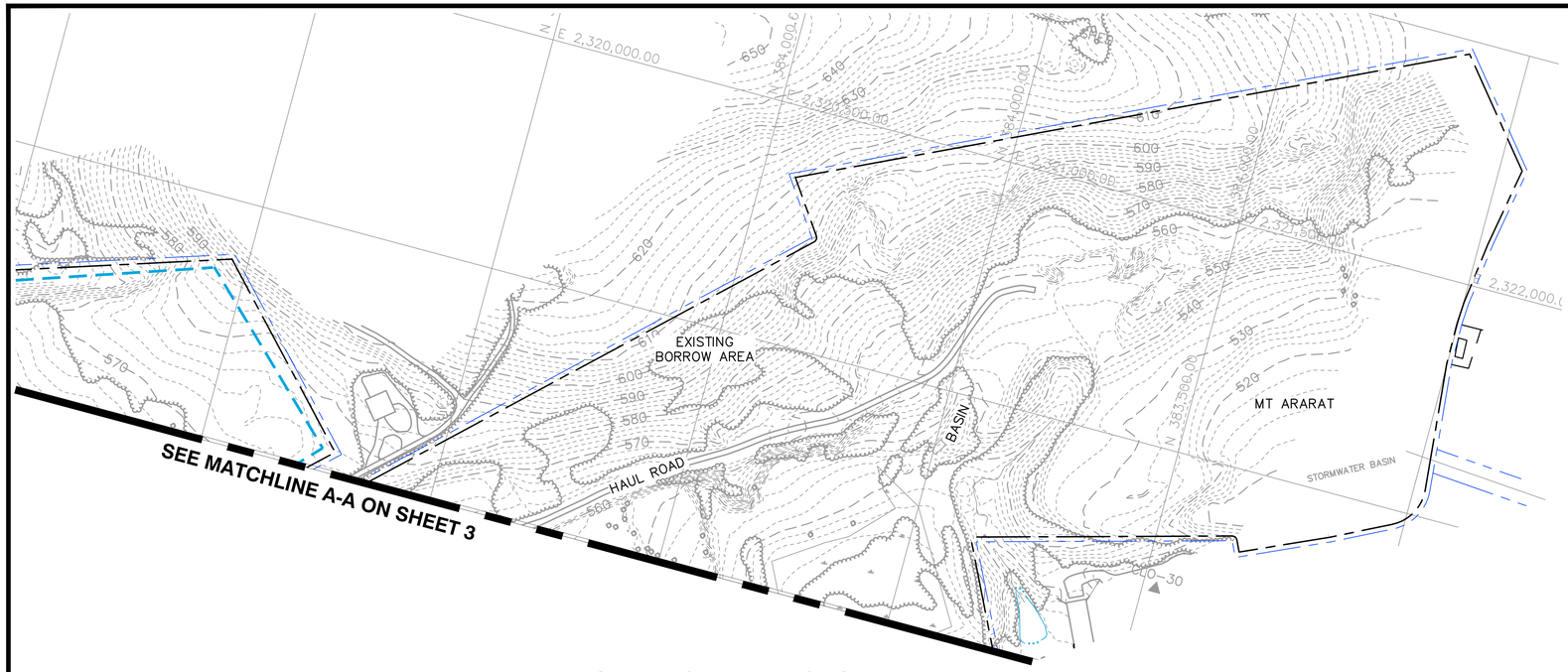

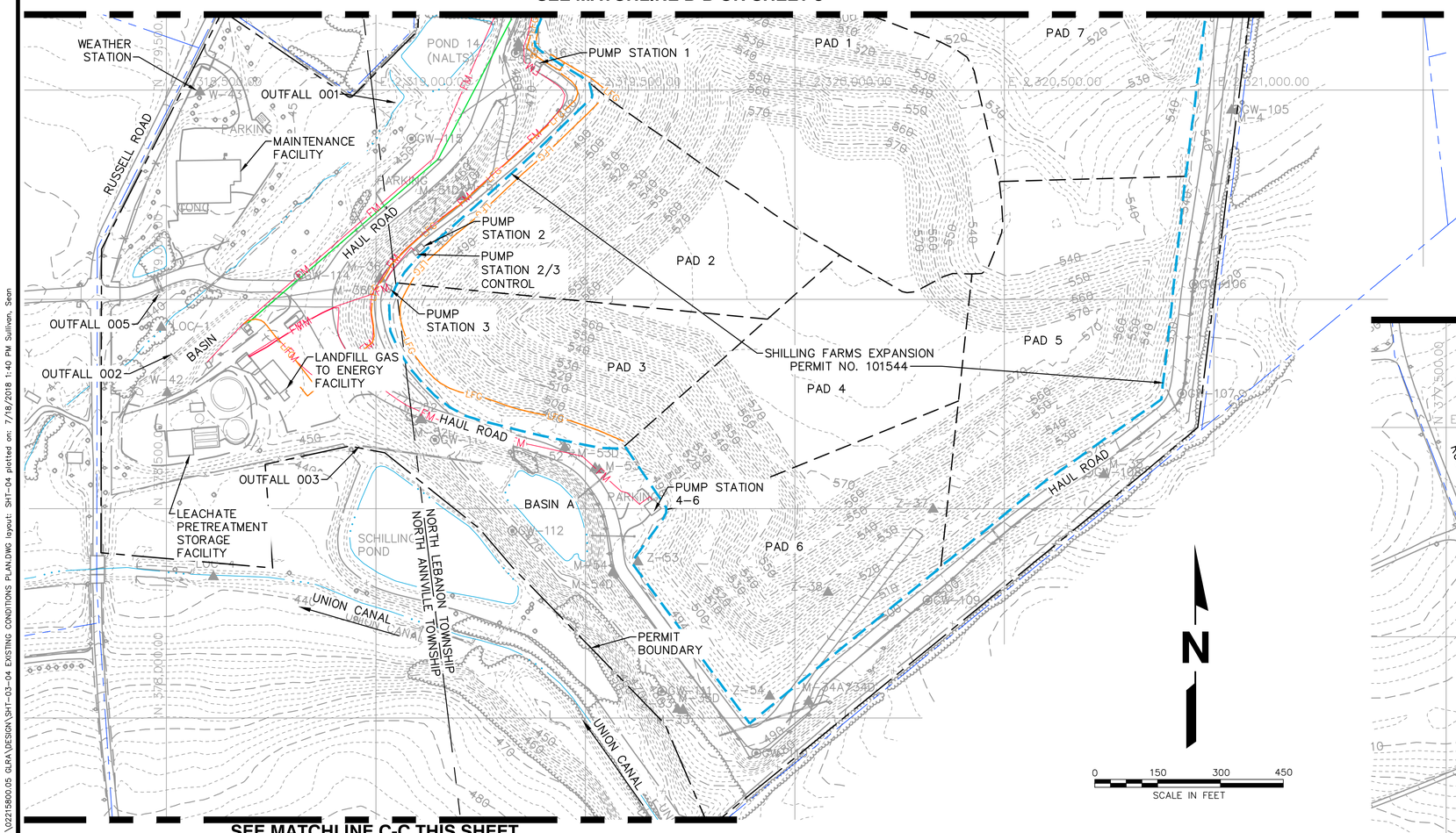

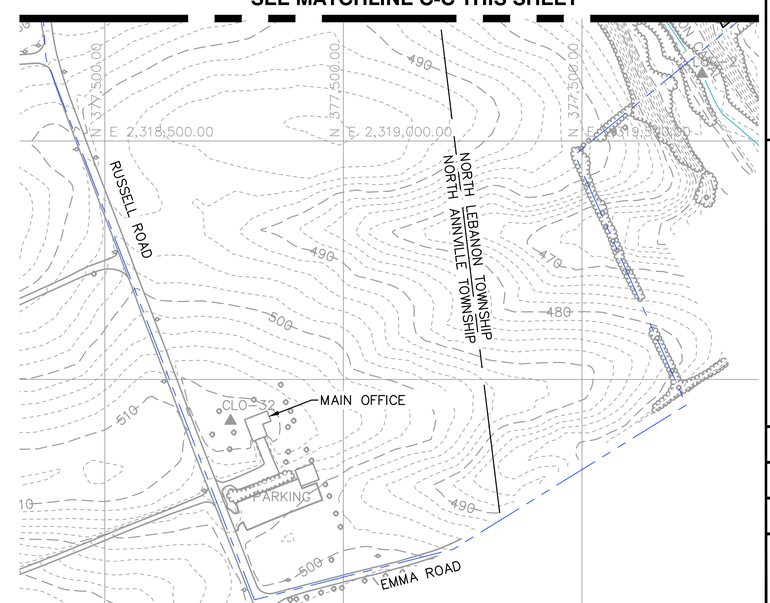

NOTES:

1. TOPOGRAPHIC AND PLANIMETRIC INFORMATION DEPICTED ON THIS PLAN IN THE AREA OF THE ACTIVE LANDFILL HAS BEEN DERIVED FROM A FIELD SURVEY PERFORMED BY HERSHEY SURVEYING, INC ON JANUARY 4, 2016.
2. TOPOGRAPHIC AND PLANIMETRIC INFORMATION IN AREAS OUTSIDE OF THE ACTIVE LANDFILL HAVE BEEN DERIVED FROM AN AERIAL SURVEY PERFORMED BY ROBERT KIMBALL & ASSOCIATES INC. IN 2010 IN THE GREATER LEBANON REFUSE AUTHORITY SITE SPECIFIC HORIZONTAL DATUM. DATA HAS BEEN CONVERTED FROM GLRA HORIZONTAL DATUM TO PENNSYLVANIA STATE PLANE SOUTH ZONE NAD83 BY GREATER LEBANON REFUSE AUTHORITY AND PROVIDED TO HERSHEY SURVEYING, INC IN 2015.
3. VERTICAL DATUM WITHIN THE LIMITS OF THE ACTIVE LANDFILL IS BASED ON AN ASSUMED DATUM BY GREATER LEBANON REFUSE AUTHORITY. VERTICAL DATUM OUTSIDE OF ACTIVE LANDFILL LIMITS IS BASED ON NAVD 1988.

LEGEND

- 500 — EXISTING INDEX CONTOUR
- EXISTING INTERMEDIATE CONTOUR
- EXISTING LIMIT OF WASTE
- EXISTING LIMIT OF CAPPED AREA
- PROPERTY LINE
- PERMIT BOUNDARY
- EASEMENT
- TOWNSHIP LINE
- EXISTING POND/STREAM
- EXISTING STORM DRAIN
- FM — EXISTING FORCEMAIN
- LFG — EXISTING LFG TRANSMISSION/VENTING PIPE
- EXISTING INTERCEPTOR /UNDERDRAIN/GRAVITY MAIN
- GW-001 — EXISTING PERIMETER MONITORING PROBE
- M-3 — EXISTING GROUNDWATER MONITORING WELL
- LOC-1 — EXISTING SURFACE WATER MONITORING LOCATION

COMMONWEALTH OF PENNSYLVANIA REGISTERED PROFESSIONAL ENGINEER DENISE WESSELS

NO.	REVISION	DATE

SHEET TITLE: EXISTING CONDITIONS II

PROJECT TITLE: HEILMANDALE EXPANSION PHASE II PERMIT MODIFICATION

CLIENT: GREATER LEBANON REFUSE AUTHORITY, 1610 RUSSELL ROAD, LEBANON, PENNSYLVANIA 17046

SCS ENGINEERS
STEARNS, CONRAD AND SCHMIDT CONSULTING ENGINEERS, INC.
22 DENVER ROAD; SUITE E - DENVER, PA 17517
PH. (610) 382-3050 SCSENGINEERS.COM

PROJ. NO. 02215800.05 | DWN. BY: SRS | Q/A RVW BY: DW
DSN. BY: ERS | CHK. BY: DW | APP. BY: DW

CADD FILE: SHT-03-04
DATE: JULY 2018
SCALE: 1"=150'
DRAWING NO. 4 of 36

M:\02215800.05 GLRA\DESIGN\SHT-03-04 EXISTING CONDITIONS PLAN.DWG layout: SHT-04 plotted on: 7/18/2018 1:40 PM Sullivan, Sean

NOTES:

1. EXISTING WASTE EXCAVATED TO CONSTRUCT HEILMANDALE EXPANSION TO BE RELOCATED TO THE ACTIVE LANDFILL.
2. REFER TO SHEET 28 FOR LFG FEATURES TO BE DECOMMISSIONED.
3. EXISTING BUILDINGS MAY ONLY BE DEMOLISHED AUGUST 16 TO MARCH 31 TO AVOID IMPACTS ON NESTING BARN OWLS PER THE PA GAME COMMISSION. THIS WORK MAY BE COMPLETED PRIOR TO BOTTOM LINER CONSTRUCTION.
4. SEE SHEET 9 FOR REVISIONS TO THE SOUTHEAST BASIN.

PAD AREAS	
PAD 8	9.57 AC
PAD 9	7.30 AC
PAD 10	8.91 AC
PAD 11	7.02 AC
PAD 12	6.54 AC
PAD 13	7.35 AC
TOTAL	46.69 AC

LEGEND

- 500 — EXISTING INDEX CONTOUR
- EXISTING INTERMEDIATE CONTOUR
- EXISTING LIMIT OF WASTE
- EXISTING LIMIT OF CAPPED AREA
- EXISTING PROPERTY LINE
- PERMIT BOUNDARY
- EXISTING EASEMENT
- EXISTING TOWNSHIP LINE
- EXISTING POND/STREAM
- EXISTING STORM DRAIN
- EXISTING INTERCEPTOR /UNDERDRAIN/GRAVITY MAIN
- FM — EXISTING FORCEMAIN
- LFG — EXISTING LFG TRANSMISSION/VENTING PIPE
- GW-001 — EXISTING PERIMETER MONITORING PROBE
- M-3 — EXISTING GROUNDWATER MONITORING WELL
- M-12D — PROPOSED GROUNDWATER MONITORING WELL
- 500 — PROPOSED INDEX CONTOUR
- PROPOSED INTERMEDIATE CONTOUR
- PROPOSED PERIMETER/HAUL ROAD
- PROPOSED LIMIT OF NEW WASTE
- PROPOSED PAD LIMIT
- NEW CAPPED LIMIT
- CAP AND WASTE TO BE REMOVED

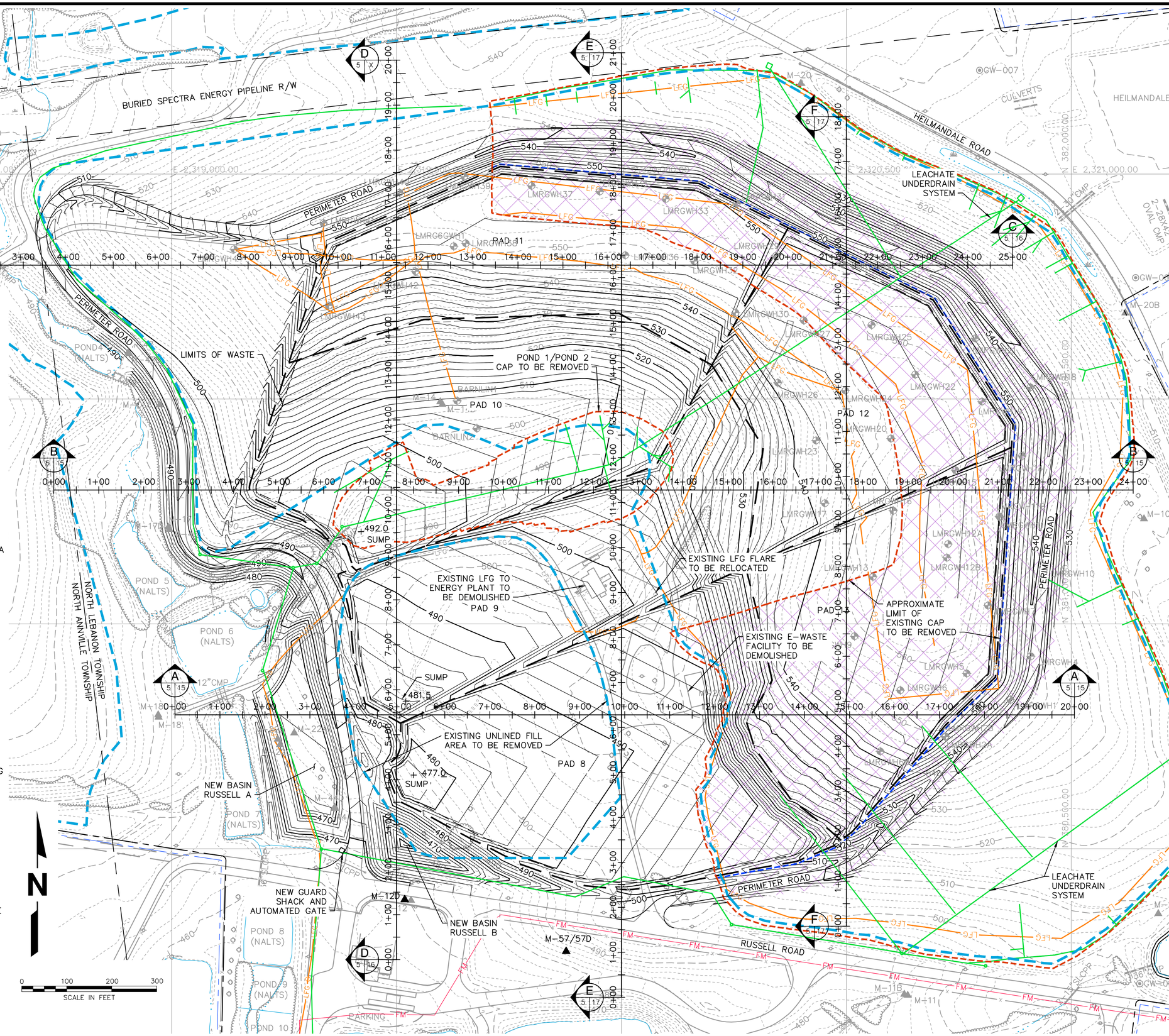

COMMONWEALTH OF PENNSYLVANIA REGISTERED PROFESSIONAL ENGINEER DENISE WESSELS

NO.	REVISION	DATE

SHEET TITLE: OVERALL EXCAVATION GRADE PLAN

PROJECT TITLE: HEILMANDALE EXPANSION PHASE II PERMIT MODIFICATION

CLIENT: GREATER LEBANON REFUSE AUTHORITY
1610 RUSSELL ROAD
LEBANON, PENNSYLVANIA 17046

SCS ENGINEERS
STEARNS, CONRAD AND SCHMIDT CONSULTING ENGINEERS, INC.
22 DENVER ROAD; SUITE E - DENVER, PA 17517
PH. (610) 382-3050 SCSENGINEERS.COM

PROJ. NO. 02215800.05 | DSN. BY: ERS | DWN. BY: SRS | CHK. BY: DW | Q/A RVW BY: DW | APP. BY: DW

CADD FILE: SHT-05

DATE: JULY 2018

SCALE: 1"=100'

DRAWING NO. 5 of 36

M:\02215800.05 GLRA\DESIGN\SHT-05 OVERALL EXCAVATION GRADE PLAN.DWG layout: SHT-05 plotted on: 7/18/2018 1:44 PM Sullivan, Sean

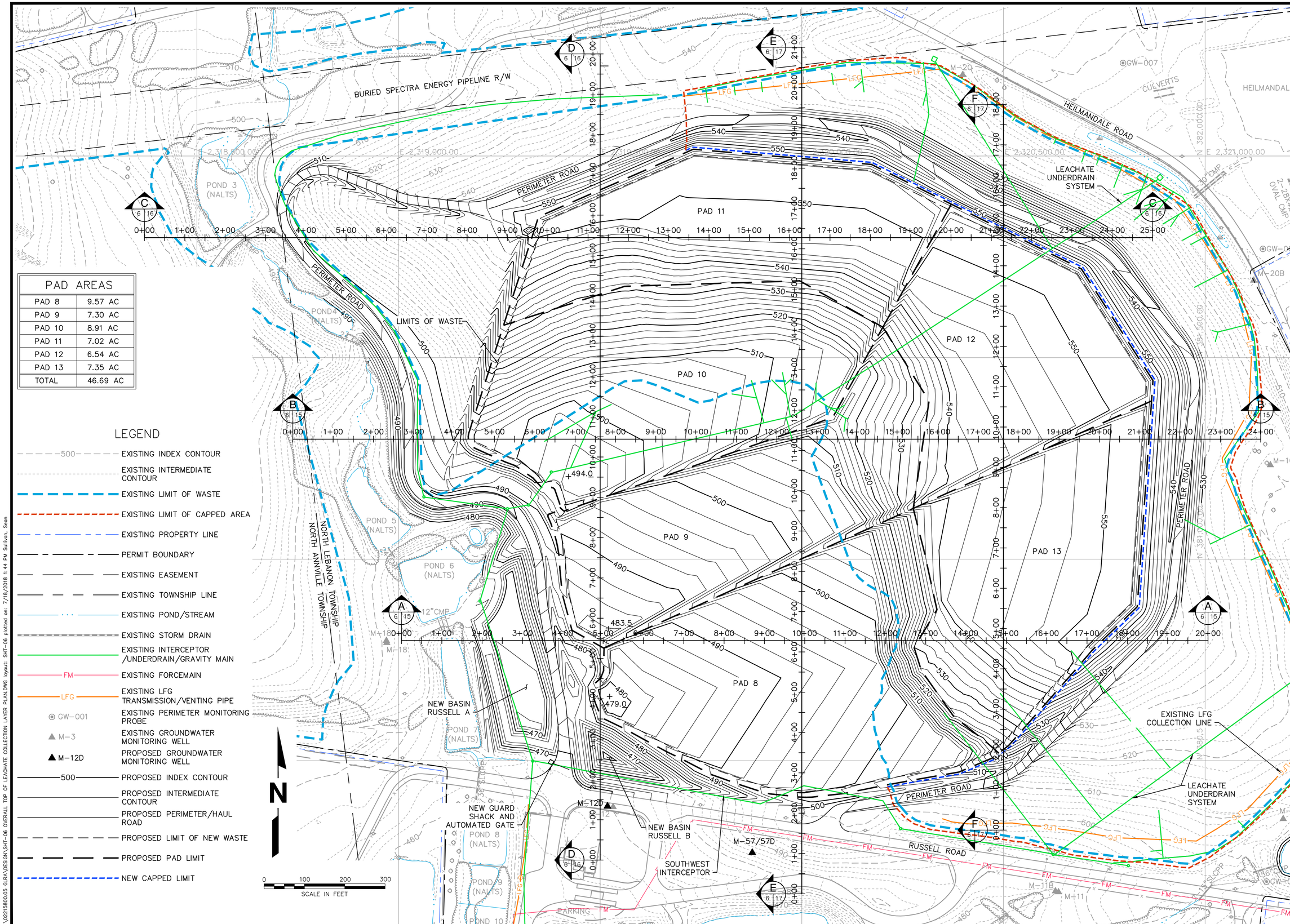

PAD AREAS	
PAD 8	9.57 AC
PAD 9	7.30 AC
PAD 10	8.91 AC
PAD 11	7.02 AC
PAD 12	6.54 AC
PAD 13	7.35 AC
TOTAL	46.69 AC

LEGEND

- 500 — EXISTING INDEX CONTOUR
- EXISTING INTERMEDIATE CONTOUR
- EXISTING LIMIT OF WASTE
- EXISTING LIMIT OF CAPPED AREA
- EXISTING PROPERTY LINE
- PERMIT BOUNDARY
- EXISTING EASEMENT
- EXISTING TOWNSHIP LINE
- EXISTING POND/STREAM
- EXISTING STORM DRAIN
- EXISTING INTERCEPTOR /UNDERDRAIN/GRAVITY MAIN
- FM — EXISTING FORCEMAIN
- LFG — EXISTING LFG TRANSMISSION/VENTING PIPE
- GW-001 — EXISTING PERIMETER MONITORING PROBE
- M-3 — EXISTING GROUNDWATER MONITORING WELL
- M-12D — PROPOSED GROUNDWATER MONITORING WELL
- 500 — PROPOSED INDEX CONTOUR
- PROPOSED INTERMEDIATE CONTOUR
- PROPOSED PERIMETER/HAUL ROAD
- PROPOSED LIMIT OF NEW WASTE
- PROPOSED PAD LIMIT
- NEW CAPPED LIMIT

COMMONWEALTH OF PENNSYLVANIA
REGISTERED PROFESSIONAL ENGINEER
DENISE WESSELS

NO.	REVISION	DATE

SHEET TITLE: OVERALL TOP OF LEACHATE COLLECTION LAYER PLAN

PROJECT TITLE: HEILMANDALE EXPANSION PHASE II PERMIT MODIFICATION

CLIENT: GREATER LEBANON REFUSE AUTHORITY
1610 RUSSELL ROAD
LEBANON, PENNSYLVANIA 17046

SCS ENGINEERS
STEARNS, CONRAD AND SCHMIDT CONSULTING ENGINEERS, INC.
22 DENVER ROAD; SUITE E - DENVER, PA 17517
PH. (610) 382-3050 SCSENGINEERS.COM

PROJ. NO. 02215800.05 | DWN. BY: SRS | Q/A RVW BY: DW
DSN. BY: ERS | CHK. BY: DW | APP. BY: DW

CADD FILE: SHT-06
DATE: JULY 2018
SCALE: 1"=100'
DRAWING NO. 6 of 36

M:\02215800.05 QLRA\DESIGN\SHT-06 OVERALL TOP OF LEACHATE COLLECTION LAYER PLAN.DWG layout: SHT-06 plotted on: 7/18/2018 1:44 PM Sullivan, Sean

COMMONWEALTH OF PENNSYLVANIA REGISTERED PROFESSIONAL ENGINEER DENISE WESSELS

NO.	REVISION	DATE

SHEET TITLE: OVERALL FINAL COVER GRADE PLAN

PROJECT TITLE: HEILMANDALE EXPANSION PHASE II PERMIT MODIFICATION

CLIENT: GREATER LEBANON REFUSE AUTHORITY, 1610 RUSSELL ROAD, LEBANON, PENNSYLVANIA 17046

SCS ENGINEERS
STEARNS, CONRAD AND SCHMIDT CONSULTING ENGINEERS, INC.
22 DENVER ROAD; SUITE E - DENVER, PA 17517
PH. (610) 382-3050 SCSENGINEERS.COM

PROJ. NO. 02215800.05 | DWN. BY: SRS | Q/A RVW BY: DW | DSN. BY: ERS | CHK. BY: DW | APP. BY: DW

CADD FILE: SHT-07

DATE: JULY 2018

SCALE: 1"=100'

DRAWING NO. 7 of 36

M:\02215800.05 QLPA\DESIGN\SHT-07 OVERALL FINAL COVER GRADE PLAN.DWG layout: SHT-07 plotted on: 7/18/2018 1:45 PM Sullivan, Sean

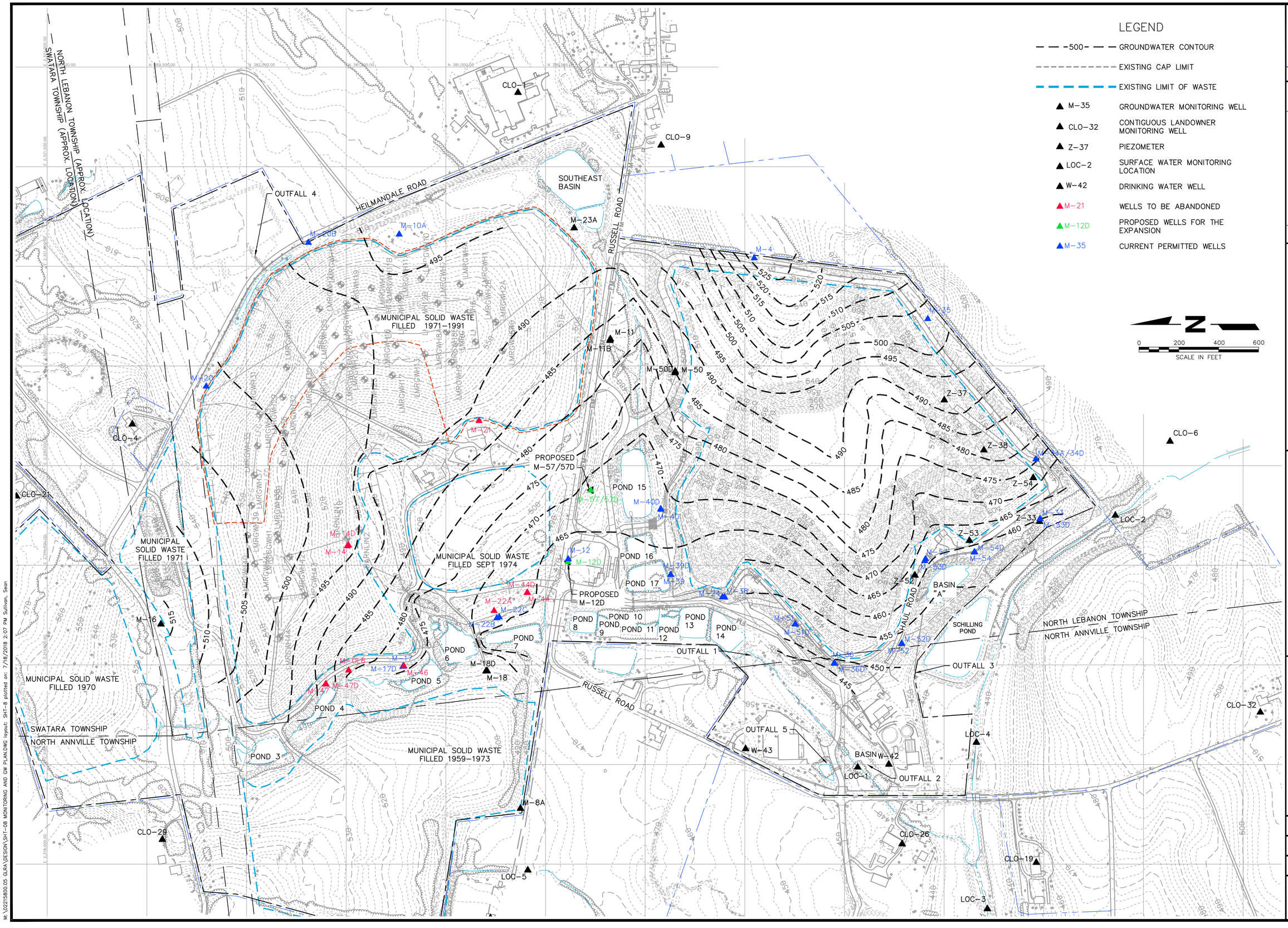

SITE MONITORING PLAN WITH GROUNDWATER CONTOURS

SHEET TITLE

HEILMANDALE EXPANSION PHASE II PERMIT MODIFICATION

PROJECT TITLE

GREATER LEBANON REFUSE AUTHORITY
1610 RUSSELL ROAD
LEBANON, PENNSYLVANIA 17046

CLIENT

NO.	REVISION	DATE
1		
2		
3		
4		
5		
6		

COMMONWEALTH OF PENNSYLVANIA
REGISTERED PROFESSIONAL
DENISE WESSELS
ENGINEER

SCS ENGINEERS
STEARNS, CONRAD AND SCHMIDT CONSULTING ENGINEERS, INC.
22 DENVER ROAD; SUITE E - DENVER, PA 17517
PH. (610) 382-3050 SCSENGINEERS.COM

PROJ. NO. 02215800.05 | DWN. BY: SRS | Q/A RVW BY: DW
DSN. BY: ERS | CHK. BY: DW | APP. BY: DW

CADD FILE: SHT-18

DATE: JULY 2018

SCALE: 1"=200'

DRAWING NO. 8 of 36

M:\02215800.05 GLRA\DESIGN\SHT-08 MONITORING AND CW PLAN.DWG layout: SHT-8 plotted on: 7/18/2018 2:07 PM Sullivan, Sean

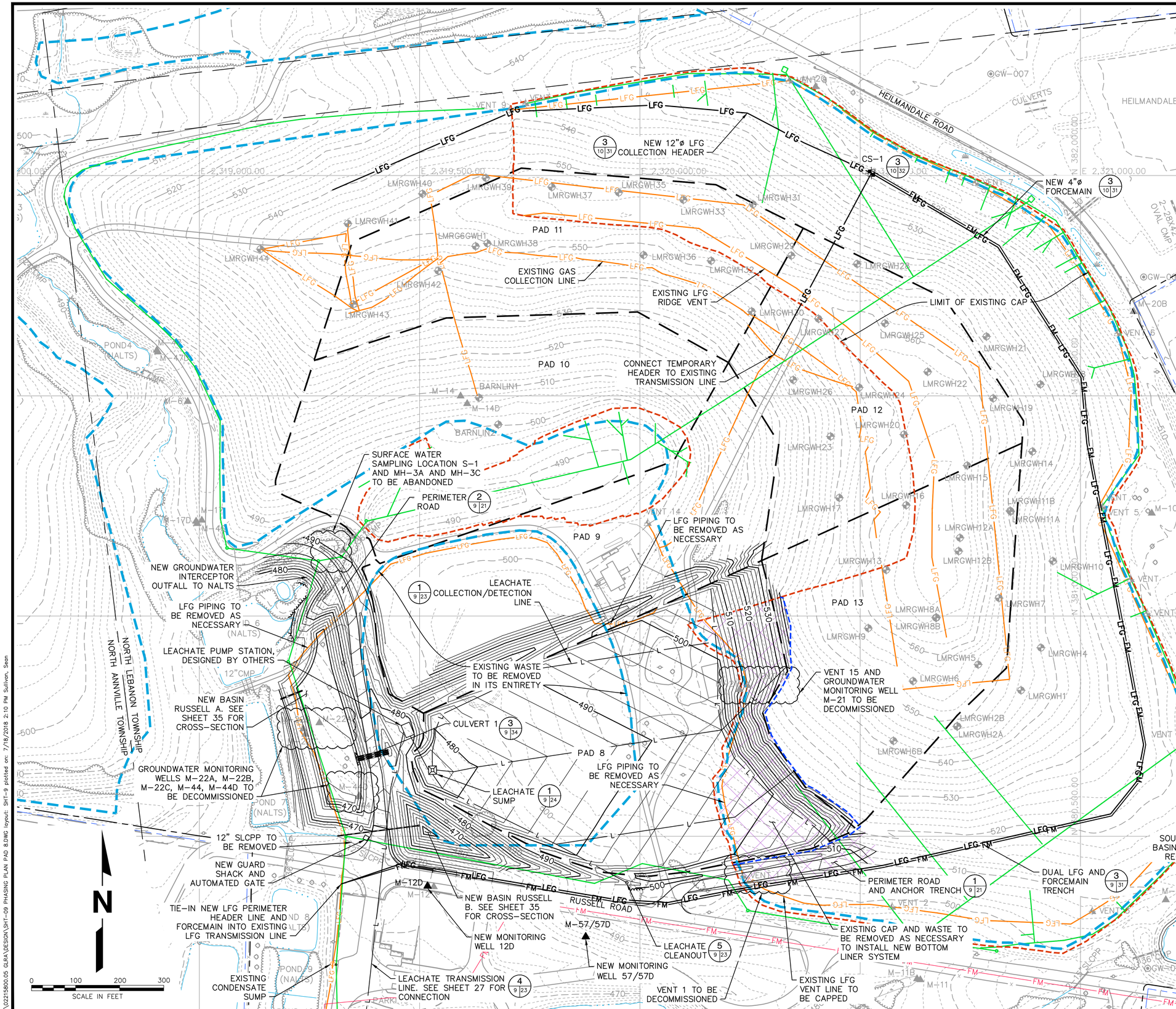

LEGEND

- EXISTING INDEX CONTOUR
- EXISTING INTERMEDIATE CONTOUR
- EXISTING LIMIT OF WASTE
- EXISTING LIMIT OF CAPPED AREA
- EXISTING POND/STREAM
- EXISTING PROPERTY LINE
- PERMIT BOUNDARY
- EXISTING INTERCEPTOR /UNDERDRAIN/GRAVITY MAIN
- FM — EXISTING FORCEMAIN
- LFG — EXISTING LFG TRANSMISSION/VENTING PIPE
- GW-001 — EXISTING PERIMETER MONITORING PROBE
- VENT 7 — EXISTING PASSIVE VENT
- LMRGWH1 — EXISTING EXTRACTION WELL
- CS-1 — PROPOSED CONDENSATE SUMP
- PROPOSED INDEX CONTOUR
- PROPOSED INTERMEDIATE CONTOUR
- PROPOSED PERIMETER/HAUL ROAD
- NEW CAPPED LIMIT
- L — PROPOSED LEACHATE COLLECTION/DETECTION LINE
- LFG — PROPOSED PERIMETER LFG HEADER
- FM — PROPOSED FORCEMAIN
- CAP AND WASTE TO BE REMOVED
- PROPOSED PAD LIMIT

NOTES:

1. RUSSELL BASINS A AND B MUST BE CONSTRUCTED BEFORE PAD 8. SOUTHEAST BASIN MUST BE CONSTRUCTED PRIOR TO THE FILLING OF PAD 8.
2. PAD 8 VOLUME = 692,000 FILL
3. EXISTING ELECTRONICS RECYCLING FACILITY AND LFG FLARE TO BE DEMOLISHED AND REMOVED PRIOR TO PAD 8 CONSTRUCTION. DEMOLITION MAY ONLY OCCUR AUGUST 16 TO MARCH 31 TO AVOID IMPACTS TO NESTING BARN OWLS PER THE PA GAME COMMISSION. THIS WORK MAY BE COMPLETED PRIOR TO BOTTOM LINER CONSTRUCTION.
4. BASE GRADES SHOWN IN PAD 8.
5. WASTE FROM UNLINED AREA TO BE DISPOSED IN DOUBLE LINED ACTIVE LANDFILL AREA.

COMMONWEALTH OF PENNSYLVANIA REGISTERED PROFESSIONAL ENGINEER DENISE WESSELS

NO.	REVISION	DATE

SHEET TITLE: **PHASING PLAN - PAD 8**

PROJECT TITLE: **HEILMANDALE EXPANSION PHASE II PERMIT MODIFICATION**

CLIENT: **GREATER LEBANON REFUSE AUTHORITY**
1610 RUSSELL ROAD
LEBANON, PENNSYLVANIA 17046

SCS ENGINEERS
STEARNS, CONRAD AND SCHMIDT CONSULTING ENGINEERS, INC.
22 DENVER ROAD; SUITE E - DENVER, PA 17517
PH. (610) 382-3050 SCSENGINEERS.COM

PROJ. NO. 02215800.05 | DWN. BY: SRS | Q/A RVW BY: DW
DSN. BY: ERS | CHK. BY: DW | APP. BY: DW

CADD FILE: SHT-9
DATE: JULY 2018
SCALE: 1"=100'
DRAWING NO. 9 of 36

M:\02215800.05 GLRA\DESIGN\SHT-09 PHASING PLAN PAD 8.DWG layout: SHT-9 plotted on: 7/18/2018 2:10 PM Sullivan, Sean

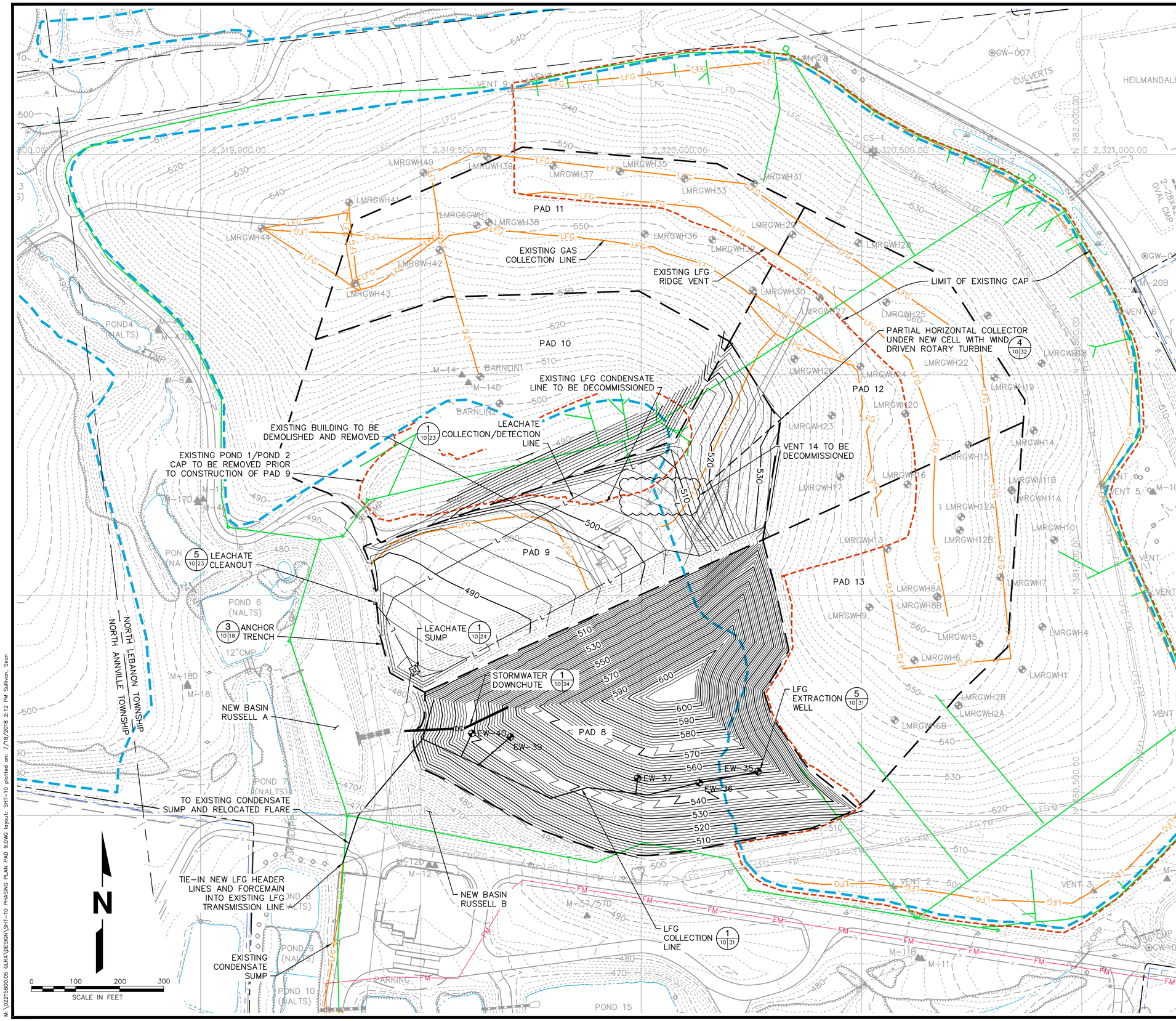

LEGEND

- EXISTING INDEX CONTOUR
- EXISTING INTERMEDIATE CONTOUR
- EXISTING LIMIT OF WASTE
- EXISTING LIMIT OF CAPPED AREA
- EXISTING POND/STREAM
- EXISTING PROPERTY LINE
- PERMIT BOUNDARY
- EXISTING INTERCEPTOR /UNDERDRAIN/GRAVITY MAIN
- FM — EXISTING FORCEMAIN
- LFG — EXISTING LFG TRANSMISSION/VENTING PIPE
- GW-001 — EXISTING PERIMETER MONITORING PROBE
- VENT 7 — EXISTING PASSIVE VENT
- LMRGWH1 — EXISTING EXTRACTION WELL
- CS-1 — EXISTING CONDENSATE SUMP
- EW-25 — PROPOSED EXTRACTION WELL
- PROPOSED INDEX CONTOUR
- PROPOSED INTERMEDIATE CONTOUR
- PROPOSED PERIMETER/HAUL ROAD
- L — PROPOSED LEACHATE COLLECTION/DETECTION LINE
- PROPOSED HORIZONTAL COLLECTOR
- PROPOSED LFG HEADER/LATERAL
- PROPOSED PAD LIMIT
- DC — PROPOSED DOWNCHUTE

NOTES:

1. PAD 9 VOLUME = 863,000 C.Y. FILL
2. EXISTING BUILDING TO BE DEMOLISHED PRIOR TO PAD 8 CONSTRUCTION. DEMOLITION MAY ONLY OCCUR AUGUST 16 TO MARCH 31 TO AVOID IMPACTS TO NESTING BARN OWLS PER THE PA GAME COMMISSION. THIS WORK MAY BE COMPLETED PRIOR TO BOTTOM LINER CONSTRUCTION.
3. BASE GRADES SHOWN IN PAD 9.
4. WASTE FROM UNLINED AREA TO BE DISPOSED IN DOUBLE LINED ACTIVE LANDFILL AREA.

COMMONWEALTH OF PENNSYLVANIA REGISTERED PROFESSIONAL ENGINEER DENISE WESSELS

NO.	REVISION	DATE

SHEET TITLE: **PHASING PLAN - PAD 9**

PROJECT TITLE: **HEILMANDALE EXPANSION PHASE II PERMIT MODIFICATION**

CLIENT: **GREATER LEBANON REFUSE AUTHORITY**
1610 RUSSELL ROAD
LEBANON, PENNSYLVANIA 17046

SCS ENGINEERS
STEARNS, CONRAD AND SCHMIDT CONSULTING ENGINEERS, INC.
22 DENVER ROAD; SUITE E- DENVER, PA 17517
PH. (610) 382-3050 SCSENGINEERS.COM

PROJ. NO. 02215800.05 | DWN. BY: SRS | Q/A RVW BY: DW | DSN. BY: ERS | CHK. BY: DW | APP. BY: DW

CADD FILE: SHT-10

DATE: JULY 2018

SCALE: 1"=100'

DRAWING NO. **10** of **36**

M:\02215800.05 GLRA\DESIGN\SHT-10 PHASING PLAN PAD 9.DWG layout: SHT-10 plotted on: 7/18/2018 2:12 PM Sullivan, Sean

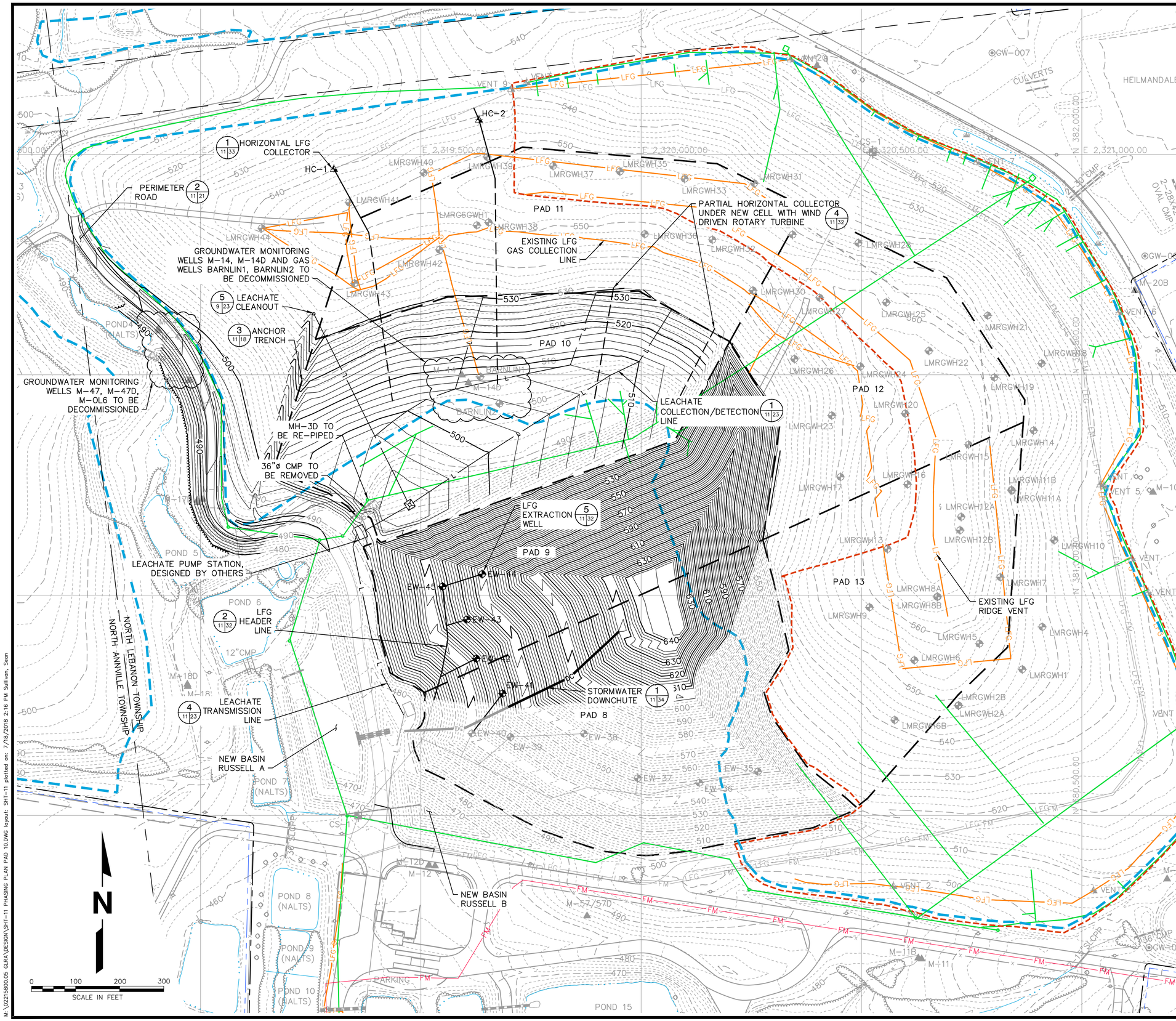

LEGEND

- EXISTING INDEX CONTOUR
- EXISTING INTERMEDIATE CONTOUR
- EXISTING LIMIT OF WASTE
- EXISTING LIMIT OF CAPPED AREA
- EXISTING POND/STREAM
- EXISTING PROPERTY LINE
- PERMIT BOUNDARY
- EXISTING INTERCEPTOR /UNDERDRAIN/GRAVITY MAIN
- FM — EXISTING FORCEMAIN
- LFG — EXISTING LFG TRANSMISSION/VENTING PIPE
- DC — EXISTING DOWNCHUTE
- GW-001 — EXISTING PERIMETER MONITORING PROBE
- VENT 7 — EXISTING PASSIVE VENT
- LMRGWH1 — EXISTING EXTRACTION WELL
- CS-1 — EXISTING CONDENSATE SUMP
- EW-25 — PROPOSED EXTRACTION WELL
- HC-7 — PROPOSED HORIZONTAL COLLECTOR WELLHEAD
- 500 — PROPOSED INDEX CONTOUR
- PROPOSED INTERMEDIATE CONTOUR
- PROPOSED PERIMETER/HAUL ROAD
- L — PROPOSED LEACHATE COLLECTION/DETECTION LINE
- PROPOSED HORIZONTAL COLLECTOR
- PROPOSED LFG HEADER/LATERAL
- PROPOSED PAD LIMIT
- DC — PROPOSED DOWNCHUTE

NOTES:

1. PAD 10 VOLUME = 1,277,000 C.Y. FILL
2. BASE GRADES SHOWN IN PAD 10. TOP OF INTERMEDIATE/FINAL GRADES SHOWN IN PADS 8 AND 9.

COMMONWEALTH OF PENNSYLVANIA REGISTERED PROFESSIONAL ENGINEER DENISE WESSELS

NO.	REVISION	DATE

SHEET TITLE: PHASING PLAN - PAD 10

PROJECT TITLE: HEILMANDALE EXPANSION PHASE II PERMIT MODIFICATION

CLIENT: GREATER LEBANON REFUSE AUTHORITY
1610 RUSSELL ROAD
LEBANON, PENNSYLVANIA 17046

SCS ENGINEERS
STEARNS, CONRAD AND SCHMIDT CONSULTING ENGINEERS, INC.
22 DENVER ROAD; SUITE E - DENVER, PA 17517
PH. (610) 382-3050 SCSENGINEERS.COM

PROJ. NO. 02215800.05 | DSN. BY: ERS | DWN. BY: SRS | CHK. BY: DW | Q/A RVW BY: DW | APP. BY: DW

CADD FILE: SHT-11

DATE: JULY 2018

SCALE: 1"=100'

DRAWING NO. 11 of 36

M:\02215800.05 GLRA\DESIGN\SHT-11 PHASING PLAN PAD 10.DWG layout: SHT-11 plotted on: 7/18/2018 2:16 PM Sullivan, Sean

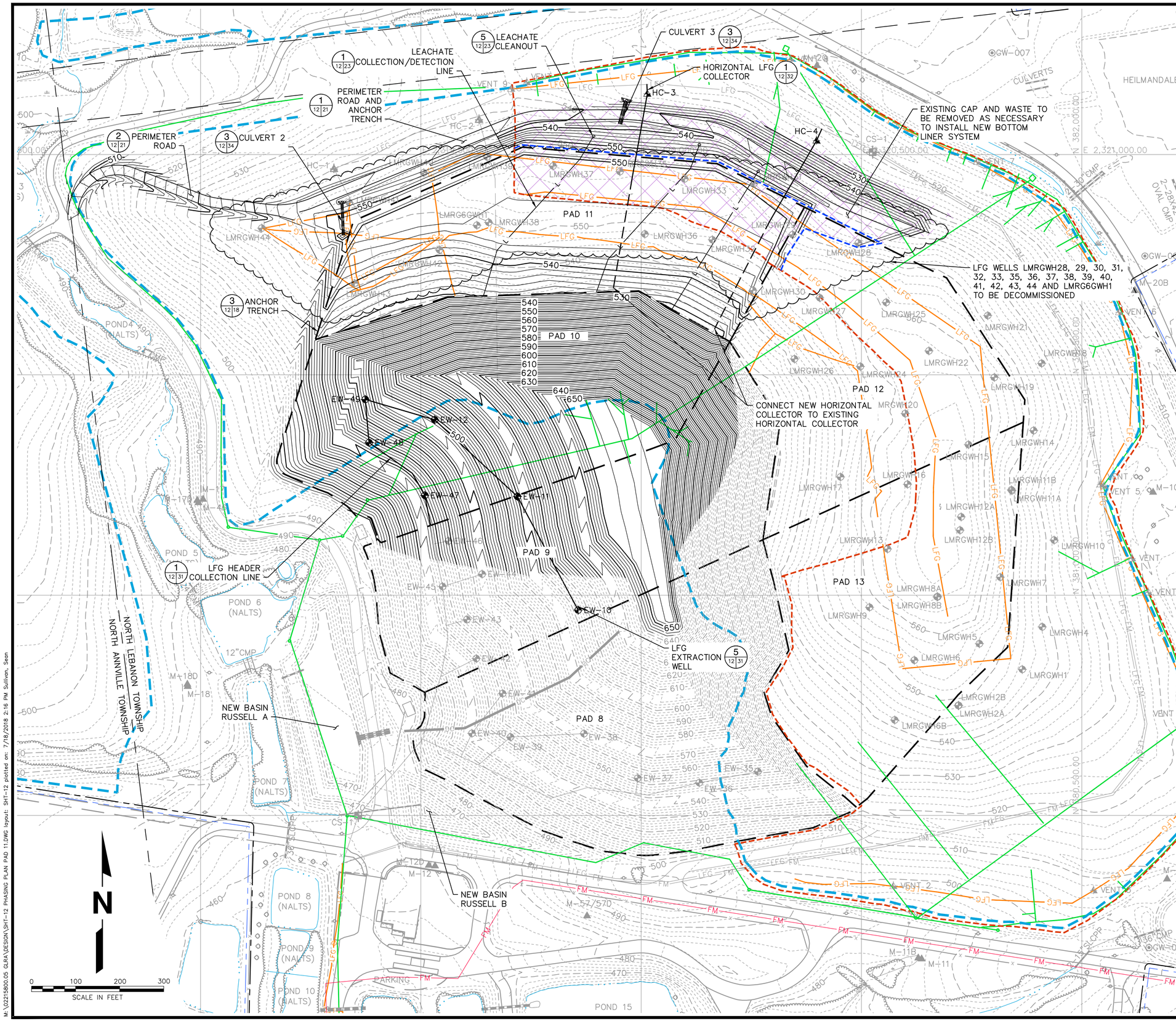

LEGEND

- EXISTING INDEX CONTOUR
- EXISTING INTERMEDIATE CONTOUR
- EXISTING LIMIT OF WASTE
- EXISTING LIMIT OF CAPPED AREA
- EXISTING POND/STREAM
- EXISTING PROPERTY LINE
- PERMIT BOUNDARY
- EXISTING INTERCEPTOR /UNDERDRAIN/GRAVITY MAIN
- FM — EXISTING FORCEMAIN
- LFG — EXISTING LFG TRANSMISSION/VENTING PIPE
- DC — EXISTING DOWNCHUTE
- GW-001 — EXISTING PERIMETER MONITORING PROBE
- VENT 7 — EXISTING PASSIVE VENT
- LMRGWH1 — EXISTING EXTRACTION WELL
- CS-1 — EXISTING CONDENSATE SUMP
- EW-25 — PROPOSED EXTRACTION WELL
- HC-7 — PROPOSED HORIZONTAL COLLECTOR WELLHEAD
- PROPOSED INDEX CONTOUR
- PROPOSED INTERMEDIATE CONTOUR
- PROPOSED PERIMETER/HAUL ROAD
- L — PROPOSED LEACHATE COLLECTION/DETECTION LINE
- PROPOSED HORIZONTAL COLLECTOR
- PROPOSED LFG HEADER/LATERAL
- NEW CAP LIMIT
- PROPOSED PAD LIMIT
- CAP AND WASTE TO BE REMOVED

NOTES:

1. PAD 11 VOLUME = 777,000 C.Y. FILL
2. BASE GRADES SHOWN IN PAD 11. TOP OF INTERMEDIATE/FINAL GRADES SHOWN IN PADS 8–10.

COMMONWEALTH OF PENNSYLVANIA REGISTERED PROFESSIONAL ENGINEER DENISE WESSELS

NO.	REVISION	DATE

SHEET TITLE: PHASING PLAN - PAD 11

PROJECT TITLE: HEILMANDALE EXPANSION PHASE II PERMIT MODIFICATION

CLIENT: GREATER LEBANON REFUSE AUTHORITY, 1610 RUSSELL ROAD, LEBANON, PENNSYLVANIA 17046

SCS ENGINEERS
STEARNS, CONRAD AND SCHMIDT CONSULTING ENGINEERS, INC.
22 DENVER ROAD, SUITE E - DENVER, PA 17517
PH. (610) 382-3050 SCSENGINEERS.COM

PROJ. NO. 02215800.05 | DWN. BY: SRS | Q/A RVW BY: DW
DSN. BY: ERS | CHK. BY: DW | APP. BY: DW

CADD FILE: SHT-12

DATE: JULY 2018

SCALE: 1"=100'

DRAWING NO. 12 of 36

M:\02215800.05 GLRA\DESIGN\SHT-12 PHASING PLAN PAD 11.DWG layout: SHT-12 plotted on: 7/18/2018 2:16 PM Sullivan, Sean

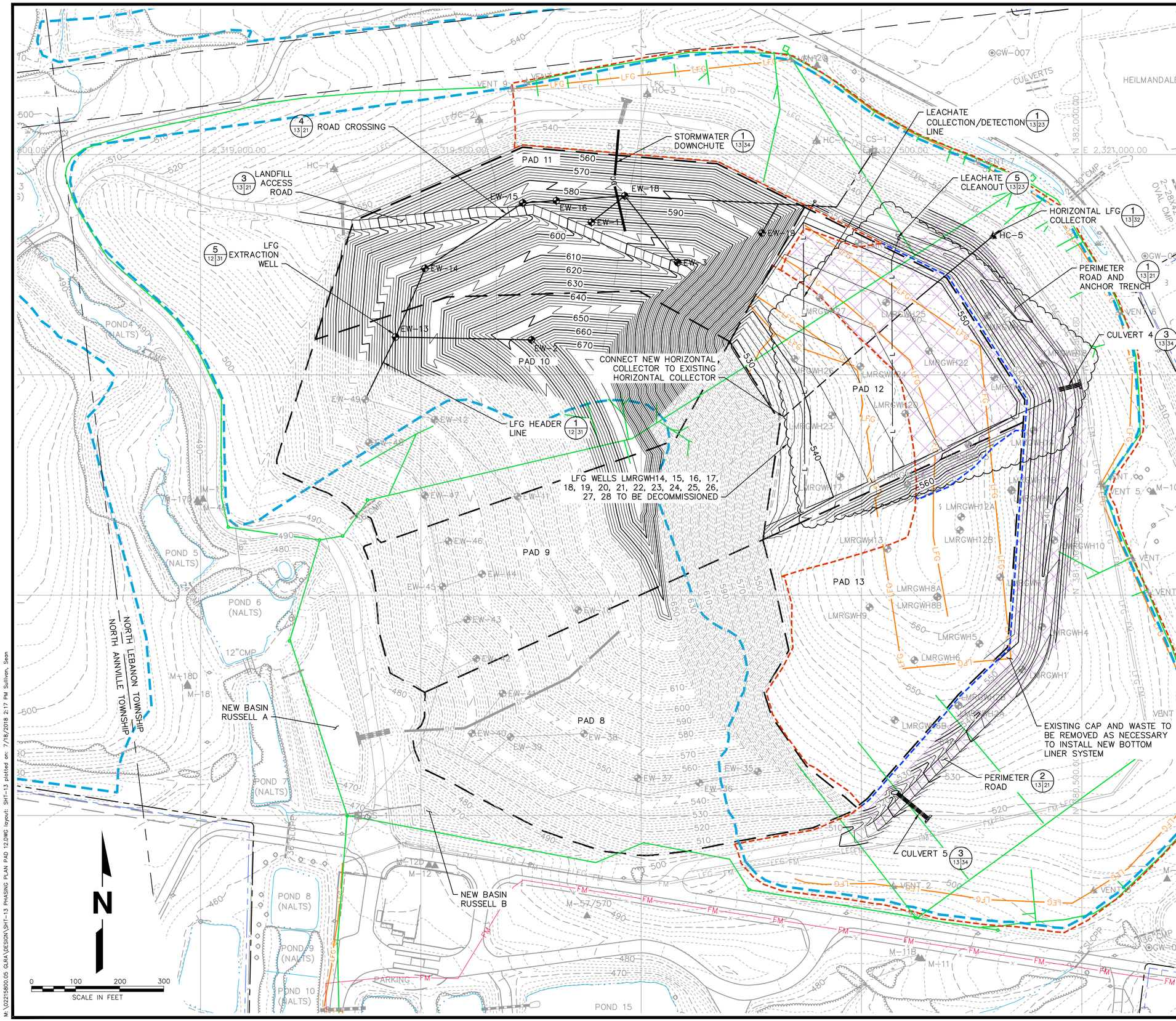

LEGEND

- EXISTING INDEX CONTOUR
- EXISTING INTERMEDIATE CONTOUR
- EXISTING LIMIT OF WASTE
- EXISTING LIMIT OF CAPPED AREA
- EXISTING POND/STREAM
- EXISTING PROPERTY LINE
- PERMIT BOUNDARY
- EXISTING INTERCEPTOR /UNDERDRAIN/GRAVITY MAIN
- FM — EXISTING FORCEMAIN
- LFG — EXISTING LFG TRANSMISSION/VENTING PIPE
- DC — EXISTING DOWNCHUTE
- GW-001 — EXISTING PERIMETER MONITORING PROBE
- VENT 7 — EXISTING PASSIVE VENT
- LMRGWH1 — EXISTING EXTRACTION WELL
- CS-1 — EXISTING CONDENSATE SUMP
- EW-25 — PROPOSED EXTRACTION WELL
- HC-7 — PROPOSED HORIZONTAL COLLECTOR WELLHEAD
- PROPOSED INDEX CONTOUR
- PROPOSED INTERMEDIATE CONTOUR
- PROPOSED PERIMETER/HAUL ROAD
- L — PROPOSED LEACHATE COLLECTION/DETECTION LINE
- PROPOSED HORIZONTAL COLLECTOR
- PROPOSED LFG HEADER/LATERAL
- NEW CAP LIMIT
- PROPOSED PAD LIMIT
- CAP AND WASTE TO BE REMOVED
- DC — PROPOSED DOWNCHUTE

NOTES:

1. PAD 12 VOLUME = 904,000 C.Y. FILL
2. BASE GRADES SHOWN IN PAD 12. TOP OF INTERMEDIATE/FINAL GRADES SHOWN IN PADS 8–11.

COMMONWEALTH OF PENNSYLVANIA REGISTERED PROFESSIONAL ENGINEER DENISE WESSELS

NO.	REVISION	DATE

SHEET TITLE: PHASING PLAN - PAD 12

PROJECT TITLE: HEILMANDALE EXPANSION PHASE II PERMIT MODIFICATION

CLIENT: GREATER LEBANON REFUSE AUTHORITY, 1610 RUSSELL ROAD, LEBANON, PENNSYLVANIA 17046

SCS ENGINEERS
STEARNS, CONRAD AND SCHMIDT CONSULTING ENGINEERS, INC.
22 DENVER ROAD; SUITE E - DENVER, PA 17517
PH. (610) 382-3050 SCSENGINEERS.COM

PROJ. NO. 02215800.05 | DWN. BY: SRS | Q/A RVW BY: DW
DSN. BY: ERS | CHK. BY: DW | APP. BY: DW

CADD FILE: SHT-13
DATE: JULY 2018
SCALE: 1"=100'
DRAWING NO. 13 of 36

M:\02215800.05 GLRA\DESIGN\SHT-13 PHASING PLAN PAD 12.DWG layout: SHT-13 plotted on: 7/16/2018 2:17 PM Sullivan, Sean

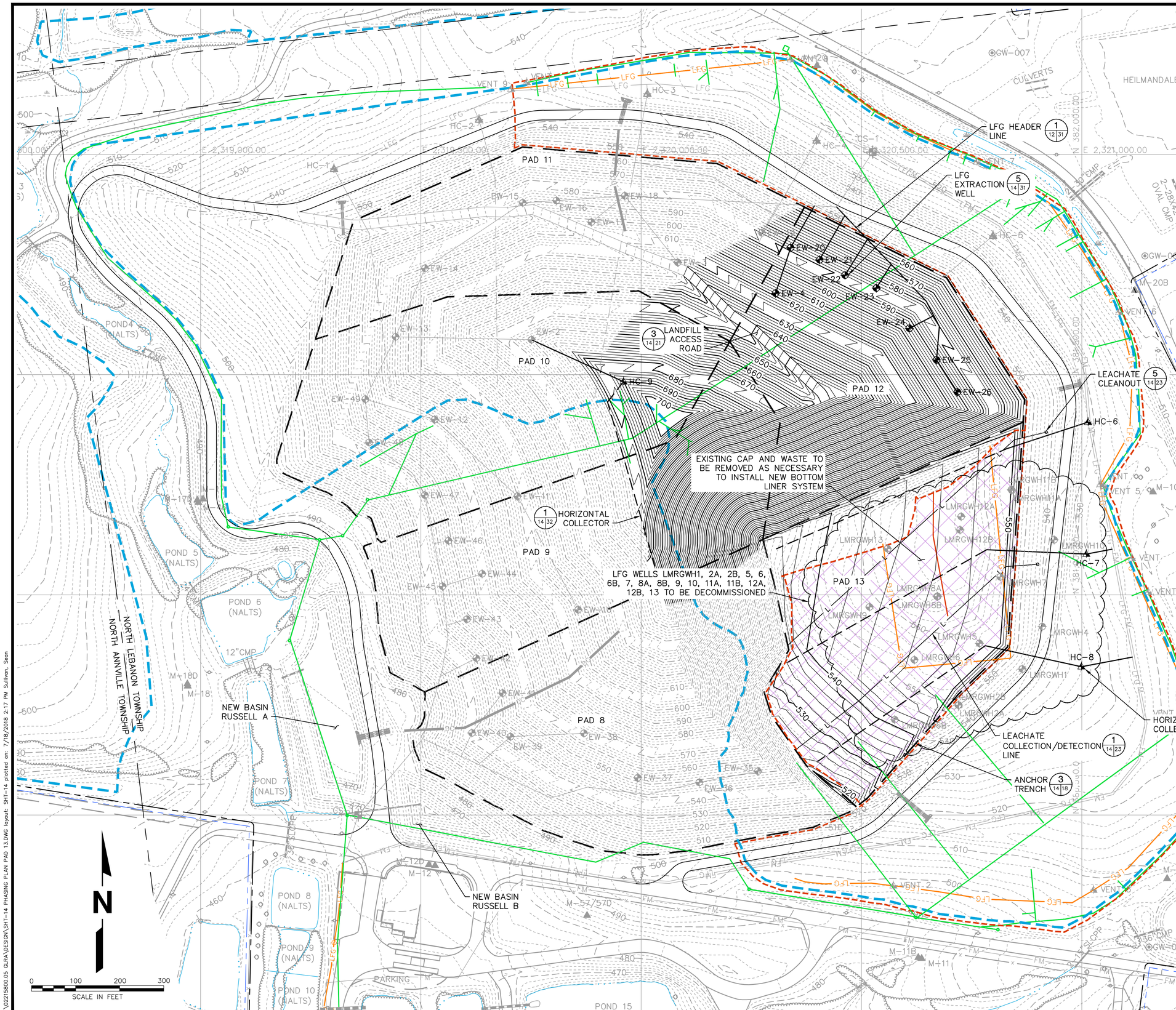

LEGEND

- EXISTING INDEX CONTOUR
- EXISTING INTERMEDIATE CONTOUR
- EXISTING LIMIT OF WASTE
- EXISTING LIMIT OF CAPPED AREA
- EXISTING POND/STREAM
- EXISTING PROPERTY LINE
- PERMIT BOUNDARY
- EXISTING INTERCEPTOR /UNDERDRAIN/GRAVITY MAIN
- FM — EXISTING FORCEMAIN
- LFG — EXISTING LFG TRANSMISSION/VENTING PIPE
- DC — EXISTING DOWNCHUTE
- GW-001 — EXISTING PERIMETER MONITORING PROBE
- VENT 7 — EXISTING PASSIVE VENT
- LMRGWH1 — EXISTING EXTRACTION WELL
- CS-1 — EXISTING CONDENSATE SUMP
- EW-25 — PROPOSED EXTRACTION WELL
- HC-7 — PROPOSED HORIZONTAL COLLECTOR WELLHEAD
- PROPOSED INDEX CONTOUR
- PROPOSED INTERMEDIATE CONTOUR
- PROPOSED PERIMETER/HAUL ROAD
- L — PROPOSED LEACHATE COLLECTION/DETECTION LINE
- PROPOSED HORIZONTAL COLLECTOR
- PROPOSED LFG HEADER/LATERAL
- PROPOSED PAD LIMIT
- CAP AND WASTE TO BE REMOVED

NOTES:

1. PAD 13 VOLUME = 1,328,000 C.Y. FILL
2. BASE GRADES SHOWN IN PAD 13. TOP OF INTERMEDIATE/FINAL GRADES SHOWN IN PADS 8–12.

COMMONWEALTH OF PENNSYLVANIA
REGISTERED PROFESSIONAL ENGINEER
DENISE WESSELS

NO.	REVISION	DATE

SHEET TITLE: **PHASING PLAN - PAD 13**

PROJECT TITLE: **HEILMANDALE EXPANSION PHASE II PERMIT MODIFICATION**

CLIENT: **GREATER LEBANON REFUSE AUTHORITY**
1610 RUSSELL ROAD
LEBANON, PENNSYLVANIA 17046

SCS ENGINEERS
STEARNS, CONRAD AND SCHMIDT CONSULTING ENGINEERS, INC.
22 DENVER ROAD; SUITE E - DENVER, PA 17517
PH. (610) 382-3050 SCSENGINEERS.COM

PROJ. NO. 02215800.05 | DWN. BY: SRS | Q/A RVW BY: DW
DSN. BY: ERS | CHK. BY: DW | APP. BY: DW

CADD FILE: SHT-14
DATE: JULY 2018
SCALE: 1"=100'
DRAWING NO. **14** of **36**

M:\02215800.05 GLRA\DESIGN\SHT-14 PHASING PLAN PAD 13.DWG layout: SHT-14 plotted on: 7/18/2018 2:17 PM Sullivan, Sean

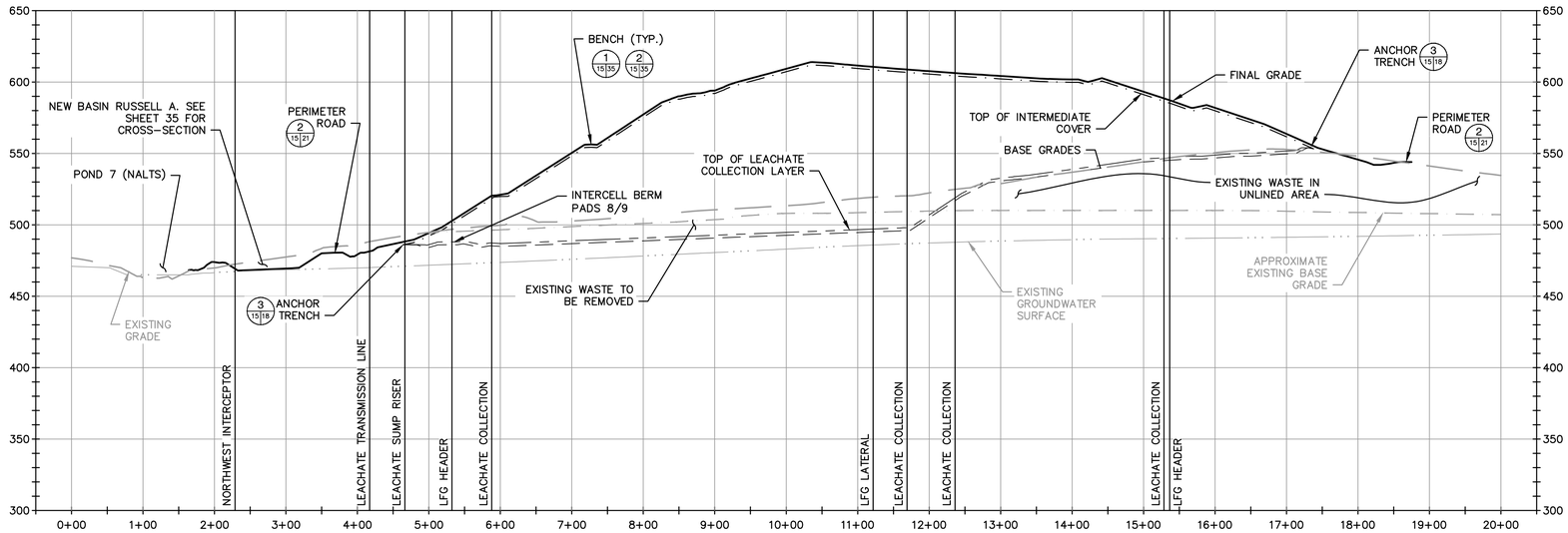

A–A PROFILE

NOTE:

EXISTING BASE GRADES ARE SHOWN AS APPROXIMATE. GRADES HAVE BEEN INTERPOLATED FROM MINING STUDY

HORIZONTAL

0 100 200 300

SCALE IN FEET

VERTICAL

0 50 100 150

SCALE IN FEET

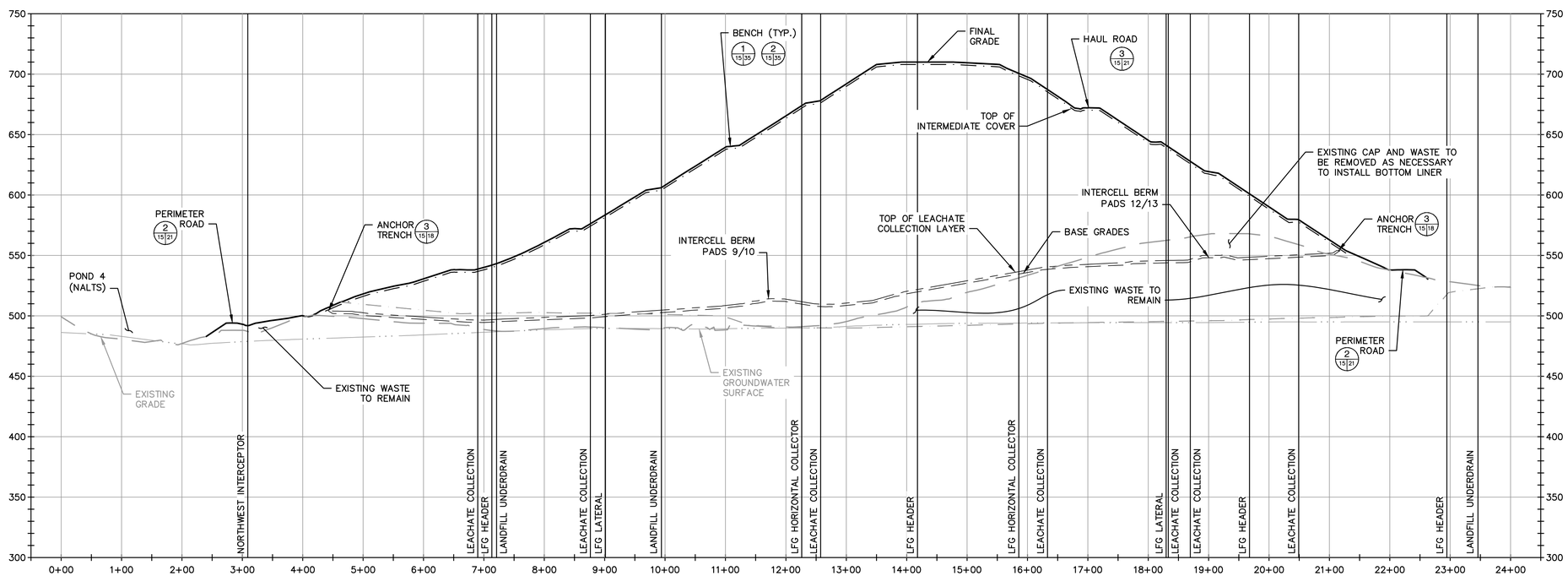

B–B PROFILE

COMMONWEALTH OF PENNSYLVANIA
REGISTERED PROFESSIONAL
DENISE WESSELS
ENGINEER

NO.	REVISION	DATE

SHEET TITLE: LANDFILL CROSS-SECTIONS I

PROJECT TITLE: HEILMANDALE EXPANSION PHASE II PERMIT MODIFICATION

CLIENT: GREATER LEBANON REFUSE AUTHORITY
1610 RUSSELL ROAD
LEBANON, PENNSYLVANIA 17046

SCS ENGINEERS
STEARNS, CONRAD AND SCHMIDT CONSULTING ENGINEERS, INC.
22 DENVER ROAD; SUITE E - DENVER, PA 17517
PH. (610) 382-3050 SCSENGINEERS.COM

PROJ. NO. 02215800.05 | DWN. BY: SRS | Q/A RVW BY: DW
DSN. BY: ERS | CHK. BY: DW | APP. BY: DW

CADD FILE: SHT–15

DATE: JULY 2018

SCALE: AS SHOWN

DRAWING NO. 15 of 36

M:\02215800.05 GLRA\DESIGN\SHT-15-17 LANDFILL CROSS SECTIONS.DWG layout: SHT-15 plotted on: 7/18/2018 2:24 PM Sullivan, Sean

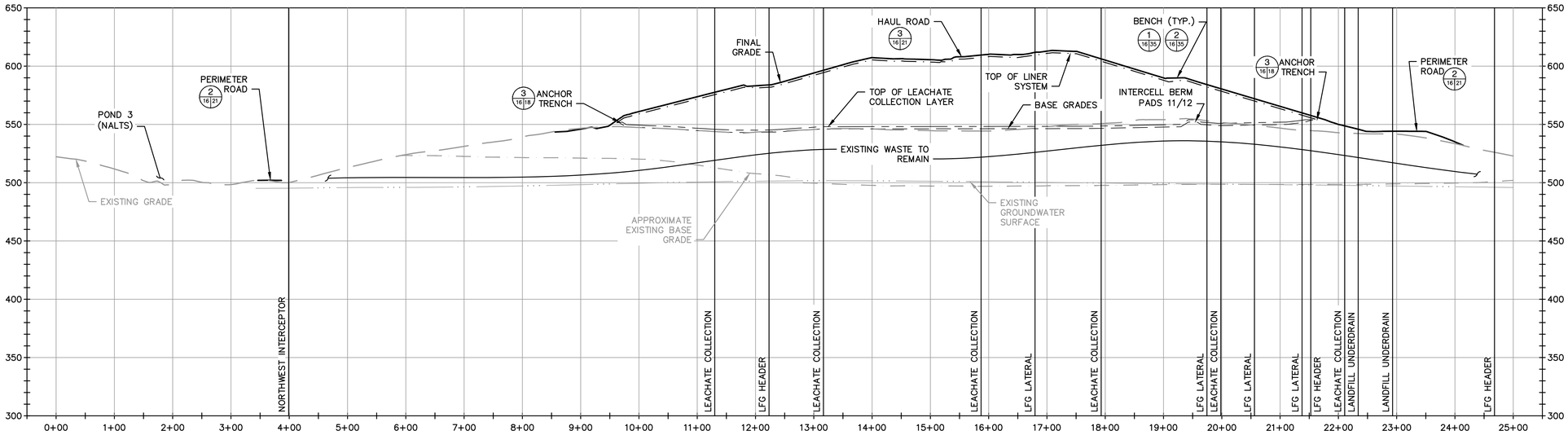

C–C PROFILE

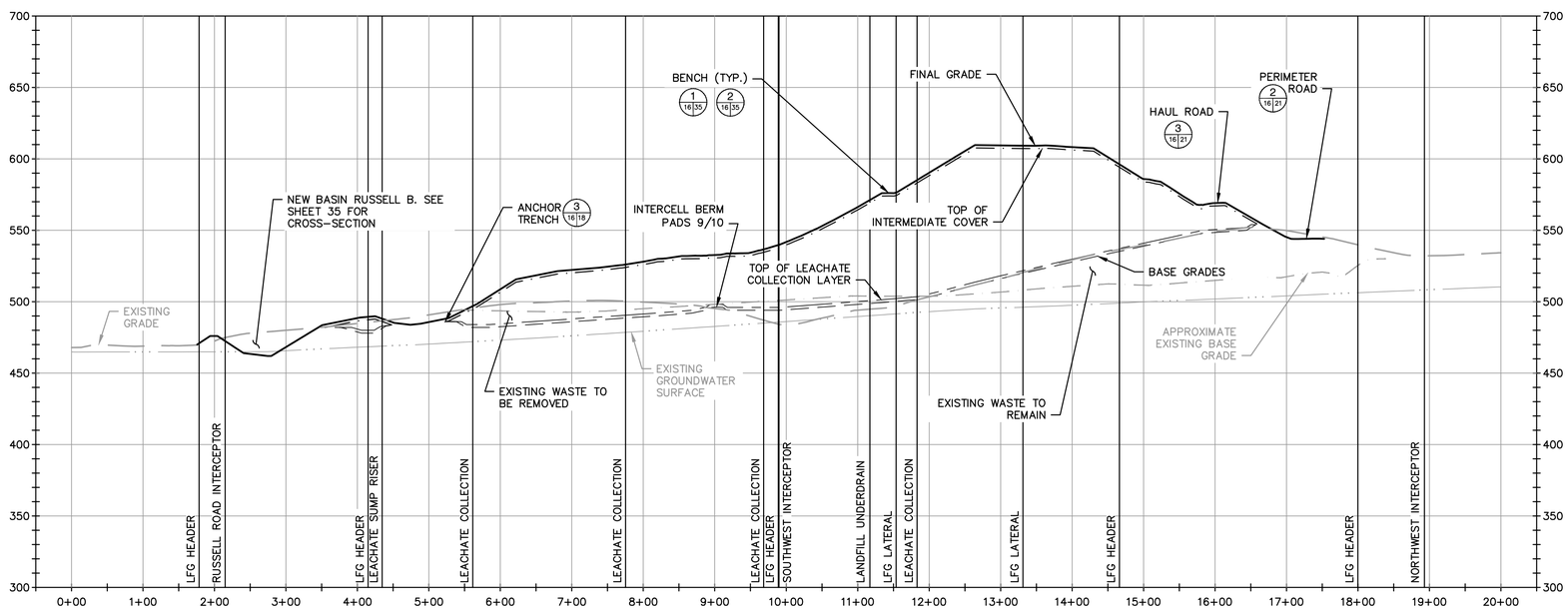

D–D PROFILE

HORIZONTAL

0 100 200 300

SCALE IN FEET

VERTICAL

0 50 100 150

SCALE IN FEET

NOTE:

EXISTING BASE GRADES ARE SHOWN AS APPROXIMATE. GRADES HAVE BEEN INTERPOLATED FROM MINING STUDY

COMMONWEALTH OF PENNSYLVANIA
REGISTERED PROFESSIONAL ENGINEER
DENISE WESSELS

NO.	REVISION	DATE

SHEET TITLE: LANDFILL CROSS-SECTIONS II

PROJECT TITLE: HEILMANDALE EXPANSION PHASE II PERMIT MODIFICATION

CLIENT: GREATER LEBANON REFUSE AUTHORITY
1610 RUSSELL ROAD
LEBANON, PENNSYLVANIA 17046

SCS ENGINEERS
STEARNS, CONRAD AND SCHMIDT CONSULTING ENGINEERS, INC.
22 DENVER ROAD; SUITE E - DENVER, PA 17517
PH. (610) 382-3050 SCSENGINEERS.COM

PROJ. NO. 02215800.05 | DSN. BY: ERS | DWN. BY: SRS | CHK. BY: DW | Q/A RVW BY: DW | APP. BY: DW

CADD FILE: SHT–16

DATE: JULY 2018

SCALE: AS SHOWN

DRAWING NO. 16 of 36

M:\02215800.05 GLRA\DESIGN\SHT-15-17 LANDFILL CROSS SECTIONS.DWG layout: SHT-16 plotted on: 7/18/2018 2:24 PM Sullivan, Sean

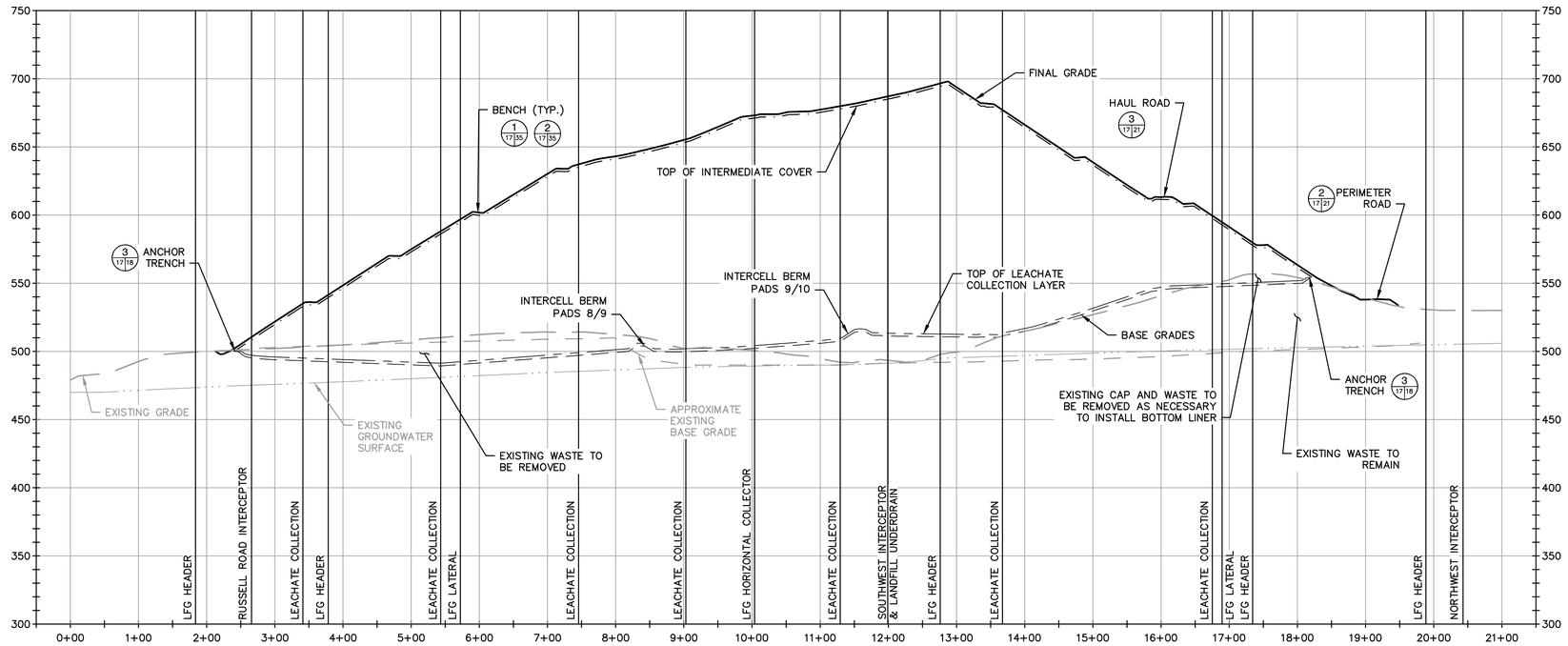

E–E PROFILE

HORIZONTAL

0 100 200 300

SCALE IN FEET

VERTICAL

0 50 100 150

SCALE IN FEET

NOTE:

EXISTING BASE GRADES ARE SHOWN AS APPROXIMATE. GRADES HAVE BEEN INTERPOLATED FROM MINING STUDY

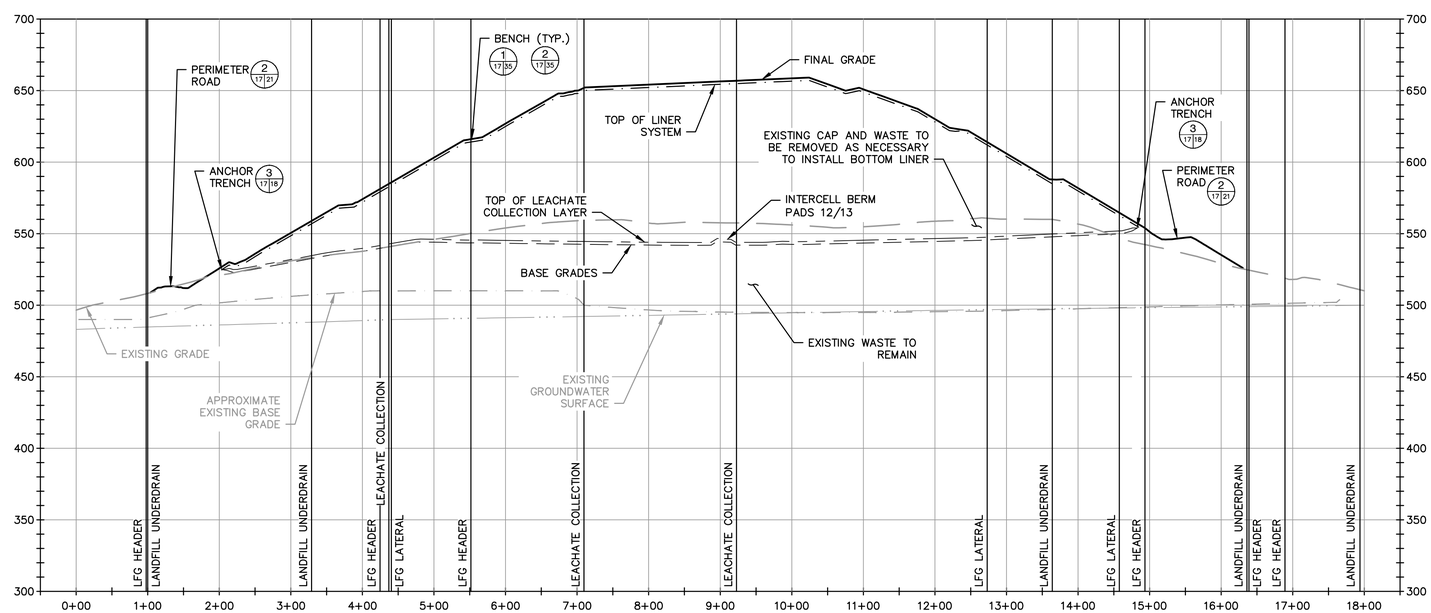

F–F PROFILE

COMMONWEALTH OF PENNSYLVANIA
REGISTERED PROFESSIONAL
DENISE WESSELS
ENGINEER

NO.	REVISION	DATE

SHEET TITLE: LANDFILL CROSS-SECTIONS III

PROJECT TITLE: HEILMANDALE EXPANSION PHASE II PERMIT MODIFICATION

CLIENT: GREATER LEBANON REFUSE AUTHORITY
1610 RUSSELL ROAD
LEBANON, PENNSYLVANIA 17046

SCS ENGINEERS
STEARNS, CONRAD AND SCHMIDT CONSULTING ENGINEERS, INC.
22 DENVER ROAD; SUITE E - DENVER, PA 17517
PH. (610) 382-3050 SCSENGINEERS.COM

PROJ. NO. 02215800.05 | DWN. BY: SRS | Q/A RVW BY: DW
DSN. BY: ERS | CHK. BY: DW | APP. BY: DW

CADD FILE: SHT–17

DATE: JULY 2018

SCALE: AS SHOWN

DRAWING NO. 17 of 36

M:\02215800.05 GLRA\DESIGN\SHT-15-17 LANDFILL CROSS SECTIONS.DWG layout: SHT-17 plotted on: 7/18/2018 2:24 PM Sullivan, Sean

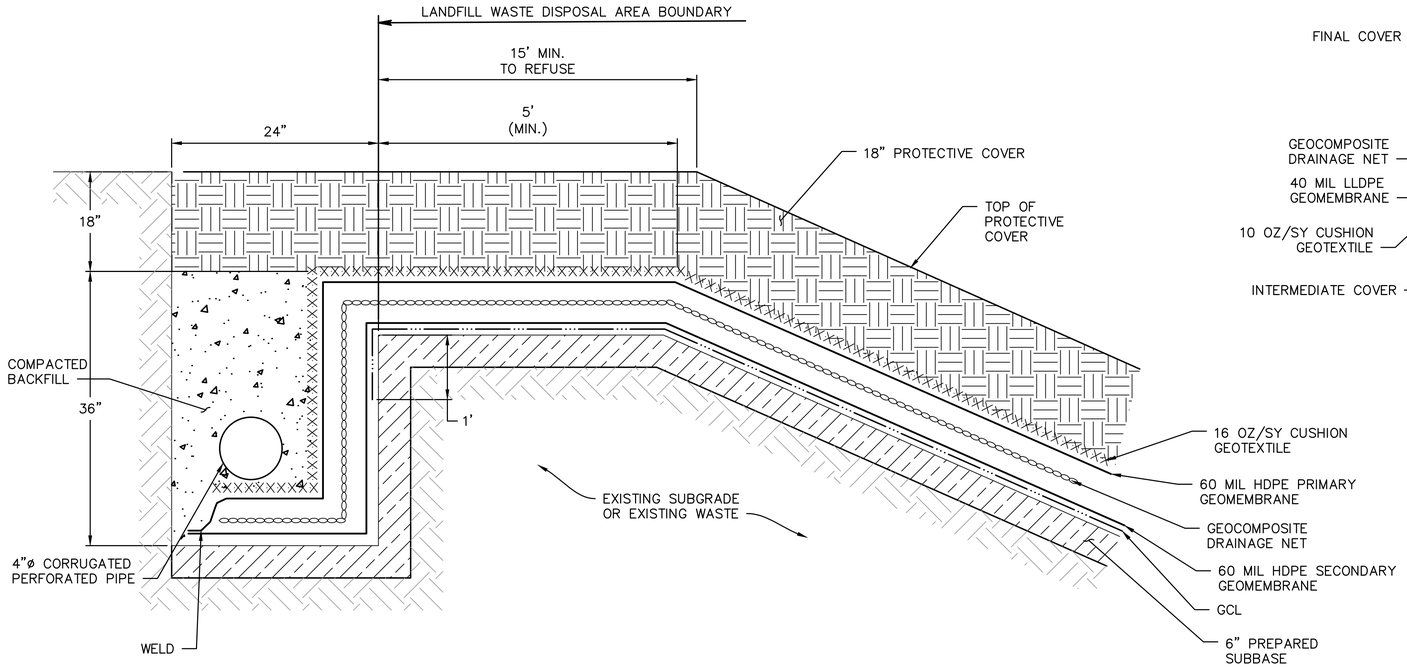

ANCHOR TRENCH (3 / 18)
NOT TO SCALE 10,11,12,14,21,24

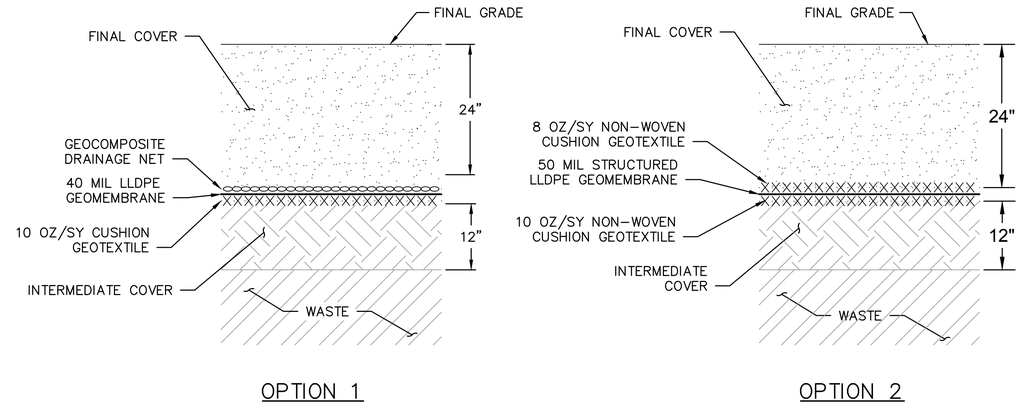

FINAL COVER SYSTEM (1 / 18)
NOT TO SCALE

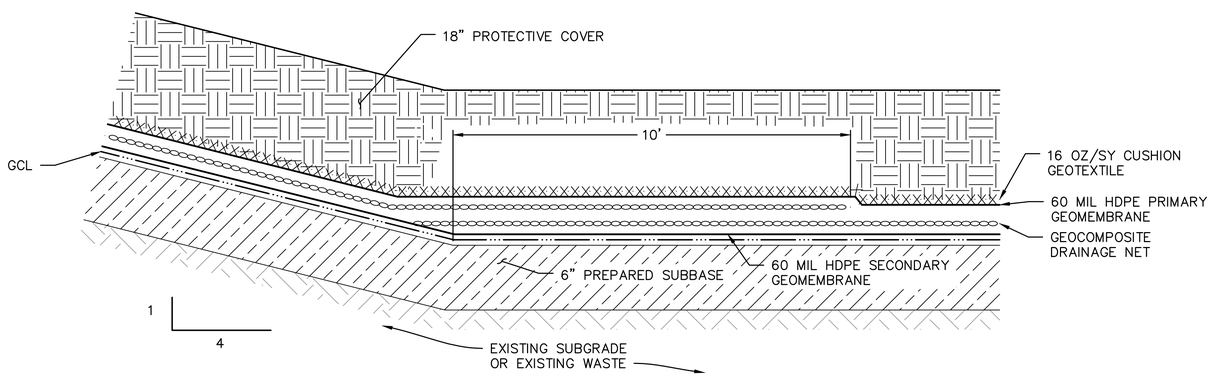

BOTTOM LINER SYSTEM WITH SIDE SLOPE (4 / 18 18)
NOT TO SCALE

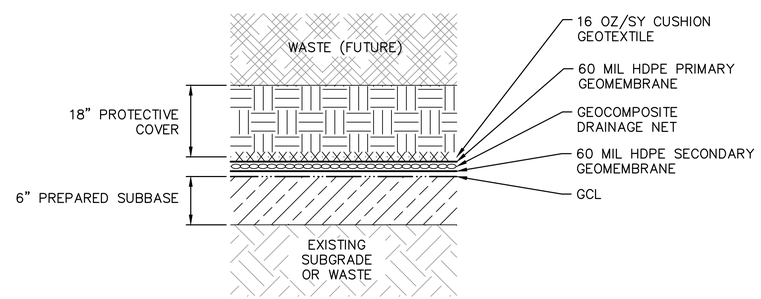

BOTTOM LINER SYSTEM (2 / 18 18)
NOT TO SCALE

COMMONWEALTH OF PENNSYLVANIA
REGISTERED PROFESSIONAL
DENISE WESSELS
ENGINEER

NO.	REVISION	DATE

SHEET TITLE: **LINER SYSTEM DETAILS**

PROJECT TITLE: **HEILMANDALE EXPANSION PHASE II PERMIT MODIFICATION**

CLIENT: **GREATER LEBANON REFUSE AUTHORITY**
1610 RUSSELL ROAD
LEBANON, PENNSYLVANIA 17046

SCS ENGINEERS
STEARNS, CONRAD AND SCHMIDT
CONSULTING ENGINEERS, INC.
22 DENVER ROAD; SUITE E - DENVER, PA 17517
PH. (610) 382-3050 SCSENGINEERS.COM

PROJ. NO. 02215800.05 | DSN. BY: ERS | DWN. BY: SRS | CHK. BY: DW | Q/A RVW BY: DW | APP. BY: DW

CADD FILE: SHT-18
DATE: JULY 2018
SCALE: AS SHOWN
DRAWING NO. 18 of 36

M:\02215800.05 GLRA\DESIGN\SHT-18 LINER SYSTEM DETAILS.DWG layout: SHEET 18 plotted on: 7/18/2018 2:25 PM Sullivan, Sean

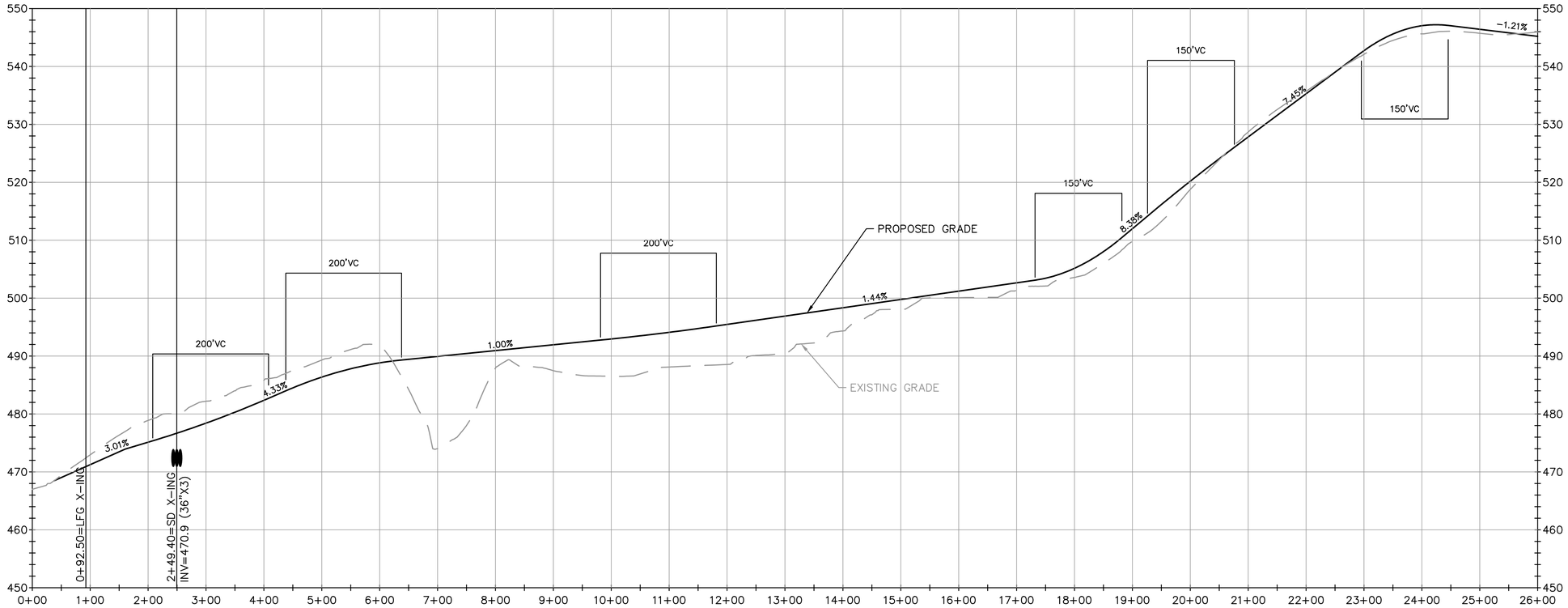

PERIMETER ROAD PROFILE
STATION 0+00 TO 26+00
SCALE: HORIZ. 1"=100'
VERT. 1"=10'

NOTE:

1. SEE SHEET 7 FOR STATIONING
2. VC = VERTICAL CURVE

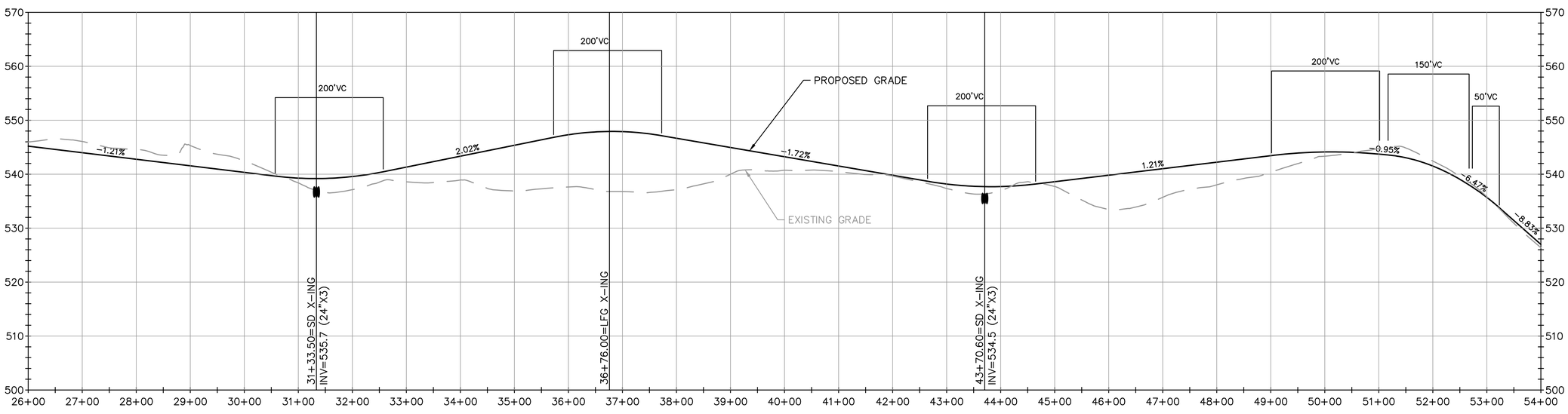

PERIMETER ROAD PROFILE
STATION 26+00 TO 54+00
SCALE: HORIZ. 1"=100'
VERT. 1"=10'

COMMONWEALTH OF PENNSYLVANIA
REGISTERED PROFESSIONAL
DENISE WESSELS
ENGINEER

NO.	REVISION	DATE

SHEET TITLE: **PERIMETER ROAD PROFILE**

PROJECT TITLE: **HEILMANDALE EXPANSION PHASE II PERMIT MODIFICATION**

CLIENT: **GREATER LEBANON REFUSE AUTHORITY**
1610 RUSSELL ROAD
LEBANON, PENNSYLVANIA 17046

SCS ENGINEERS
STEARNS, CONRAD AND SCHMIDT CONSULTING ENGINEERS, INC.
22 DENVER ROAD; SUITE E - DENVER, PA 17517
PH. (610) 382-3050 SCSENGINEERS.COM

PROJ. NO. 02215800.05 | DSN. BY: ERS | DWN. BY: SRS | CHK. BY: DW | Q/A RVW BY: DW | APP. BY: DW

CADD FILE: SHT-19

DATE: JULY 2018

SCALE: AS SHOWN

DRAWING NO. **19** of **36**

M:\02215800.05 GLRA\DESIGN\SHT-19-20 ROAD PROFILES.DWG layout: SHT-19 plotted on: 7/18/2018 2:26 PM Sullivan, Sean

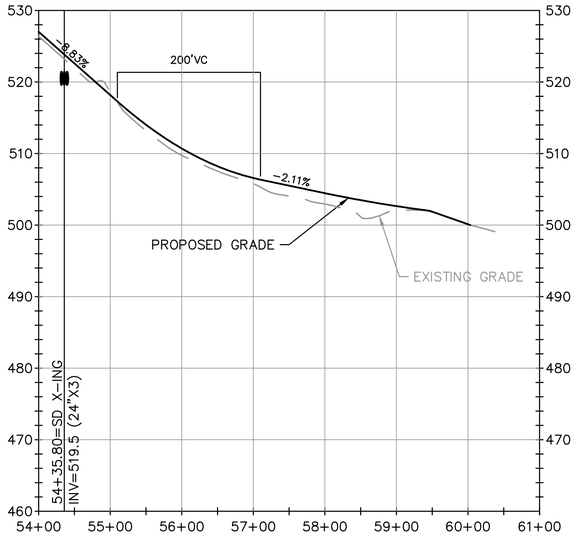

PERIMETER ROAD PROFILE

STATION 54+00 TO 66+88
SCALE: HORIZ. 1"=100'
VERT. 1"=10'

NOTE: SEE SHEET 7 FOR STATIONING

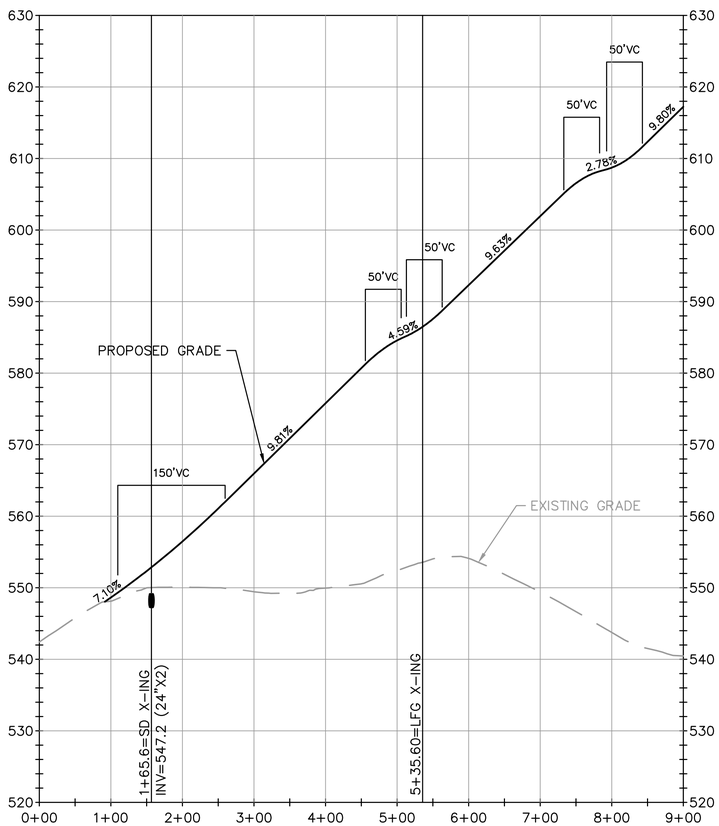

LANDFILL ACCESS ROAD PROFILE

STATION 0+00 TO 9+00
SCALE: HORIZ. 1"=100'
VERT. 1"=10'

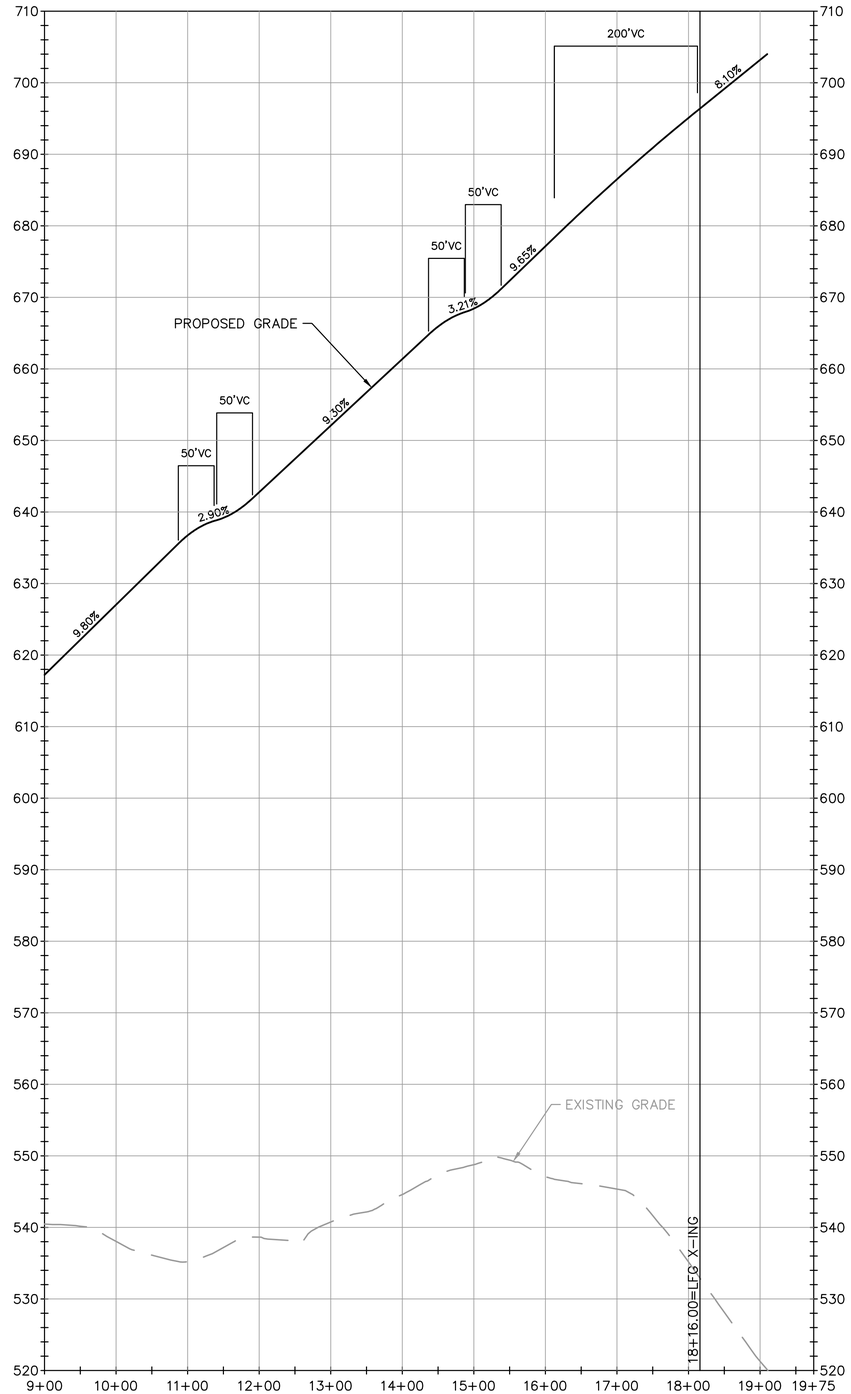

LANDFILL ACCESS ROAD PROFILE

STATION 9+00 TO 19+25
SCALE: HORIZ. 1"=100'
VERT. 1"=10'

COMMONWEALTH OF PENNSYLVANIA
REGISTERED PROFESSIONAL
DENISE WESSELS
ENGINEER

NO.	REVISION	DATE
△		
△		
△		
△		
△		
△		

SHEET TITLE: PERIMETER AND LANDFILL ACCESS ROAD PROFILE

PROJECT TITLE: HEILMANDALE EXPANSION PHASE II PERMIT MODIFICATION

CLIENT: GREATER LEBANON REFUSE AUTHORITY
1610 RUSSELL ROAD
LEBANON, PENNSYLVANIA 17046

SCS ENGINEERS
STEARNS, CONRAD AND SCHMIDT CONSULTING ENGINEERS, INC.
22 DENVER ROAD, SUITE E - DENVER, PA 17517
PH. (610) 382-3050 SCSENGINEERS.COM

PROJ. NO. 02215800.05 | DWN. BY: SRS | Q/A RVW BY: DW
DSN. BY: ERS | CHK. BY: DW | APP. BY: DW

CADD FILE: SHT-20

DATE: JULY 2018

SCALE: AS SHOWN

DRAWING NO. 20 of 36

M:\02215800.05 GLRA\DESIGN\SHT-19-20 ROAD PROFILES.DWG layout: SHT-20 plotted on: 7/18/2018 2:28 PM Sullivan, Sean

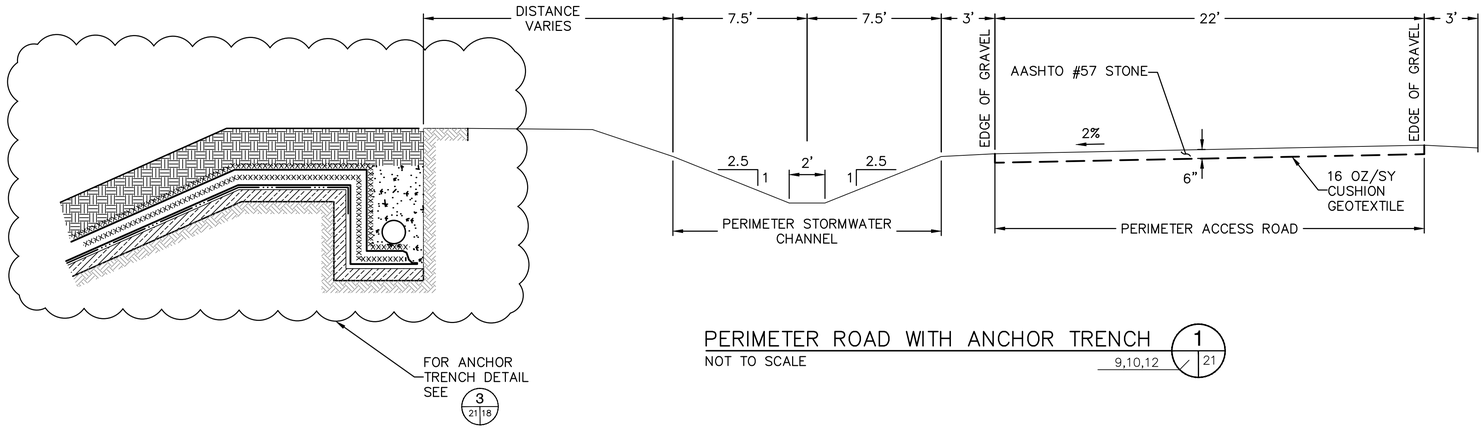

PERIMETER ROAD WITH ANCHOR TRENCH (1)
NOT TO SCALE — 9,10,12 / 21

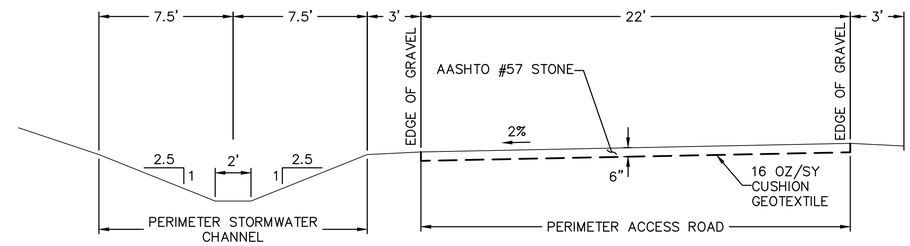

PERIMETER ROAD (2)
NOT TO SCALE — 9,11,12,13 / 21

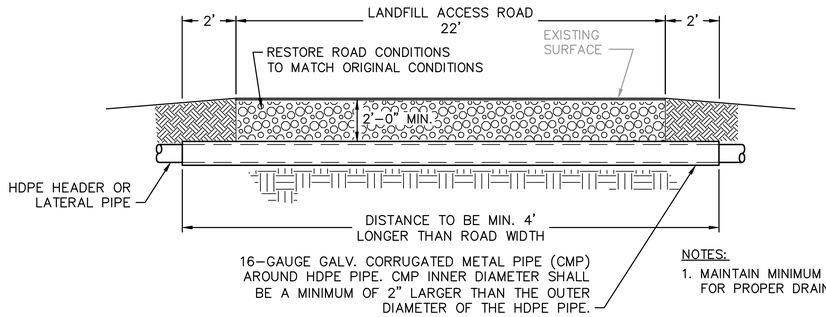

NOTES:
1. MAINTAIN MINIMUM PIPE SLOPES FOR PROPER DRAINAGE

ROAD CROSSING DETAIL (4)
NO SCALE — 13,14,29 / 21

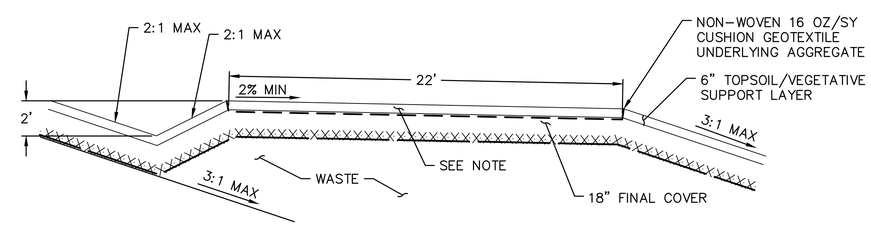

NOTE:
FOR LANDFILL ACCESS ROAD, APPROVED AGGREGATE WILL REPLACE 6" TOPSOIL LAYER.

LANDFILL ACCESS ROAD DETAIL (3)
SCALE: 1"=4' — 13,14 / 21

COMMONWEALTH OF PENNSYLVANIA — REGISTERED PROFESSIONAL ENGINEER — DENISE WESSELS

NO.	REVISION	DATE

SHEET TITLE: PERIMETER & HAUL ROAD DETAILS

PROJECT TITLE: HEILMANDALE EXPANSION PHASE II PERMIT MODIFICATION

CLIENT: GREATER LEBANON REFUSE AUTHORITY, 1610 RUSSELL ROAD, LEBANON, PENNSYLVANIA 17046

SCS ENGINEERS
STEARNS, CONRAD AND SCHMIDT CONSULTING ENGINEERS, INC.
22 DENVER ROAD; SUITE E - DENVER, PA 17517
PH. (610) 382-3050 SCSENGINEERS.COM

PROJ. NO. 02215800.05 | DWN. BY: SRS | Q/A RVW BY: DW
DSN. BY: ERS | CHK. BY: DW | APP. BY: DW

CADD FILE: SHT-21
DATE: JULY 2018
SCALE: AS SHOWN
DRAWING NO. 21 of 36

M:\02215800.05 GLRA\DESIGN\SHT-21 PERIMETER & HAUL ROAD DETAILS.DWG layout: SHEET 21 plotted on: 7/18/2018 2:28 PM Sullivan, Sean

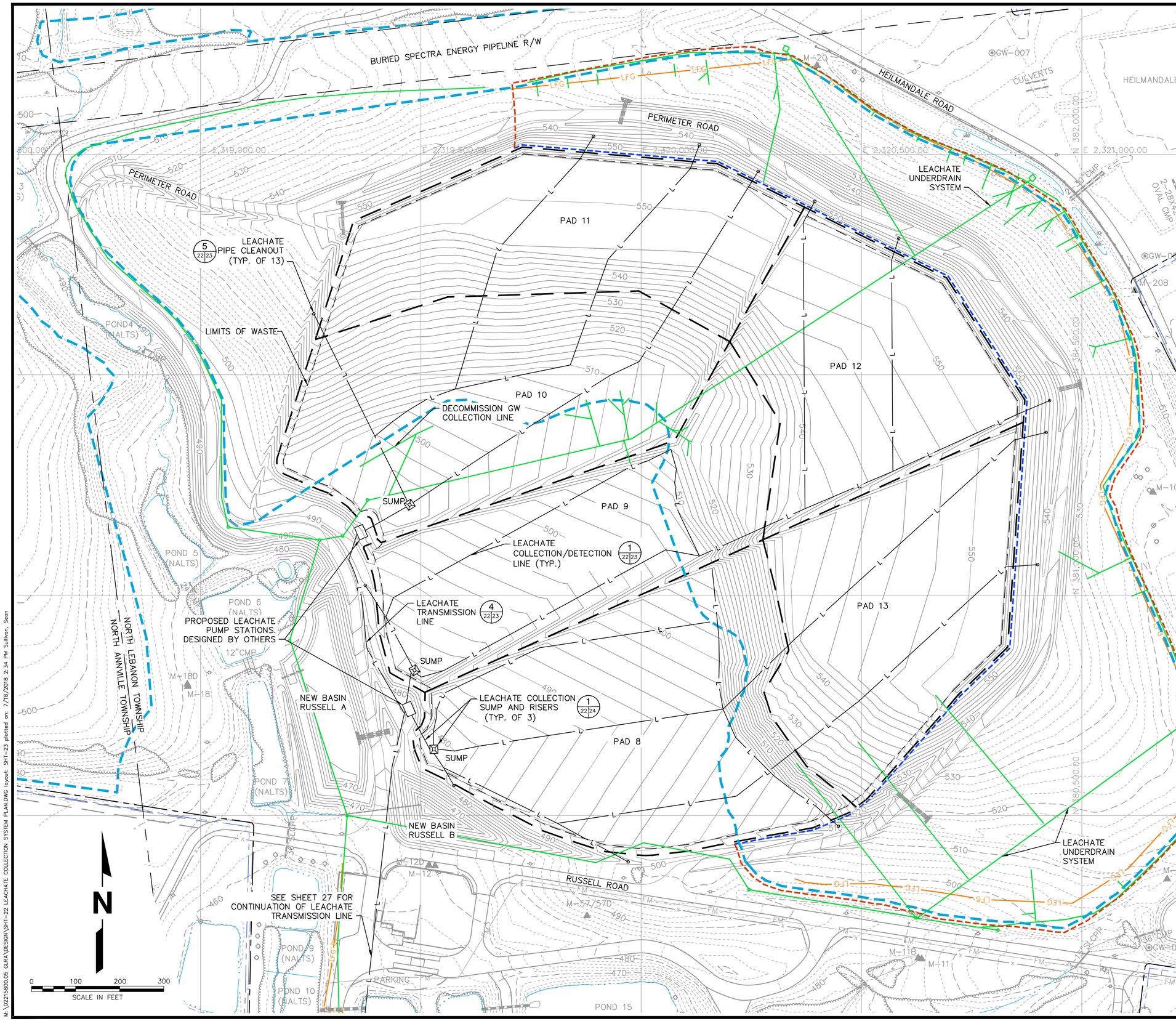

LEGEND

- EXISTING INDEX CONTOUR
- EXISTING INTERMEDIATE CONTOUR
- EXISTING LIMIT OF WASTE
- EXISTING LIMIT OF CAPPED AREA
- EXISTING PROPERTY LINE
- PERMIT BOUNDARY
- EXISTING EASEMENT
- EXISTING TOWNSHIP LINE
- EXISTING POND/STREAM
- EXISTING STORM DRAIN
- EXISTING INTERCEPTOR /UNDERDRAIN/GRAVITY MAIN
- FM — EXISTING FORCEMAIN
- LFG — EXISTING LFG TRANSMISSION/VENTING PIPE
- GW-001 — EXISTING PERIMETER MONITORING PROBE
- M-3 — EXISTING GROUNDWATER MONITORING WELL
- PROPOSED INDEX CONTOUR
- PROPOSED INTERMEDIATE CONTOUR
- PROPOSED PERIMETER/HAUL ROAD
- PROPOSED LIMIT OF NEW WASTE
- PROPOSED PAD LIMIT
- NEW CAPPED LIMIT
- L — PROPOSED LEACHATE COLLECTION/DETECTION LINE

COMMONWEALTH OF PENNSYLVANIA
REGISTERED PROFESSIONAL ENGINEER
DENISE WESSELS

NO.	REVISION	DATE

SHEET TITLE: LEACHATE COLLECTION/ DETECTION SYSTEM PLAN

PROJECT TITLE: HEILMANDALE EXPANSION PHASE II PERMIT MODIFICATION

CLIENT: GREATER LEBANON REFUSE AUTHORITY
1610 RUSSELL ROAD
LEBANON, PENNSYLVANIA 17046

SCS ENGINEERS
STEARNS, CONRAD AND SCHMIDT CONSULTING ENGINEERS, INC.
22 DENVER ROAD; SUITE E - DENVER, PA 17517
PH. (610) 382-3050 SCSENGINEERS.COM

PROJ. NO. 02215800.05 | DWN. BY: SRS | Q/A RVW BY: DW
DSN. BY: SRS | CHK. BY: DW | APP. BY: DW

CADD FILE: SHT-22

DATE: JULY 2018

SCALE: 1"=100'

DRAWING NO. 22 of 36

M:\02215800.05 GLRA\DESIGN\SHT-22 LEACHATE COLLECTION SYSTEM PLAN.DWG layout: SHT-23 plotted on: 7/18/2018 2:34 PM Sullivan, Sean

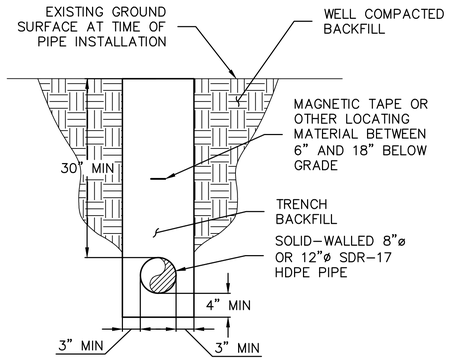

LEACHATE TRANSMISSION PIPE TRENCH DETAIL (4 / 9,11,22,27 / 23)

NOT TO SCALE

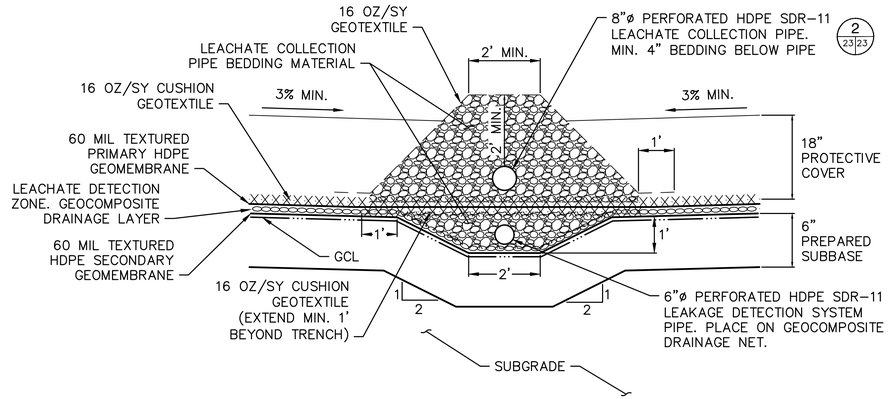

OPTION 1

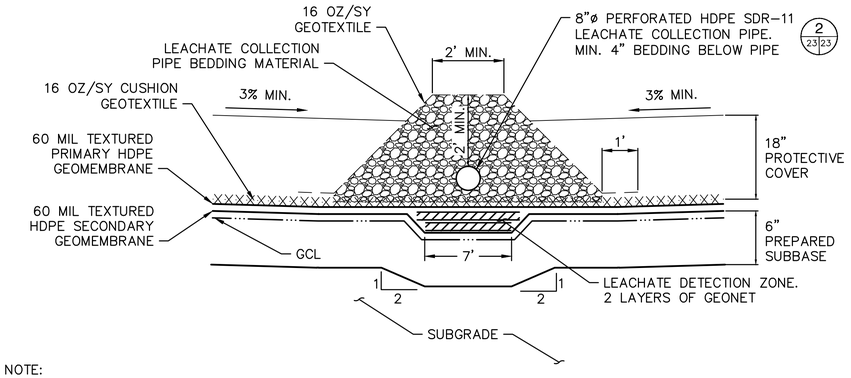

OPTION 2

NOTE:

GLRA WILL SELECT AND INSTALL OPTION 1 OR OPTION 2.

LEACHATE COLLECTION/DETECTION LINES (1 / 9,10,11,12,13,14,22 / 23)

NOT TO SCALE

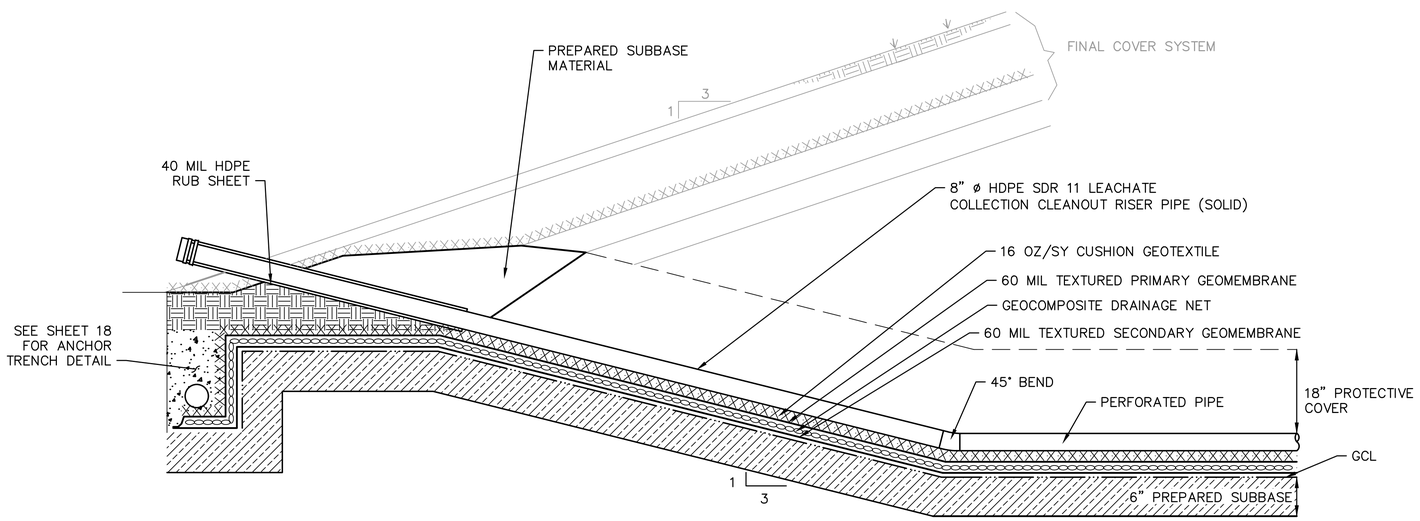

CLEANOUT SUPPORT AND PIPE (5 / 9,10,11,12,13,14,22 / 23)

NOT TO SCALE

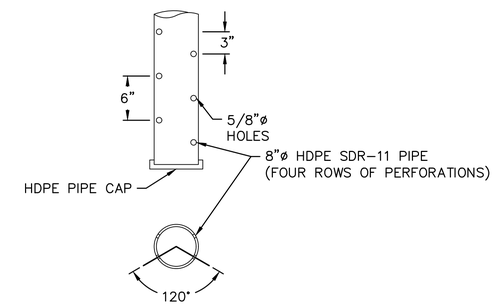

LEACHATE COLLECTION PIPE PERFORATION (2 / 23|23)

NOT TO SCALE

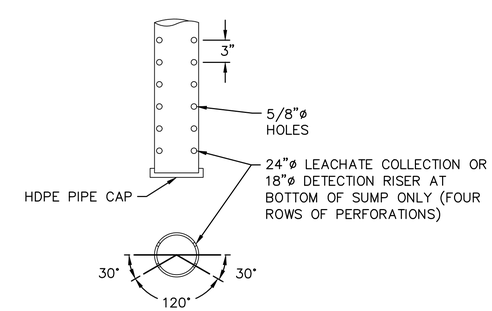

LEACHATE COLLECTION/DETECTION RISER PIPE PERFORATION (3 / 25,26 / 23)

NOT TO SCALE

COMMONWEALTH OF PENNSYLVANIA
REGISTERED PROFESSIONAL ENGINEER
DENISE WESSELS

NO.	REVISION	DATE

SHEET TITLE: LEACHATE COLLECTION SYSTEM DETAILS

PROJECT TITLE: HEILMANDALE EXPANSION PHASE II PERMIT MODIFICATION

CLIENT: GREATER LEBANON REFUSE AUTHORITY, 1610 RUSSELL ROAD, LEBANON, PENNSYLVANIA 17046

SCS ENGINEERS
STEARNS, CONRAD AND SCHMIDT CONSULTING ENGINEERS, INC.
22 DENVER ROAD; SUITE E - DENVER, PA 17517
PH. (610) 382-3050 SCSENGINEERS.COM

PROJ. NO. 02215800.05 | DWN. BY: SRS | Q/A RVW BY: DW | DSN. BY: ERS | CHK. BY: DW | APP. BY: DW

CADD FILE: SHT-23

DATE: JULY 2018

SCALE: AS SHOWN

DRAWING NO. 23 of 36

M:\02215800.05 GLRA\DESIGN\SHT-23-26 LEACHATE COLLECTION SYSTEM DETAILS.DWG layout: LEACHATE DETAILS plotted on: 7/19/2018 2:38 PM Sullivan, Sean

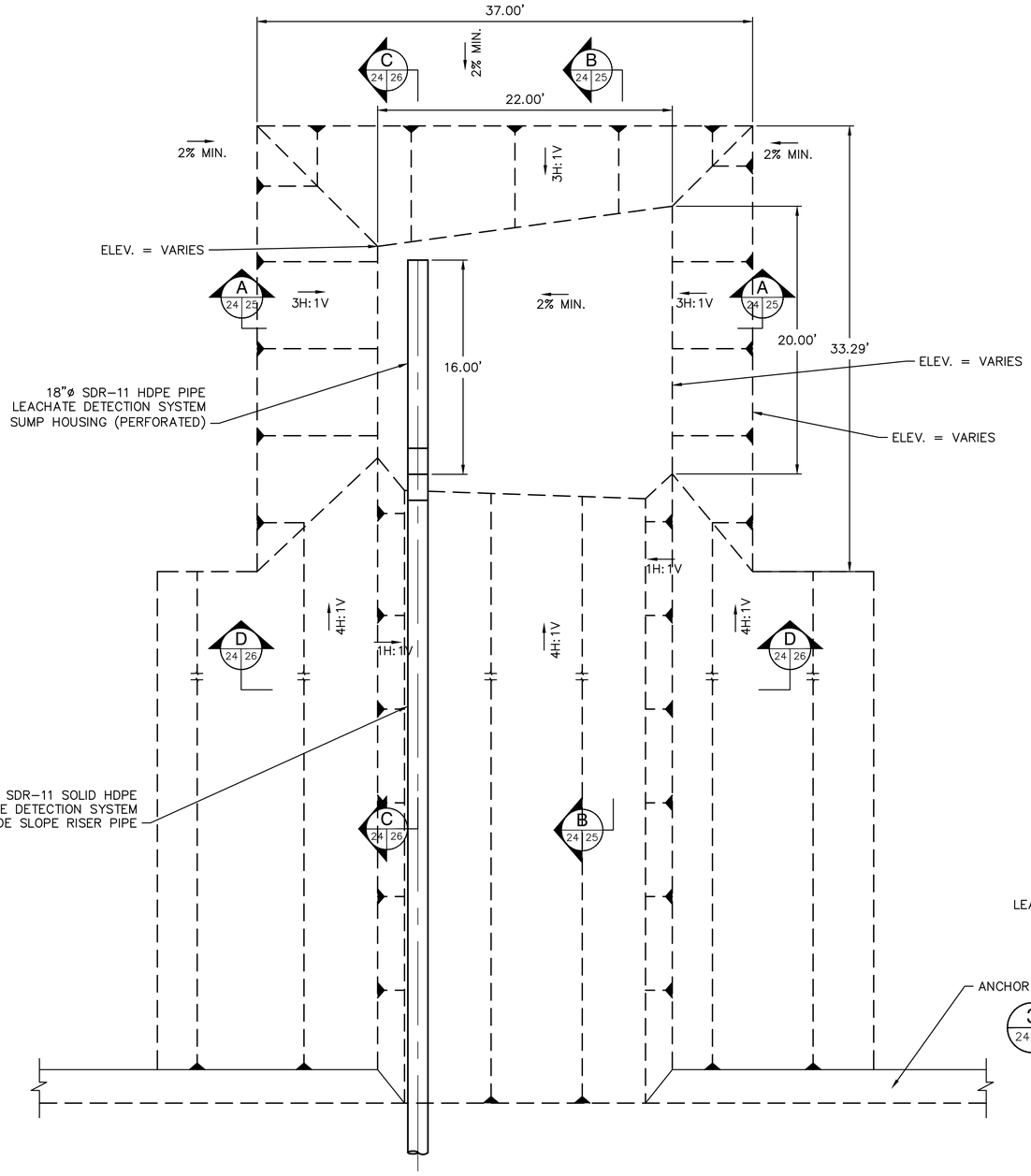

LEACHATE DETECTION SYSTEM SUMP

SCALE: 1" = 5'

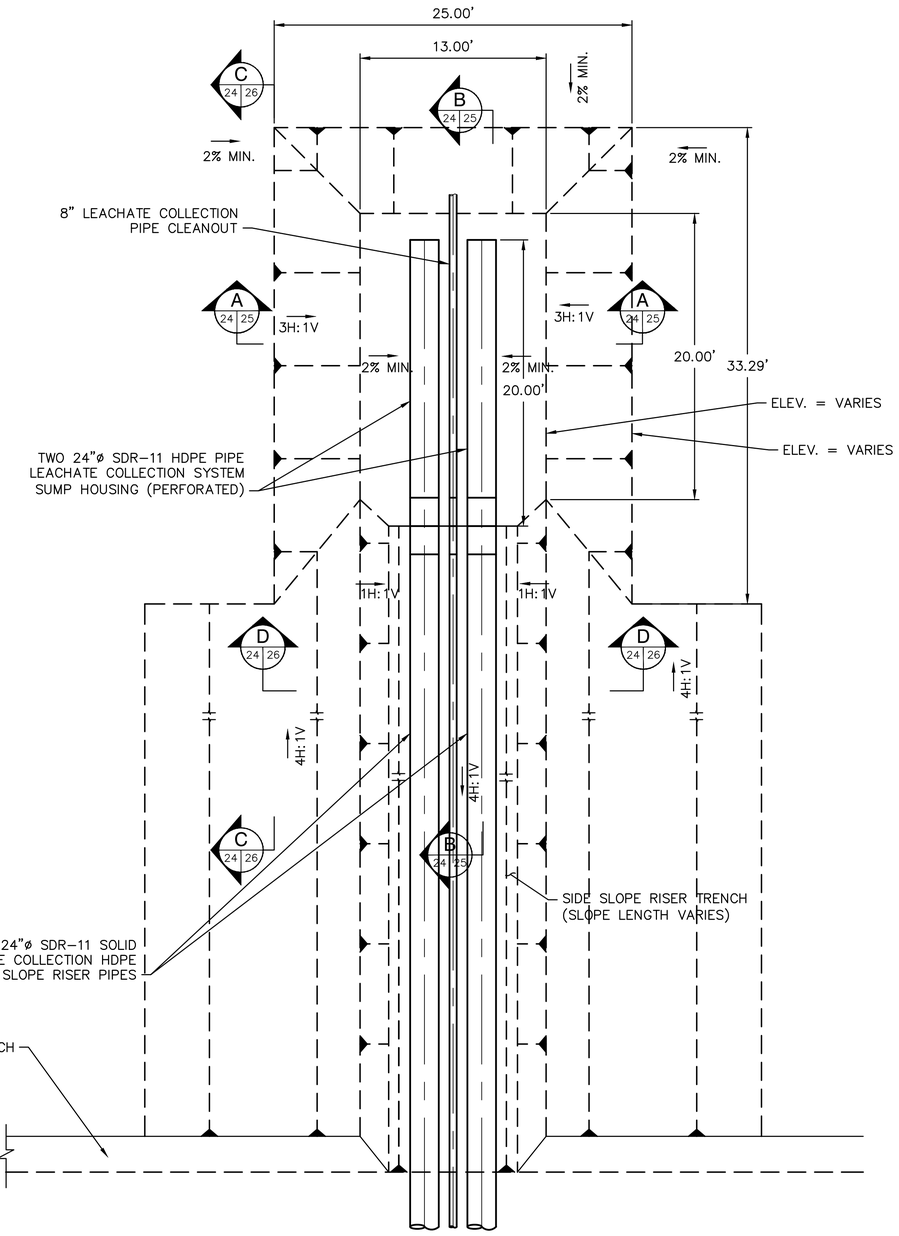

LEACHATE COLLECTION SYSTEM SUMP

1
10 24

SCALE: 1" = 5'

0 5 10 15
SCALE IN FEET

COMMONWEALTH OF PENNSYLVANIA
REGISTERED PROFESSIONAL ENGINEER
DENISE WESSELS

NO.	REVISION	DATE

SHEET TITLE: LEACHATE COLLECTION SUMP PLAN

PROJECT TITLE: HEILMANDALE EXPANSION PHASE II PERMIT MODIFICATION

CLIENT: GREATER LEBANON REFUSE AUTHORITY
1610 RUSSELL ROAD
LEBANON, PENNSYLVANIA 17046

SCS ENGINEERS
STEARNS, CONRAD AND SCHMIDT
CONSULTING ENGINEERS, INC.
22 DENVER ROAD; SUITE E - DENVER, PA 17517
PH. (610) 382-3050 SCSENGINEERS.COM

PROJ. NO. 02215800.05 | DWN. BY: SRS | Q/A RVW BY: DW
DSN. BY: ERS | CHK. BY: DW | APP. BY: DW

CADD FILE: SHT-24

DATE: JULY 2018

SCALE: AS SHOWN

DRAWING NO. 24 of 36

M:\02215800.05 GLRA\DESIGN\SHT-23-26 LEACHATE COLLECTION SYSTEM DETAILS.DWG layout: LEACHATE COLLECTION SUMP plotted on: 7/18/2018 2:42 PM Sullivan, Sean

NOTE:

PROVIDE 6" MIN. AASHTO #57 STONE BENEATH COLLECTION SUMP AREA (TO SLOPE BASE OF COLLECTION SUMP 2% MIN.)

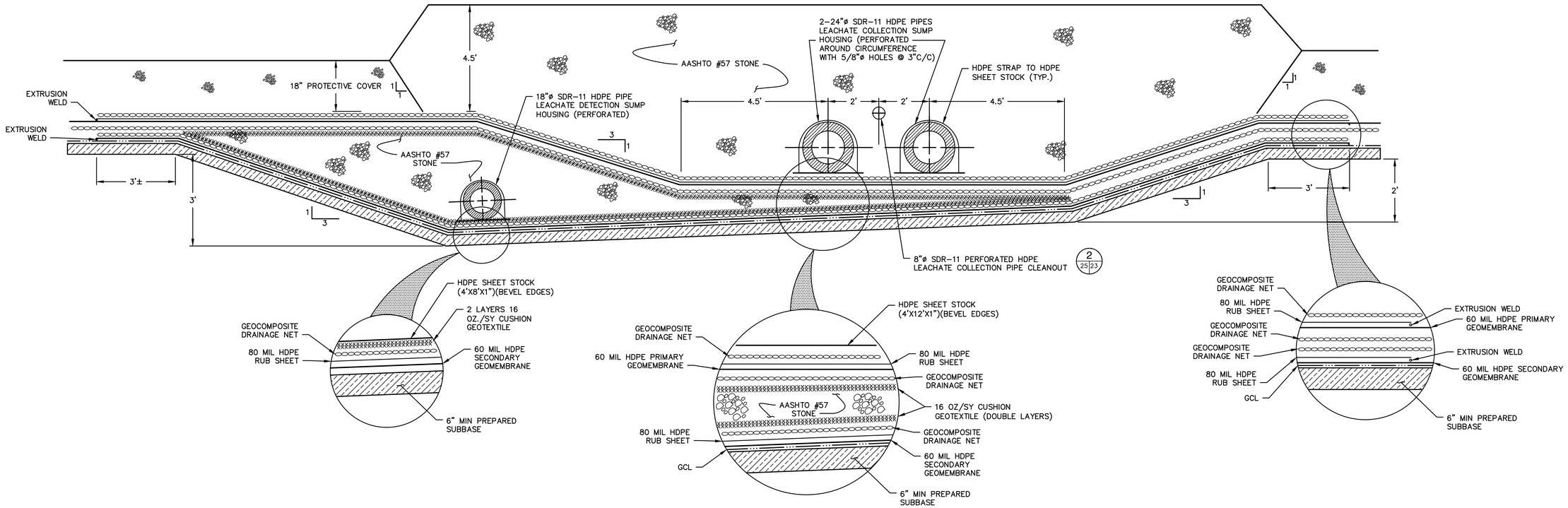

SECTION A-A (LEACHATE COLLECTION SYSTEM SUMP SECTION) A 24 25

NOT TO SCALE

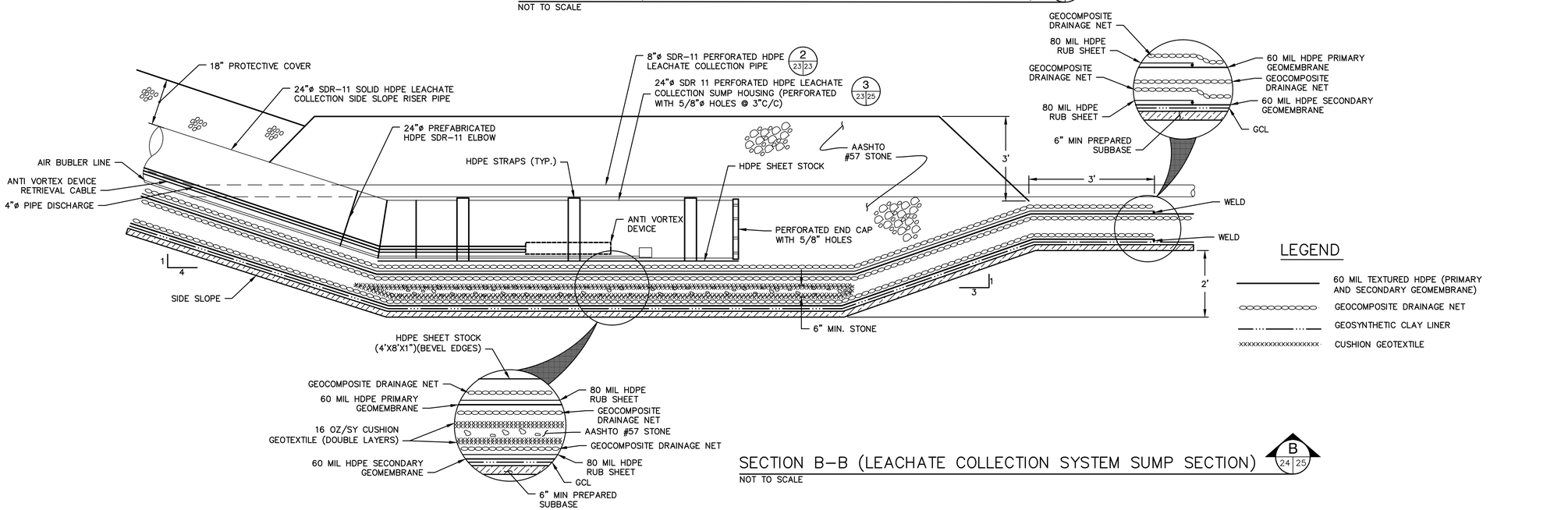

SECTION B-B (LEACHATE COLLECTION SYSTEM SUMP SECTION) B 24 25

NOT TO SCALE

LEGEND

- 60 MIL TEXTURED HDPE (PRIMARY AND SECONDARY GEOMEMBRANE)
- GEOCOMPOSITE DRAINAGE NET
- GEOSYNTHETIC CLAY LINER
- CUSHION GEOTEXTILE

COMMONWEALTH OF PENNSYLVANIA REGISTERED PROFESSIONAL ENGINEER DENISE WESSELS

NO.	REVISION	DATE

SHEET TITLE: LEACHATE SUMP SECTIONS I

PROJECT TITLE: HEILMANDALE EXPANSION PHASE II PERMIT MODIFICATION

CLIENT: GREATER LEBANON REFUSE AUTHORITY, 1610 RUSSELL ROAD, LEBANON, PENNSYLVANIA 17046

SCS ENGINEERS
STEARNS, CONRAD AND SCHMIDT CONSULTING ENGINEERS, INC.
22 DENVER ROAD, SUITE E - DENVER, PA 17517
PH. (610) 382-3050 SCSENGINEERS.COM

PROJ. NO. 02215800.05 | DSN. BY: ERS | DWN. BY: SRS | CHK. BY: DW | Q/A RVW BY: DW | APP. BY: DW

CADD FILE: SHT-25

DATE: JULY 2018

SCALE: AS SHOWN

DRAWING NO. 25 of 36

M:\02215800.05 GLRA\DESIGN\SHT-23-26 LEACHATE COLLECTION SYSTEM DETAILS.DWG layout: LEACHATE SUMP SECTIONS I plotted on: 7/18/2018 2:43 PM Sullivan, Sean

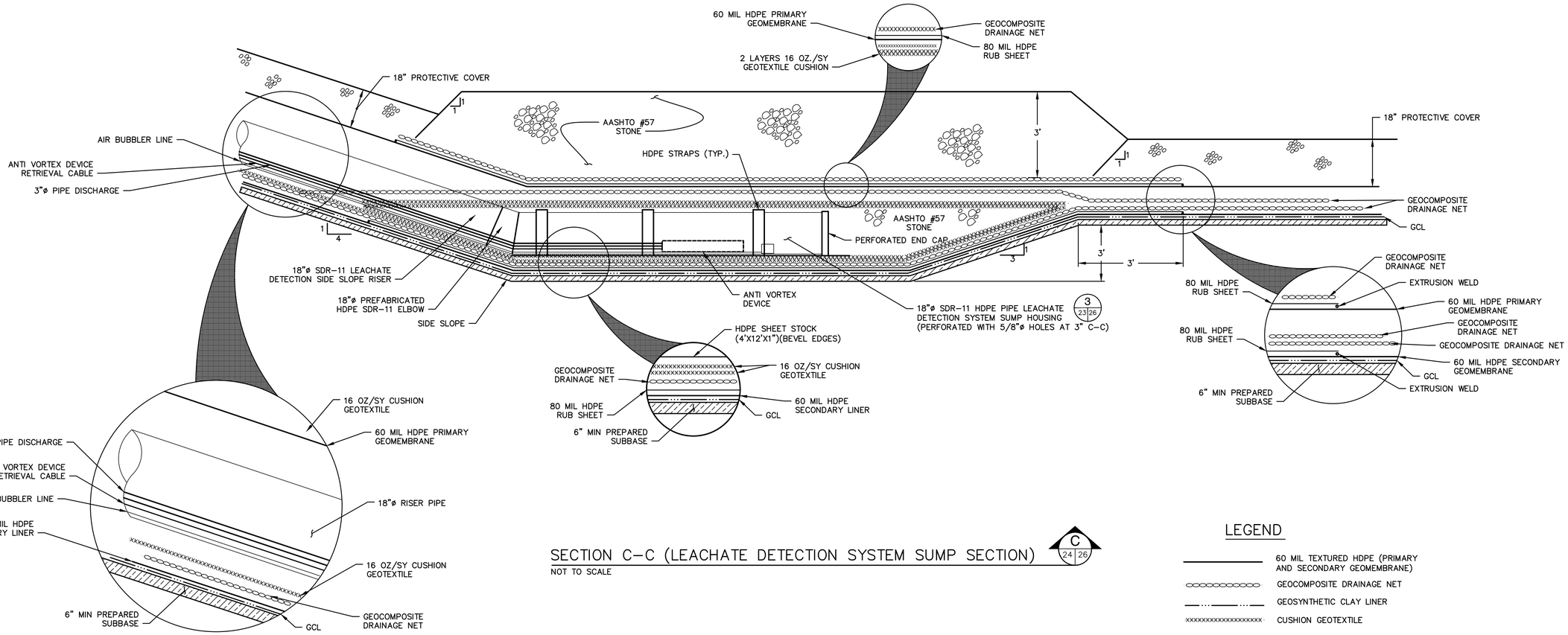

SECTION C–C (LEACHATE DETECTION SYSTEM SUMP SECTION) C 24 26

NOT TO SCALE

LEGEND

- 60 MIL TEXTURED HDPE (PRIMARY AND SECONDARY GEOMEMBRANE)
- GEOCOMPOSITE DRAINAGE NET
- GEOSYNTHETIC CLAY LINER
- CUSHION GEOTEXTILE

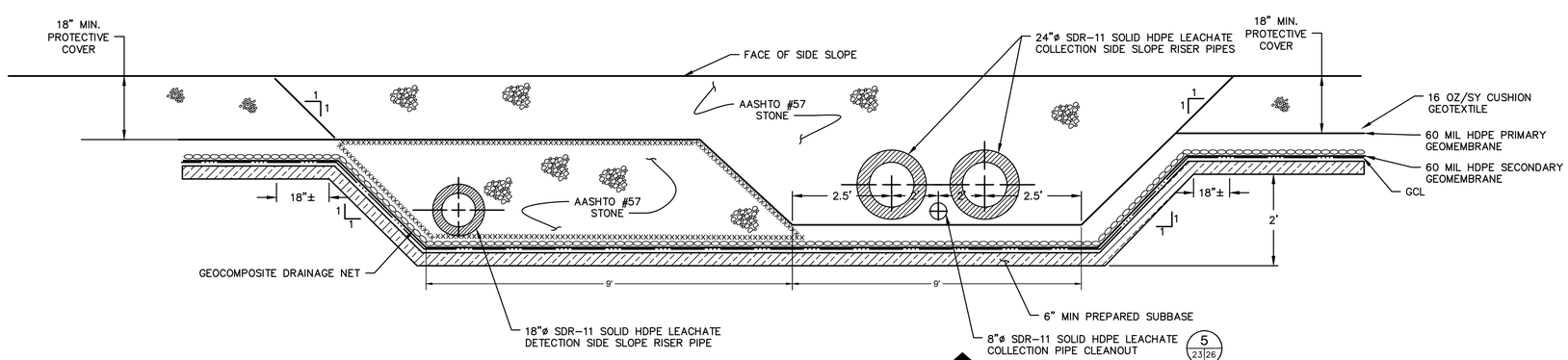

SECTION D–D (SIDE SLOPE RISERS) D 24 26

NOT TO SCALE

COMMONWEALTH OF PENNSYLVANIA REGISTERED PROFESSIONAL DENISE WESSELS ENGINEER

NO.	REVISION	DATE

SHEET TITLE: LEACHATE SUMP SECTIONS II

PROJECT TITLE: HEILMANDALE EXPANSION PHASE II PERMIT MODIFICATION

CLIENT: GREATER LEBANON REFUSE AUTHORITY, 1610 RUSSELL ROAD, LEBANON, PENNSYLVANIA 17046

SCS ENGINEERS
STEARNS, CONRAD AND SCHMIDT CONSULTING ENGINEERS, INC.
22 DENVER ROAD; SUITE E - DENVER, PA 17517
PH. (610) 382-3050 SCSENGINEERS.COM

PROJ. NO. 02215800.05 | DWN. BY: SRS | Q/A RVW BY: DW
DSN. BY: ERS | CHK. BY: DW | APP. BY: DW

CADD FILE: SHT-26

DATE: JULY 2018

SCALE: AS SHOWN

DRAWING NO. 26 of 36

M:\02215800.05 QLPA\DESIGN\SHT-23-26 LEACHATE COLLECTION SYSTEM DETAILS.DWG layout: LEACHATE SUMP SECTIONS II plotted on: 7/18/2018 2:43 PM Sullivan, Sean

LEGEND

- EXISTING INDEX CONTOUR
- EXISTING INTERMEDIATE CONTOUR
- EXISTING LIMIT OF WASTE
- EXISTING LIMIT OF CAPPED AREA
- EXISTING POND/STREAM
- EXISTING PROPERTY LINE
- PERMIT BOUNDARY
- EXISTING TOWNSHIP LINE
- EXISTING STORM DRAIN
- EXISTING GROUNDWATER INTERCEPTOR
- FM — EXISTING FORCEMAIN
- LFG — EXISTING LFG TRANSMISSION/VENTING PIPE
- GW-001 — EXISTING PERIMETER MONITORING PROBE
- M-3 — EXISTING GROUNDWATER MONITORING WELL
- 500 — PROPOSED INDEX CONTOUR
- PROPOSED INTERMEDIATE CONTOUR
- PROPOSED PERIMETER/HAUL ROAD
- PROPOSED LIMIT OF NEW WASTE
- PROPOSED PAD LIMIT
- NEW CAPPED LIMIT
- L — PROPOSED LEACHATE COLLECTION LINE
- LFG — PROPOSED LFG HEADER
- FM — PROPOSED FORCEMAIN

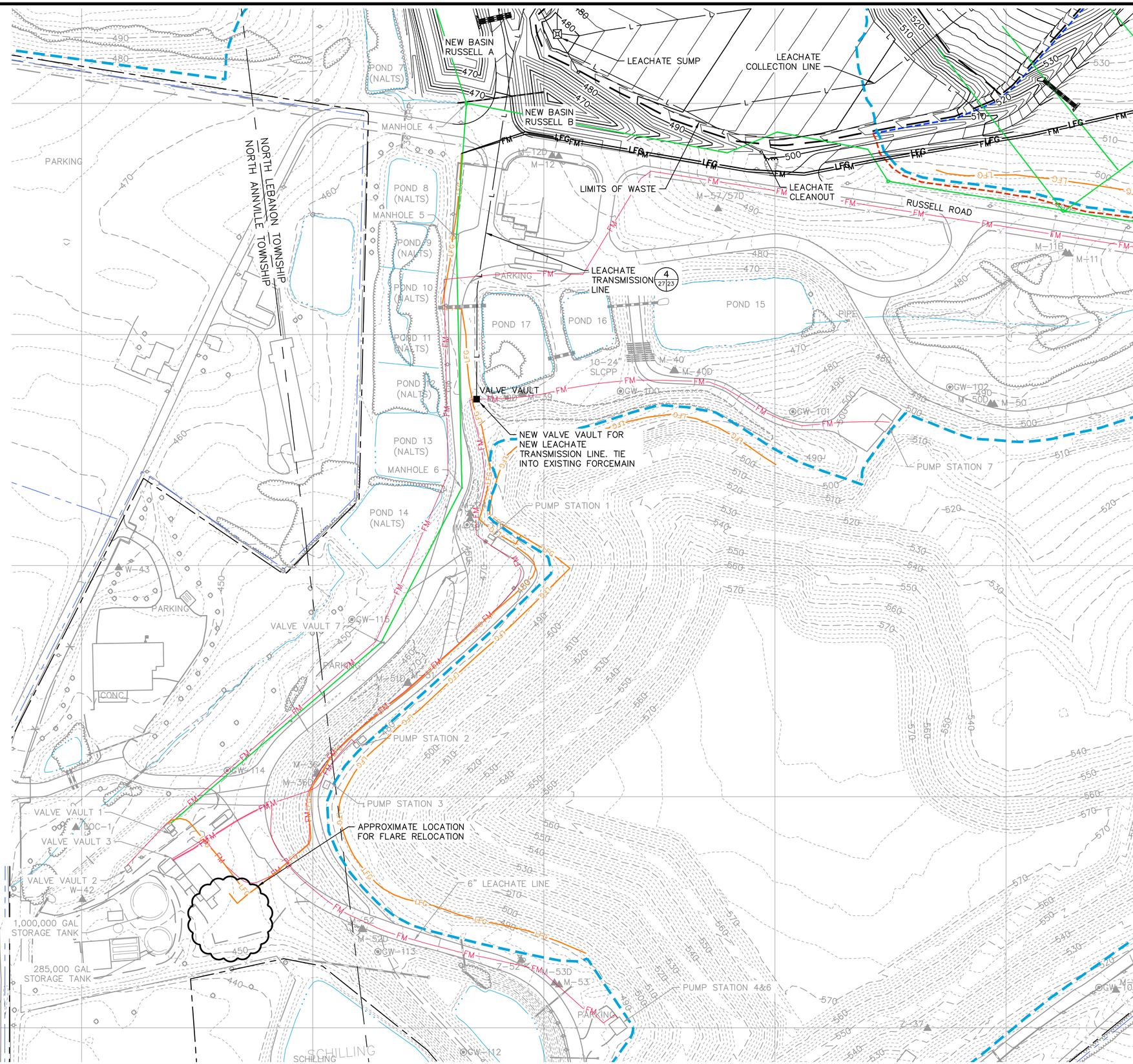

COMMONWEALTH OF PENNSYLVANIA REGISTERED PROFESSIONAL ENGINEER DENISE WESSELS

NO.	REVISION	DATE

SHEET TITLE: LEACHATE AND LANDFILL GAS TRANSMISSION PLAN

PROJECT TITLE: HEILMANDALE EXPANSION PHASE II PERMIT MODIFICATION

CLIENT: GREATER LEBANON REFUSE AUTHORITY
1610 RUSSELL ROAD
LEBANON, PENNSYLVANIA 17046

SCS ENGINEERS
STEARNS, CONRAD AND SCHMIDT CONSULTING ENGINEERS, INC.
22 DENVER ROAD; SUITE E- DENVER, PA 17517
PH. (610) 382-3050 SCSENGINEERS.COM

PROJ. NO. 02215800.05 | DWN. BY: SRS | Q/A RVW BY: DW
DSN. BY: ERS | CHK. BY: DW | APP. BY: DW

CADD FILE: SHT-27

DATE: JULY 2018

SCALE: 1"=100'

DRAWING NO. 27 of 36

M:\02215800.05 GLRA\DESIGN\SHT-27 LEACHATE TRANSMISSION LINE.DWG layout: SHT-06 plotted on: 7/18/2018 2:43 PM Sullivan, Sean

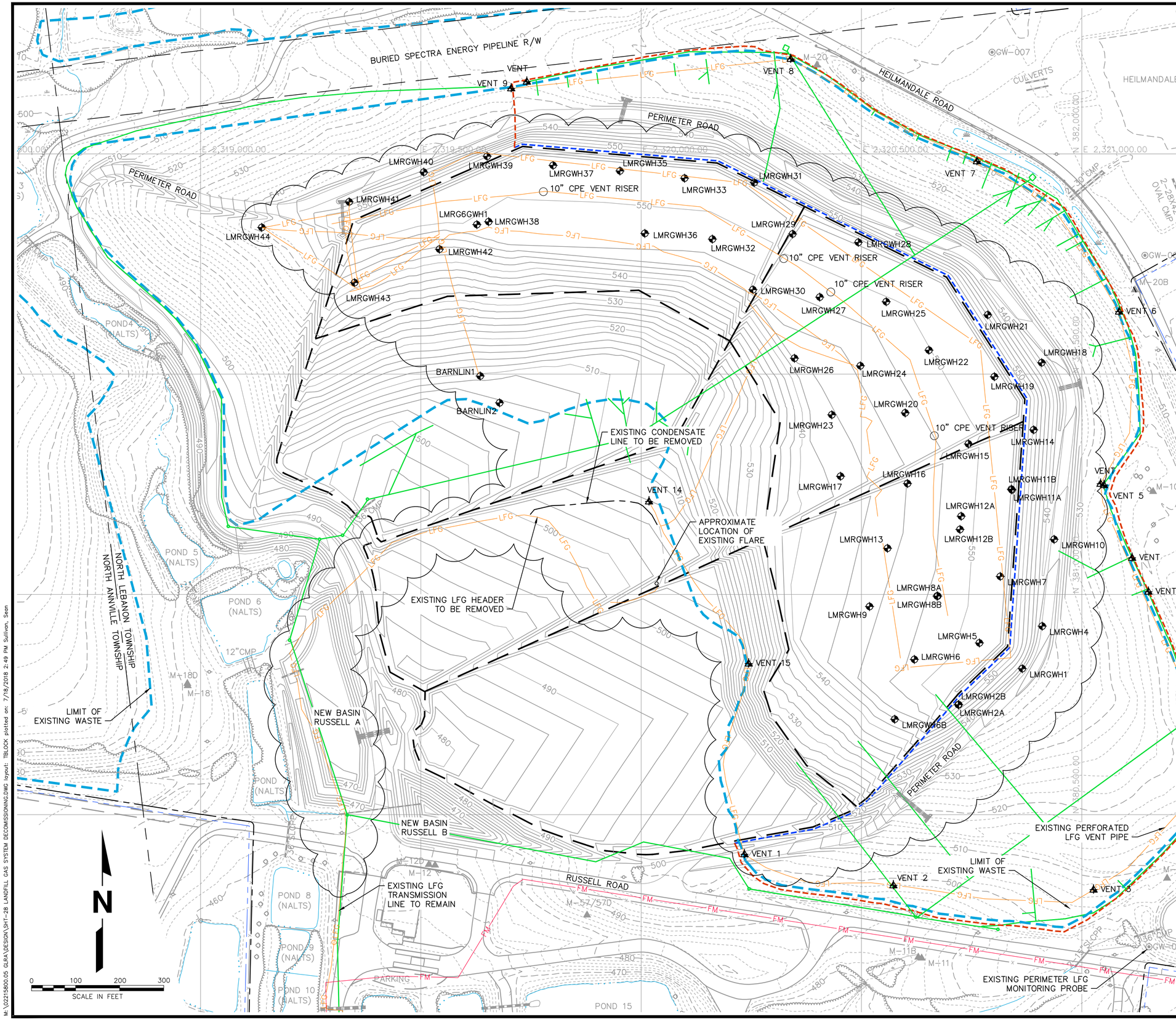

LEGEND

- EXISTING INDEX CONTOUR
- EXISTING INTERMEDIATE CONTOUR
- EXISTING LIMIT OF WASTE
- EXISTING LIMIT OF CAPPED AREA
- EXISTING POND/STREAM
- EXISTING PROPERTY LINE
- PERMIT BOUNDARY
- EXISTING EASEMENT
- EXISTING TOWNSHIP LINE
- EXISTING STORM DRAIN
- EXISTING INTERCEPTOR /UNDERDRAIN/GRAVITY MAIN
- FM — EXISTING FORCEMAIN
- LFG — EXISTING LFG TRANSMISSION/VENTING PIPE
- GW-001 — EXISTING PERIMETER MONITORING PROBE
- VENT 7 — EXISTING PASSIVE VENT
- LMRGWH7 — EXISTING EXTRACTION WELL
- 10" CPE VENT RISER — EXISTING VENT RISER
- PROPOSED INDEX CONTOUR
- PROPOSED INTERMEDIATE CONTOUR
- PROPOSED PERIMETER/HAUL ROAD
- PROPOSED PAD LIMIT
- NEW CAPPED LIMIT
- LIMIT OF DECOMMISSION

COMMONWEALTH OF PENNSYLVANIA
REGISTERED PROFESSIONAL ENGINEER
DENISE WESSELS

NO.	REVISION	DATE

SHEET TITLE: LANDFILL GAS DECOMMISSIONING PLAN

PROJECT TITLE: HEILMANDALE EXPANSION PHASE II PERMIT MODIFICATION

CLIENT: GREATER LEBANON REFUSE AUTHORITY
1610 RUSSELL ROAD
LEBANON, PENNSYLVANIA 17046

SCS ENGINEERS
STEARNS, CONRAD AND SCHMIDT CONSULTING ENGINEERS, INC.
22 DENVER ROAD; SUITE E- DENVER, PA 17517
PH. (610) 382-3050 SCSENGINEERS.COM

PROJ. NO. 02215800.05 | DWN. BY: SRS | Q/A RVW BY: DW | APP. BY: DW | DSN. BY: APM | CHK. BY: APM

CADD FILE: SHT-28

DATE: JULY 2018

SCALE: 1"=100'

DRAWING NO. 28 of 36

M:\02215800.05 GLFA\DESIGN\SHT-28 LANDFILL GAS SYSTEM DECOMMISSIONING.DWG layout: TBLOCK plotted on: 7/18/2018 2:49 PM Sullivan, Sean

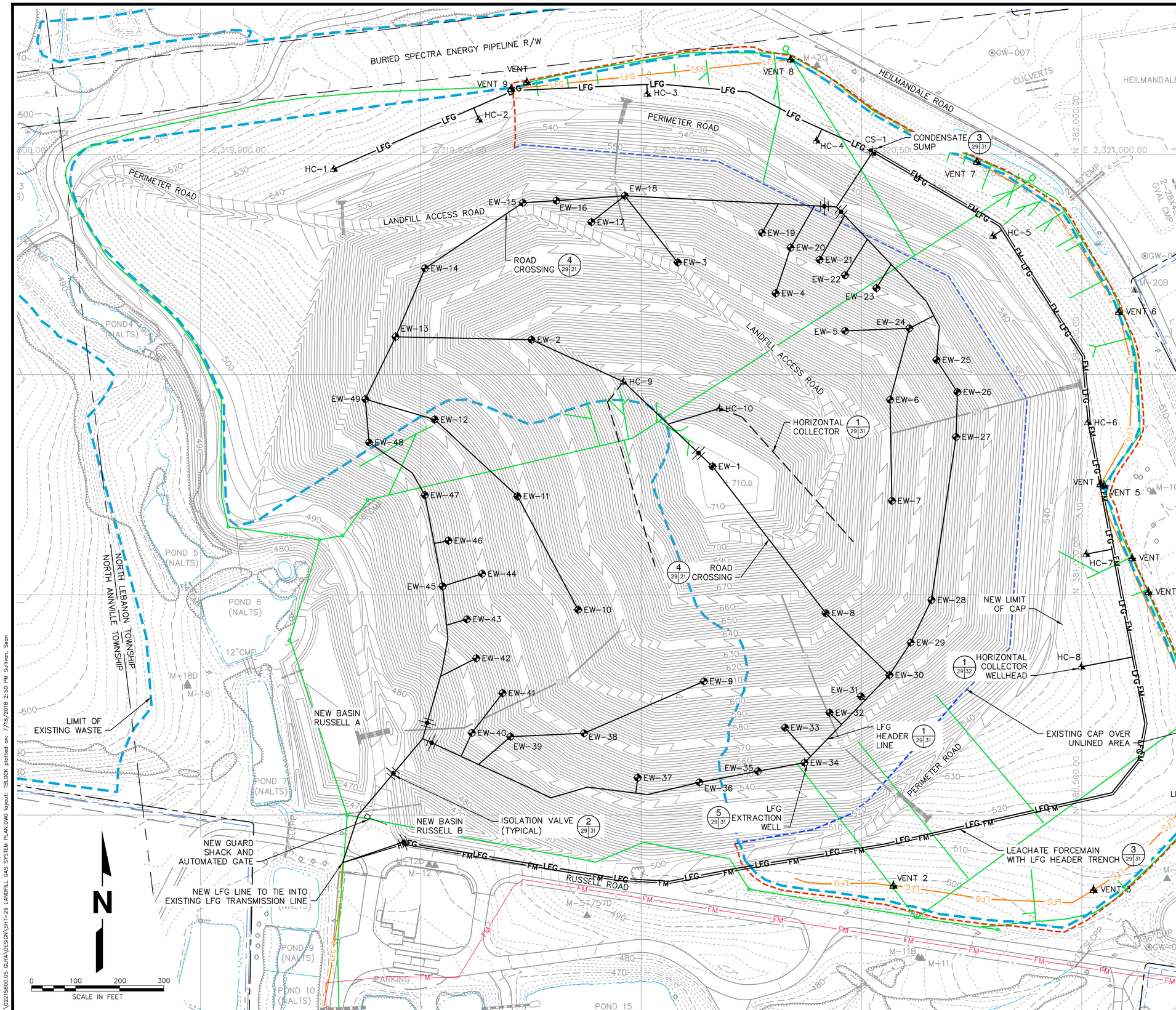

LEGEND

- EXISTING INDEX CONTOUR
- EXISTING INTERMEDIATE CONTOUR
- EXISTING LIMIT OF WASTE
- EXISTING LIMIT OF CAPPED AREA
- EXISTING PROPERTY LINE
- PERMIT BOUNDARY
- EXISTING EASEMENT
- EXISTING TOWNSHIP LINE
- EXISTING POND/STREAM
- EXISTING STORM DRAIN
- EXISTING INTERCEPTOR /UNDERDRAIN/GRAVITY MAIN
- FM — EXISTING FORCEMAIN
- LFG — EXISTING LFG TRANSMISSION/VENTING PIPE
- GW-001 — EXISTING PERIMETER MONITORING PROBE
- VENT 7 — EXISTING PASSIVE VENT
- EW-21 — PROPOSED EXTRACTION WELL
- CS-1 — PROPOSED CONDENSATE SUMP
- HC-6 — PROPOSED HORIZONTAL COLLECTOR WELLHEAD
- PROPOSED BUTTERFLY VALVE
- 500 — PROPOSED INDEX CONTOUR
- PROPOSED INTERMEDIATE CONTOUR
- PROPOSED PERIMETER/HAUL ROAD
- NEW CAPPED LIMIT
- PROPOSED LFG HEADER/LATERAL
- PROPOSED HORIZONTAL COLLECTOR
- LFG — PROPOSED PERIMETER LFG HEADER
- FM — PROPOSED FORCEMAIN

NOTES:

1. SEE SHEET 30 FOR LAYOUT OF HORIZONTAL COLLECTORS IN OLD WASTE
2. LFG EXTRACTION WELLS WILL BE LOCATED BASED ON FIELD CONDITIONS.

COMMONWEALTH OF PENNSYLVANIA
REGISTERED PROFESSIONAL ENGINEER
DENISE WESSELS

NO.	REVISION	DATE

SHEET TITLE: **LANDFILL GAS SYSTEM PLAN**

PROJECT TITLE: **HEILMANDALE EXPANSION PHASE II PERMIT MODIFICATION**

CLIENT: **GREATER LEBANON REFUSE AUTHORITY**
1610 RUSSELL ROAD
LEBANON, PENNSYLVANIA 17046

SCS ENGINEERS
STEARNS, CONRAD AND SCHMIDT CONSULTING ENGINEERS, INC.
22 DENVER ROAD; SUITE E - DENVER, PA 17517
PH. (610) 382-3050 SCSENGINEERS.COM

PROJ. NO. 02215800.05 | DWN. BY: SRS | Q/A RVW BY: DW
DSK. BY: APM | CHK. BY: APM | APP. BY: DW

CADD FILE: SHT-29
DATE: JULY 2018
SCALE: 1"=100'
DRAWING NO. **29** of **36**

M:\02215800.05 GLRA\DESIGN\SHT-29 LANDFILL GAS SYSTEM PLAN.DWG layout: TBLOCK plotted on: 7/18/2018 2:50 PM Sullivan, Sean

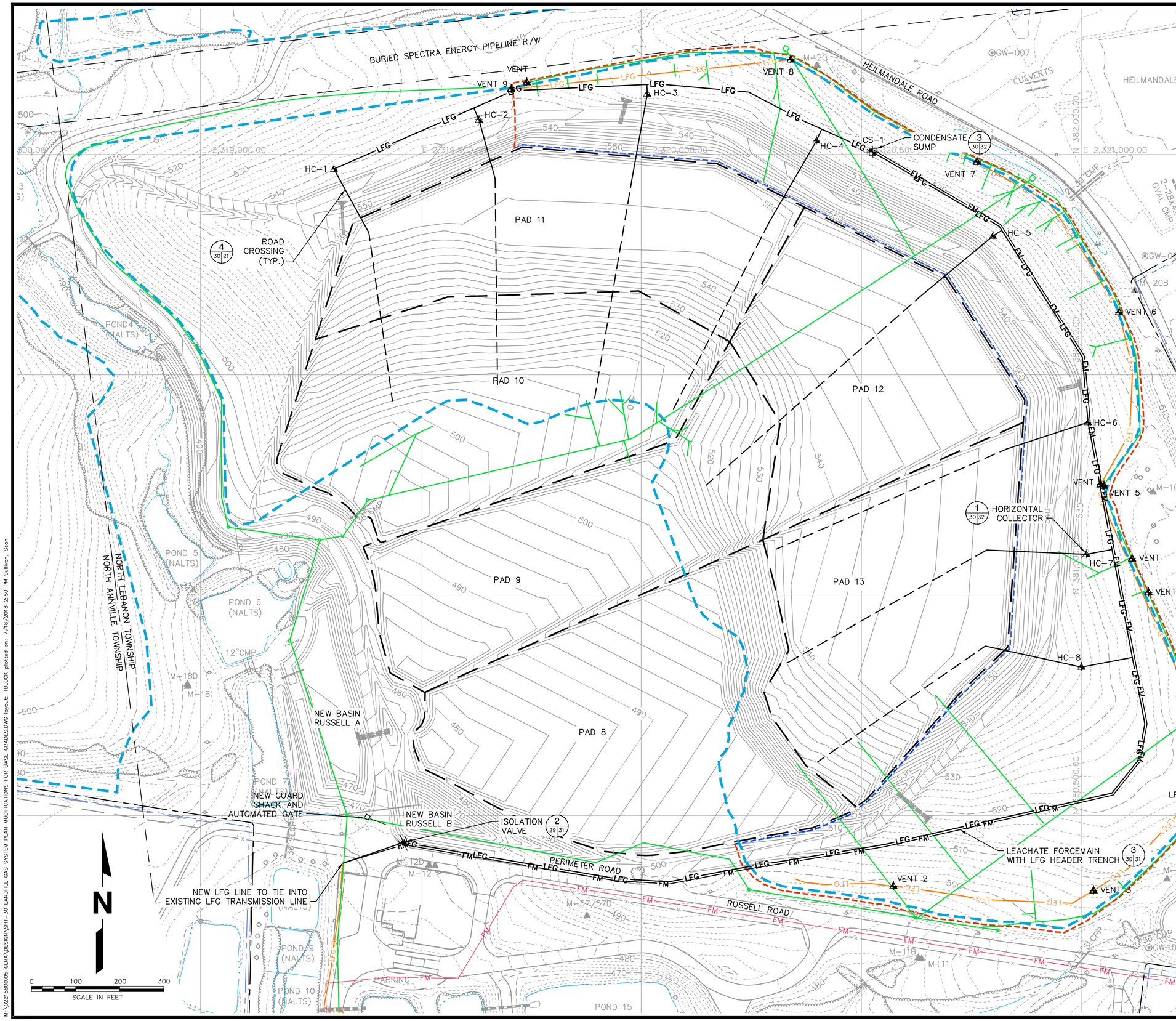

LEGEND

- EXISTING INDEX CONTOUR
- EXISTING INTERMEDIATE CONTOUR
- EXISTING LIMIT OF WASTE
- EXISTING LIMIT OF CAPPED AREA
- EXISTING PROPERTY LINE
- PERMIT BOUNDARY
- EXISTING EASEMENT
- EXISTING TOWNSHIP LINE
- EXISTING POND/STREAM
- EXISTING STORM DRAIN
- EXISTING INTERCEPTOR /UNDERDRAIN/GRAVITY MAIN
- FM — EXISTING FORCEMAIN
- LFG — EXISTING LFG TRANSMISSION/VENTING PIPE
- GW-001 — EXISTING PERIMETER MONITORING PROBE
- VENT 7 — EXISTING PASSIVE VENT
- CS-1 — PROPOSED CONDENSATE SUMP
- HC-6 — PROPOSED HORIZONTAL COLLECTOR WELLHEAD
- PROPOSED BUTTERFLY VALVE
- 500 — PROPOSED INDEX CONTOUR
- PROPOSED INTERMEDIATE CONTOUR
- PROPOSED PERIMETER/HAUL ROAD
- NEW CAPPED LIMIT
- PROPOSED LFG HEADER/LATERAL
- PROPOSED HORIZONTAL COLLECTOR
- LFG — PROPOSED PERIMETER LFG HEADER
- FM — PROPOSED FORCEMAIN

COMMONWEALTH OF PENNSYLVANIA
REGISTERED PROFESSIONAL ENGINEER
DENISE WESSELS

NO.	REVISION	DATE

SHEET TITLE: LANDFILL GAS SYSTEM PLAN FOR OLD WASTE

PROJECT TITLE: **HEILMANDALE EXPANSION PHASE II PERMIT MODIFICATION**

CLIENT: **GREATER LEBANON REFUSE AUTHORITY**
1610 RUSSELL ROAD
LEBANON, PENNSYLVANIA 17046

SCS ENGINEERS
STEARNS, CONRAD AND SCHMIDT CONSULTING ENGINEERS, INC.
22 DENVER ROAD; SUITE E - DENVER, PA 17517
PH. (610) 382-3050 SCSENGINEERS.COM

PROJ. NO. 02215800.05 | DWN. BY: SRS | Q/A RVW BY: DW
DSK. BY: APM | CHK. BY: APM | APP. BY: DW

CADD FILE: SHT-30
DATE: JULY 2018
SCALE: 1"=100'
DRAWING NO. **30** of **36**

M:\02215800.05 GLRA\DESIGN\SHT-30 LANDFILL GAS SYSTEM PLAN MODIFICATIONS FOR BASE GRADES.DWG layout: TBLOCK plotted on: 7/18/2018 2:50 PM Sullivan, Sean

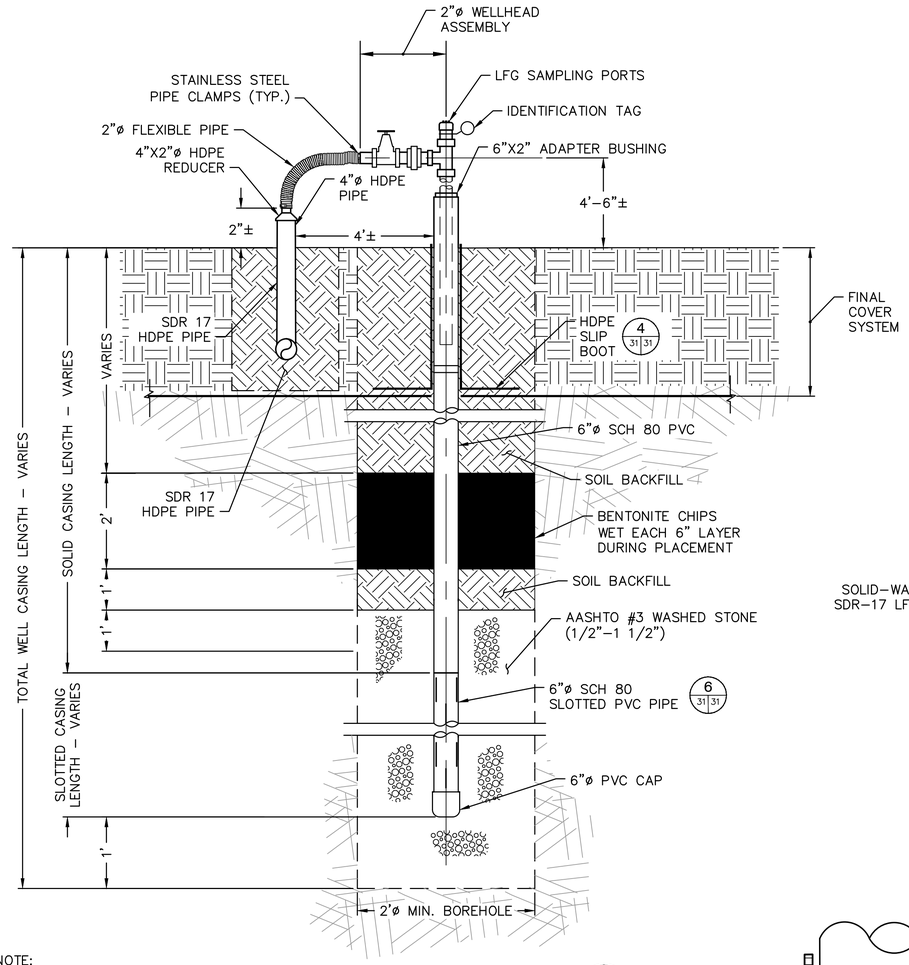

NOTE:

1. USE MOLDED TEE AND REDUCER FOR CONNECTION TO 6"ø AND SMALLER HEADER. USE BRANCH SADDLE CONNECTION TO 8"ø AND LARGER HEADER
2. THE WELL SHALL BE DESIGNED W/ A MINIMUM DISTANCE 15 FEET BETWEEN THE BOTTOM OF THE BORE HOLE AND THE TOP OF THE 18" CUSHION LAYER.

EXTRACTION WELL DETAIL (5)
NO SCALE — 10,11,12,13,14,29 / 31

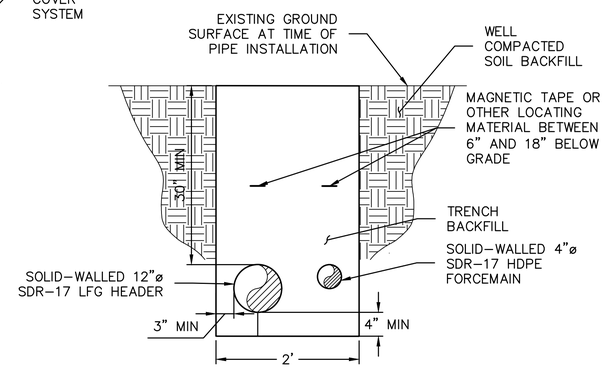

LEACHATE FORCEMAIN WITH LFG HEADER TRENCH DETAIL (3)
SCALE: 1" = 1' — 10,29 / 31

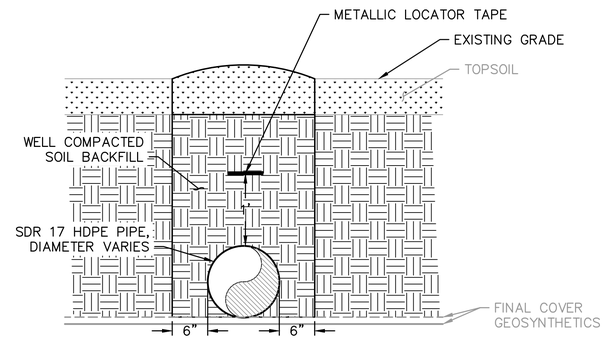

PIPE TRENCH IN CAPPED AREA DETAIL (1)
NO SCALE — 10,11,12,13,14 / 31

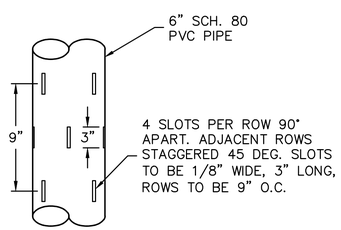

SLOTTED PIPE DETAIL (6)
NO SCALE — 31 / 31

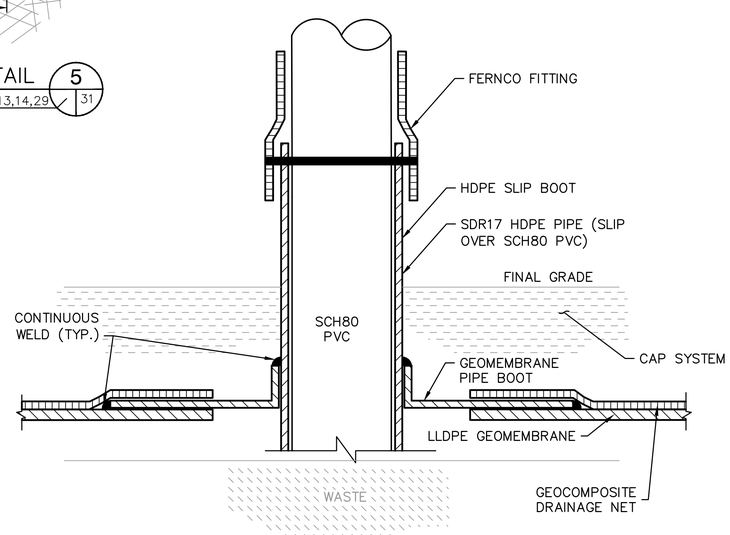

TYPICAL HDPE SLIP BOOT DETAIL (4)
NOT TO SCALE — 31 / 31

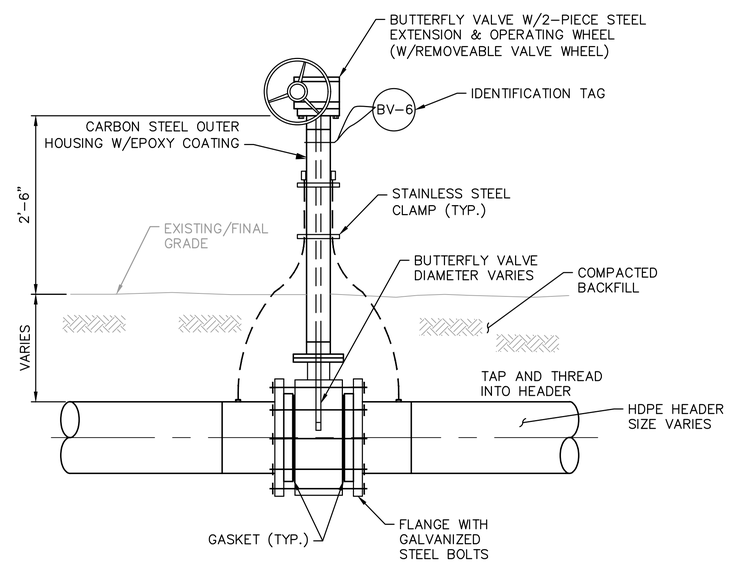

HEADER ISOLATION VALVE DETAIL (2)
NO SCALE — 29,30 / 31

COMMONWEALTH OF PENNSYLVANIA — REGISTERED PROFESSIONAL ENGINEER — DENISE WESSELS

NO.	REVISION	DATE

SHEET TITLE: **LANDFILL GAS DETAILS I**

PROJECT TITLE: **HEILMANDALE EXPANSION PHASE II PERMIT MODIFICATION**

CLIENT: **GREATER LEBANON REFUSE AUTHORITY**
1610 RUSSELL ROAD
LEBANON, PENNSYLVANIA 17046

SCS ENGINEERS
STEARNS, CONRAD AND SCHMIDT CONSULTING ENGINEERS, INC.
22 DENVER ROAD; SUITE E - DENVER, PA 17517
PH. (610) 382-5050 SCSENGINEERS.COM

PROJ. NO. 02215800.05 | DSN. BY: ERS | DWN. BY: SRS | CHK. BY: DW | Q/A RVW. BY: DW | APP. BY: DW

CADD FILE: SHT-31

DATE: JULY 2018

SCALE:

DRAWING NO. **31** of **36**

M:\02215800.05 GLRA\DESIGN\SHT-31-32 LANDFILL GAS SYSTEM DETAILS.DWG layout: DETAILS I plotted on: 7/18/2018 2:50 PM Sullivan, Sean

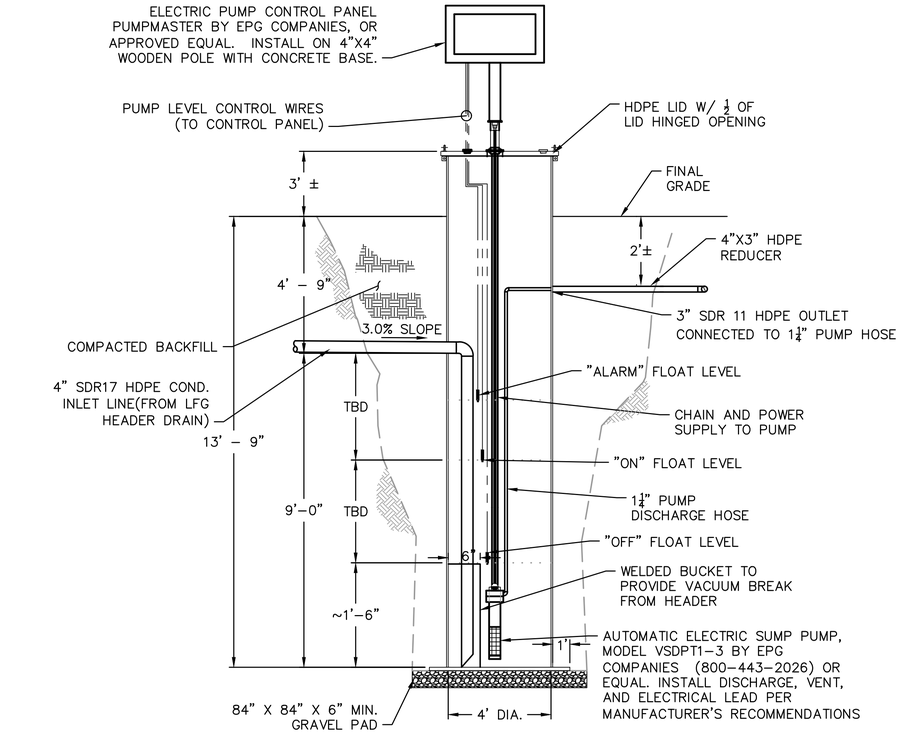

AUTOMATIC SUMP DETAIL 3 (10,29,30 / 32)
NO SCALE

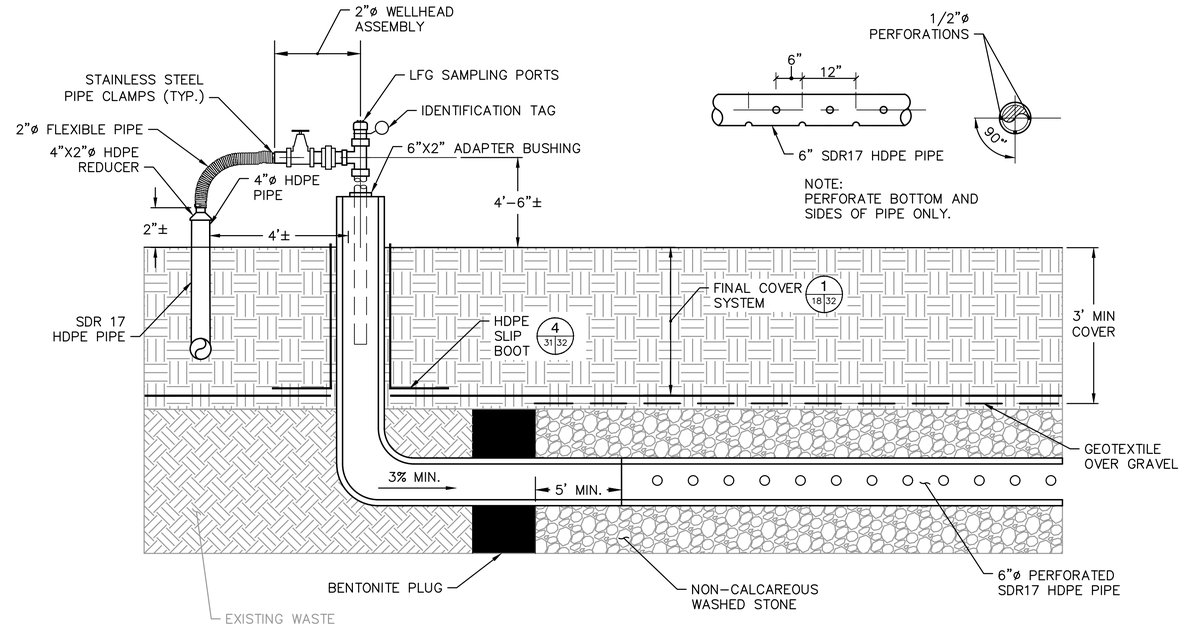

HORIZONTAL COLLECTOR DETAIL 1 (10,11,13,14,29,30 / 32)
NO SCALE

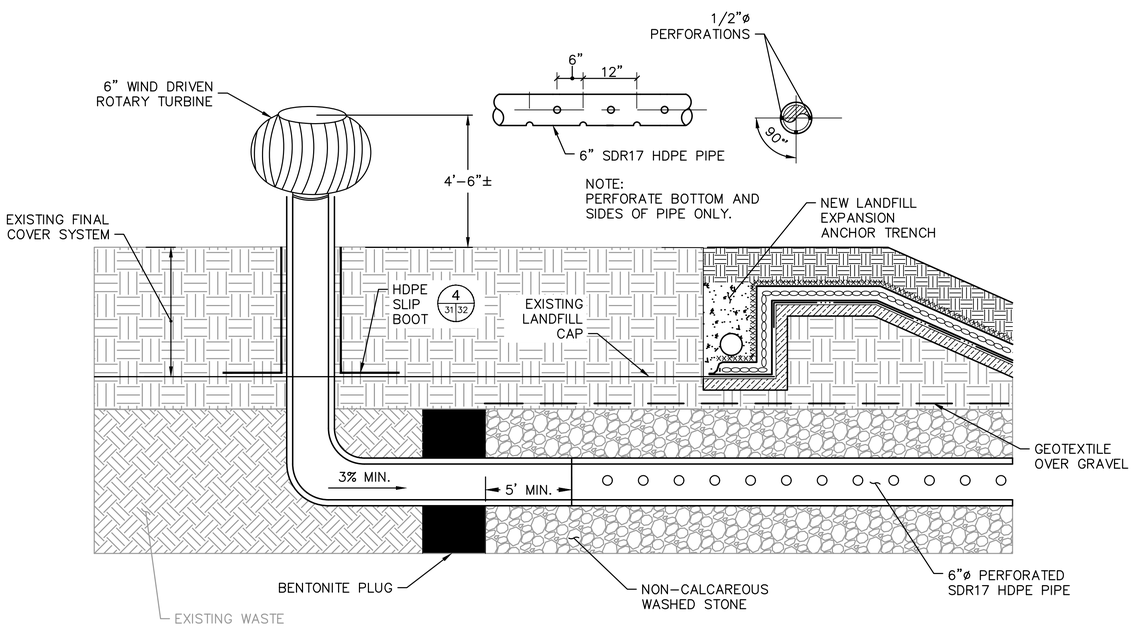

PARTIAL HORIZONTAL COLLECTOR DETAIL 4 (10,11 / 32)
NO SCALE

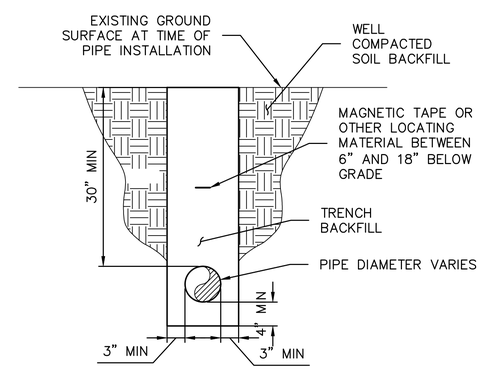

TYPICAL PIPE TRENCH DETAIL 2 (9,11 / 32)
NO SCALE

COMMONWEALTH OF PENNSYLVANIA REGISTERED PROFESSIONAL ENGINEER DENISE WESSELS

NO.	REVISION	DATE

SHEET TITLE: LANDFILL GAS DETAILS II

PROJECT TITLE: HEILMANDALE EXPANSION PHASE II PERMIT MODIFICATION

CLIENT: GREATER LEBANON REFUSE AUTHORITY, 1610 RUSSELL ROAD, LEBANON, PENNSYLVANIA 17046

SCS ENGINEERS
STEARNS, CONRAD AND SCHMIDT CONSULTING ENGINEERS, INC.
22 DENVER ROAD; SUITE E - DENVER, PA 17517
PH. (610) 382-3050 SCSENGINEERS.COM

PROJ. NO. 02215800.05 | DWN. BY: SRS | Q/A RVW BY: DW
DSN. BY: ERS | CHK. BY: DW | APP. BY: DW

CADD FILE: SHT–32
DATE: JULY 2018
SCALE:
DRAWING NO. 32 of 36

M:\02215800.05 QLRA\DESIGN\SHT-31-32 LANDFILL GAS SYSTEM DETAILS.DWG layout: DETAILS II plotted on: 7/18/2018 2:51 PM Sullivan, Sean

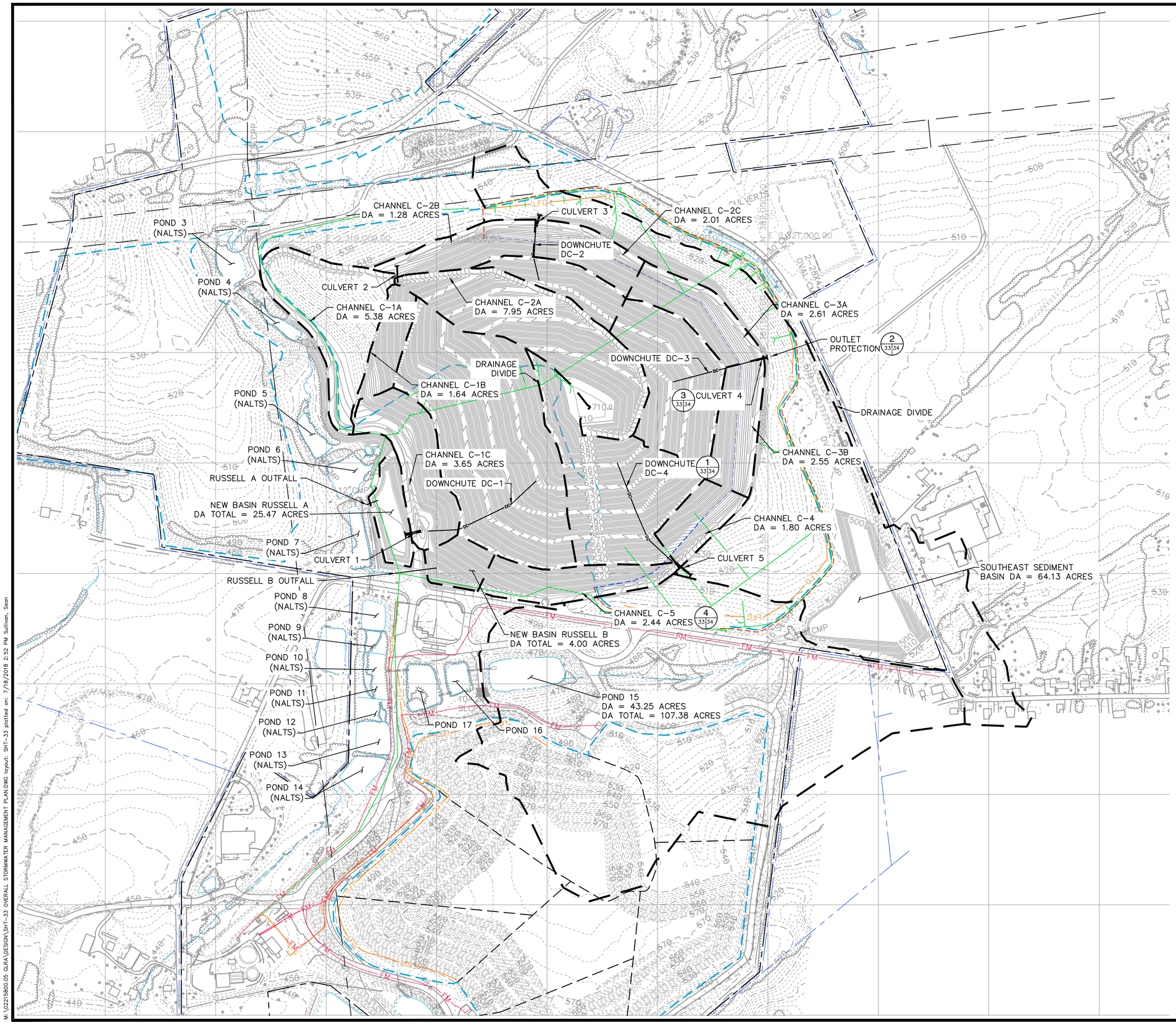

LEGEND

- EXISTING INDEX CONTOUR
- EXISTING INTERMEDIATE CONTOUR
- EXISTING LIMIT OF WASTE
- EXISTING LIMIT OF CAPPED AREA
- EXISTING PROPERTY LINE
- PERMIT BOUNDARY
- EXISTING EASEMENT
- EXISTING TOWNSHIP LINE
- EXISTING POND/STREAM
- EXISTING STORM DRAIN
- EXISTING INTERCEPTOR /UNDERDRAIN/GRAVITY MAIN
- EXISTING FORCEMAIN
- EXISTING LFG TRANSMISSION/VENTING PIPE
- DRAINAGE DIVIDE
- PROPOSED DOWNCHUTE
- PROPOSED INDEX CONTOUR
- PROPOSED INTERMEDIATE CONTOUR
- PROPOSED PERIMETER/HAUL ROAD
- NEW CAPPED LIMIT

COMMONWEALTH OF PENNSYLVANIA
REGISTERED PROFESSIONAL ENGINEER
DENISE WESSELS

NO.	REVISION	DATE

SHEET TITLE: OVERALL STORMWATER MANAGEMENT PLAN

PROJECT TITLE: HEILMANDALE EXPANSION PHASE II PERMIT MODIFICATION

CLIENT: GREATER LEBANON REFUSE AUTHORITY
1610 RUSSELL ROAD
LEBANON, PENNSYLVANIA 17046

SCS ENGINEERS
STEARNS, CONRAD AND SCHMIDT
CONSULTING ENGINEERS, INC.
22 DENVER ROAD, SUITE E - DENVER, PA 17517
PH. (610) 382-3050 SCSENGINEERS.COM

PROJ. NO. 02215800.05 | DWN. BY: SRS | Q/A RVW BY: MAG
DSN. BY: ERS | CHK. BY: DW | APP. BY: DW

CADD FILE: SHT-33

DATE: JULY 2018

SCALE: 1"=200'

DRAWING NO. 33 of 36

M:\02215800.05 GLRA\DESIGN\SHT-33 OVERALL STORMWATER MANAGEMENT PLAN.DWG layout: SHT-33 plotted on: 7/18/2018 2:52 PM Sullivan, Sean

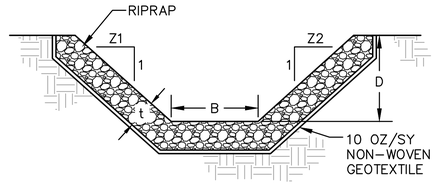

CHANNEL	25-YR FLOW RATE (CFS)	25-YR VELOCITY (FPS)	Z1 (FT)	Z2 (FT)	B (FT)	D (FT)	SLOPE (%)	t (IN)	LINER	CLASS
C-1A	15.60	5.40	3	3	4	2	8.00	9	RIP-RAP	R-3
	15.60	2.76	3	3	4	2	1.00	9	RIP-RAP	R-3
C-1B	5.58	3.95	3	3	4	2	8.96	9	RIP-RAP	R-3
	5.58	3.52	3	3	4	2	6.25	9	RIP-RAP	R-3
C-1C	29.34	3.47	3	3	4	2	1.00	9	RIP-RAP	R-3
	29.34	5.54	3	3	4	2	4.33	9	RIP-RAP	R-3
C-2A	23.85	5.38	3	3	4	2	9.50	18	RIP-RAP	R-4
C-2B	26.21	3.54	3	3	4	2	1.21	9	RIP-RAP	R-3
C-2C	7.04	2.56	3	3	4	2	2.02	9	RIP-RAP	R-3
C-3A	8.09	2.54	3	3	4	2	1.72	9	RIP-RAP	R-3
C-3B	7.65	2.25	3	3	4	2	1.21	9	RIP-RAP	R-3
C-4	6.30	4.12	3	3	4	2	8.83	9	RIP-RAP	R-3
C-5	8.54	2.21	3	3	4	2	1.05	9	RIP-RAP	R-3
	8.54	4.67	3	3	4	2	9.00	9	RIP-RAP	R-3

NOTES:

1. FILTER STONE UNDERLAYMENT SHALL BE USED FOR BED SLOPES ≥ 0.10 FT/FT (10%).
2. CHANNEL DIMENSIONS ARE FOR THE COMPLETED CHANNEL AFTER ROCK PLACEMENT. CHANNEL MUST BE OVER-EXCAVATED A SUFFICIENT AMOUNT TO ALLOW FOR THE VOLUME OF ROCK PLACED WITHIN THE CHANNEL WHILE PROVIDING THE SPECIFIED FINISHED DIMENSIONS.
3. CHANNEL DIMENSIONS SHALL BE CONSTANTLY MAINTAINED. CHANNEL SHALL BE CLEANED WHENEVER TOTAL CHANNEL DEPTH IS REDUCED BY 25% AT ANY LOCATION. SEDIMENT DEPOSITS SHALL BE REMOVED WITHIN 24 HOURS OF DISCOVERY OR AS SOON AS SOIL CONDITIONS PERMIT ACCESS TO CHANNEL WITHOUT FURTHER DAMAGE.
4. DAMAGED LINING SHALL BE REPAIRED OR REPLACED WITHIN 48 HOURS OF DISCOVERY.
5. THE MINIMUM ROCK THICKNESS (t) SHALL BE 1.5 TIMES THE MAX ROCK SIZE.
6. REFER TO TABLE 6.6 AND TABLE 6.7 FROM THE PA DEP EROSION AND SEDIMENT CONTROL MANUAL FOR RIP RAP SPECIFICATIONS.
7. DOWNCHUTES (SDD) TO HAVE A MINIMUM SLOPE OF 1% THROUGH THE TERRACES.

STORMWATER CONVEYANCE CHANNEL DETAIL (4 / 33 | 34)
NOT TO SCALE

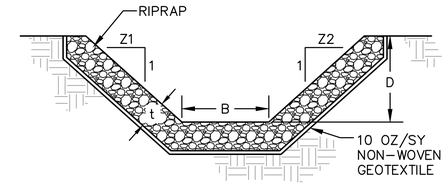

DOWNCHUTE	Z1 (FT)	Z2 (FT)	B (FT)	D (FT)	SLOPE (%)	t (IN)	MAX STONE SIZE (IN)	CLASS	Q25 (CFS)
DC-1	2	2	8	2	33	27	18	R-6	40.70
DC-2	2	2	8	2	33	27	18	R-6	6.34
DC-3	2	2	8	2	33	27	18	R-6	17.91
DC-4	2	2	8	2	33	27	18	R-6	21.26

TYPICAL DOWNCHUTE DETAIL (1 / 7,10,11,12,13,33 | 34)
NOT TO SCALE

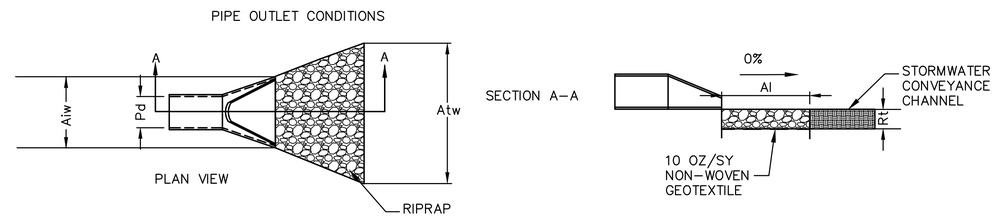

CULVERT	PIPE DIA Pd (IN)	RIPRAP SIZE (R-___)	RIPRAP THICK. Rt (IN)	APRON LENGTH Al (FT)	APRON INITIAL WIDTH Aiw (FT)	APRON TERMINAL WIDTH Atw (FT)	NOTES
CULVERT 1	36" (x 3 BARRELS)	R-4	18	14	24	31	DISCHARGE TO RUSSELL A
CULVERT 2	24" (x 2 BARRELS)	R-4	18	10	12	18	DISCHARGE TO CHANNEL C-2A
CULVERT 3	24" (x 3 BARRELS)	R-4	18	10	18	25	DISCHARGE TO POND 3
CULVERT 4	24" (x 3 BARRELS)	R-4	18	10	18	23	DISCHARGE TO SE BASIN
CULVERT 5	24" (x 3 BARRELS)	R-4	18	8	18	23	DISCHARGE TO SE BASIN

NOTES:

ALL APRONS SHALL BE CONSTRUCTED TO THE DIMENSIONS SHOWN. TERMINAL WIDTHS SHALL BE ADJUSTED AS NECESSARY TO MATCH RECEIVING CHANNELS.

ALL APRONS SHALL BE INSPECTED AT LEAST WEEKLY AFTER EACH RUNOFF EVENT, DISPLACED RIPRAP WITHIN THE APRON SHALL BE REPLACED IMMEDIATELY.

EXTEND RIPRAP ON BACK SIDE OF APRON TO AT LEAST HALF THE DEPTH OF THE PIPE ON BOTH SIDES TO PREVENT SCOUR AROUND THE PIPE.

OUTLET PROTECTION DETAIL (2 / 12,13,33 | 34)
NOT TO SCALE

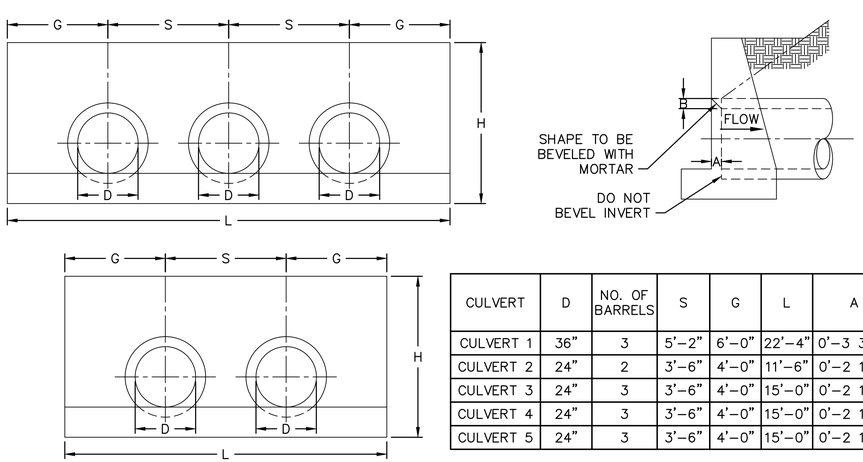

CULVERT	D	NO. OF BARRELS	S	G	L	A	B	H
CULVERT 1	36"	3	5'-2"	6'-0"	22'-4"	0'-3 3/4"	0'-3"	4'-9"
CULVERT 2	24"	2	3'-6"	4'-0"	11'-6"	0'-2 1/2"	0'-2"	3'-9"
CULVERT 3	24"	3	3'-6"	4'-0"	15'-0"	0'-2 1/2"	0'-2"	3'-9"
CULVERT 4	24"	3	3'-6"	4'-0"	15'-0"	0'-2 1/2"	0'-2"	3'-9"
CULVERT 5	24"	3	3'-6"	4'-0"	15'-0"	0'-2 1/2"	0'-2"	3'-9"

FLARED END SECTION (5 / 34 | 34)
NOT TO SCALE

CULVERT	MATERIAL	DO (IN)	NO. OF BARRELS	LENGTH (FT)	INVERT IN (FT)	INVERT OUT (FT)	INLET STRUCTURE	OUTLET STRUCTURE	Q25 (CFS)	SLOPE (%)
CULVERT 1	ADS N-12	36	3	72	472.00	470.00	FLARED (5 / 34 | 34)	FLARED (5 / 34 | 34)	69.02	2.78
CULVERT 2	ADS N-12	24	2	72	548.00	546.00	FLARED (5 / 34 | 34)	FLARED (5 / 34 | 34)	22.00	2.78
CULVERT 3	ADS N-12	24	3	51	537.00	534.00	FLARED (5 / 34 | 34)	FLARED (5 / 34 | 34)	41.18	5.88
CULVERT 4	ADS N-12	24	3	46	535.00	534.00	FLARED (5 / 34 | 34)	FLARED (5 / 34 | 34)	32.86	2.17
CULVERT 5	ADS N-12	24	3	89	520.00	518.00	FLARED (5 / 34 | 34)	FLARED (5 / 34 | 34)	29.45	2.25

CULVERT SCHEDULE (3 / 9,12,13,33 | 34)

COMMONWEALTH OF PENNSYLVANIA
REGISTERED PROFESSIONAL ENGINEER
DENISE WESSELS

NO.	REVISION	DATE

SHEET TITLE: STORMWATER DETAILS I

PROJECT TITLE: HEILMANDALE EXPANSION PHASE II PERMIT MODIFICATION

CLIENT: GREATER LEBANON REFUSE AUTHORITY
1610 RUSSELL ROAD
LEBANON, PENNSYLVANIA 17046

SCS ENGINEERS
STEARNS, CONRAD AND SCHMIDT CONSULTING ENGINEERS, INC.
22 DENVER ROAD; SUITE E - DENVER, PA 17517
PH. (610) 382-3050 SCSENGINEERS.COM

PROJ. NO. 02215800.05 | DWN. BY: SRS | Q/A RVW BY: DW
DSN. BY: ERS | CHK. BY: DW | APP. BY: DW

CADD FILE: SHT-34
DATE: JULY 2018
SCALE:
DRAWING NO. 34 of 36

M:\02215800.05 GLRA\DESIGN\SHT-34-35 STORMWATER DETAILS.DWG layout: DETAILS 1 plotted on: 7/18/2018 2:53 PM Sullivan, Sean

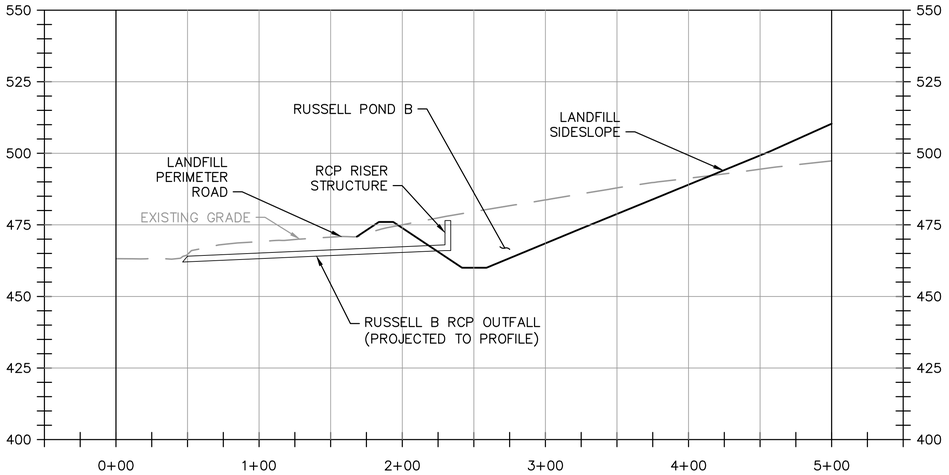

NEW BASIN RUSSELL B PROFILE

VERTICAL 0 25 50 75 SCALE IN FEET

HORIZONTAL 0 50 100 150 SCALE IN FEET

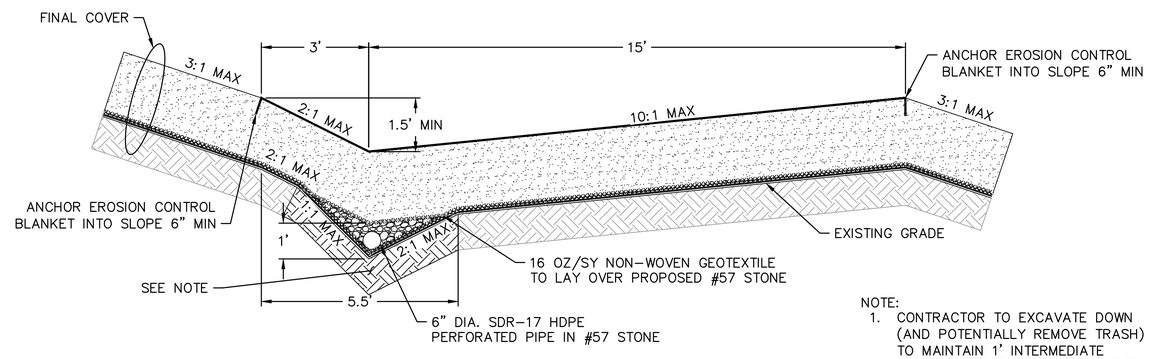

NOTE:
1. CONTRACTOR TO EXCAVATE DOWN (AND POTENTIALLY REMOVE TRASH) TO MAINTAIN 1' INTERMEDIATE COVER LAYER BELOW LINER SYSTEM.

LANDFILL TERRACE CROSS SECTION
TYPICAL FOR LONGITUDINAL SLOPES 3%–10% (1)

SCALE: 1"=2' 15,16,17,33 / 35

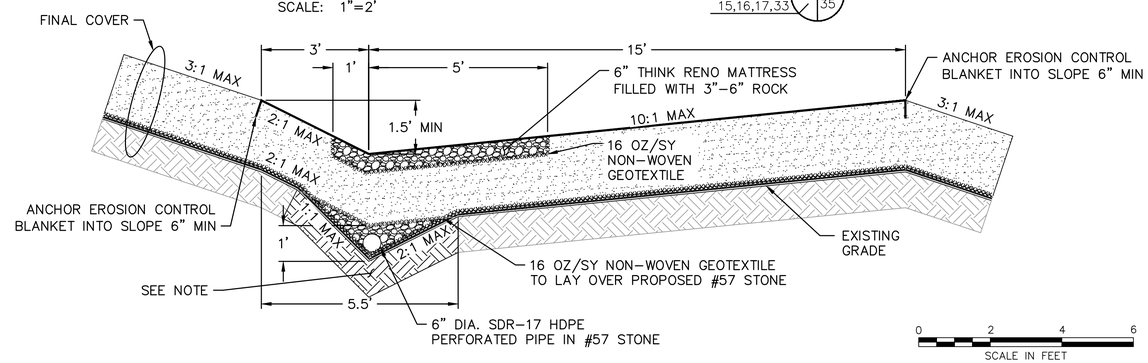

LANDFILL TERRACE CROSS SECTION
TYPICAL FOR LONGITUDINAL SLOPES 11%–16% (2)

SCALE: 1"=2' 15,16,17,33 / 35

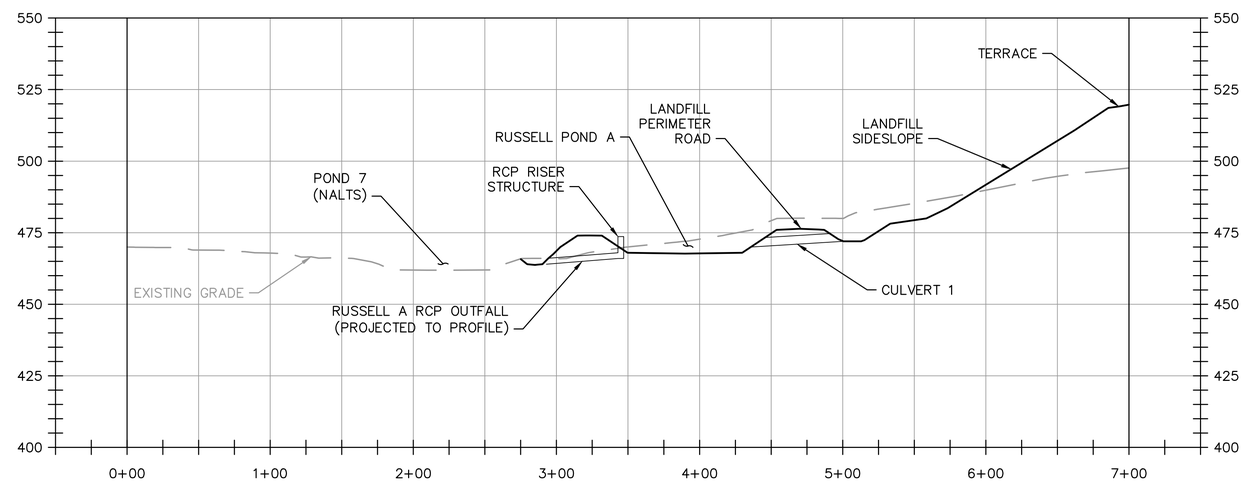

NEW BASIN RUSSELL A PROFILE

VERTICAL 0 25 50 75 SCALE IN FEET

HORIZONTAL 0 50 100 150 SCALE IN FEET

COMMONWEALTH OF PENNSYLVANIA REGISTERED PROFESSIONAL ENGINEER DENISE WESSELS

NO.	REVISION	DATE

SHEET TITLE: STORMWATER DETAILS II

PROJECT TITLE: HEILMANDALE EXPANSION PHASE II PERMIT MODIFICATION

CLIENT: GREATER LEBANON REFUSE AUTHORITY
1610 RUSSELL ROAD
LEBANON, PENNSYLVANIA 17046

SCS ENGINEERS
STEARNS, CONRAD AND SCHMIDT CONSULTING ENGINEERS, INC.
22 DENVER ROAD; SUITE E - DENVER, PA 17517
PH. (610) 382-3050 SCSENGINEERS.COM

PROJ. NO. 02215800.05 | DWN. BY: SRS | Q/A RVW BY: DW
DSN. BY: ERS | CHK. BY: DW | APP. BY: DW

CADD FILE: SHT-35

DATE: JULY 2018

SCALE:

DRAWING NO. 35 of 36

M:\02215800.05 GLRA\DESIGN\SHT-34-35 STORMWATER DETAILS.DWG layout: DETAILS II plotted on: 7/18/2018 2:53 PM Sullivan, Sean

APPENDIX C - STANDARD E&S PLAN NOTES

The following notes should be placed on the E&S plan drawings.

1. All earth disturbances, including clearing and grubbing as well as cuts and fills shall be done in accordance with the approved E&S plan. A copy of the approved drawings (stamped, signed and dated by the reviewing agency) must be available at the project site at all times. The reviewing agency shall be notified of any changes to the approved plan prior to implementation of those changes. The reviewing agency may require a written submittal of those changes for review and approval at its discretion.
2. At least 7 days prior to starting any earth disturbance activities, including clearing and grubbing, the owner and/or operator shall invite all contractors, the landowner, appropriate municipal officials, the E&S plan preparer, the PCSM plan preparer, the licensed professional responsible for oversight of critical stages of implementation of the PCSM plan, and a representative from the local conservation district to an on-site preconstruction meeting.
3. At least 3 days prior to starting any earth disturbance activities, or expanding into an area previously unmarked, the Pennsylvania One Call System Inc. shall be notified at 1-800-242-1776 for the location of existing underground utilities.
4. All earth disturbance activities shall proceed in accordance with the sequence provided on the plan drawings. Deviation from that sequence must be approved in writing from the local conservation district or by the Department prior to implementation.
5. Areas to be filled are to be cleared, grubbed, and stripped of topsoil to remove trees, vegetation, roots and other objectionable material.
6. Clearing, grubbing, and topsoil stripping shall be limited to those areas described in each stage of the construction sequence. General site clearing, grubbing and topsoil stripping may not commence in any stage or phase of the project until the E&S BMPs specified by the BMP sequence for that stage or phase have been installed and are functioning as described in this E&S plan.
7. At no time shall construction vehicles be allowed to enter areas outside the limit of disturbance boundaries shown on the plan maps. These areas must be clearly marked and fenced off before clearing and grubbing operations begin.
8. Topsoil required for the establishment of vegetation shall be stockpiled at the location(s) shown on the plan maps(s) in the amount necessary to complete the finish grading of all exposed areas that are to be stabilized by vegetation. Each stockpile shall be protected in the manner shown on the plan drawings. Stockpile heights shall not exceed 35 feet. Stockpile slopes shall be 2H:1V or flatter.
9. Immediately upon discovering unforeseen circumstances posing the potential for accelerated erosion and/or sediment pollution, the operator shall implement appropriate best management practices to minimize the potential for erosion and sediment pollution and notify the local conservation district and/or the regional office of the Department.
10. All building materials and wastes shall be removed from the site and recycled or disposed of in accordance with the Department's Solid Waste Management Regulations at 25 Pa. Code 260.1 et seq., 271.1, and 287.1 et. seq. No building materials or wastes or unused building materials shall be burned, buried, dumped, or discharged at the site.
11. All off-site waste and borrow areas must have an E&S plan approved by the local conservation district or the Department fully implemented prior to being activated.
12. The contractor is responsible for ensuring that any material brought on site is clean fill. Form FP-001 must be retained by the property owner for any fill material affected by a spill or release of a regulated substance but qualifying as clean fill due to analytical testing.
13. All pumping of water from any work area shall be done according to the procedure described in this plan, over undisturbed vegetated areas.
14. Vehicles and equipment may neither enter directly nor exit directly from lots __(specify lot numbers)__ onto ____(specify road names)_____.

15. Until the site is stabilized, all erosion and sediment BMPs shall be maintained properly. Maintenance shall include inspections of all erosion and sediment BMPs after each runoff event and on a weekly basis. All preventative and remedial maintenance work, including clean out, repair, replacement, regrading, reseeding, remulching and renetting must be performed immediately. If the E&S BMPs fail to perform as expected, replacement BMPs, or modifications of those installed will be required.
16. A log showing dates that E&S BMPs were inspected as well as any deficiencies found and the date they were corrected shall be maintained on the site and be made available to regulatory agency officials at the time of inspection.
17. Sediment tracked onto any public roadway or sidewalk shall be returned to the construction site by the end of each work day and disposed in the manner described in this plan. In no case shall the sediment be washed, shoveled, or swept into any roadside ditch, storm sewer, or surface water.
18. All sediment removed from BMPs shall be disposed of in the manner described on the plan drawings.
19. Areas which are to be topsoiled shall be scarified to a minimum depth of 3 to 5 inches — 6 to 12 inches on compacted soils — prior to placement of topsoil. Areas to be vegetated shall have a minimum 4 inches of topsoil in place prior to seeding and mulching. Fill outslopes shall have a minimum of 2 inches of topsoil.
20. All fills shall be compacted as required to reduce erosion, slippage, settlement, subsidence or other related problems. Fill intended to support buildings, structures and conduits, etc. shall be compacted in accordance with local requirements or codes.
21. All earthen fills shall be placed in compacted layers not to exceed 9 inches in thickness.
22. Fill materials shall be free of frozen particles, brush, roots, sod, or other foreign or objectionable materials that would interfere with or prevent construction of satisfactory fills.
23. Frozen materials or soft, mucky, or highly compressible materials shall not be incorporated into fills.
24. Fill shall not be placed on saturated or frozen surfaces.
25. Seeps or springs encountered during construction shall be handled in accordance with the standard and specification for subsurface drain or other approved method.
26. All graded areas shall be permanently stabilized immediately upon reaching finished grade. Cut slopes in competent bedrock and rock fills need not be vegetated. Seeded areas within 50 feet of a surface water, or as otherwise shown on the plan drawings, shall be blanketed according to the standards of this plan.
27. Immediately after earth disturbance activities cease in any area or subarea of the project, the operator shall stabilize all disturbed areas. During non-germinating months, mulch or protective blanketing shall be applied as described in the plan. Areas not at finished grade, which will be reactivated within 1 year, may be stabilized in accordance with the temporary stabilization specifications. Those areas which will not be reactivated within 1 year shall be stabilized in accordance with the permanent stabilization specifications.
28. Permanent stabilization is defined as a minimum uniform, perennial 70% vegetative cover or other permanent non-vegetative cover with a density sufficient to resist accelerated erosion. Cut and fill slopes shall be capable of resisting failure due to slumping, sliding, or other movements.
29. E&S BMPs shall remain functional as such until all areas tributary to them are permanently stabilized or until they are replaced by another BMP approved by the local conservation district or the Department.
30. Upon completion of all earth disturbance activities and permanent stabilization of all disturbed areas, the owner and/or operator shall contact the local conservation district for an inspection prior to removal/conversion of the E&S BMPs.
31. After final site stabilization has been achieved, temporary erosion and sediment BMPs must be removed or converted to permanent post construction stormwater management BMPs. Areas disturbed during removal or conversion of the BMPs shall be stabilized immediately. In order to ensure rapid revegetation of disturbed areas, such removal/conversions are to be done only during the germinating season.
32. Upon completion of all earth disturbance activities and permanent stabilization of all disturbed areas, the owner and/or operator shall contact the local conservation district to schedule a final inspection.

NOTE:

THIS PAGE SHOWS EXAMPLES OF DETAILS AND NOTES THAT MAY BE USED ON CONSTRUCTION DRAWINGS.

33. Failure to correctly install E&S BMPs, failure to prevent sediment-laden runoff from leaving the construction site, or failure to take immediate corrective action to resolve failure of E&S BMPs may result in administrative, civil, and/or criminal penalties being instituted by the Department as defined in Section 602 of the Pennsylvania Clean Streams Law. The Clean Streams Law provides for up to $10,000 per day in civil penalties, up to $10,000 in summary criminal penalties, and up to $25,000 in misdemeanor criminal penalties for each violation.

OPTIONAL NOTES

The following notes should be added to plan drawings as applicable.

1. Concrete wash water shall be handled in the manner described on the plan drawings. In no case shall it be allowed to enter any surface waters or groundwater systems.
2. All channels shall be kept free of obstructions including but not limited to fill, rocks, leaves, woody debris, accumulated sediment, excess vegetation, and construction material/wastes.
3. Underground utilities cutting through any active channel shall be immediately backfilled and the channel restored to its original cross-section and protective lining. Any base flow within the channel shall be conveyed past the work area in the manner described in this plan until such restoration is complete.
4. Channels having riprap, Reno mattress, or gabion linings must be sufficiently over-excavated so that the design dimensions will be provided after placement of the protective lining.
5. Sediment basins and/or traps shall be kept free of all construction waste, wash water, and other debris having potential to clog the basin/trap outlet structures and/or pollute the surface waters.
6. Sediment basins shall be protected from unauthorized acts by third parties.
7. Any damage that occurs in whole or in part as a result of basin or trap discharge shall be immediately repaired by the permittee in a permanent manner satisfactory to the municipality, local conservation district, and the owner of the damaged property.
8. Upon request, the applicant or his contractor shall provide an as-built (record drawing) for any sediment basin or trap to the municipal inspector, local conservation district or the Department.
9. Erosion control blanketing shall be installed on all slopes 3H:1V or steeper within 50 feet of a surface water and on all other disturbed areas specified on the plan maps and/or detail sheets.
10. Fill material for embankments shall be free of roots, or other woody vegetation, organic material, large stones, and other objectionable materials. The embankment shall be compacted in maximum _____layered lifts at _____% density.

STANDARD CONSTRUCTION DETAIL # 4-14
Rock Filter

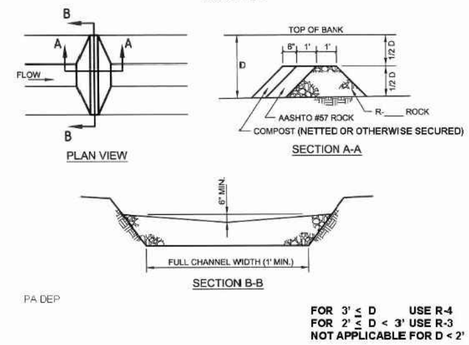

PA DEP

FOR 3' ≤ D USE R-4
FOR 2' ≤ D < 3' USE R-3
NOT APPLICABLE FOR D < 2'

STANDARD CONSTRUCTION DETAIL # 3-1
Rock Construction Entrance

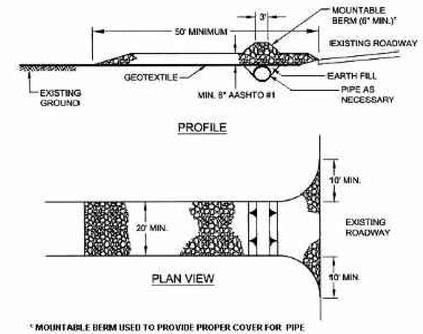

* MOUNTABLE BERM USED TO PROVIDE PROPER COVER FOR PIPE

STANDARD CONSTRUCTION DETAIL #3-11
Compost Sock Sediment Trap

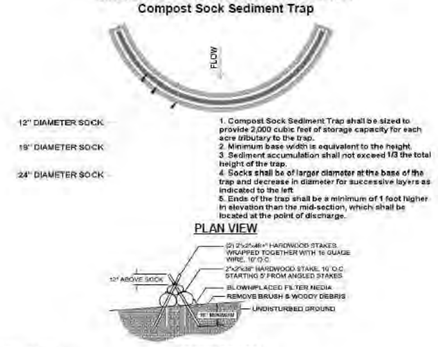

Adapted from Filtrexx

STANDARD CONSTRUCTION DETAIL # 4-10
Super Silt Fence

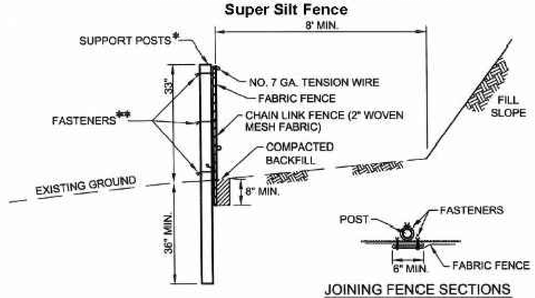

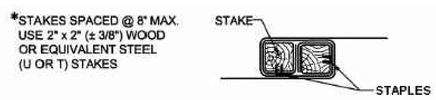

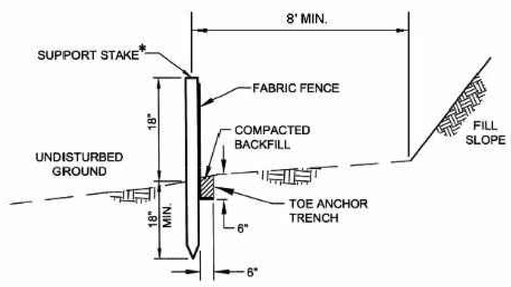

PA DEP

FIGURE 4.1
Sediment Barrier Alignment

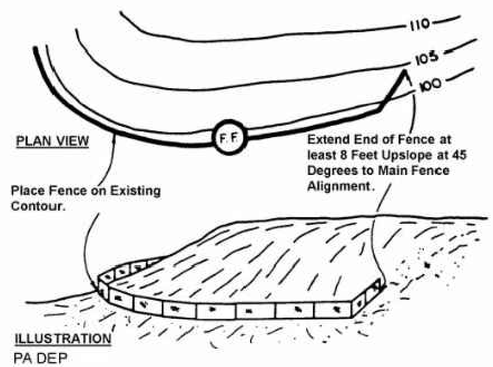

PA DEP

COMMONWEALTH OF PENNSYLVANIA
REGISTERED PROFESSIONAL ENGINEER
DENISE WESSELS

NO.	REVISION	DATE

SHEET TITLE: EROSION & SEDIMENT CONTROL DETAILS

PROJECT TITLE: HEILMANDALE EXPANSION PHASE II PERMIT MODIFICATION

CLIENT: GREATER LEBANON REFUSE AUTHORITY
1610 RUSSELL ROAD
LEBANON, PENNSYLVANIA 17046

SCS ENGINEERS
STEARNS, CONRAD AND SCHMIDT CONSULTING ENGINEERS, INC.
22 DENVER ROAD; SUITE E - DENVER, PA 17517
PH. (610) 382-3050 SCSENGINEERS.COM

PROJ. NO. 02215800.05 | DWN. BY: SRS | Q/A RVW BY: DW
DSN. BY: ERS | CHK. BY: DW | APR. BY: DW

CADD FILE: SHT-38
DATE: JULY 2018
SCALE: AS SHOWN
DRAWING NO. 36 of 36

M:\02215800.05 GLRA\DESIGN\SHT-36 EROSION & SEDIMENT CONTROL PLAN.DWG layout: SHT-36 plotted on: 7/18/2018 2:53 PM Sullivan, Sean