3150-PM-BWEW0500 Rev. 3/2018
Form

pennsylvania
DEPARTMENT OF ENVIRONMENTAL PROTECTION

COMMONWEALTH OF PENNSYLVANIA
DEPARTMENT OF ENVIRONMENTAL PROTECTION
BUREAU OF WATERWAYS ENGINEERING AND WETLANDS

CHAPTER 105 WATER OBSTRUCTIONS AND ENCROACHMENT GENERAL PERMIT REGISTRATION

SECTION A. APPLICANT INFORMATION

☒ **FERC Natural Gas Activity** **Docket Number** CP 18-46 **Type of Facility** Pipeline Valve

Has a Water Quality Certification (WQC) request been sent to DEP? ☒ **Yes** ☐ **No**

☒ **Activity Subject to FERC approval and/or Oil & Gas Exploration, Production, Storage or Transmission if the activity is regulated by FERC and provide the FERC docket number.**

Applicant's Name / Client	**DEP Client ID#** (if known)	**Employer ID#** (EIN)
Adelphia Gateway Company, LLC		

Client Information - Please select Client Type / Code from drop down box under the correct entity shown to the right. (or may be written in) →	**Government**	**Non-Government**	**Individual**
		LLC	

Mailing Address	**City**	**State**	**ZIP + 4**
Adelphia Gateway, LLC 1415 Wyckoff Road	Wall	NJ	07719

Contact Person – Last Name	First	MI	Suffix	**Telephone**	**Email Address**
Valori	Mark	F		(732) 938-1169	mvalori@NJResources.com

SECTION B. CONSULTANT INFORMATION (If applicable) ☐ N/A

Contact Person – Last Name	First	MI	Suffix	**Consultants Title**	**Consulting Firm**
Hess	Jonathan	D		Project Manager	NV5, LLC

Mailing Address	**City**	**State**	**ZIP + 4**
1315 Walnut Street #900	Philadelphia	PA	19107

Telephone	**Fax**	**Email**	**Employer ID# (EIN)**
(484) 775-0485	( )	Jonathan.Hess@nv5.com	75-3031709

SECTION C. PROJECT INFORMATION

Project / Site Name	**DEP Site ID# (if known or leave blank)**
Adelphia Gateway Project	

Client Relationship - Please select Site-to-Client Relationship / Code from drop down box to the right. (or may be written in) →	Double-click on shaded area below to select correct Site-to-Client Relationship / Code ↓
	Owner-Operator / OWNOP

County	**Municipality** ☐ City ☐ Borough ☒ Township	**Note: Municipal & County Notification is Required**
Chester	East Goshen	

Site Location / Address	**City**	**State**	**ZIP + 4**
1487 Paoli Pike	West Chester	PA	19380

Collection Method: ☐ EMAP ☐ HGIS ☐ GISDR* ☐ ITPMP ☒ GPS ☐ WAAS ☐ LORAN

Check the horizontal reference datum (or projection datum) employed in the collection method.

EMAP and HGIS (PNDI) have known datum and do not require checking here. ☐ NAD27 ☒ NAD83 ☐ WGS84 (GEO84) LAT.: see Aquatic Resources Impacts Table LONG.: see Aquatic Resources Impacts Table

NOTE: A Submerged Lands License Agreement (SLLA) with an annual fee, if applicable, may also be required for your project. You will be notified if an SLLA is required.

The Aquatic Resources Impact Table (SECTION E. PROPOSED IMPACTS) must be completed or equivalent submitted for this registration to be complete.

SECTION D. REGISTRATION CHECKLIST AND REQUIREMENTS

Please place an "X" next to each item (1-9) to ensure it is completed and/or provided.

Unless otherwise specified, all items are ***required*** to ensure a complete Registration package.

Provide ONE (1) ORIGINAL and ONE (1) COPY of the Registration package

Please provide a copy of the Registration form to the Municipality & County in which the work will be performed. Proof of receipt is not required to be provided to DEP.

1. REGISTERING A GENERAL PERMIT (GP) check all that apply

Federal, State, county or municipal agencies or municipal authorities: ☐ **EXEMPT from fees**

☐ GP-1	Fish Habitat Enhancement Structures	Per Project	$ 50	= $ ____
☐ GP-2	Small Docks and Boat Launching Ramps	Per Dock / Ramp ____ (#) x	$ 175	= $ ____
☐ GP-3	Bank Rehabilitation, Bank Protection and Gravel Bar Removal	Per Project ____ (#) x	$ 250	= $ ____
☐ GP-4	Intake and Outfall Structures	Per Structure ____ (#) x	$ 200	= $ ____
☐ GP-5	Utility Line Stream Crossings	Per Individual Utility ____ (#) x ____ (#) x	$ 250	= $ ____
☐ GP-6	Agricultural Crossings and Ramps	Per Crossing / Ramp ____ (#) x	$ 50	= $ ____
☐ GP-7	Minor Road Crossings[2]	Per Crossing ____ (#) x	$ 350	= $ ____
☒ GP-8	Temporary Road Crossings[2]	Per Crossing 1 (#) x	$ 175	= $ 175
☐ GP-9	Agricultural Activities	Per Project	$ 50	= $ ____
☐ GP-10	Abandoned Mine Reclamation	Per Project	$ 500	= $ ____
☒ GP-11	Maintenance, Testing, Repair, Rehabilitation, or Replacement of Water Obstructions and Encroachments[1]		$ 750	+
	☐ Temporary Disturbance ($400/0.1ac)	0.1 acres x $4,000 =	$ 400	+
	☐ Permanent Disturbance ($800/0.1ac)	0.1 acres x $8,000 =	$ 800	= $ 1950
☐ GP-15	Private Residential Construction in Wetlands[1]		$ 750	+
	☐ Temporary Disturbance ($400/0.1ac)	____ acres x $4,000 =	$ ____	+
	☐ Permanent Disturbance ($800/0.1ac)	____ acres x $8,000 =	$ ____	= $ ____
			GP(s) FEE subtotal (b)	$ 2125

	Applicant Entry	DEP Use Only
2. Location Map (USGS quad map) with project site marked:	x	☐
3. Color Photographs with dates, locations, and descriptions: ☐ GP-3 ■ GP-11 ☐ **N/A**	x	☐
4. Project Description: (Example: Linear pipeline project using multiple GP-5's and GP-8's; One GP-7 for an access road to my property**)** Linear pipeline enhancement project that requires a GP-11 for installation of blowdown assemblies at existing mainline valve. Additional permit registration packages for the Project are being filed for other Project facilities located in other counties.	x	☐
5. Site Specific and/or Standard Drawings are **(required for all)** project's GP activities. For Activities that qualify for GP-7 or GP-11 see E&S Plan Plans, specifications, and reports for bridges and culverts across a stream which are to be used by the general public such as an access to an industrial, commercial or residential development, etc., shall be prepared by a registered professional engineer and shall be affixed with their seal and certification which shall read as follows on the drawings: If the project includes a bridge or culvert replacement or the proposed work will change the waterway opening, please complete and provide the Bridge and/or Culvert Replacement Projects or Projects That Change the Waterway Opening (3150-PM-BWEW0552B) worksheet. If the project consists of similar work (replacement or change in waterway opening) on more than one structure, provide the data requested for each structure included in this Registration package. *"I (name) do hereby certify pursuant to the penalties of 18 Pa. C.S.A. Sec. 4904 to the best of my knowledge, information and belief, that the information contained in the accompanying plans, specifications, and reports has been prepared in accordance with accepted engineering practice, is true and correct, and is in conformance with Chapter 105 of the rules and regulations of the Department of Environmental Protection."*	x	☐
6. Proposed Project Purpose depicting the site of the projects GP activities and impacts. Briefly discuss the need for the authorization. see attached	x	☐
7. Erosion & Sediment Control Plan (E&S Plan) (Required for all GP's but specifically required with submission with a registration of GP-11 or GP's for oil and gas related activities submitted to DEP.)	x	☐
8. Pennsylvania Natural Diversity Inventory (PNDI): PNDI Search Receipt and clearance letters, if available. See additional requirements for submission with Avoidance Measures and/or Potential Impacts.	X	☐
9. Activities which impact wetlands: (For State Regulated Impacts) **Please place an "X" next to the appropriate box indicating the information provided:**		
➢ N/A because no wetland impacts are proposed or no compensatory mitigation is necessary.	☐	☐
➢ A wetland delineation with complete data sheets in accordance with the 1987 Corps of Engineers Wetland Delineation Manual AND the appropriate Regional Supplements to the Corps of Engineers Wetland Delineation Manual for use in Pennsylvania.....	x	☐
➢ If direct or indirect wetland impacts are greater than 0.05 acre, a compensatory mitigation plan in accordance with the Department's Replacement criteria which provides compensation for both affected acreage, and functions at a minimum of one to one ratio.	☐	☐
➢ **If compensatory mitigation onsite is determined not feasible:** A check, number _____, in the amount of $ _____ payable to the National Fish and Wildlife Foundation, N.A. 1237, as compensatory mitigation for _____ acres of impact in wetlands, in accordance with the Pennsylvania Wetland Replacement Project.....	☐	☐
(Additional Mitigation May Be Required by U.S. Army Corps)	☐	☐
NOTE: If the Pennsylvania Wetland Replacement Fund is proposed to be used as compensatory mitigation for waters of the Commonwealth the U.S. Army Corps of Engineers may also require additional mitigation if the proposed activity impacts waters of the United States.		

3150-PM-BWEW0557 Rev 4/2018
Application

pennsylvania
DEPARTMENT OF ENVIRONMENTAL PROTECTION

COMMONWEALTH OF PENNSYLVANIA
DEPARTMENT OF ENVIRONMENTAL PROTECTION
BUREAU OF WATERWAYS ENGINEERING AND WETLANDS

Applicant's Name / Client Adelphia Gateway Company, LLC

AQUATIC RESOURCE IMPACT TABLE

FOR PENNSYLVANIA CHAPTER 105 WATER OBSTRUCTION AND ENCROACHMENT APPLICATION / REGISTRATION

Project / Site Name: Paoli Pike Blowdown Date: 09/26/2018

DEP USE ONLY			Project Information									PADEP / 105		
PADEP Permit Number	Single Complete Crossing No.	Crossing Number	Fee	Structure / Activity unique identifier	Aquatic Resource Type	Latitude dd nad83	Longitude dd nad83	Waters Name	PA Code Chapter 93 Designation	Work Proposed	DEP Impact Type temp / perm	Watercourse Impact Top of Bank to Top of Bank Length and Width in feet	Floodway* Impact Top of Bank Landward Length and Width in feet	Wetland* Impact Dimension Length and Width in feet
			$400	PP-W-1	PEM	39°59'27"N	75°32'59"W		N/A	excavation	Temp	-	-	60 x 30
			$800	PP-W-1	PEM	39°59'27"N	75°32'59"W		N/A	excavation	Perm	-	-	24 x 30
			N/A	PP-FP-1	Parallel	39°59'26.91"N	75°32'58.51"W		N/A	excavation	Temp	-	21 x 9	-
			N/A	PP-FP-2	Parallel	39°59'27.04"N	75°32'58.57"W		N/A	excavation	Perm	-	18 x 8	-
			N/A	PP-FP-3	Parallel	39°59'26.98"N	75°32'58.34"W		N/A	access road	Temp	-	8 x 6 -	-
												-	-	-
			$175	PP-W-1	PEM	39°59'27.06"N	75°32'59.03"W		N/A	Temp Road Crossing	Temp	-	-	31 x 19
												-	-	-

PADEP Impact Type: temporary or permanent.

Permanent Impacts are those areas affected by a water obstruction or encroachment that consist of both direct and indirect impacts that result from the placement or construction of a water obstruction or encroachment and include areas necessary for the operation and maintenance of the water obstruction or encroachment located in, along or across, or projecting into a watercourse, floodway or body of water.

Temporary Impacts are those areas affected during the construction of a water obstruction or encroachment that consists of both direct and indirect impacts located in, along or across, or projecting into a watercourse, floodway or body of water that are restored upon completion of construction. This does not include areas that will be maintained as a result of the operation and maintenance of the water obstruction or encroachment located in, along or across, or projecting into a watercourse, floodway or body of water (these are considered permanent impacts).

* Wetland and Floodway shapes are irregular. Measurements provided are for the polygons' greatest lengths and widths.

SECTION F. CERTIFICATION

I certify under penalty of law that the information provided in this permit registration is true and correct to the best of my knowledge and information and that I possess the authority to undertake the proposed action. I am aware that there are significant penalties for submitting false information, including the possibility of fine and imprisonment for knowing violations. (If any of the information and/or plans is found to be in error, falsified, and/or incomplete, this authorization/verification may be subject to modification, suspension, or revocation in accordance with applicable regulations.) I further certify that this project complies with all the conditions of the general permit.

DS WS

Signature of Applicant / Owner

6/26/2018
Date

Mark F. Valori
Typed / Printed Name

Vice President
Typed / Printed Title

This General Permit shall not be effective until the owner has had their E&S Plan reviewed by the appropriate Regional Office or District, and, where required, obtained an SLLA from DEP.

THIS ACKNOWLEDGED COPY OF THIS GENERAL PERMIT REGISTRATION PACKAGE AND THE E&S PLAN MUST BE AVAILABLE AT THE PROJECT SITE DURING CONSTRUCTION.

SECTION G. DECISION / DISPOSITION – COMPLETED BY DEP

Decision Review:

DEP / District Reviewer Signature — GP

Reviewer's Typed / Printed Name — GP

NOTE: See Aquatic Resource Impact Table for any additional authorizations.

Disposition Status		Comments
☐ **ACKNOWLEDGED**	Date	
SLLA Required	☐ Yes Attached ☐ No	
☐ **INCOMPLETE / DEFICIENCY**	Date	
☐ **EXTENSION REQUEST**	Date	
☐ **WITHDRAWN**	Date	

NOTE: If the GP registration information is incomplete a copy of this registration form and requested additional information will be sent to the applicant. A copy of the returned registration form and additional information must be re-submitted within 60 calendar days unless extended by the extension date listed above.

☐ **FEDERAL AUTHORIZATION**

- ☐ Non-reporting PASPGP verification / authorization attached.
- ☐ Reporting – A copy of this General Permit registration package has been sent to the U.S. Army Corps of Engineers. Separate federal authorization may be required

NOTE: Please be advised that if the reporting box is checked you do not have Federal authorization for this project and such authorization may be required prior to starting your project. In accordance with Section 404 of the Clean Water Act, a Department of the Army authorization is required for the discharge of dredged and/or fill material into waters of the United States, including jurisdictional wetlands. Section 10 of the Rivers and Harbors Act also requires Department of the Army authorization for any work in, over, or under a navigable water of the United States. In accordance with procedures established with the U.S. Army Corps of Engineers, you will be contacted directly by the Corps regarding Federal Authorization.

D-2: Location Map

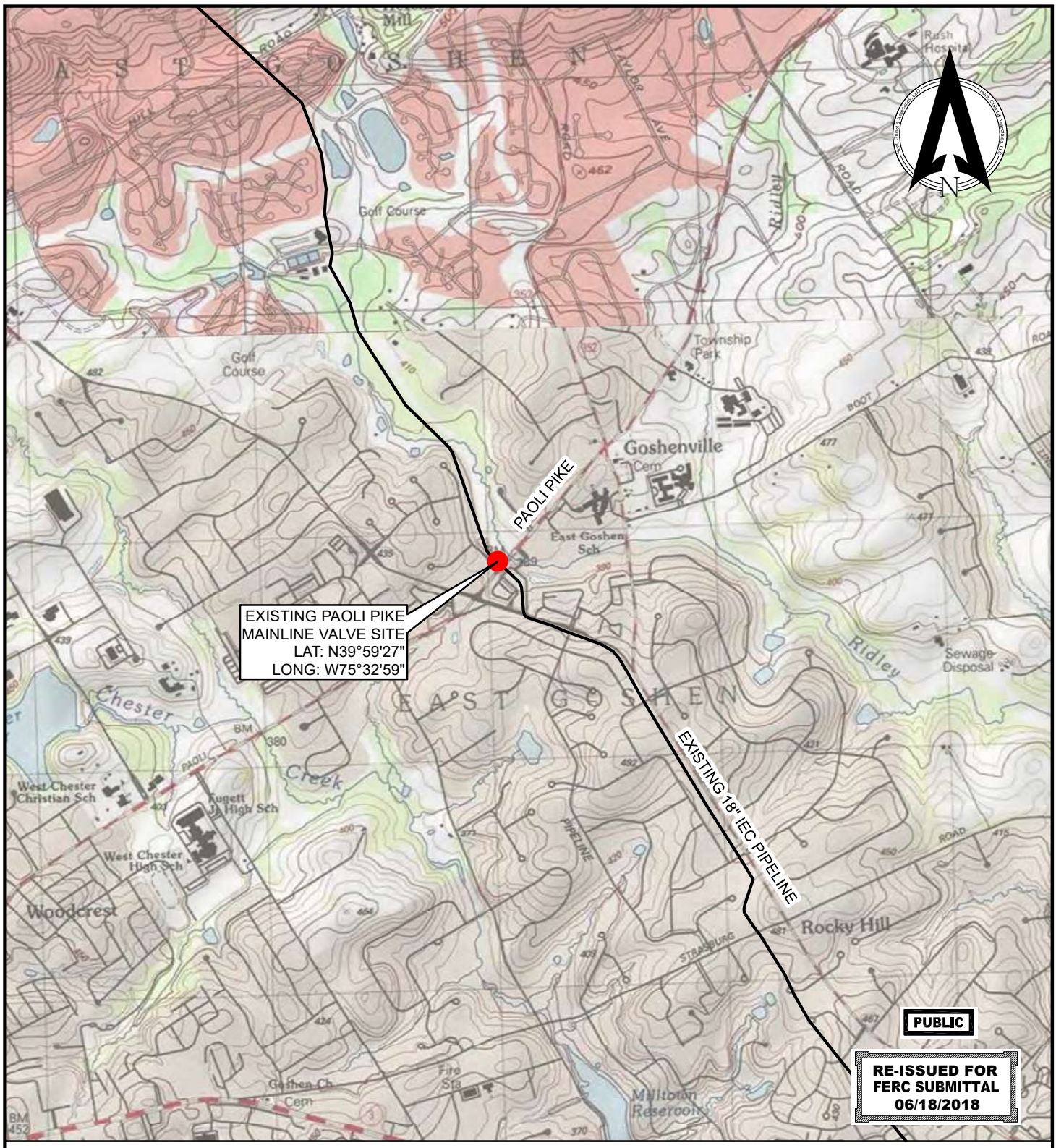

LEGEND

- EXISTING MAINLINE VALVE SITE
- EXISTING PIPELINE

0 2,000 4,000 Feet

NOTES

DRG 7.5 MIN. QUAD MAP:
-o39075h5 (WESTCHESTER, PA)

HUNT, GUILLOT & ASSOCIATES, LLC
ONE METROPLEX DRIVE, SUITE 100
BIRMINGHAM, AL 35209
PHONE:205-970-4977
FIRM # PA 4004148

REV	DESCRIPTION	CHK	DATE	APP	DATE
1	RE-ISSUED FOR FERC	MEH	06/18/2018	RCH	06/18/2018
0	ISSUED FOR FERC	MEH	12/29/2017	RCH	12/29/2017

DRAWN BY	MSF	12/15/17
DESIGNED BY	PLH	12/15/17
CHECKED BY	MEH	12/21/17
APPROVED BY	RCH	12/21/17
HGA JOB NO.	8.A17022.01.0	
PLOT SCALE	1:1	
MODEL ID	8.A17022	

ADELPHIA GATEWAY, LLC
PROJECT LOCATION MAP
PAOLI PIKE BLOWDOWN M.P. 14.46
CHESTER COUNTY, PENNSYLVANIA

SCALE	DRAWING NUMBER	REV
1" = 2000'	RR01-FIGURE 1-19a	1

phumphrey 6/18/2018 8:50:28 AM

RR01 - FIGURE 1-19a

D-3: Color Photographs

PHOTOLOG

Project Name:	Location:
Adelphia Gateway Project	Paoli Pike Wetland DP1 Chester County, PA

Date:	Photo:
2/27/2018	1

Coordinates:

39.990924º N
-75.54972º W

Comment:

Photo of PEM wetland facing northwest.

PHOTOLOG

Project Name:	Location:
Adelphia Gateway Project	Paoli Pike Upland DP2 Chester County, PA

Date:	Photo:
2/27/2018	2

Coordinates:

39.990861º
-75.54956º.

Comment:

Photo of uplands facing northeast.

D-5: Site Specific Drawings

LEGEND

- Existing Pipeline
- ROW
- Survey Corridor
- Paoli Pike MLV Site
- Paoli Pike TWS
- Access Road
- PEM Wetland
- PSS Wetland
- PFO Wetland
- FEMA Floodway
- Field-delineated
- Desktop-delineated

NV5
www.NV5.com

REV	DESCRIPTION	CHK	DATE	APP	DATE

DRAWN BY	DD	9/24/2018
DESIGNED BY	DD	9/24/2018
CHECKED BY	XXX	XX/XX/18
APPROVED BY	XXX	XX/XX/18
NV5 JOB NO.	527317-0000050.00	
PLOT SCALE	1:1	
MODEL ID	XXXXXX	

Adelphia Gateway Project
Paoli Pike Wetland
Delaware County, Pennsylvania

SCALE	DRAWING NUMBER	REV
AS SHOWN	527317_0000050_00_Paoli_Pike	1

darryl.delfrate 9/24/2018 11:07:05 AM

D-6: Proposed Project Purpose

Proposed Project Purpose

The Adelphia Gateway Project is designed to increase available natural gas pipeline capacity to the Greater Philadelphia industrial region with the potential to serve additional markets in the Northeast while continuing to provide uninterrupted service to two existing power plants at the northern end of the system, the Lower Mount Bethel Power Plant and the Martins Creek Power Plant. The Project would achieve this objective by using and enhancing Interstate Energy Company's existing natural gas and oil pipeline system located in eastern Pennsylvania. Necessary enhancements include the construction of eight new blowdown assemblies at existing mainline valves (MLV) along an existing 18-inch pipeline, including the proposed Paoli Pike Blowdown.

With the exception of some temporary work space required to construct the facility, the Paoli Pike Blowdown would be constructed and operated entirely within the existing pipeline's permanent, maintained right-of-way. All temporary work space used for the installation of the Blowdown would be restored to its pre-construction conditions following construction. To install the new Blowdown, Adelphia would clear, grade, and excavate, as necessary, to access the existing pipeline. Adelphia would then remove small sections of existing pipe on either side of the existing MLV and install the Blowdown in its place. Adelphia would then backfill the excavated areas with the same material that was removed from the trench and restore the area to pre-construction conditions. Due to the location of the existing MLV at which the Paoli Pike Blowdown would be located, Project activities would result in both temporary and permanent wetland impacts at the site. A figure in Adelphia's Wetland and Waterbody Delineation Report shows the location of proposed work at the Paoli Pike Blowdown Site.

D-7: Erosion & Sediment Control Plan

ADELPHIA GATEWAY PROJECT

EROSION AND SEDIMENTATION CONTROL PLAN AND POST CONSTRUCTION STORMWATER MANAGEMENT PLAN

Revised Submission - 1/18/2019

GP111518315

SITE LOCATION MAP

NOT TO SCALE

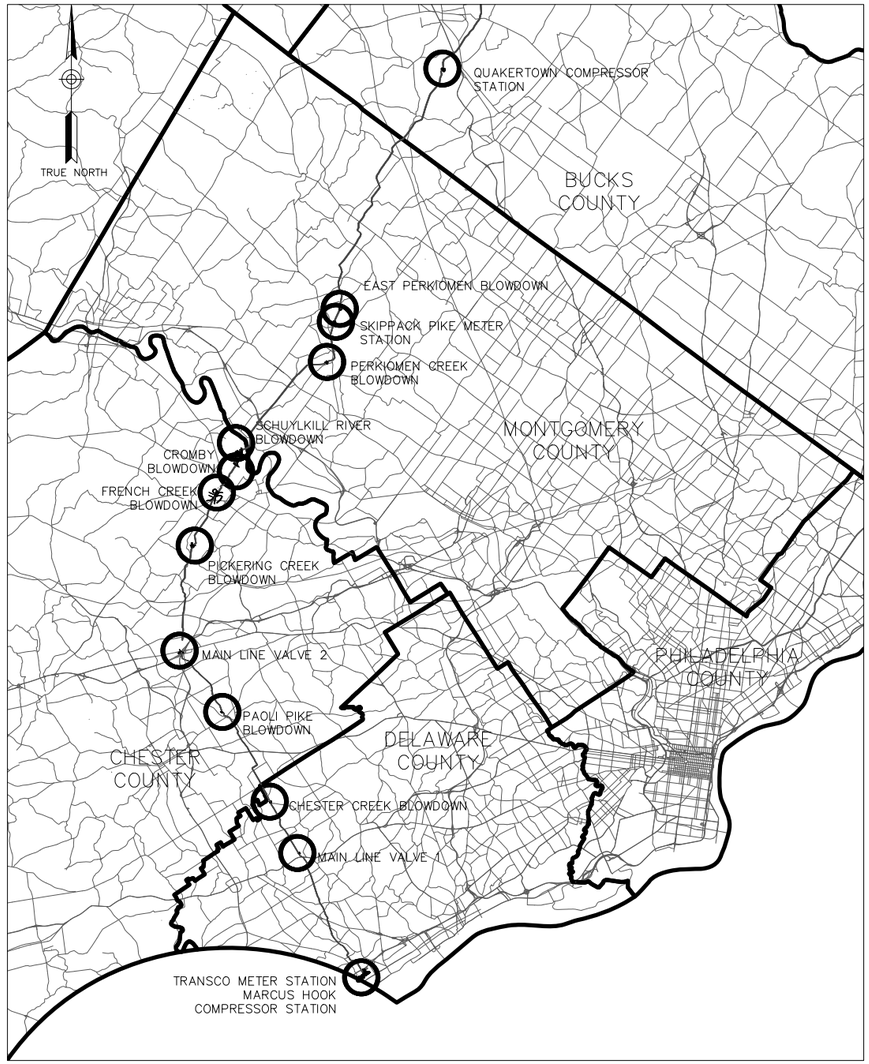

SHEETS NOT INCLUDED IN THIS SUBMISSION

DRAWING INDEX

SHEET NO.	SHEET TITLE	COUNTY
ES-1	COVER/INDEX SHEET	ALL
ES-2	GENERAL NOTES SHEET 1 OF 4	ALL
ES-3	GENERAL NOTES SHEET 2 OF 4	ALL
ES-4	GENERAL NOTES SHEET 3 OF 4	ALL
ES-5	GENERAL NOTES SHEET 4 OF 4	ALL
ES-6	DETAILS SHEET 1 OF 2	ALL
ES-7	DETAILS SHEET 2 OF 2	ALL
ES-12	PAOLI PIKE BLOWDOWN	CHESTER

CONFIDENTIAL

THESE DESIGNS AND DRAWINGS ARE CONFIDENTIAL & ARE THE EXCLUSIVE PROPERTY OF: NV5, INC., PHILADELPHIA, PENNSYLVANIA. NO COPY OR REPRODUCTION MAY BE MADE WITHOUT WRITTEN APPROVAL.

ADELPHIA GATEWAY

COMMONWEALTH OF PENNSYLVANIA REGISTERED PROFESSIONAL MICHAEL JAMES CONNOR ENGINEER No. 078570-E

DATE: 10/25/18

REV	DESCRIPTION	CHK	DATE	APP	DATE

REVISION

DRAWN BY	DB	10/25/18
DESIGNED BY	ML	10/25/18
CHECKED BY	MC	10/25/18
APPROVED BY	RH	
NV5 JOB NO.	27317-0000050	
PLOT SCALE		
MODEL ID		

NV5

NV5, Inc.
1315 Walnut Street, Suite 900
Philadelphia, PA 19107
T: 215-751-1133

EROSION & SEDIMENT CONTROL PLAN
ADELPHIA GATEWAY PROJECT
COVER/INDEX SHEET

SCALE	DRAWING NUMBER	REV
N/A	ES-1	

STANDARD E&S NOTES:

1. ALL EARTH DISTURBANCES, INCLUDING CLEARING AND GRUBBING AS WELL AS CUTS AND FILLS SHALL BE DONE IN ACCORDANCE WITH THE APPROVED E&S PLAN. A COPY OF THE APPROVED DRAWINGS (STAMPED, SIGNED AND DATED BY THE REVIEWING AGENCY) MUST BE AVAILABLE AT THE PROJECT SITE AT ALL TIMES. THE REVIEWING AGENCY SHALL BE NOTIFIED OF ANY CHANGES TO THE APPROVED PLAN PRIOR TO IMPLEMENTATION OF THOSE CHANGES. THE REVIEWING AGENCY MAY REQUIRE A WRITTEN SUBMITTAL OF THOSE CHANGES FOR REVIEW AND APPROVAL AT ITS DISCRETION.

2. AT LEAST 7 DAYS PRIOR TO STARTING ANY EARTH DISTURBANCE ACTIVITIES, INCLUDING CLEARING AND GRUBBING, THE OWNER AND/OR OPERATOR SHALL INVITE ALL CONTRACTORS, THE LANDOWNER, APPROPRIATE MUNICIPAL OFFICIALS, THE E&S PLAN PREPARER, THE PCSM PLAN PREPARER, THE LICENSED PROFESSIONAL RESPONSIBLE FOR OVERSIGHT OF CRITICAL STAGES OF IMPLEMENTATION OF THE PCSM PLAN, AND A REPRESENTATIVE FROM THE LOCAL CONSERVATION DISTRICT TO AN ON-SITE PRECONSTRUCTION MEETING.

3. AT LEAST 3 DAYS PRIOR TO STARTING ANY EARTH DISTURBANCE ACTIVITIES, OR EXPANDING INTO AN AREA PREVIOUSLY UNMARKED, THE PENNSYLVANIA ONE CALL SYSTEM INC. SHALL BE NOTIFIED AT 1-800-242-1776 FOR THE LOCATION OF EXISTING UNDERGROUND UTILITIES.

4. ALL EARTH DISTURBANCE ACTIVITIES SHALL PROCEED IN ACCORDANCE WITH THE SEQUENCE PROVIDED ON THE PLAN DRAWINGS. EACH STAGE SHALL BE COMPLETED AND IMMEDIATELY STABILIZED BEFORE ANY FOLLOWING STAGE IS INITIATED. DEVIATION FROM THAT SEQUENCE MUST BE APPROVED IN WRITING FROM THE CONSERVATION DISTRICT OR BY THE PADEP PRIOR TO IMPLEMENTATION.

5. AREAS TO BE FILLED ARE TO BE CLEARED, GRUBBED, AND STRIPPED OF TOPSOIL TO REMOVE TREES, VEGETATION, ROOTS AND OTHER OBJECTIONABLE MATERIAL.

6. CLEARING, GRUBBING, AND TOPSOIL STRIPPING SHALL BE LIMITED TO THOSE AREAS DESCRIBED IN EACH STAGE OF THE CONSTRUCTION SEQUENCE. GENERAL SITE CLEARING, GRUBBING AND TOPSOIL STRIPPING MAY NOT COMMENCE IN ANY STAGE OR PHASE OF THE PROJECT UNTIL THE E&S BMPS SPECIFIED BY THE BMP SEQUENCE FOR THAT STAGE OR PHASE HAVE BEEN INSTALLED AND ARE FUNCTIONING AS DESCRIBED IN THIS E&S PLAN.

7. AT NO TIME SHALL CONSTRUCTION VEHICLES BE ALLOWED TO ENTER AREAS OUTSIDE THE LIMIT OF DISTURBANCE BOUNDARIES SHOWN ON THE PLAN MAPS. THESE AREAS MUST BE CLEARLY MARKED AND FENCED OFF BEFORE CLEARING AND GRUBBING OPERATIONS BEGIN.

8. TOPSOIL REQUIRED FOR THE ESTABLISHMENT OF VEGETATION SHALL BE STOCKPILED AT THE LOCATION(S) SHOWN ON THE PLAN MAPS(S) IN THE AMOUNT NECESSARY TO COMPLETE THE FINISH GRADING OF ALL EXPOSED AREAS THAT ARE TO BE STABILIZED BY VEGETATION. EACH STOCKPILE SHALL BE PROTECTED IN THE MANNER SHOWN ON THE PLAN DRAWINGS. STOCKPILE HEIGHTS SHALL NOT EXCEED 35 FEET. STOCKPILE SLOPES SHALL BE 2H:1V OR FLATTER.

9. IMMEDIATELY UPON DISCOVERING UNFORESEEN CIRCUMSTANCES POSING THE POTENTIAL FOR ACCELERATED EROSION AND/OR SEDIMENT POLLUTION, THE OPERATOR SHALL IMPLEMENT APPROPRIATE BEST MANAGEMENT PRACTICES TO MINIMIZE THE POTENTIAL FOR EROSION AND SEDIMENT POLLUTION AND NOTIFY THE LOCAL CONSERVATION DISTRICT AND/OR THE REGIONAL OFFICE OF THE DEPARTMENT.

10. ALL OFF-SITE WASTE AND BORROW AREAS MUST HAVE AN E&S PLAN APPROVED BY THE RESPECTIVE COUNTY CONSERVATION AGENCY FULLY IMPLEMENTED PRIOR TO BEING ACTIVATED.

11. ALL PUMPING OF WATER FROM ANY WORK AREA SHALL BE DONE ACCORDING TO THE PROCEDURE DESCRIBED IN THIS PLAN, OVER UNDISTURBED VEGETATED AREAS.

12. UNTIL THE SITE IS STABILIZED, ALL EROSION AND SEDIMENT BMPS SHALL BE MAINTAINED PROPERLY. MAINTENANCE SHALL INCLUDE INSPECTIONS OF ALL EROSION AND SEDIMENT BMPS AFTER EACH RUNOFF EVENT AND ON A WEEKLY BASIS. ALL PREVENTATIVE AND REMEDIAL MAINTENANCE WORK, INCLUDING CLEAN OUT, REPAIR, REPLACEMENT, REGRADING, RESEEDING, REMULCHING AND RENETTING MUST BE PERFORMED IMMEDIATELY. IF THE E&S BMPS FAIL TO PERFORM AS EXPECTED, REPLACEMENT BMPS, OR MODIFICATIONS OF THOSE INSTALLED WILL BE REQUIRED.

13. THE CONTRACTOR IS RESPONSIBLE FOR ENSURING THAT ANY MATERIAL BROUGHT ON SITE IS CLEAN FILL. FORM FP-001 MUST BE RETAINED BY THE PROPERTY OWNER FOR ANY FILL MATERIAL AFFECTED BY A SPILL OR RELEASE OF A REGULATED SUBSTANCE BUT QUALIFYING AS CLEAN FILL DUE TO ANALYTICAL TESTING.

14. A LOG SHOWING DATES THAT E&S BMPS WERE INSPECTED AS WELL AS ANY DEFICIENCIES FOUND AND THE DATE THEY WERE CORRECTED SHALL BE MAINTAINED ON THE SITE AND BE MADE AVAILABLE TO REGULATORY AGENCY OFFICIALS AT THE TIME OF INSPECTION.

15. SEDIMENT TRACKED ONTO ANY ROADWAY OR SIDEWALK SHALL BE RETURNED TO THE CONSTRUCTION SITE BY THE END OF EACH WORKDAY, OR AS NEEDED THROUGHOUT THE WORKDAY, OR AS DIRECTED BY THE LOCAL MUNICIPALITY OR THE CONSERVATION DISTRICT AND DISPOSED AS A MANNER DESCRIBED IN THIS PLAN. IN NO CASE SHALL THE SEDIMENT BE WASHED, SHOVELED OR SWEPT INTO ANY ROAD SIDE DITCH, STORM SEWER OR SURFACE WATER.

16. ALL SEDIMENT REMOVED FROM BMPS SHALL BE DISPOSED OF IN THE MANNER DESCRIBED ON THE PLAN DRAWINGS.

17. AREAS WHICH ARE TO BE TOPSOILED SHALL BE SCARIFIED TO A MINIMUM DEPTH OF 3 TO 5 INCHES -- 6 TO 12 INCHES ON COMPACTED SOILS -- PRIOR TO PLACEMENT OF TOPSOIL. AREAS TO BE VEGETATED SHALL HAVE A MINIMUM 4 INCHES OF TOPSOIL IN PLACE PRIOR TO SEEDING AND MULCHING. FILL OUTSLOPES SHALL HAVE A MINIMUM OF 2 INCHES OF TOPSOIL.

18. ALL FILLS SHALL BE COMPACTED AS REQUIRED TO REDUCE EROSION, SLIPPAGE, SETTLEMENT, SUBSIDENCE OR OTHER RELATED PROBLEMS. FILL INTENDED TO SUPPORT BUILDINGS, STRUCTURES AND CONDUITS, ETC. SHALL BE COMPACTED IN ACCORDANCE WITH LOCAL REQUIREMENTS OR CODES.

19. ALL EARTHEN FILLS SHALL BE PLACED IN COMPACTED LAYERS NOT TO EXCEED 9 INCHES IN THICKNESS.

20. FILL MATERIALS SHALL BE FREE OF FROZEN PARTICLES, BRUSH, ROOTS, SOD, OR OTHER FOREIGN OR OBJECTIONABLE MATERIALS THAT WOULD INTERFERE WITH OR PREVENT CONSTRUCTION OF SATISFACTORY FILLS.

21. FROZEN MATERIALS OR SOFT, MUCKY, OR HIGHLY COMPRESSIBLE MATERIALS SHALL NOT BE INCORPORATED INTO FILLS.

22. FILL SHALL NOT BE PLACED ON SATURATED OR FROZEN SURFACES.
23. SEEPS OR SPRINGS ENCOUNTERED DURING CONSTRUCTION SHALL BE HANDLED IN ACCORDANCE WITH THE STANDARD AND SPECIFICATION FOR SUBSURFACE DRAIN OR OTHER APPROVED METHOD.

24. ALL GRADED AREAS SHALL BE PERMANENTLY STABILIZED IMMEDIATELY UPON REACHING FINISHED GRADE. CUT SLOPES IN COMPETENT BEDROCK AND ROCK FILLS NEED NOT BE VEGETATED. SEEDED AREAS WITHIN 50 FEET OF A SURFACE WATER, OR AS OTHERWISE SHOWN ON THE PLAN DRAWINGS, SHALL BE BLANKETED ACCORDING TO THE STANDARDS OF THIS PLAN.

25. IMMEDIATELY AFTER EARTH DISTURBANCE ACTIVITIES CEASE IN ANY AREA OR SUBAREA OF THE PROJECT, THE OPERATOR SHALL STABILIZE ALL DISTURBED AREAS. DURING NON-GERMINATING MONTHS, MULCH OR PROTECTIVE BLANKETING SHALL BE APPLIED AS DESCRIBED IN THE PLAN. AREAS NOT AT FINISHED GRADE, WHICH WILL BE REACTIVATED WITHIN 1 YEAR, MAY BE STABILIZED IN ACCORDANCE WITH THE TEMPORARY STABILIZATION SPECIFICATIONS. THOSE AREAS WHICH WILL NOT BE REACTIVATED WITHIN 1 YEAR SHALL BE STABILIZED IN ACCORDANCE WITH THE PERMANENT STABILIZATION SPECIFICATIONS.

26. PERMANENT STABILIZATION IS DEFINED AS A MINIMUM UNIFORM, PERENNIAL 70% VEGETATIVE COVER OR OTHER PERMANENT NON-VEGETATIVE COVER WITH A DENSITY SUFFICIENT TO RESIST ACCELERATED EROSION. CUT AND FILL SLOPES SHALL BE CAPABLE OF RESISTING FAILURE DUE TO SLUMPING, SLIDING, OR OTHER MOVEMENTS.

27. E&S BMPS SHALL REMAIN FUNCTIONAL AS SUCH UNTIL ALL AREAS TRIBUTARY TO THEM ARE PERMANENTLY STABILIZED OR UNTIL THEY ARE REPLACED BY ANOTHER BMP APPROVED BY THE LOCAL CONSERVATION DISTRICT OR THE DEPARTMENT.

28. FAILURE TO CORRECTLY INSTALL E&S BMPS, FAILURE TO PREVENT SEDIMENT-LADEN RUNOFF FROM LEAVING THE CONSTRUCTION SITE, OR FAILURE TO TAKE IMMEDIATE CORRECTIVE ACTION TO RESOLVE FAILURE OF E&S BMPS MAY RESULT IN ADMINISTRATIVE, CIVIL, AND/OR CRIMINAL PENALTIES BEING INSTITUTED BY THE DEPARTMENT AS DEFINED IN SECTION 602 OF THE PENNSYLVANIA CLEAN STREAMS LAW. THE CLEAN STREAMS LAW PROVIDES FOR UP TO $10,000 PER DAY IN CIVIL PENALTIES, UP TO $10,000 IN SUMMARY CRIMINAL PENALTIES, AND UP TO $25,000 IN MISDEMEANOR CRIMINAL PENALTIES FOR EACH VIOLATION.

29. CONCRETE WASH WATER SHALL BE HANDLED PER CHAPTER 3 OF THE PA DEP EROSION AND SEDIMENT CONTROL POLLUTION CONTROL MANUAL. IN NO CASE SHALL IT BE ALLOWED TO ENTER ANY SURFACE WATER OR GROUNDWATER SYSTEMS.

30. ANY DAMAGE THAT OCCURS IN WHOLE OR PART AS A RESULT OF BASIN OR TRAP DISCHARGE SHALL BE IMMEDIATELY REPAIRED BY THE PERMITTEE IN A PERMANENT MANNER SATISFACTORY TO THE MUNICIPALITY, LOCAL CONSERVATION DISTRICT, AND THE OWNER OF THE DAMAGED PROPERTY.

31. UPON COMPLETION OF ALL EARTH DISTURBANCE ACTIVITIES AND PERMANENT STABILIZATION OF ALL DISTURBED AREAS, THE OWNER AND/OR OPERATOR SHALL CONTACT THE LOCAL CONSERVATION DISTRICT FOR AN INSPECTION PRIOR TO REMOVAL/CONVERSION OF THE E&S BMPS.

32. AFTER FINAL SITE STABILIZATION HAS BEEN ACHIEVED, TEMPORARY EROSION AND SEDIMENT BMPS MUST BE REMOVED OR CONVERTED TO PERMANENT POST CONSTRUCTION STORM WATER MANAGEMENT BMPS. AREAS DISTURBED DURING REMOVAL OR CONVERSION OF THE BMPS SHALL BE STABILIZED IMMEDIATELY. IN ORDER TO ENSURE RAPID REVEGETATION OF DISTURBED AREAS, SUCH REMOVAL/CONVERSIONS ARE TO BE DONE ONLY DURING THE GERMINATING SEASON.

33. UPON COMPLETION OF ALL EARTH DISTURBANCE ACTIVITIES AND PERMANENT STABILIZATION OF ALL DISTURBED AREAS, THE OWNER AND/OR OPERATOR SHALL CONTACT THE LOCAL CONSERVATION DISTRICT TO SCHEDULE A FINAL INSPECTION.

34. WASTE MATERIALS, SCRAP OR EXCESS CONSTRUCTION MATERIALS SHALL BE COLLECTED, STORED, AND DISPOSED OF IN ACCORDANCE WITH THE SOLID WASTE MANAGEMENT ACT (35 P.S. §§ 6018.101-6018.1003), THE MUNICIPAL WASTE PLANNING, RECYCLING AND WASTE REDUCTION ACT (53 P.S. §§ 4000.101-4000.1904), THE CLEAN STREAMS LAW (35 P.S. §§ 691.1-691.1001) AND RELATED RULES AND REGULATIONS. (TITLE 25, CHAPTER 105, SECTION 46a).

35. WETLAND BOUNDARIES WITH ACTIVE WORK AREAS WILL BE CLEARLY MARKED/FLAGGED PRIOR TO THE COMMENCEMENT OF EARTH DISTURBANCE ACTIVITIES.

36. SUBSOIL EXCAVATED AS PART OF THE PROJECT AND SEDIMENT REMOVED FROM E&S BMPS WILL BE COMBINED AND USED TO BACKFILL THE TRENCH. TYPICALLY, EXCESS SOIL IS MINIMAL AND WILL EITHER BE USED TO CREATE A CROWN OVER THE TRENCH TO COUNTERACT SETTLING OR WILL BE SPREAD EVENLY ACROSS THE RIGHT-OF-WAY (R.O.W.). WHICH WILL HAVE A NEGLIGIBLE EFFECT ON THE OVERALL GRADE. ALSO, ANY EXCESS EXCAVATED MATERIALS OR MATERIALS UNSUITABLE FOR BACKFILL WILL BE DISPOSED OF IN ACCORDANCE WITH THE APPLICABLE REGULATIONS.

37. IT IS ACCEPTABLE FOR AN E&S BMP TO BE TEMPORARILY REMOVED FROM AN EQUIPMENT CROSSING PATHWAY DURING PERIODS OF ACTIVE CONSTRUCTION. ANY E&S BMP THAT IS TEMPORARILY REMOVED MUST BE PROPERLY REINSTALLED PRIOR TO THE END OF EACH WORK DAY.

38. TEMPORARY CROSSINGS WILL BE PERMANENTLY REMOVED FROM WETLANDS AFTER SITE RESTORATION.

39. TIMBER MAT WIDTHS AT TEMPORARY CROSSINGS MUST BE SUFFICIENT TO SUPPORT CONTRACTOR EQUIPMENT AND/OR AS APPROVED BY THE ENVIRONMENTAL INSPECTOR (EI). LENGTH OF TEMPORARY CROSSING IS DEPENDENT ON THE WETLAND CROSSING LENGTH FROM START TO END.

40. A GENERAL EROSION AND SEDIMENT CONTROL CONSTRUCTION SEQUENCE FOR EARTH DISTURBING ACTIVITIES ASSOCIATED WITH CONSTRUCTION HAS BEEN DEVELOPED AND INCLUDED IN THE PLAN DRAWINGS. IT SHOULD BE NOTED THAT CONSTRUCTION ACTIVITIES MAY OCCUR SIMULTANEOUSLY; HOWEVER, DEVIATION FROM THE SEQUENCE MUST BE APPROVED BY THE LOCAL CONSERVATION DISTRICT AND/OR REGIONAL OFFICE OF THE DEP PRIOR TO IMPLEMENTATION.

41. CLEARING, GRUBBING, AND TOPSOIL STRIPPING SHALL BE LIMITED TO THOSE AREAS DESCRIBED IN EACH STAGE OF THE CONSTRUCTION SEQUENCE. GENERAL SITE GRUBBING AND TOPSOIL STRIPPING MAY NOT COMMENCE IN ANY STAGE OR PHASE OF THE PROJECT UNTIL THE E&S BMPS SPECIFIED BY THE CONSTRUCTION SEQUENCE FOR THAT STAGE OR PHASE HAVE BEEN INSTALLED AND ARE FUNCTIONING AS DESCRIBED IN THIS E&S PLAN.

42. SEEPS OR SPRINGS ENCOUNTERED DURING CONSTRUCTION SHALL BE HANDLED IN THE FOLLOWING MANNER: THE ENVIRONMENTAL INSPECTOR (EI) WILL WORK WITH THE CONTRACTOR TO MOVE THE WATER FROM THE SPRING/SEEP TO A VEGETATED AREA OF THE R.O.W. AN ENERGY DISSIPATION DEVICE WILL BE INSTALLED TO ENSURE THE FLOW DOES NOT CREATE R.O.W. EROSION. IN THE EVENT THE SURROUNDING VEGETATION IS NOT SUFFICIENT TO MANAGE THE FLOW WITHOUT CREATING AN EROSION SITUATION, THE ENVIRONMENTAL INSPECTOR (EI) WILL COORDINATE WITH THE CONTRACTOR, AND THE LOCAL CONSERVATION DISTRICT AND/OR REGIONAL OFFICE OF THE DEP TO PREVENT EROSION AND SEDIMENTATION. IF THE SPRING/SEEP DISCHARGE MUST TRAVERSE THE R.O.W., THEN CULVERTS, TIMBER MATS, OR FRENCH DRAINS WILL BE INSTALLED TO CARRY THE WATER ACROSS THE R.O.W. TO PREVENT EROSION, WHILE AT THE SAME TIME ALLOWING CONSTRUCTION IN THE AREA TO CONTINUE. ADDITIONAL BMPS WILL BE INSTALLED AROUND THE SPRING/SEEP TO PROTECT BOTH THE ON R.O.W. AND OFF R.O.W. AREAS FROM EROSION AND SEDIMENTATION. THE EI MAY REQUIRE THE CONTRACTOR TO INSTALL TIMBER MATS AT SPRING/SEEP AREAS (NON WETLANDS) TO MINIMIZE IMPACTS TO THE R.O.W. DURING SITE RESTORATION OF THE R.O.W., THE SPRING/SEEP PATH WILL BE RESTORED TO THE EXTENT POSSIBLE TO PREVENT EROSION AND SEDIMENTATION ON/OFF THE R.O.W., AND APPROPRIATE PERMANENT BMPS WILL BE INSTALLED.

43. ALL EXISTING ROADWAY DITCH AND STREAM CHANNELS SHALL BE KEPT FREE OF OBSTRUCTIONS INCLUDING BUT NOT LIMITED TO FILL ROCKS, ACCUMULATED SEDIMENT, AND CONSTRUCTION MATERIAL/WASTES.

44. UNDERGROUND UTILITIES CUTTING THROUGH ANY ACTIVE ROADWAY DITCH OR STREAM CHANNEL SHALL BE IMMEDIATELY BACKFILLED AND THE CHANNEL RESTORED TO ITS ORIGINAL CROSS-SECTION AND PROTECTIVE LINING. ANY BASE FLOW WITHIN THE CHANNEL SHALL BE CONVEYED PAST THE WORK AREA IN THE MANNER DESCRIBED IN THIS PLAN UNTIL SUCH RESTORATION IS COMPLETE.

45. EROSION CONTROL BLANKETING SHALL BE IN STALLED ON ALL SLOPES 3H: 1V OR STEEPER. WITHIN 100 FEET OF A SURFACE WATER, AND ON ALL OTHER DISTURBED AREAS SPECIFIED ON THE PLAN MAPS AND/OR DETAIL SHEETS. TIMBER MATS IN WETLANDS WILL BE CLEANED IN SUCH A MANNER AS TO MINIMIZE (PREVENT) THE INTRODUCTION OF UPLAND SOILS INTO THE WETLAND.

46. STREET SWEEPING: REASONABLE METHODS WHICH ARE SANCTIONED BY THE DEP AS ALTERNATIVES TO INSTALLATION OF TIRE WASH STATIONS ON PUBLIC ROAD ACCESS POINTS FOR GATHERING PIPELINE PROJECTS IN HQ/EV OR SILTATION IMPAIRED WATERSHEDS INCLUDE:

- USE OF A VACUUM TRUCK SWEEPER OR SWEEPER WITH A CATCH BIN ATTACHMENT FOR PAVED SURFACE PUBLIC ROADS;
- FOR DIRT OR GRAVEL SURFACE PUBLIC ROADS, RIGOROUS MANUAL REMOVAL OF MUD/DIRT FROM VEHICLE/EQUIPMENT TIRES PRIOR TO EXITING CONSTRUCTION SITE; SUPPLEMENTED BY IMMEDIATE REMOVAL, BY MANUAL MEANS, OF SOIL WHICH MAY BECOME DISCHARGED ONTO PUBLIC ROADWAYS. DUST CONTROL AND/OR COMPACTION VIA ROLLING OF THE DIRT PUBLIC ROAD SURFACE WILL BE IMPLEMENTED AS NEEDED.

FREQUENCY OF MECHANICAL AND/OR MANUAL CONTROLS WILL BE DEPENDENT UPON CONSTRUCTION TRAFFIC INTENSITY. WEATHER CONDITIONS, AND SOIL MOISTURE CONDITIONS. AT A MINIMUM FOR PAVED ROADS, ANY DAY IN WHICH CONSTRUCTION TRAFFIC IS EXITING THE ROCK CONSTRUCTION ENTRANCE THE VACUUM TRUCK SWEEPER OR SWEEPER WITH A CATCH BIN ATTACHMENT SHALL CLEAN THE ROADWAY AT THE END OF THE WORK DAY AND PRIOR TO ANY FORECASTED RAIN EVENT. THE REQUIREMENT IS TO NOT INTRODUCE SEDIMENT LOAD FROM CONSTRUCTION TRAFFIC ONTO PUBLIC ROAD SURFACES AND INTO ROAD DITCHES WHICH WILL FLOW INTO THE HQ/EV OR SILTATION IMPAIRED WATER RESOURCES THAT ARE THE SUBJECT OF THE INCREASED PROTECTION.

SITE STABILIZATION SCHEDULE

TEMPORARY SEEDING

EXCLUDING AREAS OF ACTIVE CONSTRUCTION, TEMPORARY VEGETATIVE COVER SHALL BE ESTABLISHED IN DISTURBED AREAS WHERE THE SOIL WILL BE EXPOSED FOR A PERIOD GREATER THAN FOUR (4) DAYS. SEED MIXTURE FOR TEMPORARY VEGETATION SHALL CONSIST OF 100% ANNUAL RYEGRASS. SEED SHALL BE APPLIED AT THE RATE OF 40 LB/ACRE OR AS RECOMMENDED BY A LOCAL RECOGNIZED SEED SUPPLIER AS APPROVED BY THE OWNER. PRIOR TO SEEDING, APPLY 1 TON OF AGRICULTURAL GRADE LIMESTONE PER ACRE PLUS 10-10-10 FERTILIZER AT THE RATE OF 500 LB/ACRE (UNLESS APPLICATION RATES HAVE BEEN DETERMINED OTHERWISE BY FIELD PH TESTING) AND WORK INTO SOIL.

CONFIDENTIAL
THESE DESIGNS AND DRAWINGS ARE CONFIDENTIAL & ARE THE EXCLUSIVE PROPERTY OF: NV5, INC., PHILADELPHIA, PENNSYLVANIA. NO COPY OR REPRODUCTION MAY BE MADE WITHOUT WRITTEN APPROVAL.

ADELPHIA GATEWAY

COMMONWEALTH OF PENNSYLVANIA
REGISTERED PROFESSIONAL
MICHAEL JAMES CONNOR
ENGINEER
No. 078570-E

DATE: 10/25/18

REV	DESCRIPTION	CHK	DATE	APP	DATE

REVISION

DRAWN BY	DB	10/25/18
DESIGNED BY	ML	10/25/18
CHECKED BY	MC	10/25/18
APPROVED BY	RH	
NV5 JOB NO.	27317-0000050	
PLOT SCALE		
MODEL ID		

NV5, Inc.
1315 Walnut Street, Suite 900
Philadelphia, PA 19107
T: 215-751-1133

EROSION & SEDIMENT CONTROL PLAN
GENERAL NOTES
SHEET 1 OF 4

SCALE	DRAWING NUMBER	REV
N/A	ES-2	

10/25/2018 1:11 PM

PERMANENT SEEDING

SITE PREPARATION AND ESTABLISHMENT OF PERMANENT VEGETATION SHALL BE CONDUCTED AS FOLLOWS:

1. INSTALL ANY NECESSARY SURFACE WATER CONTROL MEASURES.

2. IN LOCATIONS WHERE WOOD MATS ARE REMOVED, AERATE THE SOIL TO DECOMPACT TOP 6" OF GROUND. IF EXISTING VEGETATION HAS BEEN KILLED DUE TO MATTING, SCARIFY AND SEED ACCORDING TO STEPS BELOW.

3. GRADED AREAS SHOULD BE SCARIFIED OR OTHERWISE LOOSENED TO A DEPTH OF 3-5 INCHES TO PERMIT BONDING OF TOPSOIL. DISTRIBUTE TOPSOIL THROUGHOUT DISTURBED AREAS TO A DEPTH OF 4-6 INCHES. SPREADING SHOULD BE DONE IN SUCH A MANNER THAT SODDING OR SEEDING CAN PROCEED WITH MINIMUM TILLAGE.

4. HYDROSEED OR FOLLOW STEPS 3 THROUGH 6 BELOW.

5. PERFORM AGRICULTURAL OPERATIONS AT RIGHT ANGLES TO SLOPES.

6. AGRICULTURAL LIME APPLICATION RATES CAN BE DETERMINED BY FIELD PH TESTING.TESTING MAY BE PERFORMED AT A RATE OF 1 TEST PER ACRE (MIN.). IN THE ABSENCE OF TESTING, APPLY AT 6 TONS/ACRE.

7. APPLY DRY 10-20-20 FORMULATION OF FERTILIZER AT THE RATE OF 1,000 LB/ACRE OR AT A RATE DETERMINED BY FIELD TESTING.

8. WORK LIME AND FERTILIZER INTO THE SOIL TO A DEPTH OF 4 INCHES USING APPROPRIATE EQUIPMENT.

9. SEED MIXTURE - SEE LINE LIST FOR LANDOWNER REQUIREMENT AND PROJECT RESTORATION PLAN. IN ABSENCE OF A SPECIFIED MIXTURE, SEED MIXTURE SHALL BE IN ACCORDANCE WITH THE SEEDING TABLE PROVIDED; OR IN ACCORDANCE WITH TABLE 11.4 AND TABLE 11.5 OF THE DEP EROSION AND SEDIMENT POLLUTION CONTROL PROGRAM MANUAL (TECHNICAL GUIDANCE NO. 363-2134-008) AS APPROVED BY THE OWNER.

10. IF NOT HYDROSEEDING. APPLY MULCH.

MULCHING

THE PURPOSE OF MULCH IS TO REDUCE RUNOFF AND EROSION, PREVENT SURFACE COMPACTION OR CRUSTING, CONSERVE MOISTURE, AID IN ESTABLISHING PLANT COVER, AND CONTROL WEEDS. MULCH SHALL BE APPLIED ON ANY AREA SUBJECT TO EROSION, OR WHICH HAS UNFAVORABLE CONDITIONS FOR PLANT ESTABLISHMENT AND GROWTH. THE PRACTICE MAY BE USED ALONE OR IN CONJUNCTION WITH OTHER STRUCTURAL AND VEGETATIVE CONSERVATION PRACTICES, SUCH AS WATERWAYS, PONDS, SEDIMENTATION TRAPS OR CRITICAL AREA PLANTING. ON SEDIMENT PRODUCING AREAS WHERE THE PERIOD OF EXPOSURE IS GREATER THAN FOUR (4) MONTHS, MULCH MATERIALS SHALL BE APPLIED ACCORDING TO THE FOLLOWING GUIDELINES:

1. STRAW MULCH SHALL BE APPLIED AT THE RATE OF THREE (3) TONS PER ACRE. CHEMICALLY TREATED OR SALTED STRAW IS NOT ACCEPTABLE AS MULCH.

2. STRAW MULCH SHALL BE ANCHORED IMMEDIATELY AFTER APPLICATION BY AT LEAST ONE OF THE FOLLOWING METHODS.

A. CRIMPED INTO THE SOIL USING TRACTOR DRAWN EQUIPMENT (STRAIGHT BLADED COULTER OR SIMILAR). THIS METHOD IS LIMITED TO SLOPES NO STEEPER THAN 3:1. MACHINERY SHOULD BE OPERATED ON THE CONTOUR. (CRIMPING OF HAY OR STRAW BY RUNNING IT OVER WITH TRACKED MACHINERY IS NOT RECOMMENDED)

B. ASPHALT, EITHER EMULSIFIED OR CUT-BACK, CONTAINING NO SOLVENTS OR OTHER DILUTING AGENTS TOXIC TO PLANT OR ANIMAL LIFE, UNIFORMLY APPLIED AT THE RATE OF 31 GALLONS PER 1000 SQ. FT.

C. SYNTHETIC BINDERS (CHEMICAL BINDERS) MAY BE USED AS RECOMMENDED BY THE MANUFACTURER TO ANCHOR MULCH PROVIDED SUFFICIENT DOCUMENTATION IS PROVIDED TO SHOW THAT IT IS NON-TOXIC TO NATIVE PLANT AND ANIMAL SPECIES.

D. LIGHTWEIGHT PLASTIC, FIBER, OR PAPER NETS MAY BE STAPLED OVER THE MULCH ACCORDING TO THE MANUFACTURER'S RECOMMENDATIONS.

MULCHED AREAS SHALL BE CHECKED PERIODICALLY AND AFTER EACH RUNOFF EVENT (E.G. RAIN, SNOWMELT, ETC.) FOR DAMAGE UNTIL THE DESIRED PURPOSE OF THE MULCHING IS ACHIEVED). DAMAGED PORTIONS Of THE MULCH OR TIE-DOWN MATERIAL SHALL BE REPAIRED UPON DISCOVERY.

PERMANENT SEEDING TABLE (NON-LAWN AREAS)

SCIENTIFIC NAME	COMMON NAME	REQUIRED VARIETIES	MINIMUM PURITY (%)	MINIMUM GERMINATION (%)	SEED RATE (LB/1000 SF)	SEEDING RATE (LB/ACRE)
LOLIUM PERENNE	PERENNIAL RYEGRASS	A MIXTURE OF AT LEAST 2 FINE-LEAF, TURF-TYPE VARIETIES ADAPTED TO LOCAL CONDITIONS	98	90	0.8	35
FESTUCA RUBRA	RED FESCUE	"PENNLAWN"	98	85	0.8	35
LOTUS CORNICULATUS	BIRDSFOOT TREFOIL (BIRDSFOOT DEER-VETCH)	"VIKING", "EMPIRE", "LEO", OR "NORCEN" (PLUS 5X LEGUME INOCULATION RATE)	98	80	0.7	30

PLUS, DEPENDING ON THE SEASON AND AVAILABILITY, ALSO ADD ONE OF THE FOLLOWING "NURSE CROP" SPECIES:						
AVENA SATIVA	OATS APRIL 1 TO SEPT 1	COMMON SEED	98	85	0.7	32
SECALE CEREALE	WINTER RYE APRIL 1 TO OCTOBER 1	"AROOSTOCK"** OR COMMON SEED	98	85	1.3	56
SECALE CEREALE	WINTER RYE OCTOBER 1 TO APRIL 1	"AROOSTOCK"** OR COMMON SEED	98	85	2.6	112
				TOTAL:	3 TO 5	132 TO 212

* IF THE ABOVE SEEDING DATES CANNOT BE OBSERVED, USE ONE OF THE APPROPRIATE TEMPORARY SEEDING MIXTURE SPECIES IDENTIFIED IN TABLE 11.4 OF THE PADEP E&S MANUAL.

** "AROOSTOOK" VARIETY OF WINTER RYE IS RECOMMENDED FOR LATE SEEDING WHERE WINTERS ARE COLD.

IN WETLAND AREAS, EXCAVATED TOPSOIL WITH THE VEGETATIVE ROOT MASS SHALL BE CAREFULLY REMOVED AND STOCKPILED SEPARATELY FROM THE SUBSOIL. LIME AND FERTILIZER ARE NOT TO BE APPLIED TO THE BACKFILL TRENCH. ANNUAL RYEGRASS MAY BE APPLIED AT THE RATE OF 40 LB/ACRE WHERE NEEDED TO AREAS WITHOUT STANDING WATER IF TEMPORARY STABILIZATION IS REQUIRED; OTHERWISE, THE WETLAND AREAS WILL BE PERMANENTLY SEEDED IN ACCORDANCE WITH THE PROJECT RESTORATION PLAN. STRAW MULCH SHOULD BE APPLIED AT THE RATE OF 3 TONS/ACRE AND WITHOUT BINDING AGENTS.

PERMANENT SEEDING TABLE (LAWN AREAS)

SCIENTIFIC NAME	COMMON NAME	REQUIRED VARIETIES	MINIMUM PURITY (%)	MINIMUM GERMINATION (%)	SEED RATE (LB/1000 SF)	SEEDING RATE (LB/ACRE)
LOLIUM PERENNE	PYRENNIAL RYEGRASS	A MIXTURE OF AT LEAST 2 FINE-LEAF, TURF-TYPE VARIETIES ADAPTED TO LOCAL CONDITIONS	98	90	0.9	42
FESTUCA RUBRA	RED FESCUE	"PENNLAWN"	98	85	1.4	65
POA PRATENSIS	KENTUCKY BLUEGRASS MIXTURE	A COMBINATION OF IMPROVED CERTIFIED VARIETIES WITH NO ONE VARIETY EXCEEDING 50% OF THE TOTAL BLUEGRASS COMPONENT	97	80	2.3	107
				TOTAL:	4.6	214

GENERAL EROSION AND SEDIMENTATION CONTROL CONSTRUCTION SEQUENCE

GENERAL E&S CONSTRUCTION SEQUENCE NOTES

1. A GENERAL E&S CONSTRUCTION SEQUENCE FOR EARTH DISTURBING ACTIVITIES ASSOCIATED WITH CONSTRUCTION OF A PIPELINE MODIFICATION HAS BEEN DEVELOPED AND INCLUDED IN THE PLAN SET. IT SHOULD BE NOTED THAT CONSTRUCTION ACTIVITIES MAY OCCUR SIMULTANEOUSLY; HOWEVER, DEVIATIONS FROM THE SEQUENCE MUST BE APPROVED BY THE LOCAL CONSERVATION DISTRICT AND/OR REGIONAL OFFICE OF THE PENNSYLVANIA DEPARTMENT OF' ENVIRONMENTAL PROTECTION (DEP).

2. E&S BMP DETAILS AND CONSTRUCTION SPECIFICATIONS CAN BE FOUND ON THE TYPICAL DETAILS PROVIDED ON THE DETAIL DRAWING SHEETS.

3. ADDITIONAL INFORMATION ON WATERBODY AND WETLAND CROSSING METHODS ARE ALSO DESCRIBED IN THE "WETLAND CROSSING CONSTRUCTION SEQUENCE AND GENERAL NOTES"

4. THE OWNER WILL ASSIGN AN ENVIRONMENTAL INSPECTOR (EI) TO THE PROJECT. THE ROLE OF THE ENVIRONMENTAL INSPECTOR (EI) WILL BE TO ENSURE COMPLIANCE WITH THE MITIGATION AND CONSTRUCTION PROCEDURES IDENTIFIED IN THE FERC APPLICATION; FEDERAL, STATE, AND LOCAL PERMITS ISSUED FOR THE PROJECT; AND SITE SPECIFIC CONSTRUCTION PLANS. THE EI WILL BE REQUIRED TO ADHERE TO THE SITE SPECIFIC CONSTRUCTION PLANS AND THE E&S PLAN, INCLUDING NOTES, DESCRIBED HEREIN.

E&S CONSTRUCTION SEQUENCE

1. AT LEAST SEVEN (7) DAYS PRIOR TO STARTING ANY EARTH DISTURBANCE ACTIVITIES, INCLUDING CLEARING AND GRUBBING, THE OWNER AND/OR CONTRACTOR SHALL NOTIFY A REPRESENTATIVE FROM THE RESPECTIVE LOCAL CONSERVATION DISTRICTS AND REGIONAL OFFICE OF THE PADEP.

2. A COPY OF THE APPROVED E&S PLAN MUST BE AVAILABLE AT THE PROJECT SITE AT ALL TIMES.

3. AT LEAST THREE (3) DAYS PRIOR TO STARTING ANY EARTH DISTURBANCE ACTIVITIES, THE CONTRACTOR SHALL NOTIFY PENNSYLVANIA ONE CALL SYSTEM, INC. AT 1-800-242-1776.

4. MAKE ALL PROPER NOTIFICATION REQUIREMENTS TO LOCAL STATE, OR FEDERAL AGENCIES PRIOR TO THE START OF CONSTRUCTION ACTIVITIES OR PRIOR TO SPECIFIC CONSTRUCTION ACTIVITIES, AS APPROPRIATE.

5. PRIOR TO COMMENCEMENT OF ANY EARTH DISTURBANCE ACTIVITY INCLUDING CLEARING AND GRUBBING, CLEARLY DELINEATE SENSITIVE AREAS INCLUDING WATERBODIES/WETLANDS, RIPARIAN FOREST BUFFER BOUNDARIES (IF ANY), THE 50-FOOT VEGETATIVE BUFFER AT HQ WATERBODIES, THE LIMITS OF CLEARING, PIPELINE CENTERLINE WITHIN THE LIMITS OF DISTURBANCE, KNOWN CROSSINGS OF FOREIGN LINES AND UTILITIES, CONSTRUCTION ENTRANCES, TREES THAT ARE TO BE CONSERVED WITHIN THE PROJECT AREA, CULTURAL RESOURCE SITES, AND RARE SPECIES HABITAT, AS APPLICABLE. AVOIDANCE AREAS WILL BE MARKED WITH APPROPRIATE FENCING, SIGNAGE, AND/OR FLAGGING BASED ON ENVIRONMENTAL SURVEYS, LANDOWNER REQUIREMENTS, AND PERMIT CONDITIONS.

6. INSTALL STABILIZED ROCK CONSTRUCTION ENTRANCES WHERE VEHICLES WILL ENTER CONSTRUCTION AREAS FROM PUBLIC ROADS AT THE DIRECTION OF THE ENVIRONMENTAL INSPECTOR (EI) BASED ON SITE CONDITIONS AND CLEARING ACCESS NEEDS.

7. PERFORM ALL OTHER NECESSARY IMPROVEMENTS TO ACCESS ROADS WHERE NECESSARY INCLUDING, BUT NOT LIMITED TO MINIMAL GRADING, ADDING STONE, AND PROTECTION OF EXISTING CULVERTS.

8. INSTALL COMPOST FILTER SOCK, SEDIMENT BARRIERS, OR OTHER COUNTY CONSERVATION DISTRICT APPROVED SEDIMENT BARRIERS/BMPS PRIOR TO CLEARING AN AREA.

9. IMPLEMENT INITIAL LAND CLEARING ALONG PIPELINE IN ACCORDANCE WITH STREAM/WETLAND CONSTRUCTION SEQUENCES OUTLINED BELOW. LAND CLEARING WILL BE CONCURRENT WITH STEP #10.

10. INSTALL BMPS FOR TEMPORARY EQUIPMENT CROSSINGS OF WETLANDS AND WATERBODIES, AS NECESSARY. THE SPECIFIC TYPE OF TEMPORARY EQUIPMENT STREAM CROSSING IS IDENTIFIED ON THE SITE SPECIFIC DRAWINGS BUT CAN BE ALTERED BASED ON FIELD CONDITIONS. FOR WETLAND CROSSINGS, INSTALL WETLAND/TIMBER MATS PER TYPICAL DETAILS TO PROVIDE A TRAVEL LANE. THE PLACEMENT OF COMPOST FILTER SOCK MAY NEED TO BE TEMPORARILY ADJUSTED DUE TO THE TEMPORARY EQUIPMENT CROSSING. SEE THE "STREAM CROSSING CONSTRUCTION SEQUENCE AND GENERAL NOTES" AND "WETLAND CROSSING CONSTRUCTION SEQUENCE AND GENERAL NOTES."

11. IMPLEMENT INITIAL LAND GRUBBING AND, WHERE NECESSARY, GRADING. TREES WILL NOT BE REMOVED/GRUBBED WITHIN 50 FEET OF STREAMS UNTIL CONSTRUCTION THROUGH THAT AREA.

12. IF TRENCH EXCAVATION CANNOT COMMENCE WITHIN FOUR (4) DAYS OF INITIAL LAND GRUBBING, TEMPORARY STABILIZATION MEASURES WILL BE IMPLEMENTED IMMEDIATELY.

13. COMMENCE TRENCH EXCAVATION. IF TRENCH EXCAVATION TAKES PLACE IN AN AGRICULTURAL WETLAND, OR RESIDENTIAL AREA, THEN SEGREGATION OF TOPSOIL AND SUBSOIL WILL BE PERFORMED. INSTALL STREAM CROSSINGS AND WETLAND AS THEY ARE ENCOUNTERED. IMMEDIATELY AFTER COMPLETION OF THE STREAM CROSSING, STABILIZE DISTURBED STREAM BANKS.

14. IF WATER IS ENCOUNTERED DURING EXCAVATION, INSTALL A PUMPED WATER FILTER BAG AND COMPOST FILTER SOCKS IN PREPARATION OF DEWATERING ACTIVITIES. THE LOCATION OF THE DEWATERING DEVICE AND/OR STRUCTURE AND SECONDARY STRUCTURES WILL BE AS SHOWN ON DRAWINGS OR AS DETERMINED BY THE EI BASED UPON ACTUAL FIELD CONDITIONS. EFFORTS WILL BE MADE TO PLACE THE DEWATERING FILTERS INTO A WELL-VEGETATED UPLAND AREA GREATER THAN 50 FEET FROM ANY WETLAND OR WATERBODY; THESE AREAS WILL NOT BE CLEARED OR GRUBBED. THE ENVIRONMENTAL INSPECTOR (EI) WILL MONITOR TRENCHES HOLDING WATER AND BEGIN DEWATERING ACTIVITIES AS NEEDED SO THAT SEDIMENT LADEN WATER IS NOT DISCHARGED DIRECTLY FROM THE EXCAVATED TRENCH TO RESOURCES. THE EI WILL MONITOR WEATHER REPORTS, ADVISE THE CONTRACTOR IN INSTANCES WHERE PRECIPITATION EVENTS MAY CAUSE EXCESSIVE TRENCH WATER, AND COORDINATE CREWS AS APPROPRIATE TO HANDLE TRENCH WATER.

15. BACKFILL TRENCH WITH SUITABLE EXCAVATED MATERIAL IN AREAS WHERE TOPSOIL HAS BEEN SEGREGATED, THE SUBSOIL WILL BE REPLACED FIRST, AND THE TOPSOIL WILL BE SPREAD OVER THE AREA FROM WHICH IT WAS REMOVED. FINAL GRADES SHALL BE AS CLOSE AS PRACTICABLE TO THE PRE-CONSTRUCTION CONTOURS, UNLESS PROPOSED CONTOURS ARE SHOWN ON THE PLAN.

16. AFTER FINAL GRADE IS ESTABLISHED, INSTALL/IMPLEMENT APPROPRIATE BMPS TO ALL DISTURBED AREAS INCLUDING, BUT NOT LIMITED TO: SURFACE ROUGHNING/SCARIFICATION, PERMANENT SEEDING, AND MULCHING. SEED AND SOIL AMENDMENTS SHALL BE APPLIED AS DEFINED WITHIN THIS PLAN. WHERE REQUIRED AND AFTER SEEDING AND SOIL AMENDMENTS, INSTALL EROSION CONTROL BLANKET/FABRIC. EROSION CONTROL BLANKET/FABRIC SHALL BE APPLIED WITHIN 100 FEET OF STREAM BANKS IN HQ WATERSHEDS (UNLESS LOCATED WITHIN A WETLAND) AND ON SLOPES WHICH ARE 3H:1V OR STEEPER, AS DEPICTED ON THE PLANS. REMOVE TEMPORARY CROSSINGS OF STREAMS AND WETLANDS ONCE EQUIPMENT ACCESS ACROSS ASSOCIATED FEATURE IS NO LONGER NECESSARY.

17. IF FINAL GRADING CANNOT BE COMPLETED WITHIN TEN (10) DAYS OF BACKFILL AND PERMANENT SEEDING WITHIN FOUR (4) DAYS OF FINAL GRADING, TEMPORARY STABILIZATION MEASURES WILL BE IMPLEMENTED IMMEDIATELY.

18. THE OWNER WILL CONTINUE TO CONDUCT INSPECTIONS UNTIL THE PROJECT AREA HAS REACHED PERMANENT STABILIZATION. PERMANENT STABILIZATION IS DEFINED AS A MINIMUM UNIFORM PERENNIAL 70% VEGETATIVE COVER OR OTHER NON-VEGETATIVE COVER WITH A DENSITY SUFFICIENT TO RESIST ACCELERATED EROSION. CUT AND FILL SLOPES SHALL BE CAPABLE OF RESISTING FAILURE DUE TO SLUMPING, SLIDING, OR OTHER MOVEMENTS. TEMPORARY E&S BMPS MAY BE REMOVED AFTER THE ENTIRE DISTURBED AREA TRIBUTARY TO EACH BMP REACHES PERMANENT STABILIZATION. REMOVE ALL REMAINING TEMPORARY CROSSINGS OF STREAMS AND WETLANDS. IMMEDIATELY STABILIZE ANY DISTURBANCES ASSOCIATED WITH THE REMOVAL OF THE BMPS.

19. THE LENGTH OF TIME TO START, COMPLETE, AND STABILIZE BLOWDOWN AND MAIN LINE VALVE SITES SHOULD NOT EXCEED 30 DAYS

CONFIDENTIAL
THESE DESIGNS AND DRAWINGS ARE CONFIDENTIAL & ARE THE EXCLUSIVE PROPERTY OF: NV5, INC., PHILADELPHIA, PENNSYLVANIA. NO COPY OR REPRODUCTION MAY BE MADE WITHOUT WRITTEN APPROVAL.

ADELPHIA GATEWAY

COMMONWEALTH OF PENNSYLVANIA REGISTERED PROFESSIONAL ENGINEER MICHAEL JAMES CONNOR No. 078570-E

DATE: 10/25/18

REV	DESCRIPTION	CHK	DATE	APP	DATE
REVISION					

DRAWN BY	DB	10/25/18
DESIGNED BY	ML	10/25/18
CHECKED BY	MC	10/25/18
APPROVED BY	RH	
NV5 JOB NO.	27317-0000050	
PLOT SCALE		
MODEL ID		

NV5, Inc.
1315 Walnut Street, Suite 900
Philadelphia, PA 19107
T: 215-751-1133

EROSION & SEDIMENT CONTROL PLAN
GENERAL NOTES
SHEET 2 OF 4

SCALE N/A | DRAWING NUMBER ES-3 | REV

10/25/2018 1:15 PM TYLER MIRRA

E&S MAINTENANCE PLAN

THE ENVIRONMENTAL INSPECTOR (EI) WILL BE PRESENT DURING CONSTRUCTION ACTIVITIES TO INSPECT BMPS AT LEAST EVERY SEVEN (7) CALENDAR DAYS FOLLOWING THEIR INSTALLATION AND WITHIN 24 HOURS OF THE END OF A STORMWATER EVENT. A LOG SHOWING DATES THAT E&S BMPS WERE INSPECTED AS WELL AS ANY DEFICIENCIES FOUND AND THE DATE THEY WERE CORRECTED, SHALL BE MAINTAINED ON THE SITE AND BE MADE MORE AVAILABLE TO REGULATORY AGENCY OFFICIALS AT THE TIME OF INSPECTION. BMPS WILL BE MAINTAINED, AS FOLLOWS:

1. REGRADE OR ADD GRAVEL TO THE ACCESS ROAD IF EXCESSIVE RUTTING OR EROSION IS OBSERVED.

2. SEDIMENT SHALL BE REMOVED WHEN ACCUMULATIONS REACH ONE-HALF OF THE ABOVEGROUND EIGHT OF THE BARRIER (I.E. COMPOST FILTER SOCK).

3. SECTION OF SILT BARRIER WHICH HAS BEEN UNDERMINED OR OVERTOPPED MUST BE IMMEDIATELY REPLACED WITH A ROCK FILTER OUTLET.

4. SEDIMENT SHALL BE REMOVED WHEN ACCUMULATIONS REACH ONE-THIRD THE HEIGHT OF THE ROCK FILTER OUTLET.

5. EXISTING CULVERTS ALONG ACCESS ROADS WILL BE CLEARED OUT, REPAIRED, OR REPLACED AS NECESSARY.

6. EARTH DISTURBANCE AREAS WILL BE REPAIRED WHERE SIGNS OF ACCELERATED EROSION ARE DETECTED.

7. PUMPED WATER FILTER BAGS SHALL BE REPLACED WHEN THEY BECOME ONE-HALF FULL.

8. IF NECESSARY, REPLACEMENT OF COMPOST FILTER SOCK SHALL BE AS FOLLOWS: BIODEGRADABLE COMPOST FILTER SOCKS SHALL BE REPLACED AFTER SIX MONTHS IF PERMANENT STABILIZATION HAS NOT BEEN DETERMINED SUCCESSFUL: PHOTODEGRADABLE COMPOST FILTER SOCKS SHALL BE REPLACED AFTER ONE YEAR; POLYPROPYLENE COMPOST FILTER SOCKS SHALL BE REPLACED ACCORDING TO MANUFACTURER'S RECOMMENDATIONS.

9. ALL SEDIMENT DEPOSITED ON PAVED ROADWAYS SHALL BE REMOVED AND RETURNED TO THE CONSTRUCTION SITE IMMEDIATELY. IF EXCESSIVE AMOUNTS OF SEDIMENT ARE BEING DEPOSITED ON ROADWAY, EXTEND LENGTH OF ROCK CONSTRUCTION ENTRANCE BY 50 FEET INCREMENTS UNTIL CONDITION IS ALLEVIATED. WASHING THE ROADWAY OR SWEEPING THE DEPOSITS INTO ROADWAY DITCHES, SEWER, CULVERTS, OR OTHER DRAINAGE WAYS IS NOT ACCEPTABLE.

10. A MINIMUM ROCK THICKNESS OF 8 INCHES SHALL BE MAINTAINED AT THE ROCK CONSTRUCTION ENTRANCE THROUGHOUT CONSTRUCTION. A STOCKPILE SHALL BE MAINTAINED ON THE CONSTRUCTION SITE FOR THIS PURPOSE.

11. IF THE SITE DOES NOT ACHIEVE PERMANENT STABILIZATION WITHIN THE ALLOTTED TIME FRAME FOR THE PROJECT, THEN REMEDIAL ACTION WILL BE TAKEN, SUCH AS RESEEDING. THESE AREAS SHALL BE MONITORED UNTIL PERMANENT STABILIZATION HAS BECOME ESTABLISHED.

12. IMMEDIATELY UPON DISCOVERING UNFORESEEN CIRCUMSTANCES POSING THE POTENTIAL FOR ACCELERATED EROSION AND/OR SEDIMENT POLLUTION, THE OPERATOR/CONTRACTOR SHALL IMPLEMENT APPROPRIATE BMPS TO ELIMINATE THE POTENTIAL FOR ACCELERATED EROSION AND/OR SEDIMENT POLLUTION.

13. SEDIMENT REMOVED FROM BMPS WILL BE REPLACED IN AN UPLAND CONSTRUCTION AREA AND SPREAD OUT. ALL WASTE OR EXCESS MATERIALS NOT SUITABLE FOR THE ON-SITE STOCKPILE SHALL BE DISPOSED OF OFF-SITE AT A PADEP OR LOCAL COUNTY CONSERVATION DISTRICT APPROVED FACILITY. MATERIALS WILL BE RE-USED OR RECYCLED IF POSSIBLE, INCLUDING TOPSOIL AND OTHER MATERIALS AS APPROPRIATE ANY OFF-SITE STOCKPILE/SPOIL PILES SHALL BE AT A PADEP OR LOCAL COUNTY CONSERVATION DISTRICT APPROVED FACILITY WITH AN APPROVED E&S PLAN. THE CONTRACTOR WILL BE RESPONSIBLE FOR VERIFYING THAT AN OFF-SITE FACILITY HAS APPROPRIATE PERMITS/PLANS IN PLACE AND IS APPROVED TO ACCEPT ASSOCIATED WASTES OR EXCESS MATERIALS.

STORAGE YARD/STAGING AREA CONSTRUCTION NOTES

1. PRIOR TO COMMENCEMENT OF ANY EARTH DISTURBANCE ACTIVITY INCLUDING CLEARING AND GRUBBING, CLEARLY DELINEATE SENSITIVE AREAS INCLUDING WATERBODIES/WETLANDS, RIPARIAN FOREST BUFFER BOUNDARIES (IF ANY), THE LIMITS OF CLEARING, LOCATIONS OF UTILITIES, TREES THAT ARE TO REMAIN UNDISTURBED WITHIN THE PROJECT SITE, CULTURAL RESOURCE SITES AND RARE SPECIES HABITAT, AS APPLICABLE. AVOIDANCE AREAS WILL BE MARKED WITH APPROPRIATE FENCING, SIGNAGE, AND/OR FLAGGING BASED ON ENVIRONMENTAL SURVEYS AND PERMIT CONDITIONS.

2. INSTALL STABILIZED ROCK CONSTRUCTION ENTRANCES WHERE VEHICLES ENTER CONSTRUCTION AREAS FROM PUBLIC ROADS. ACCESS POINTS TO STORAGE YARDS ARE DEPICTED ON PLAN DRAWINGS; THE EI MAY ASSIST IN RELOCATING ACCESS POINTS IF SITE CONDITIONS REQUIRE.

3. INSTALL WOOD MATTING WHERE NOTED ON THE PLANS OVER SENSITIVE AREAS, SUCH AS WETLANDS.

4. INSTALL COMPOST FILTER SOCK SEDIMENT BARRIERS AFTER THE CONSTRUCTION SITE IS ACCESSED, KEEPING ASSOCIATED CLEARING AND GRUBBING LIMITED TO ONLY THAT AMOUNT REQUIRED FOR INSTALLATION OF PERIMETER BMPS.

5. IMPLEMENT LAND CLEARING AND GRADING ONLY AFTER ALL DOWN SLOPE E&S BMPS HAVE BEEN CONSTRUCTED. SITE WILL BE GRADED FOR THE STORAGE OF PIPE, STOCKPILED SOIL, PARKING AND OTHER APPROVED CONSTRUCTION SUPPORT ACTIVITIES, AS NECESSARY. THESE GRADING EFFORTS ARE ANTICIPATED TO BE MINOR AND WILL ONLY BE TO THE EXTENT NECESSARY FOR SAFE UTILIZATION OF THE AREA. SPECIFIC AREAS TO BE GRADED WILL BE DETERMINED BASED ON THE NEEDS OF THE CONTRACTOR AT THE TIME OF USE.

6. PERFORM TOPSOIL STRIPPING AND SEGREGATION, AND GRAVEL PLACEMENT (IF NECESSARY) OR OTHER UPGRADES TO THE STORAGE YARD AREA. PLACE GEOTEXTILE UNDERNEATH AREAS WHERE GRAVEL WILL BE PLACED SO GRAVEL CAN BE REMOVED WHEN YARD WILL NO LONGER BE USED.

7. UPON COMPLETION OF THE USE OF THE STORAGE YARD, RETURN SITE TO ITS PRE-CONSTRUCTION CONTOURS AND CONDITIONS, INCLUDING THE REMOVAL OF ADDED GRAVEL AREAS.

8. INSTALL STABILIZATION BMPS AND MEASURES TO ALL DISTURBED AREAS IN ACCORDANCE WITH STABILIZATION SPECIFICATION DEFINED WITHIN THIS PLAN INCLUDING: SURFACE ROUGHENING/SACRIFICATION, APPLICATION OF FERTILIZER AND LIME, PERMANENT SEEDING, MULCHING AND/OR APPLICATION OF EROSION CONTROL BLANKET.

9. TEMPORARY E&S BMPS MAY BE REMOVED AFTER THE ENTIRE DISTURBED AREA TRIBUTARY TO EACH BMP REACHES PERMANENT STABILIZATION. PERMANENT STABILIZATION IS DEFINED AS A MINIMUM UNIFORM, PERENNIAL 70% VEGETATIVE COVER OR OTHER NON-VEGETATIVE COVER WITH A DENSITY SUFFICIENT TO RESIST ACCELERATED EROSION. REMOVE ALL REMAINING SEDIMENT BARRIERS, ADDED GRAVEL AREAS, ROCK CONSTRUCTION ENTRANCES. IMMEDIATELY STABILIZE ANY DISTURBANCES ASSOCIATED WITH THE REMOVAL OF THE BMPS.

STREAM AND/OR WETLAND CROSSING NOTES

1. EQUIPMENT WORKING WITHIN OR DRIVING ACROSS WETLAND AREAS WILL REQUIRE THE USE OF WOOD MATS.

2. SEGREGATE TOPSOIL FROM THE WETLAND AREA DISTURBED BY TRENCHING, EXCEPT IN AREAS WHERE STANDING WATER IS PRESENT OR SOILS ARE SATURATED OR FROZEN.

3. TOPSOIL WILL BE STOCKPILED IN A TEMPORARY WORKSPACE OR ADDITIONAL TEMPORARY WORKSPACE DEPENDING UPON SITE SPECIFIC CONDITIONS AND AT THE DISCRETION OF THE EI.

4. LIQUID MULCH BINDERS SHALL NOT BE USED WITHIN 100 FEET OF ANY WETLAND/WATERBODY.

5. EROSION CONTROL BLANKETS WILL BE INSTALLED WITHIN 100 FEET OF HQ AND EV WATERBODIES, UNLESS WATERBODY IS LOCATED WITHIN A WETLAND, AND ON ANY SLOPE 3H:1V OR STEEPER.

6. WHERE TRAVEL LANES INTERSECT COMPOST FILTER SOCK FOR A WETLAND OR STREAM, THE COMPOST FILTER SOCKS WILL BE MOVED AT THE DISCRETION OF THE EI TO MAINTAIN E&S PROTECTION. THE COMPOST FILTER SOCKS WILL BE REPLACED AT THE END OF EACH WORK DAY. STRAW BALES WILL NOT BE USED AS A SEDIMENT BARRIER AT WETLAND OR STREAM CROSSINGS IN HQ OR EV WATERSHEDS.

7. IT IS ACCEPTABLE FOR E&S BMPS TO BE TEMPORARILY REMOVED FROM EQUIPMENT CROSSING PATHWAYS DURING PERIODS OF ACTIVE CONSTRUCTION IF THESE CONTROLS WILL BE PROPERLY REINSTALLED AT THE END OF EACH WORK DAY. THE EI WILL DIRECT THE PLACEMENT OF TEMPORARY CONTROLS, AS NECESSARY, DURING THE ACTIVE PERIODS OF CONSTRUCTION.

8. THE DRAWINGS ILLUSTRATE GENERAL FEATURES AND PLACEMENT OF E&S CONTROLS. THE FINAL CONFIGURATIONS MAY BE DETERMINED IN THE FIELD BY THE EI BASED ON SITE CONDITIONS. THE APPROPRIATE EROSION AND SEDIMENTATION CONTROL MEASURES WILL BE IMPLEMENTED WITHIN THE WORK AREA.

9. WHEN WETLAND AREAS ARE TEMPORARILY DISTURBED, ISOLATE AND STOCKPILE THE TOPSOIL FOR REPLACEMENT AFTER GRADING IS COMPLETED. IF TEMPORARY VEGETATIVE STABILIZATION IS NECESSARY, APPLY ANNUAL RYEGRASS AT A RATE NOT EXCEEDING 48 LB. PLS/ACRE. MULCH USING CLEAN STRAW AT A RATE OF 3 T/ACRE NO SOIL AMENDMENTS SHALL BE USED ON WETLAND AREAS.

WETLAND CROSSING CONSTRUCTION SEQUENCE AND GENERAL NOTES

GENERAL WETLAND CROSSING NOTES

THE FOLLOWING ARE CONSTRUCTION SEQUENCES FOR EARTH DISTURBING ACTIVITIES ASSOCIATED WITH CONSTRUCTION THROUGH WETLAND AREAS. IT SHOULD BE NOTED THAT CONSTRUCTION ACTIVITIES MAY OCCUR SIMULTANEOUSLY AND MAY NOT OCCUR IN THE EXACT ORDER LISTED BELOW. THE MAIN OBJECTIVES OF ANY WETLAND CROSSING ARE TO CONSTRUCT THE PIPELINE, RESTORE THE ORIGINAL CONTOUR OF THE WETLAND, RESTORE THE HYDROLOGY OF THE WETLAND, AND ESTABLISH NATIVE, NON-INVASIVE HYDROPHYTIC VEGETATION IN THE WETLAND. WETLAND BOUNDARIES WILL BE MARKED WITH SIGNS, FENCING, AND/OR HIGHLY VISIBLE FLAGGING UNTIL CONSTRUCTION IS COMPLETE AND MAINTAINED THROUGHOUT CONSTRUCTION.

- FOR WETLAND CROSSINGS WITHOUT STANDING WATER OR SATURATED SOILS, THE TOP 12 INCHES OF EXCAVATED SOIL (WHERE AVAILABLE) SHALL BE STOCKPILED SEPARATELY FROM THE REMAINING EXCAVATED MATERIAL. THE TRAVEL LANE IN THE CONSTRUCTION ROW MAY BE USED AS TYPICAL ACCESS WHEN THE WETLAND SOIL IS FIRM ENOUGH TO AVOID RUTTING OR IF THE CONSTRUCTION ROW HAS BEEN APPROPRIATELY STABILIZED TO AVOID RUTTING (E.G., WITH TIMBER MATS, PREFABRICATED EQUIPMENT MATS). IN WETLANDS THAT CANNOT BE APPROPRIATELY STABILIZED, ALL CONSTRUCTION EQUIPMENT, OTHER THAN THAT NEEDED TO INSTALL THE WETLAND CROSSING, SHALL USE ALTERNATE MEANS OF TRANSIT THAT DOES NOT INVOLVE CROSSING THE WETLAND.

- WETLAND CROSSINGS WILL BE CONSTRUCTED IN A MANNER THAT WILL MINIMIZE THE AMOUNT OF TIME CONSTRUCTION ACTIVITIES ARE OCCURRING IN THE WETLAND, SUCH AS THE LENGTH OF TIME THE TOPSOIL IS SEGREGATED AND THE TRENCH IS OPEN.

- TREE STUMPS, BRUSH, ROCK, GRAVEL, OR SOIL IMPORTED FROM OUTSIDE THE WETLAND WILL NOT BE USED TO STABILIZE THE CONSTRUCTION WORK AREA OR AS EQUIPMENT PADS IN THE WETLANDS. ALL EQUIPMENT MATS AND TIMBER MATS WILL BE REMOVED DURING THE FINAL RESTORATION OF THE WETLAND.

- CONSTRUCTION EQUIPMENT WILL BE LIMITED IN WETLAND AREAS TO THAT NEEDED TO PROVIDE CONSTRUCTION ACCESS ACROSS THE WETLAND, CLEAR THE CONSTRUCTION WORK AREA, DIG THE TRENCH, FABRICATE AND INSTALL THE PIPELINE, BACKFILL THE TRENCH, AND RESTORE THE LOD.

- THE PROJECT LOD IS DEPICTED ON THE E&S PLAN. NO ACTIVITIES ARE AUTHORIZED OUTSIDE THE LOD UNLESS PRIOR APPROVAL IS RECEIVED FROM THE LOCAL COUNTY CONSERVATION DISTRICT AND OR REGIONAL OFFICE OF DEP.

- CONSTRUCTION IN THE WETLAND WILL BE POSTPONED IF WATER LEVELS ARE DEEMED TO BE UNUSUALLY HIGH.

- LIQUID MULCH BINDERS SHALL NOT BE USED WITHIN 100 FEET OF ANY WETLAND.

WETLAND CROSSING CONSTRUCTION SEQUENCES

FOR SATURATED WETLANDS CROSSINGS, THE E&S CONSTRUCTION SEQUENCE WILL BE IMPLEMENTED WITH THE FOLLOWING PROVISIONS:

1. THE EI WILL VERIFY THAT CLEAN-UP KITS FOR POTENTIAL FLUID SPILLS ARE AVAILABLE AT THE WETLAND CROSSING SITE PRIOR TO THE ENTRY OF ANY EQUIPMENT INTO THE WETLAND CONSTRUCTION AREA.

2. TIMBER MATS WILL INSTALLED ACROSS THE WETLAND ALONG THE TRAVEL LINE, IF NECESSARY ACCORDING TO SATURATION CONDITIONS.

3. THE CONSTRUCTION WORK AREA THROUGH THE WETLAND WILL BE CLEARED TO THE SPECIFIC WIDTH AS SHOWN ON THE E&S PLAN DRAWINGS. TREES WILL NOT BE REMOVED/GRUBBED WITHIN 50 FEET OS STREAMS UNTIL CONSTRUCTION THROUGH THAT AREA. ALL BRUSH AND TREES WILL BE FELLED INTO THE CONSTRUCTION WORK AREA TO PREVENT OFF-CONSTRUCTION WORK AREA DAMAGE TO TREES AND STRUCTURES. ALL CLEARED MATERIALS WILL BE STAGED FOR DISPOSAL, IF NECESSARY AT LEAST 50 FEET OUTSIDE OF THE WETLAND. STUMP REMOVAL SHALL BE LIMITED TO THE TRENCH LINE, UNLESS THE STUMPS CAUSE UNSAFE WORKING CONDITIONS.

4. TEMPORARY E&S CONTROLS WILL BE INSTALLED PRIOR TO EARTH DISTURBING ACTIVITIES TO MINIMIZE IMPACTS TO THE ENVIRONMENT. THIS INCLUDES INSTALLATION OF APPROPRIATE SIZED COMPOST FILTER SOCK SEDIMENT BARRIERS OR OTHER APPROVED EROSION AND SEDIMENT CONTROL DEVICES IN HQ WATERSHEDS AS DEPICTED ON THE E&S PLAN.

5. THE EI WILL EXAMINE THE TEMPORARY E&S CONTROLS AT LEAST EVERY SEVEN CALENDAR DAYS FOLLOWING THEIR INSTALLATION AND FOLLOWING PRECIPITATION EVENTS THAT CAUSE RUNOFF. THE GOAL OF THE EXAMINATION WILL BE TO ENSURE THAT SEDIMENT GENERATED WITHIN THE WORK SPACE CANNOT REACH THE WETLAND. IF ADDITIONAL E&S CONTROLS ARE REQUIRED, THESE WILL BE INSTALLED PROMPTLY BY THE CONTRACTOR.

6. THE TRENCH WILL BE EXCAVATED ACROSS THE WETLAND. WETLAND TOPSOIL SHALL BE SEPARATED FROM SUBSOIL DURING EXCAVATION, TO THE EXTENT POSSIBLE IN SATURATED CONDITIONS.

7. PUMPS MAY BE REQUIRED TO DEWATER THE EXCAVATED TRENCH AT VARIOUS TIMES DURING CONSTRUCTION. WATER FROM THE PUMPING OPERATION WILL BE DISCHARGED TO A FILTER BAG LOCATED IN A WELL VEGETATED UPLAND AREA. THE EI WILL VERIFY THAT THESE STRUCTURES ARE PLACED IN AN APPROPRIATE LOCATION. ANY DEWATERING STRUCTURE WILL BE REMOVED AS SOON AS POSSIBLE AFTER THE COMPLETION OF DEWATERING ACTIVITIES.

8. THE TRENCH WILL BE BACKFILLED WITH MATERIAL FROM THE MATERIAL STOCKPILES. PLACE THE

9. SUBSOIL IN THE TRENCH FIRST AND FILL THE WETLAND TOPSOIL LAST. CARE WILL BE TAKEN TO ENSURE THAT THE FINAL GRADE WITHIN THE WETLAND APPROXIMATES THE ORIGINAL GRADE. ANY EXCESS SOIL WILL BE DISPOSED OF IN UPLAND AREAS. NO EXCESSIVE SOIL WILL BE PLACED IN WETLANDS.

10. WHEN WETLAND CONSTRUCTION AND RESTORATION IS COMPLETED AND ACCESS ACROSS THE WETLAND WILL NO LONGER BE NEEDED, THE TIMBER MATS WILL BE REMOVED. TIMBER MATS MAY REMAIN IN PLACE AS A TRAVEL LANE ACROSS THE WETLAND BUT WILL BE REMOVED WHEN NO LONGER NECESSARY.

11. APPLY ANNUAL RYEGRASS AT A RATE NOT EXCEEDING 48 LB PURE LIVE SEED ("PLS")/ACRE. MULCH USING CLEAN STRAW AT A RATE OF 3 TONS/ACRE. NO SOIL AMENDMENTS SHALL BE USED ON WETLAND AREAS.

HQ/EV WATERSHEDS

THE FOLLOWING SITES ARE LOCATED IN HIGH QUALITY (HQ) OR EXCEPTIONAL VALUE (EV) WATERSHEDS:

- PAOLI PIKE BLOWDOWN (HQ, RIDLEY CREEK WATERSHED)
- PICKERING CREEK BLOWDOWN (HQ, PICKERING CREEK WATERSHED)
- CROMBY BLOWDOWN (HQ, STONY RUN WATERSHED)

SOIL TYPE AND CHARACTERISTICS

MAP SYMBOL	SOIL NAME	SLOPE (%)
AmB	AMWELL SILT LOAM	3-8%
Bo	BOWMANSVILLE-KNAUERS SILT LOAMS	0-3%
ByB2	BUTLERTOWN SILT LOAM	3-8%
CaB	CALIFON LOAM	3-8%
Co	CODORUS SILT LOAM	0-3%
Gb	GIBRALTAR SILT LOAM	0-2%
GdC	GALDSTONE GRAVELLY LOAM	8-15%
GeB	GLENELG CHANNERY LOAM	3-8%
Ha	HATBORO SILT LOAM	0-3%
MaC	MANOR LOAM	8-15%
OtA	OTHELLO SILT LOAMS	0-2%
PeB	PENN SILT LOAM	3-8%
PeC	PENN SILT LOAM	8-15%
PeD	PENN SILT LOAM	15-25%
ReA	READINGTON SILT LOAM	0-3%
ReB	READINGTON SILT LOAM	3-8%
RhB	REAVILLE SILT LOAM	3-8%
Rt	ROWLAND SILT LOAM	0-3%
UdB	UDORTHENTS	0-8%
Up	URBAN LAND	0-3%
UrB	URBAN LAND	0-3%
W	WATER	
We	WEHADKEE SILT LOAM	0-3%

CONFIDENTIAL
THESE DESIGNS AND DRAWINGS ARE CONFIDENTIAL & ARE THE EXCLUSIVE PROPERTY OF: NV5, INC., PHILADELPHIA, PENNSYLVANIA. NO COPY OR REPRODUCTION MAY BE MADE WITHOUT WRITTEN APPROVAL.

ADELPHIA GATEWAY

COMMONWEALTH OF PENNSYLVANIA REGISTERED PROFESSIONAL MICHAEL JAMES CONNOR ENGINEER No. 078570-E

DATE: 10/25/18

REV	DESCRIPTION	CHK	DATE	APP	DATE

REVISION

DRAWN BY	DB	10/25/18
DESIGNED BY	ML	10/25/18
CHECKED BY	MC	10/25/18
APPROVED BY	RH	
NV5 JOB NO.	27317-0000050	
PLOT SCALE		
MODEL ID		

NV5
NV5, Inc.
1315 Walnut Street, Suite 900
Philadelphia, PA 19107
T: 215-751-1133

EROSION & SEDIMENT CONTROL PLAN
GENERAL NOTES
SHEET 3 OF 4

SCALE: N/A | DRAWING NUMBER: ES-4 | REV:

10/25/2018 1:15 PM TYLER MIRRA

TREE PROTECTION NOTES

1. THE CONTRACTOR SHALL BE RESPONSIBLE FOR PROTECTION OF TREES DURING CONSTRUCTION. CARE SHALL BE TAKEN TO PROTECT TREES BY CONTROLLING THE ACTIVITIES OCCURRING WITHIN TREE PROTECTION ZONES.

2. ALL ON-SITE WORKERS SHALL BE AWARE OF THE TREE PROTECTION MEASURES AND THE CONSEQUENT RESTRICTIONS AND REGULATIONS IMPLIED.

3. THE CONTRACTOR SHALL IDENTIFY THE "TREE PROTECTION ZONE". THE TREE PROTECTION ZONE IS THE AREA WITHIN THE DRIP LINE OF EXISTING TREES, OR WITHIN THE PERIMETER DRIPLINE OF GROUPS OF TREES, OR WITHIN TEN (10) FT. OF THE TRUNK (WHICHEVER IS GREATER), UNLESS OTHERWISE SHOWN ON THE DRAWINGS.

4. ANY DAMAGE TO EXISTING TREES DURING CONSTRUCTION SHALL BE THE CONTRACTOR'S RESPONSIBILITY. THE CONTRACTOR SHALL MITIGATE SUCH DAMAGED TREES AT THE DIRECTION OF THE OWNER OR LOCAL AUTHORITIES, AT THE CONTRACTOR'S EXPENSE.

5. TEMPORARY WOODEN TREE GUARDS SHALL BE INSTALLED AT EACH EXISTING TREE TO REMAIN WITHIN THE LIMITS OF CONSTRUCTION, AND A TEMPORARY SNOW FENCE BOUNDARY SHALL BE INSTALLED AT THE PERIMETER OF THE TPZ OR AS SHOWN ON THE DRAWINGS.

6. TREE GUARDS WITH WRAP FOR INDIVIDUAL TREES, AND TEMPORARY SNOW FENCE BOUNDARY SHALL BE MAINTAINED THROUGHOUT THE COURSE OF THE CONTRACT. TREE GUARDS ARE NOT TO BE REMOVED UNTIL ALL WORK AROUND EXISTING TREES IS COMPLETE. IF REQUIRED TO INSTALL PROPOSED WORK, PROTECTION SHALL BE REMOVED UNTIL THE WORK IS COMPLETE.

7. THE CONTRACTOR SHALL TAKE EXTREME CARE TO PROTECT THE ROOT SYSTEMS OF EXISTING TREES. BULK MATERIAL, EQUIPMENT, OR VEHICLES SHALL NOT BE STOCKPILED OR PARKED WITHIN THE TPZ TO MINIMIZE SURFACE AND SUBSURFACE ROOT AND SOIL COMPACTION. THIS APPLIES TO ALL AREAS WITHIN OR OUTSIDE THE CONTRACT LIMITS.

8. IF STOCKPILING OCCURS WITHIN THE TPZ, A STOP WORK ORDER SHALL BE ISSUED IMMEDIATELY. WORK SHALL NOT RE-COMMENCE UNTIL ALL STOCKPILED MATERIAL IS REMOVED FROM THE ZONE AND TREE REMEDIATION IS SATISFIED.

9. NO RUNOFF OR SPILLAGE OF NOXIOUS MATERIALS OR EXCESSIVE WETTING CAUSED BY CONSTRUCTION OPERATIONS SHALL OCCUR WITHIN TREE PROTECTION ZONES.

10. HEAT SOURCES, FLAMES, IGNITION SOURCES, AND SMOKING ARE PROHIBITED WITHIN OR NEAR WOODCHIP MULCH TREE PROTECTION ZONES.

11. THE CONTRACTOR SHALL EXERCISE EXTREME CARE IN REMOVING CONCRETE SIDEWALK AND BASE MATERIAL WITHIN THE DRIPLINE OF EXISTING TREES - LIFTING RATHER THAN DRAGGING PIECES OF PAVING.

ADDITIONAL NOTES FOR CHESTER AND DELAWARE COUNTY PROJECTS:

1. BEFORE INITIATING ANY REVISION TO THE APPROVED EROSION AND SEDIMENT CONTROL PLAN OR REVISIONS TO OTHER PLANS WHICH MAY AFFECT THE EFFECTIVENESS OF THE APPROVED E & S CONTROL PLAN, THE OPERATOR MUST RECEIVE APPROVAL OF THE REVISIONS FROM THE CHESTER COUNTY CONSERVATION DISTRICT. THE OPERATOR SHALL ASSURE THAT THE APPROVED EROSION AND SEDIMENT CONTROL PLAN IS PROPERLY AND COMPLETELY IMPLEMENTED. IMMEDIATELY UPON DISCOVERING UNFORESEEN CIRCUMSTANCES POSING THE POTENTIAL FOR ACCELERATED EROSION AND/OR SEDIMENT POLLUTION, THE OPERATOR SHALL IMPLEMENT APPROPRIATE BEST MANAGEMENT PRACTICES TO ELIMINATE POTENTIAL FOR ACCELERATED EROSION AND/OR SEDIMENT POLLUTION. §102.4(5)(XIV).

2. ALL PUMPING OF SEDIMENT LADEN WATER OR POTENTIALLY SEDIMENT LADEN WATER SHALL BE THROUGH A SEDIMENT CONTROL BMP, SUCH AS A PUMPED WATER FILTER BAG DISCHARGING OVER NON-DISTURBED AREAS. (PLEASE SHOW A DETAIL OF THIS FACILITY ON THE DETAIL SHEET.). §102.4(5)(XIV).

3. THE CONTRACTOR IS ADVISED TO BECOME THOROUGHLY FAMILIAR WITH THE PROVISIONS OF THE APPENDIX 64, EROSION CONTROL RULES AND REGULATIONS, TITLE 25, PART 1, DEPARTMENT OF ENVIRONMENTAL PROTECTION, SUBPART C, PROTECTION OF NATURAL RESOURCES, ARTICLE III, WATER RESOURCES, CHAPTER 102, EROSION CONTROL. §102.4(5)(XIV).

4. THE OPERATOR SHALL REMOVE FROM THE SITE, RECYCLE, OR DISPOSE OF ALL BUILDING MATERIALS AND WASTES IN ACCORDANCE WITH THE DEPARTMENT'S SOLID WASTE MANAGEMENT REGULATIONS AT 25 PA. CODE 260.1 ET SEQ., 271.1 ET SEQ., AND 287.1 ET SEQ. THE CONTRACTOR SHALL NOT ILLEGALLY BURY, DUMP, OR DISCHARGE ANY BUILDING MATERIAL OR WASTES AT THE SITE. §102.4(5)(XI).

5. A COPY OF THE APPROVED EROSION AND SEDIMENT CONTROL PLAN MUST BE AVAILABLE AT THE PROJECT SITE AT ALL TIMES. ADDITIONALLY, THE OPERATOR SHALL ASSURE THAT AN EROSION AND SEDIMENT CONTROL PLAN HAS BEEN PREPARED, AND HAS BEEN APPROVED BY THE CHESTER COUNTY CONSERVATION DISTRICT AND/OR LOCAL MUNICIPALITY IN COMPLIANCE WITH CHAPTER 102 RULES & REGULATIONS, AND IS BEING IMPLEMENTED AND MAINTAINED FOR ALL OFF SITE SOIL AND/OR ROCK SPOIL AND/OR BORROW AREAS. §102.4(5)(XIV).

ADDITIONAL NOTES FOR BUCKS AND DELAWARE COUNTY PROJECTS:

1. STOCKPILE HEIGHTS MUST NOT EXCEED 35 FEET; STOCKPILE SLOPES MUST NOT EXCEED 2:1.

2. THE OPERATOR/RESPONSIBLE PERSON (O/RP) ON SITE SHALL ASSURE THAT THE APPROVED EROSION AND SEDIMENT CONTROL PLAN IS PROPERLY AND COMPLETELY IMPLEMENTED.

3. IMMEDIATELY UPON DISCOVERING UNFORESEEN CIRCUMSTANCES POSING THE POTENTIAL FOR ACCELERATED EROSION AND/OR SEDIMENT POLLUTION, THE O/RP SHALL IMPLEMENT APPROPRIATE BEST MANAGEMENT PRACTICES (BMPS) TO ELIMINATE THE POTENTIAL FOR ACCELERATED EROSION AND/OR SEDIMENT POLLUTION.

4. THE O/RP SHALL ASSURE THAT AN EROSION AND SEDIMENT CONTROL PLAN HAS BEEN PREPARED AND APPROVED BY THE BUCKS COUNTY CONSERVATION DISTRICT AND IS BEING IMPLEMENTED AND MAINTAINED FOR ALL SOILS AND/OR ROCK SPOIL AND BORROW AREAS REGARDLESS OF THEIR LOCATIONS.

5. ALL PUMPING OF SEDIMENT-LADEN WATER SHALL BE THROUGH A SEDIMENT CONTROL BMP SUCH AS A PUMPED WATER FILTER BAG DISCHARGING OVER AN UNDISTURBED AREA.

6. A COPY OF THE APPROVED EROSION AND SEDIMENT CONTROL PLAN MUST BE AVAILABLE ON THE PROJECT SITE AT ALL TIMES.

7. EROSION AND SEDIMENT BMPS MUST BE CONSTRUCTED, STABILIZED AND FUNCTIONAL BEFORE SITE DISTURBANCE BEGINS WITHIN THE TRIBUTARY AREAS OF THOSE BMPS.

8. AFTER FINAL SITE STABILIZATION HAS BEEN ACHIEVED, TEMPORARY EROSION AND SEDIMENT BMP CONTROLS MUST BE REMOVED. AREAS DISTURBED DURING THE REMOVAL OF THE BMPS MUST BE STABILIZED IMMEDIATELY.

9. AT LEAST SEVEN (7) DAYS BEFORE STARTING ANY EARTH DISTURBANCE ACTIVITY, THE O/RP SHALL INVITE ALL CONTRACTORS INVOLVED IN THAT ACTIVITY, THE LANDOWNER, ALL APPROPRIATE MUNICIPAL OFFICIALS, THE EROSION AND SEDIMENT CONTROL PLAN DESIGNER AND THE BUCKS COUNTY CONSERVATION DISTRICT TO A PRE-CONSTRUCTION MEETING. ALSO, AT LEAST THREE (3) DAYS BEFORE STARTING ANY EARTH DISTURBANCE ACTIVITY, ALL CONTRACTORS INVOLVED IN THAT ACTIVITY SHALL NOTIFY THE PENNSYLVANIA ONE-CALL SYSTEM INC. AT 1-800-242-1776 TO DETERMINE ANY UNDERGROUND UTILITIES LOCATIONS.

10. IMMEDIATELY AFTER EARTH DISTURBANCE ACTIVITY CEASES, THE O/RP SHALL STABILIZE ANY AREAS DISTURBED BY THE ACTIVITY. DURING NON-GERMINATING PERIODS, MULCH MUST BE APPLIED AT SPECIFIED RATES. DISTURBED AREAS THAT ARE NOT FINISHED GRADE AND WHICH WILL BE RE-DISTURBED WITHIN ONE YEAR MUST BE STABILIZED IN ACCORDANCE WITH TEMPORARY VEGETATIVE STABILIZATION SPECIFICATIONS.

11. DISTURBED AREAS THAT ARE AT A FINISHED GRADE OR WHICH WILL NOT BE RE-DISTURBED WITHIN ONE YEAR MUST BE STABILIZED IN ACCORDANCE WITH PERMANENT VEGETATIVE STABILIZATION SPECIFICATIONS.

12. AN AREA SHALL BE CONSIDERED TO HAVE ACHIEVED FINAL STABILIZATION WHEN IT HAS A MINIMUM UNIFORM 70% VEGETATIVE OR OTHER PERMANENT NON-VEGETATIVE COVER WITH A DENSITY SUFFICIENT TO RESIST ACCELERATED SURFACE EROSION AND SUBSURFACE CHARACTERISTICS SUFFICIENT TO RESIST SLIDING AND OTHER MOVEMENTS.

13. UPON THE INSTALLATION OF TEMPORARY SEDIMENT BASIN RISER(S), A QUALIFIED SITE REPRESENTATIVE SHALL CONDUCT AN IMMEDIATE INSPECTION OF THE RISER(S), WHEREUPON THE BUCKS COUNTY CONSERVATION DISTRICT SHALL BE NOTIFIED IN WRITING THAT THE RISER IS SEALED (WATERTIGHT).

14. AT STREAM CROSSINGS, A 50-FOOT BUFFER SHALL BE MAINTAINED. ON BUFFERS, CLEARINGS, SOD DISTURBANCES AND EXCAVATIONS, EQUIPMENT TRAFFIC SHOULD BE MINIMIZED. ACTIVITY SUCH AS STACKING LOGS, BURNING CLEARED BRUSH, DISCHARGED RAINWATER FROM TRENCHES, WELDING PIPE SECTIONS, REFUELING AND MAINTAINING EQUIPMENT SHOULD BE AVOIDED WITHIN BUFFER ZONES.

15. UNTIL A SITE IS STABILIZED, ALL EROSION AND SEDIMENT BMPS MUST BE MAINTAINED PROPERLY. MAINTENANCE MUST INCLUDE INSPECTIONS OF ALL EROSION CONTROL BMPS AFTER EACH RUNOFF EVENT AND ON A WEEKLY BASIS. ALL PREVENTATIVE AND REMEDIAL MAINTENANCE WORK, INCLUDING CLEANOUT, REPAIR, REPLACEMENT, RE-GRADING, RE-SEEDING, RE-MULCHING AND REONETTING MUST BE PERFORMED IMMEDIATELY. IF EROSION AND SEDIMENT CONTROL BMPS FAIL TO PERFORM AS EXPECTED, REPLACEMENT BMPS, OR MODIFICATIONS OF THOSE INSTALLED, WILL BE REQUIRED.

16. SEDIMENT REMOVED FROM BMPS SHALL BE DISPOSED OF ON-SITE IN LANDSCAPED AREAS OUTSIDE OF STEEP SLOPES, WETLANDS, FLOODPLAINS OR DRAINAGE SWALES AND IMMEDIATELY STABILIZED OR PLACED IN SOIL STOCKPILES AND STABILIZED.

17. ALL BUILDING MATERIAL AND WASTES MUST BE REMOVED FROM THE SITE AND RECYCLED IN ACCORDANCE WITH DEP'S SOLID WASTE REGULATIONS (25 PA CODE 260.1 ET SEQ., 271.1 ET SEQ., AND 287.1 ET SEQ.) AND/OR ANY ADDITIONAL LOCAL, STATE OR FEDERAL REGULATIONS. NO BUILDING MATERIALS (USED OR UNUSED) OR WASTE MATERIALS SHALL BE BURNED, BURIED, DUMPED, OR DISCHARGED AT THE SITE.

PROJECT GENERAL NOTES

1. INFORMATION PROVIDED WITHIN THIS PLAN BY NV5. INC. AND THE PROFESSIONAL ENGINEER (P.E.) THAT SIGNED AND SEALED THIS PLAN INCLUDES DESIGN OF EROSION AND SEDIMENTATION CONTROL (E&S) BEST MANAGEMENT PRACTICES (BMPS) FOR THE PURPOSE OF PREVENTING AND/OR MINIMIZING EROSION AND SEDIMENTATION DURING CONSTRUCTION OF THIS PROJECT. THIS PLAN HAS BEEN PREPARED FOR THE DESIGN OF E&S BMPS ONLY AND HAS BEEN PREPARED IN RELIANCE ON SOURCE DATA AS PROVIDED AND DESCRIBED IN GENERAL NOTE 2 BELOW. TOPOGRAPHY, CONTOURS, AND ALL IDENTIFICATION, CHARACTERIZATION, AND/OR LOCATION OF SITE FEATURES (E.G. STRUCTURES, ROADWAYS, ETC.) ARE ASSUMED TO BE ACCURATE; HOWEVER NV5, INC. AND THE P.E. THAT SIGNED AND SEALED THIS PLAN HAVE NOT FIELD VERIFIED ALL DATA.

2. SOURCE DATA:
   - SOILS MAPPING OBTAINED FROM THE UNITED STATES DEPARTMENT Of AGRICULTURE (USDA) NATURAL RESOURCES CONSERVATION SERVICE (NRCS) SOIL SURVEY GEOGRAPHIC (SSURGO) DATABASE.
   - WATERSHED MAPPING OBTAINED FROM THE UNITED STATES DEPARTMENT OF AGRICULTURE (USDA) NATURAL RESOURCES
   - TOPOGRAPHIC SURVEY AT THE FOLLOWING SITES WERE OBTAINED BY HUNT, GUILLOT & ASSOCIATES, LLC, FOR USE BY NV5:
     - MARCUS HOOK COMPRESSOR STATION
     - TRANSCO METER STATION
     - SKIPPACK PIKE METER STATION
     - QUAKERTOWN COMPRESSOR STATION
   - TOPOGRAPHIC MAPPING FOR THE REMAINDER OF THE SITES OBTAINED FROM PENNSYLVANIA MAPMAKER (PAMAP) PROGRAM LIGHT DETECTION AND RANGING PROCESSING/CONTOUR ENHANCEMENT LINES OF PENNSYLVANIA (2006). BASE MAPPING FOR THESE SITES OBTAINED FROM AERIAL IMAGING.
   - IDENTIFICATION, CHARACTERIZATION, AND/OR DELINEATION OF ENVIRONMENTAL FEATURES (E.G. WETLANDS, WATERBODIES, AND RIVER/STREAMBANK) PERFORMED BY NV5, INC.
   - 100-YR FLOODPLAIN OBTAINED FROM THE FEDERAL EMERGENCY MANAGEMENT AGENCY (FEMA) FLOOD SERVICE CENTER DATABASE.

3. CONTRACTOR RESPONSIBILITIES:
   THE CONTRACTOR, ALTHOUGH UNKNOWN AT TIME OF PLAN ISSUANCE, WILL BE IDENTIFIED BY THE OWNER AT CONTRACT BID. CONTRACTOR IS RESPONSIBLE FOR ALL MEANS, METHODS, PROCEDURES. SEQUENCING, AND TECHNIQUES INVOLVED WITH ALL CONSTRUCTION ACTIVITIES. CONTRACTOR SHALL BE SOLELY RESPONSIBLE FOR MAINTAINING AND PRESERVING THE INTEGRITY OF ALL ENVIRONMENTAL FEATURES AND/OR ALL AREAS THAT ARE NOT SUPPOSED TO BE DISTURBED (E.G. WORK OUTSIDE OF THE LIMITS OF DISTURBANCE). PRIOR TO ANY EARTH DISTURBANCE ACTIVITIES, THE CONTRACTOR IS RESPONSIBLE FOR FIELD VERIFYING THAT CONDITIONS MATCH THOSE DEPICTED ON THE PLANS AND NOTIFYING OWNER AND/OR DESIGNATED REPRESENTATIVE OF ANY DISCREPANCIES (E.G. TOPOGRAPHY, DELINEATED WETLANDS/WATERBODIES, ACCESS ROADS, AND POINTS OF INGRESS AND EGRESS.)

4. CONTRACTOR SHALL REFER TO PADEP EROSION AND SEDIMENT POLLUTION CONTROL PROGRAM MANUAL, TECHNICAL GUIDANCE NUMBER 363-2134-008 FOR E&S SPECIFICATIONS.

5. UTILITIES SHOWN ARE TAKEN FROM PUBLIC RECORD. THE CONTRACTOR MUST VERIFY THE EXACT LOCATION AND DEPTH. NOT ALL UTILITIES ARE SHOWN, OR HAVE BEEN VERIFIED BY THE ENGINEER. THE CONTRACTOR SHALL BE RESPONSIBLE TO LOCATE ALL PUBLIC AND PRIVATE UTILITIES. NV5 ASSUMES NO RESPONSIBILITY FOR THE LOCATION OF UNDERGROUND UTILITIES DEPICTED ON THESE DRAWINGS. ANY REQUEST FOR ADDITIONAL UNDERGROUND UTILITIES INFORMATION SHOULD BE DIRECTED TO THE RESPECTIVE UTILITY COMPANY.

6. IN THE CASE OF CONFLICT BETWEEN ANY PART OF THESE PLANS, THE SPECIFICATIONS, OR THE CONTRACT DOCUMENTS, OR IF DISCREPANCIES ARE DISCOVERED THE CONTRACTOR SHALL NOTIFY THE ENGINEER IMMEDIATELY BY PHONE AND IN WRITING AND SHALL REQUEST A WRITTEN DETERMINATION PRIOR TO PROCEEDING WITH THE WORK INVOLVED. IF THE WORK PROCEEDS WITH THE KNOWLEDGE OF A DISCREPANCY AND WITHOUT A WRITTEN DETERMINATION, SUCH WORK WILL NOT BE CONSIDERED IN COMPLIANCE WITH THESE PLANS, THE SPECIFICATIONS, AND CONTRACT DOCUMENTS.

7. ALL WORK WITHIN A RIGHT OF WAY (R.O.W.) OR EASEMENT SHALL BE DONE IN ACCORDANCE WITH THE AGENCY OR ENTITY HAVING JURISDICTION OR OWNERSHIP OF THAT RO.W. OR EASEMENT. CONTRACTOR SHALL OBTAIN ALL PERMITS, APPROVALS, INSPECTIONS, ETC. FROM THE AGENCY OF ENTITY HAVING JURISDICTION FOR THIS WORK.

8. IT SHALL BE THE RESPONSIBILITY OF THE CONTRACTOR(S) TO PROTECT EXISTING STRUCTURES AND FACILITIES, INCLUDING UTILITIES, NOT DESIGNATED FOR DEMOLITION OR REPLACEMENT/UPGRADE SUCH AS BUILDINGS, PIPES, INLETS, MANHOLES, CABLES/WIRES, CONDUITS, APRONS, PAVEMENTS, BRIDGES, UTILITIES, TREES, ETC. FROM DAMAGE WHICH MIGHT OCCUR DURING CONSTRUCTION. EXTREME CARE SHALL BE TAKEN IN UNDERCUT AREAS. THE CONTRACTOR(S) SHALL REPLACE OR REPAIR, AS DIRECTED BY THE OWNER OR THE ENGINEER, ANY STRUCTURES OR FACILITIES DAMAGED DURING CONSTRUCTION/THE LIFE OF THE CONTRACT. NO PAYMENT WILL BE MADE FOR REPLACEMENT OR REPAIR OF DAMAGED ITEMS.

9. THE CONTRACTOR(S) ARE RESPONSIBLE FOR THE PROTECTION OF EXISTING TREES TO REMAIN. NO EQUIPMENT, MATERIALS, SOIL, OR OTHER DEBRIS SHALL BE STORED UNDER THE DRIPLINE OF THE TREE. IF TREES ARE DAMAGED, ITEMS ARE STORED, OR AREA UNDER THE DRIP IS DISTURBED, OTHER THAN DISTURBANCE CALLED FOR ON THE PLANS, IT IS THE CONTRACTOR'S RESPONSIBILITY TO CORRECT THE DAMAGE TO THE SATISFACTION OF THE DESIGN PROFESSIONAL.

10. THE CONTRACTOR(S) SHALL KEEP ALL PUBLIC AREAS CLEAN OF DEBRIS ON A DAILY BASIS.

11. THE CONTRACTOR(S) SHALL COMPLY WITH THE CLEAN FILL REQUIREMENTS AS NOTED ON THIS DRAWING AND PER APPLICABLE LOCAL, STATE, AND/OR FEDERAL REGULATIONS.

12. ALL MATERIALS DEMOLISHED OR REMOVED FROM THE PROJECT SITE, UNLESS IDENTIFIED TO BE SAVED OR SALVAGED, SHALL BE REMOVED FROM THE SITE AND DISPOSED OF PER FEDERAL, STATE AND LOCAL REGULATIONS. ALL COSTS OF HAULING, DISPOSAL, AND TIPPING FEES ARE THE RESPONSIBILITY OF THE CONTRACTOR AS PART OF THE BASE BID.

13. THE CONTRACTOR SHALL VERIFY ALL FIELD CONDITIONS PRIOR TO THE START OF CONSTRUCTION AND REPORT ANY DISCREPANCIES AND INTERFERENCES TO THE OWNER OR ENGINEER PRIOR TO THE START OF CONSTRUCTION.

14. PLAN MADE AS PER INSTRUCTIONS OF NEW JERSEY RESOURCES.

15. IT IS THE RESPONSIBILITY OF THE CONTRACTOR TO MEET ALL OF THE REQUIREMENTS OF FEDERAL, STATE, AND LOCAL AUTHORITIES, HEALTH DEPARTMENT, AND UTILITY COMPANIES IN ADDITION TO THE INFORMATION STATED IN THESE PLANS, THE SPECIFICATIONS, AND THE CONTRACT DOCUMENTS.

16. DO NOT SCALE DRAWINGS. ALL MEASUREMENTS SHALL BE TAKEN FROM DIMENSIONS SHOWN ON THE DRAWING. WHERE DIMENSIONS BETWEEN SMALL SCALE AND DETAIL DRAWINGS DIFFER, NOTIFY THE ENGINEER FOR CLARIFICATION. FIELD VERIFY ALL DIMENSIONS AND NOTIFY DESIGN PROFESSIONAL OF ANY DISCREPANCIES.

17. ALL CONTRACTORS WORKING ON THIS PROJECT SHALL BE RESPONSIBLE FOR ENSURING THAT ALL CONSTRUCTION ACTIVITIES RELATED TO THIS PROJECT ARE PERFORMED IN ACCORDANCE WITH ALL APPLICABLE O.S.H.A. (OCCUPATIONAL SAFETY AND HEALTH ADMINISTRATION) STANDARDS.

18. THE CONTRACTOR(S) SHALL OBTAIN ALL PERMITS RELATING TO THIS PROJECT PRIOR TO CONSTRUCTION.

19. THE GENERAL CONTRACTOR IS RESPONSIBLE FOR PROVIDING THE APPROPRIATE CONTRACT DOCUMENTS (PLANS, SPECIFICATIONS, AND OTHER INFORMATION) TO THE VARIOUS SUBCONTRACTORS AND TRADES IN ORDER FOR THEM TO COORDINATE AND PERFORM THE WORK.

CONFIDENTIAL
THESE DESIGNS AND DRAWINGS ARE CONFIDENTIAL & ARE THE EXCLUSIVE PROPERTY OF: NV5, INC., PHILADELPHIA, PENNSYLVANIA. NO COPY OR REPRODUCTION MAY BE MADE WITHOUT WRITTEN APPROVAL.

ADELPHIA GATEWAY

COMMONWEALTH OF PENNSYLVANIA
REGISTERED PROFESSIONAL
MICHAEL JAMES CONNOR
ENGINEER
No. 078570-E

DATE: 10/25/18

REV	DESCRIPTION	CHK	DATE	APP	DATE

REVISION

DRAWN BY	DB	10/25/18
DESIGNED BY	ML	10/25/18
CHECKED BY	MC	10/25/18
APPROVED BY	RH	
NV5 JOB NO.	27317-0000050	
PLOT SCALE		
MODEL ID		

NV5
NV5, Inc.
1315 Walnut Street, Suite 900
Philadelphia, PA 19107
T: 215-751-1133

EROSION & SEDIMENT CONTROL PLAN GENERAL NOTES SHEET 4 OF 4

SCALE	DRAWING NUMBER	REV
N/A	ES-5	

10/25/2018 1:15 PM

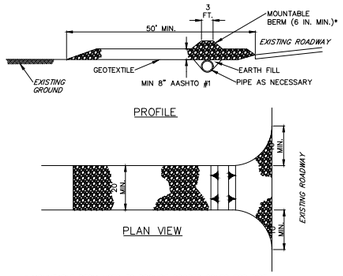

* MOUNTABLE BERM USED TO PROVIDE PROPER COVER FOR PIPE

NOTES:

REMOVE TOPSOIL PRIOR TO INSTALLATION OF ROCK CONSTRUCTION ENTRANCE. EXTEND ROCK OVER FULL WIDTH OF ENTRANCE.

RUNOFF SHALL BE DIVERTED FROM ROADWAY TO A SUITABLE SEDIMENT REMOVAL BMP PRIOR TO ENTERING ROCK CONSTRUCTION ENTRANCE.

MOUNTABLE BERM SHALL BE INSTALLED WHEREVER OPTIONAL CULVERT PIPE IS USED AND PROPER PIPE COVER AS SPECIFIED BY MANUFACTURER IS NOT OTHERWISE PROVIDED. PIPE SHALL BE SIZED APPROPRIATELY FOR SIZE OF DITCH BEING CROSSED.

MAINTENANCE: ROCK CONSTRUCTION ENTRANCE THICKNESS SHALL BE CONSTANTLY MAINTAINED TO THE SPECIFIED DIMENSIONS BY ADDING ROCK. A STOCKPILE SHALL BE MAINTAINED ON SITE FOR THIS PURPOSE. ALL SEDIMENT DEPOSITED ON PAVED ROADWAYS SHALL BE REMOVED AND RETURNED TO THE CONSTRUCTION SITE IMMEDIATELY. IF EXCESSIVE AMOUNTS OF SEDIMENT ARE BEING DEPOSTED ON ROADWAY, EXTEND LENGTH OF ROCK CONSTRUCTION ENTRANCE BY 50 FOOT INCREMENTS UNTIL CONDITION IS ALLEVIATED OR INSTALL WASH RACK. WASHING THE ROADWAY OR SWEEPING THE DEPOSITS INTO ROADWAY DITCHES, SEWERS, CULVERTS, OR OTHER DRAINAGE COURSES IS NOT ACCEPTABLE.

STANDARD CONSTRUCTION DETAIL #3-1
ROCK CONSTRUCTION ENTRANCE

NOT TO SCALE

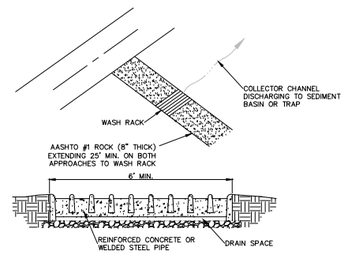

NOTES:

WASH RACK SHALL BE 20 FEET (MIN.) WIDE OR TOTAL WIDTH OF ACCESS.

WASH RACK SHALL BE DESIGNED AND CONSTRUCTED TO ACCOMMODATE ANTICIPATED CONSTRUCTION VEHICULAR TRAFFIC.

A WATER SUPPLY SHALL BE MADE AVAILABLE TO WASH THE WHEELS OF ALL VEHICLES EXITING THE SITE.

MAINTENANCE: ROCK CONSTRUCTION ENTRANCE THICKNESS SHALL BE CONSTANTLY MAINTAINED TO THE SPECIFIED DIMENSIONS BY ADDING ROCK. A STOCKPILE OF ROCK MATERIAL SHALL BE MAINTAINED ON SITE FOR THIS PURPOSE. DRAIN SPACE UNDER WASH RACK SHALL BE KEPT OPEN AT ALL TIMES. DAMAGE TO THE WASH RACK SHALL BE REPAIRED PRIOR TO FURTHER USE OF THE RACK. ALL SEDIMENT DEPOSTED ON ROADWAYS SHALL BE REMOVED AND RETURNED TO THE CONSTRUCTION SITE IMMEDIATELY. WASHING THE ROADWAY OR SWEEPING THE DEPOSITS INTO ROADWAY DITCHES, SEWERS, CULVERTS, OR OTHER DRAINAGE COURSES IS NOT ACCEPTABLE.

STANDARD CONSTRUCTION DETAIL #3-2
ROCK CONSTRUCTION ACCESS WITH WASH RACK

NOT TO SCALE

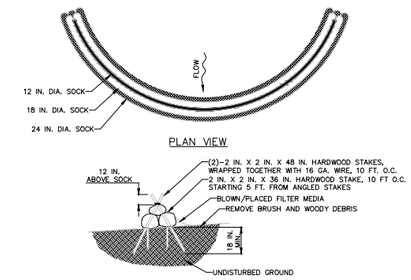

DESIGN NOTES:

1. COMPOST SOCK SEDIMENT TRAP SHALL BE SIZED TO PROVIDE 2000 CUBIC FEET OF STORAGE CAPACITY FOR EACH ACRE TRIBUTARY TO THE TRAP.
2. MINIMUM BASE WIDTH IS EQUAL TO THE HEIGHT.
3. SEDIMENT ACCUMULATION SHALL NOT EXCEED 1/3 THE TOTAL HEIGHT OF THE TRAP.
4. SOCKS SHALL BE OF LARGER DIAMETER AT THE BASE OF THE TRAP AND DECREASE IN DIAMETER FOR SUCCESSIVE LAYERS AS SHOWN ON THE PLAN VIEW.
5. ENDS OF THE TRAP SHALL BE A MINIMUM OF 1 FOOT HIGHER IN ELEVATION THAN THE MID-SECTION, WHICH SHALL BE LOCATED AT THE POINT OF DISCHARGE.

NOTES:

SOCK MATERIAL SHALL MEET THE STANDARDS OF TABLE 4.1 OF THE PA DEP EROSION CONTROL MANUAL. COMPOST SHALL MEET THE STANDARDS OF TABLE 4.2 OF THE PA DEP EROSION CONTROL MANUAL.

COMPOST SOCK SEDIMENT TRAPS SHALL NOT EXCEED THREE SOCKS IN HEIGHT AND SHALL BE STACKED IN PYRAMIDAL FORM AS SHOWN ABOVE. MINIMUM TRAP HEIGHT IS ONE 24" DIAMETER SOCK. ADDITIONAL STORAGE MAY BE PROVIDED BY MEANS OF AN EXCAVATED SUMP 12" DEEP EXTENDING 1 TO 3 FEET UPSLOPE OF THE SOCKS ALONG THE LOWER SIDE OF THE TRAP.

COMPOST SOCK SEDIMENT TRAPS SHALL PROVIDE 2,000 CUBIC FEET STORAGE CAPACITY WITH 12" FREEBOARD FOR EACH TRIBUTARY DRAINAGE ACRE. (SEE MANUFACTURER FOR ANTICIPATED SETTLEMENT.)

THE MAXIMUM TRIBUTARY DRAINAGE AREA IS 5.0 ACRES. SINCE COMPOST SOCKS ARE "FLOW-THROUGH," NO SPILLWAY IS REQUIRED.

COMPOST SOCK SEDIMENT TRAPS SHALL BE INSPECTED WEEKLY AND AFTER EACH RUNOFF EVENT. SEDIMENT SHALL BE REMOVED WHEN IT REACHES 1/3 THE HEIGHT OF THE SOCKS.

PHOTODEGRADABLE AND BIODEGRADABLE SOCKS SHALL NOT BE USED FOR MORE THAN 1 YEAR.

STANDARD CONSTRUCTION DETAIL #3-11
COMPOST SOCK SEDIMENT TRAP

NOT TO SCALE

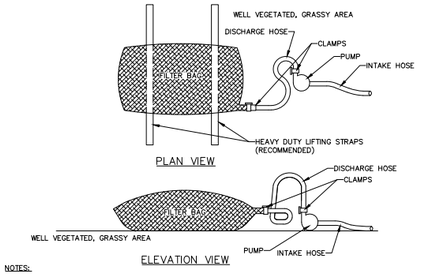

NOTES:

LOW VOLUME FILTER BAGS SHALL BE MADE FROM NON-WOVEN GEOTEXTILE MATERIAL SEWN WITH HIGH STRENGTH, DOUBLE STITCHED "U" TYPE SEAMS. THEY SHALL BE CAPABLE OF TRAPPING PARTICLES LARGER THAN 150 MICRONS. HIGH VOLUME FILTER BAGS SHALL BE MADE FROM WOVEN GEOTEXTILES THAT MEET THE FOLLOWING STANDARDS:

PROPERTY	TEST METHOD	MINIMUM STANDARD
AVG. WIDE WIDTH STRENGTH	ASTM D-4884	60 LB/IN
GRAB TENSILE	ASTM D-4632	205 LB
PUNCTURE	ASTM D-4833	110 LB
MULLEN BURST	ASTM D-3786	350 PSI
UV RESISTANCE	ASTM D-4355	70%
AOS % RETAINED	ASTM D-4751	80 SIEVE

A SUITABLE MEANS OF ACCESSING THE BAG WITH MACHINERY REQUIRED FOR DISPOSAL PURPOSES SHALL BE PROVIDED. FILTER BAGS SHALL BE REPLACED WHEN THEY BECOME 1/2 FULL OF SEDIMENT. SPARE BAGS SHALL BE KEPT AVAILABLE FOR REPLACEMENT OF THOSE THAT HAVE FAILED OR ARE FILLED. BAGS SHALL BE PLACED ON STRAPS TO FACILITATE REMOVAL UNLESS BAGS COME WITH LIFTING STRAPS ALREADY ATTACHED.

BAGS SHALL BE LOCATED IN WELL-VEGETATED (GRASSY) AREA, AND DISCHARGE ONTO STABLE, EROSION RESISTANT AREAS. WHERE THIS IS NOT POSSIBLE, A GEOTEXTILE UNDERLAYMENT AND FLOW PATH SHALL BE PROVIDED. BAGS MAY BE PLACED ON FILTER STONE TO INCREASE DISCHARGE CAPACITY. BAGS SHALL NOT BE PLACED ON SLOPES GREATER THAN 5%. FOR SLOPES EXCEEDING 5%, CLEAN ROCK OR OTHER NON-ERODIBLE AND NON-POLLUTING MATERIAL MAY BE PLACED UNDER THE BAG TO REDUCE SLOPE STEEPNESS.

NO DOWNSLOPE SEDIMENT BARRIER IS REQUIRED FOR MOST INSTALLATIONS. COMPOST BERM OR COMPOST FILTER SOCK SHALL BE INSTALLED BELOW BAGS LOCATED IN HQ OR EV WATERSHEDS, WITHIN 50 FEET OF ANY RECEIVING SURFACE WATER OR WHERE GRASSY AREA IS NOT AVAILABLE.

THE PUMP DISCHARGE HOSE SHALL BE INSERTED INTO THE BAGS IN THE MANNER SPECIFIED BY THE MANUFACTURER AND SECURELY CLAMPED. A PIECE OF PVC PIPE IS RECOMMENDED FOR THIS PURPOSE.

THE PUMPING RATE SHALL BE NO GREATER THAN 750 GPM OR 1/2 THE MAXIMUM SPECIFIED BY THE MANUFACTURER, WHICHEVER IS LESS. PUMP INTAKES SHALL BE FLOATING AND SCREENED.

FILTER BAGS SHALL BE INSPECTED DAILY. IF ANY PROBLEM IS DETECTED, PUMPING SHALL CEASE IMMEDIATELY AND NOT RESUME UNTIL THE PROBLEM IS CORRECTED.

STANDARD CONSTRUCTION DETAIL #3-16
PUMPED WATER FILTER BAG

NOT TO SCALE

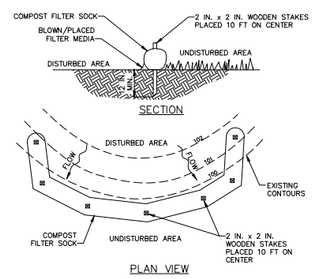

NOTES:

SOCK FABRIC SHALL MEET STANDARDS OF TABLE 4.1 OF THE PA DEP EROSION CONTROL MANUAL. COMPOST SHALL MEET THE STANDARDS OF TABLE 4.2 OF THE PA DEP EROSION CONTROL MANUAL.

COMPOST FILTER SOCK SHALL BE PLACED AT EXISTING LEVEL GRADE. BOTH ENDS OF THE BARRIER SHALL BE EXTENDED AT LEAST 8 FEET UP SLOPE AT 45 DEGREES TO THE MAIN BARRIER ALIGNMENT. MAXIMUM SLOPE LENGTH ABOVE ANY BARRIER SHALL NOT EXCEED THAT SPECIFIED FOR THE SIZE OF THE SOCK AND THE SLOPE OF ITS TRIBUTARY AREA.

TRAFFIC SHALL NOT BE PERMITTED TO CROSS COMPOST FILTER SOCKS.

ACCUMULATED SEDIMENT SHALL BE REMOVED WHEN IT REACHES 1/2 THE ABOVE GROUND HEIGHT OF THE BARRIER AND DISPOSED IN THE MANNER DESCRIBED ELSEWHERE IN THE PLAN.

COMPOST FILTER SOCKS SHALL BE INSPECTED WEEKLY AND AFTER EACH RUNOFF EVENT. DAMAGED SOCKS SHALL BE REPAIRED ACCORDING TO MANUFACTURER'S SPECIFICATIONS OR REPLACED WITHIN 24 HOURS OF INSPECTION.

BIODEGRADABLE COMPOST FILTER SOCKS SHALL BE REPLACED AFTER 6 MONTHS; PHOTODEGRADABLE SOCKS AFTER 1 YEAR. POLYPROPYLENE SOCKS SHALL BE REPLACED ACCORDING TO MANUFACTURER'S RECOMMENDATIONS.

UPON STABILIZATION OF THE AREA TRIBUTARY TO THE SOCK, STAKES SHALL BE REMOVED. THE SOCK MAY BE LEFT IN PLACE AND VEGETATED OR REMOVED. IN THE LATTER CASE, THE MESH SHALL BE CUT OPEN AND THE MULCH SPREAD AS A SOIL SUPPLEMENT.

STANDARD CONSTRUCTION DETAIL #4-1
COMPOST FILTER SOCK

NOT TO SCALE

(SHEET 1 OF 3)

TABLE 4.1
Compost Sock Fabric Minimum Specifications

Material Type	3 mil HDPE	5 mil HDPE	5 mil HDPE	Multi-Filament Polypropylene (MFPP)	Heavy Duty Multi-Filament Polypropylene (HDMFPP)
Material Characteristics	Photo-degradable	Photo-degradable	Bio-degradable	Photo-degradable	Photo-degradable
Sock Diameters	12" 18"	12" 18" 24" 32"	12" 18" 24" 32"	12" 18" 24" 32"	12" 18" 24" 32"
Mesh Opening	3/8"	3/8"	3/8"	3/8"	1/8"
Tensile Strength		26 psi	26 psi	44 psi	202 psi
Ultraviolet Stability % Original Strength (ASTM G-155)	23% at 1000 hr.	23% at 1000 hr.		100% at 1000 hr.	100% at 1000 hr.
Minimum Functional Longevity	6 months	9 months	6 months	1 year	2 years
Two-ply systems					
Inner Containment Netting		HDPE biaxial net			
		Continuously wound			
		Fusion-welded junctures			
		3/4" X 3/4" Max. aperture size			
Outer Filtration Mesh		Composite Polypropylene Fabric (Woven layer and non-woven fleece mechanically fused via needle punch)			
		3/16" Max. aperture size			
Sock fabrics composed of burlap may be used on projects lasting 6 months or less.					

Filtrexx & JMD

NOTES:

COMPOST FILTER SOCK SHALL BE MINIMUM 5 MIL HDPE BIODEGRADABLE FABRIC OR AS APPROVED BY OWNER MEETING COMPOST SOCK FABRIC MINIMUM SPECIFICATIONS IDENTIFIED IN TABLE 4.1.

CONSTRUCTION DETAIL #4-1
COMPOST FILTER SOCK

NOT TO SCALE

(SHEET 2 OF 3)

TABLE 4.2
COMPOST STANDARDS

ORGANIC MATTER CONTENT	80%-100% (DRY WEIGHT BASIS)
ORGANIC PORTION	FIBROUS AND ELONGATED
pH	5.5-8.0
MOISTURE CONTENT	35%-55%
PARTICLE SIZE	98% PASS THROUGH 1" SCREEN
SOLUBLE SALT CONCENTRATION	5.0 dS/m (mmhos/cm) MAX

REF: FIGURE 4.2 MAXIMUM PERMISSIBLE SLOPE LENGTH ABOVE COMPOST FILTER SOCKS, PADEP EROSION AND SEDIMENT POLLUTION CONTROL PROGRAM MANUEL, 2012

MAXIMUM SLOPE LENGTHS FOR COMPOST FILTER SOCK				
% SLOPE	12" DIAMETER	18" DIAMETER	24" DIAMETER	32" DIAMETER
2 (OR LESS)	510	700	1000	1300
5	270	340	500	650
10	150	250	300	400
15	100	200	250	350
20	70	150	200	250
25	50	100	150	180
30	40	90	100	125
35	40	70	90	100
40	30	60	70	90
45	30	40	60	80
50	20	30	40	50

NOTES:

COMPOST SHALL BE WELL DECOMPOSED, WEED-FREE ORGANIC MATTER DERIVED FROM AGRICULTURAL, FOOD, STUMP GRINDINGS, AND YARD OR WOOD/BARK MATTER SOURCES. THE COMPOST SHOULD BE AEROBICALLY COMPOSTED. THE COMPOST SHOULD POSSESS NO OBJECTIONABLE ODORS AND SHOULD BE REASONABLY FREE (< 1% BY DRY WEIGHT) OF MAN-MADE FOREIGN MATTER. THE COMPOST PRODUCT SHOULD NOT RESEMBLE THE RAW MATERIAL FROM WHICH IT IS DERIVED. WOOD AND BARK CHIPS, GROUND CONSTRUCTION DEBRIS OR REPROCESSED WOOD PRODUCTS ARE NOT ACCEPTABLE AS THE ORGANIC COMPONENT OF THE MIX.

THE PHYSICAL PARAMETERS OF THE COMPOST SHOULD COMPLY WITH THE STANDARDS IN TABLE 4.2. THE STANDARDS CONTAINED IN PENNDOT PUBLICATION 408 ARE AN ACCEPTABLE ALTERNATIVE.

CONSTRUCTION DETAIL #4-1
COMPOST FILTER SOCK

NOT TO SCALE

(SHEET 3 OF 3)

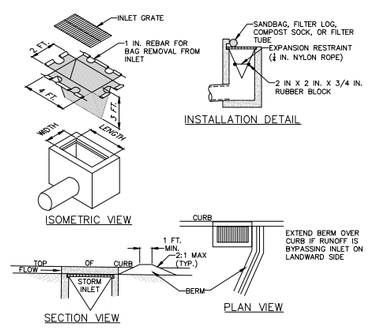

NOTES:

MAXIMUM DRAINAGE AREA = 1/2 ACRE.

INLET PROTECTION SHALL NOT BE REQUIRED FOR INLET TRIBUTARY TO SEDIMENT BASIN OR TRAP. BERMS SHALL BE REQUIRED FOR ALL INSTALLATIONS.

ROLLED EARTHEN BERM SHALL BE MAINTAINED UNTIL ROADWAY IS STONED. ROAD SUBBASE BERM SHALL BE MAINTAINED UNTIL ROADWAY IS PAVED. SIX INCH MINIMUM HEIGHT ASPHALT BERM SHALL BE MAINTAINED UNTIL ROADWAY SURFACE RECEIVES FINAL COAT.
AT A MINIMUM, THE FABRIC SHALL HAVE A MINIMUM GRAB TENSILE STRENGTH OF 120 LBS, A MINIMUM BURST STRENGTH OF 200 PSI, AND A MINIMUM TRAPEZOIDAL TEAR STRENGTH OF 50 LBS. FILTER BAGS SHALL BE CAPABLE OF TRAPPING ALL PARTICLES NOT PASSING A NO. 40 SIEVE.

INLET FILTER BAGS SHALL BE INSPECTED ON A WEEKLY BASIS AND AFTER EACH RUNOFF EVENT. BAGS SHALL BE EMPTIED AND RINSED OR REPLACED WHEN HALF FULL OR WHEN FLOW CAPACITY HAS BEEN REDUCED SO AS TO CAUSE FLOODING OR BYPASSING OF THE INLET. DAMAGED OR CLOGGED BAGS SHALL BE REPLACED. A SUPPLY SHALL BE MAINTAINED ON SITE FOR REPLACEMENT OF BAGS. ALL NEEDED REPAIRS SHALL BE INITIATED IMMEDIATELY AFTER THE INSPECTION. DISPOSE OF ACCUMULATED SEDIMENT AS WELL AS ALL USED BAGS ACCORDING TO THE PLAN NOTES.

DO NOT USE ON MAJOR PAVED ROADWAYS WHERE PONDING MAY CAUSE TRAFFIC HAZARDS.

STANDARD CONSTRUCTION DETAIL #4-15
FILTER BAG INLET PROTECTION - TYPE C INLET

NOT TO SCALE

CONFIDENTIAL
THESE DESIGNS AND DRAWINGS ARE CONFIDENTIAL & ARE THE EXCLUSIVE PROPERTY OF: NV5, INC., PHILADELPHIA, PENNSYLVANIA. NO COPY OR REPRODUCTION MAY BE MADE WITHOUT WRITTEN APPROVAL.

ADELPHIA GATEWAY

COMMONWEALTH OF PENNSYLVANIA
REGISTERED PROFESSIONAL
MICHAEL JAMES CONNOR
ENGINEER
No. 078570-E

DATE: 10/25/18

REV	DESCRIPTION	CHK	DATE	APP	DATE

REVISION

DRAWN BY	DB	10/25/18
DESIGNED BY	ML	10/25/18
CHECKED BY	MC	10/25/18
APPROVED BY	RH	
NV5 JOB NO.	27317-0000050	
PLOT SCALE		
MODEL ID		

NV5, Inc.
1315 Walnut Street, Suite 900
Philadelphia, PA 19107
T: 215-751-1133

EROSION & SEDIMENT CONTROL PLAN DETAILS
SHEET 1 OF 2

SCALE	DRAWING NUMBER	REV
N/A	ES-6	

10/25/2018 1:16 PM

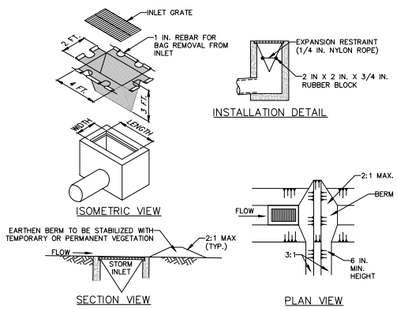

NOTES:

MAXIMUM DRAINAGE AREA = 1/2 ACRE.

INLET PROTECTION SHALL NOT BE REQUIRED FOR INLET TRIBUTARY TO SEDIMENT BASIN OR TRAP. BERMS SHALL BE REQUIRED FOR ALL INSTALLATIONS.

ROLLED EARTHEN BERM IN ROADWAY SHALL BE MAINTAINED UNTIL ROADWAY IS STONED. ROAD SUBBASE BERM ON ROADWAY SHALL BE MAINTAINED UNTIL ROADWAY IS PAVED. EARTHEN BERM IN CHANNEL SHALL BE MAINTAINED UNTIL PERMANENT STABILIZATION IS COMPLETED OR REMAIN PERMANENTLY.

AT A MINIMUM, THE FABRIC SHALL HAVE A MINIMUM GRAB TENSILE STRENGTH OF 120 LBS., A MINIMUM BURST STRENGTH OF 200 PSI, AND A MINIMUM TRAPEZOIDAL TEAR STRENGTH OF 50 LBS. FILTER BAGS SHALL BE CAPABLE OF TRAPPING ALL PARTICLES NOT PASSING A NO. 40 SIEVE.

INLET FILTER BAGS SHALL BE INSPECTED ON A WEEKLY BASIS AND AFTER EACH RUNOFF EVENT. BAGS SHALL BE EMPTIED AND RINSED OR REPLACED WHEN HALF FULL OR WHEN FLOW CAPACITY HAS BEEN REDUCED SO AS TO CAUSE FLOODING OR BYPASSING OF THE INLET. DAMAGED OR CLOGGED BAGS SHALL BE REPLACED. A SUPPLY SHALL BE MAINTAINED ON SITE FOR REPLACEMENT OF BAGS. ALL NEEDED REPAIRS SHALL BE INITIATED IMMEDIATELY AFTER THE INSPECTION. DISPOSE ACCUMULATED SEDIMENT AS WELL AS ALL USED BAGS ACCORDING TO THE PLAN NOTES.

DO NOT USE ON MAJOR PAVED ROADWAYS WHERE PONDING MAY CAUSE TRAFFIC HAZARDS.

STANDARD CONSTRUCTION DETAIL #4-16
FILTER BAG INLET PROTECTION - TYPE M INLET
NOT TO SCALE

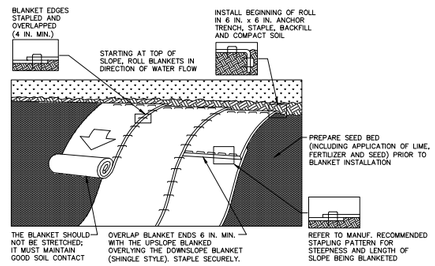

NOTES:

SEED AND SOIL AMENDMENTS SHALL BE APPLIED ACCORDING TO THE RATES IN THE PLAN DRAWINGS PRIOR TO INSTALLING THE BLANKET.

PROVIDE ANCHOR TRENCH AT TOE OF SLOPE IN SIMILAR FASHION AS AT TOP OF SLOPE.

SLOPE SURFACE SHALL BE FREE OF ROCKS, CLODS, STICKS, AND GRASS.

BLANKET SHALL HAVE GOOD CONTINUOUS CONTACT WITH UNDERLYING SOIL THROUGHOUT ENTIRE LENGTH. LAY BLANKET LOOSELY AND STAKE OR STAPLE TO MAINTAIN DIRECT CONTACT WITH SOIL. DO NOT STRETCH BLANKET.

THE BLANKET SHALL BE STAPLED IN ACCORDANCE WITH THE MANUFACTURER'S RECOMMENDATIONS.

BLANKETED AREAS SHALL BE INSPECTED WEEKLY AND AFTER EACH RUNOFF EVENT UNTIL PERENNIAL VEGETATION IS ESTABLISHED TO A MINIMUM UNIFORM 70% COVERAGE THROUGHOUT THE BLANKETED AREA. DAMAGED OR DISPLACED BLANKETS SHALL BE RESTORED OR REPLACED WITHIN 4 CALENDAR DAYS.

STANDARD CONSTRUCTION DETAIL #11-1
EROSION CONTROL BLANKET INSTALLATION
NOT TO SCALE

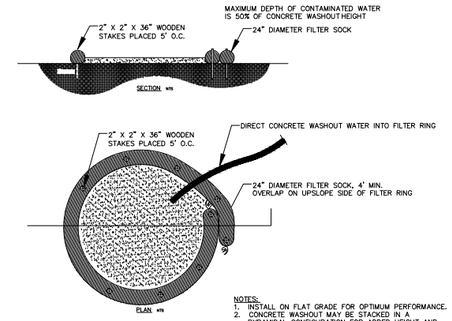

NOTES:
1. INSTALL ON FLAT GRADE FOR OPTIMUM PERFORMANCE.
2. CONCRETE WASHOUT MAY BE STACKED IN A PYRAMIDAL CONFIGURATION FOR ADDED HEIGHT AND STABILITY.
3. ALL APPLICABLE FEDERAL, STATE, AND LOCAL LAWS AND REGULATIONS MUST BE FOLLOWED IN THE USE. HANDLING, AND DISPOSAL OF POTENTIALLY HAZARDOUS MATERIALS.
4. IF CONCRETE WILL BE POURED OR OTHERWISE FORMED ON SITE, A SUITABLE WASHOUT FACILITY MUST BE PROVIDED FOR THE CLEANING OF CHUTES, MIXERS, AND HOPPERS OF THE DELIVERY VEHICLES UNLESS SUCH A FACILITY WILL BE USED AT THE SOURCE OF THE CONCRETE. UNDER NO CIRCUMSTANCES MAY WASH WATER FROM THESE VEHICLES BE ALLOWED TO ENTER ANY SURFACE WATERS.
5. DRIVERS WILL BE MADE AWARE OF WASHOUT FACILITIES THROUGH THE USE OF PROPER SIGNAGE.
6. WASHOUT FACILITIES WILL NOT BE PLACED WITHIN 50 FEET OF STORM DRAINS, OPEN DITCHES OR SURFACE WATERS.
7. WHEREVER POSSIBLE, WASHOUT FACILITIES SHOULD BE LOCATED ON SLOPES NOT EXCEEDING A 2% GRADE.
8. A SUITABLE IMPERVIOUS GEOMEMBRANE SHALL BE PLACED AT THE LOCATION OF THE WASHOUT PRIOR TO INSTALLING THE SOCKS.
9. COMPOST SOCKS SHOULD BE STAKED AS RECOMMENDED BY THE MANUFACTURER AROUND THE PERIMETER OF THE GEOMEMBRANE SO AS TO FORM A RING WITH THE ENDS OF THE SOCK LOCATED AT THE UPSLOPE CORNER.
10. CARE SHOULD BE TAKEN TO ENSURE CONTINUOUS CONTACT OF THE SOCK WITH THE GEOMEMBRANE AT ALL LOCATIONS.
11. WHERE NECESSARY, AN 18 DIAMETER SOCK MAY BE STACKED AND STAKED ONTO DOUBLE 24 SOCKS IN A PYRAMIDAL CONFIGURATION FOR ADDED HEIGHT.
12. PREFABRICATED WASHOUT CONTAINERS AND/OR SELF-INSTALLED WASHOUTS MAY BE USED IN LIEU OF COMPOST FILTER SOCK WASHOUTS AS NECESSARY PREFABRICATED WASHOUT CONTAINERS AND SELF-INSTALLED WASHOUTS SHALL BE INSTALLED AND OPERATED IN ACCORDANCE OF THE PADEP EROSION AND SEDIMENT POLLUTION CONTROL PROGRAM MANUAL (MARCH 2012).

FILTER SOCK CONCRETE WASHOUT
NOT TO SCALE

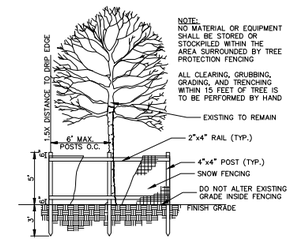

TREE PROTECTION
NOT TO SCALE

CUBIC YARDS OF TOPSOIL REQUIRED FOR APPLICATION TO VARIOUS DEPTHS

DEPTH (IN.)	PER 1,000 SQUARE FEET	PER ACRE
1	3.1	134
2	6.2	268
3	9.3	403
4	12.4	537
5	15.5	672
6	18.6	806
7	21.7	940
8	24.8	1,074

TOPSOIL NOTES:
1. GRADED AREAS SHOULD BE SCARIFIED OR OTHERWISE LOOSENED TO A DEPTH OF 3 TO 5 INCHES TO PERMIT BONDING OF THE TOPSOIL TO THE SURFACE AREAS AND TO PROVIDE A ROUGHENED SURFACE TO PREVENT TOPSOIL FROM SLIDING DOWN SLOPE.
2. TOPSOIL SHOULD BE UNIFORMLY DISTRIBUTED ACROSS THE DISTURBED AREA TO A DEPTH OF 4 TO 8 INCHES MINIMUM -- 2 INCHES ON FILL OUTSLOPES. SPREADING SHOULD BE DONE IN SUCH A MANNER THAT SODDING OR SEEDING CAN PROCEED WITH A MINIMUM OF ADDITIONAL PREPARATION OR TILLAGE. IRREGULARITIES IN THE SURFACE RESULTING FROM TOPSOIL PLACEMENT SHOULD BE CORRECTED IN ORDER TO PREVENT FORMATION OF DEPRESSIONS UNLESS SUCH DEPRESSIONS ARE PART OF THE PCSM PLAN.
3. TOPSOIL SHOULD NOT BE PLACED WHILE THE TOPSOIL OR SUBSOIL IS IN A FROZEN OR MUDDY CONDITION, WHEN THE SUBSOIL IS EXCESSIVELY WET, OR IN A CONDITION THAT MAY OTHERWISE BE DETRIMENTAL TO PROPER GRADING AND SEEDBED PREPARATION. COMPACTED SOILS SHOULD BE SCARIFIED 6 TO 12 INCHES ALONG CONTOUR WHEREVER POSSIBLE PRIOR TO SEEDING.

TOPSOIL SPECIFICATIONS
NOT TO SCALE

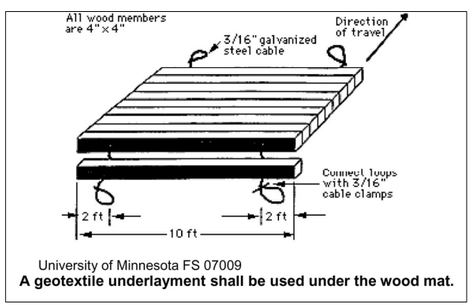

TYPICAL WOOD MAT FOR WETLAND CROSSING OR ACCESS ROUTE
NOT TO SCALE

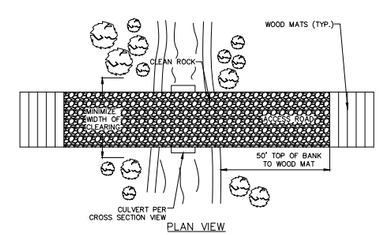

NOTES:

FOLLOW PERMIT CONDITIONS REGARDING REMOVAL OF CROSSING.

INSTALLATION TO OCCUR DURING DRY WEATHER ONLY

TEMPORARY STREAM CROSSING - PLAN VIEW
NOT TO SCALE

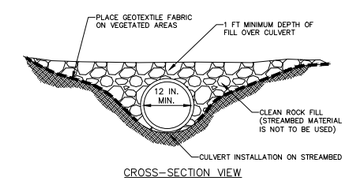

NOTES:

PROVIDE 50' STABILIZED ACCESS TO CROSSING ON BOTH SIDES OF STREAM CHANNEL (SEE STANDARD CONSTRUCTION DETAIL #3-12).

PIPES SHALL EXTEND BEYOND THE TOE OF THE ROADWAY.

RUNOFF FROM THE ROADWAY SHALL BE DIVERTED OFF THE ROADWAY AND INTO A SEDIMENT REMOVAL BMP BEFORE IT REACHES THE ROCK APPROACH TO THE CROSSING.

MAINTENANCE

1. TEMPORARY STREAM CROSSINGS SHALL BE INSPECTED ON A DAILY BASIS.
2. DAMAGED CROSSINGS SHALL BE REPAIRED WITHIN 24 HOURS OF THE INSPECTION AND BEFORE ANY SUBSEQUENT USE.
3. SEDIMENT DEPOSITS ON THE CROSSING OR ITS APPROACHES SHALL BE REMOVED WITHIN 24 HOURS OF THE INSPECTION.

AS SOON AS THE TEMPORARY CROSSING IS NO LONGER NEEDED, IT SHALL BE REMOVED. ALL MATERIALS SHALL BE DISPOSED OF PROPERLY AND DISTURBED AREAS STABILIZED.

TEMPORARY STREAM CROSSING - SECTION VIEW
NOT TO SCALE

CONFIDENTIAL
THESE DESIGNS AND DRAWINGS ARE CONFIDENTIAL & ARE THE EXCLUSIVE PROPERTY OF: NV5, INC., PHILADELPHIA, PENNSYLVANIA. NO COPY OR REPRODUCTION MAY BE MADE WITHOUT WRITTEN APPROVAL.

ADELPHIA GATEWAY

COMMONWEALTH OF PENNSYLVANIA
REGISTERED PROFESSIONAL
MICHAEL JAMES CONNOR
ENGINEER
No. 078570-E

DATE: 10/25/18

REV	DESCRIPTION	CHK	DATE	APP	DATE

REVISION

DRAWN BY	DB	10/25/18
DESIGNED BY	ML	10/25/18
CHECKED BY	MC	10/25/18
APPROVED BY	RH	
NV5 JOB NO.	27317-0000050	
PLOT SCALE		
MODEL ID		

NV5, Inc.
1315 Walnut Street, Suite 900
Philadelphia, PA 19107
T: 215-751-1133

EROSION & SEDIMENT CONTROL PLAN DETAILS
SHEET 2 OF 2

SCALE	DRAWING NUMBER	REV
N/A	ES-7	

TRUE NORTH

GP11: Temporary and Permanent Disturbance

GP111518315 wetland

GP8: Temporary Road Crossing

SITE SPECIFIC BOUNDARY
AREA OF DISTURBANCE
=3,455 SF

PLACE STOCKPILE ON GEOTEXTILE FABRIC

NORTHERN LIMITS OF WETLAND NOT DELINEATED

COMPOST SOCK SEDIMENT TRAP FOR WASH RACK COLLECTION

PROPOSED VALVE LOCATION

LIMITS OF WETLAND DELINEATION

CHAPTER 105 REGULATED LOCATION

15' WIDE ROCK CONSTRUCTION ENTRANCE WITH WASH RACK

LIMITS OF WETLAND DELINEATION

100-YEAR FLOOD PLAIN LIMIT (FIRM PANEL 42029C0215G)

RIDLEY CREEK (HQ-TSF)

RIDLEY CREEK

PAOLI PIKE (S.R. 2014)

EXISTING 30' EASEMENT

SEWER MH

GRASS

FLOW

LEGEND

324	EXISTING 1' CONTOUR
325	EXISTING 5' CONTOUR
324	PROPOSED 1' CONTOUR
325	PROPOSED 5' CONTOUR
	EXISTING TREE LINE
X	EXISTING FENCE LINE
E	EXISTING OVERHEAD ELECTRIC
	EXISTING UTILITY POLE
W	EXISTING WATER LINE
G	EXISTING GAS LINE
	EXISTING EASEMENT
PL	EXISTING PROPERTY LINE
WL	EXISTING WETLAND BOUNDARY
	EXISTING WETLAND AREA
	100-YEAR FLOOD PLAIN
	SOIL BOUNDARY
We	SOIL TYPE
	LIMIT OF DISTURBANCE/ PERMIT BOUNDARY
	CHAPTER 105 REGULATED LOCATION
	WOOD MATS
	ROCK CONSTRUCTION ENTRANCE
	EROSION CONTROL BLANKET
	INLET PROTECTION
	TREE PROTECTION
FS	COMPOST FILTER SOCK (12" DIA.)
FS 18"	COMPOST FILTER SOCK (18" DIA.)
FS 24"	COMPOST FILTER SOCK (24" DIA.)
	PROPOSED VALVE LOCATION

Revised Submission - 1/18/2019
GP111518315

NOTES

1. PIPELINE AND EASEMENT LOCATION PROVIDED BY INTERSTATE ENERGY COMPANY.
2. SEE SHEET 5 FOR GENERAL NOTES, NOTE 2 FOR SOURCE DATA REFERENCES FOR SOILS, FLOODWAYS, CONTOURS, AND MAPPING.

LOCATION MAP

NOT TO SCALE

CONFIDENTIAL

THESE DESIGNS AND DRAWINGS ARE CONFIDENTIAL & ARE THE EXCLUSIVE PROPERTY OF: NV5, INC., PHILADELPHIA, PENNSYLVANIA. NO COPY OR REPRODUCTION MAY BE MADE WITHOUT WRITTEN APPROVAL.

ADELPHIA GATEWAY

COMMONWEALTH OF PENNSYLVANIA
REGISTERED PROFESSIONAL
MICHAEL JAMES CONNOR
ENGINEER
No. 078575-E

10 0 20 40
SCALE: 1"= 20'

DATE: 10/25/18

REV	DESCRIPTION	CHK	DATE	APP	DATE

REVISION

DRAWN BY	DB	10/25/18
DESIGNED BY	ML	10/25/18
CHECKED BY	MC	10/25/18
APPROVED BY	RH	
NV5 JOB NO.	27317-0000050	
PLOT SCALE		
MODEL ID		

NV5

NV5, Inc.
1315 Walnut Street, Suite 900
Philadelphia, PA 19107
T: 215-751-1133

EROSION & SEDIMENT CONTROL PLAN
PAOLI PIKE BLOWDOWN
GP 111518315 E&S Drawing
CHESTER COUNTY

SCALE	DRAWING NUMBER	REV
1"=20'	ES-12	

D-8: PNDI Search Receipt and Clearance Letters

PNDI Search Receipt and Clearance Letters

Adelphia submitted its PNDI consultations manually (i.e., via U.S. Postal Service, not online); therefore, there is no PNDI receipt. Attached are the agencies' responses to the PNDI request.

Pennsylvania Natural Diversity Inventory
MANUAL PROJECT SUBMISSION FORM

This form provides site information necessary to perform an Environmental Review for special concern species and resources listed under the Endangered Species Act of 1973, the Wild Resource Conservation Act, the Pennsylvania Fish and Boat Code or the Pennsylvania Game and Wildlife Code.

Applicant Information

Name: Interstate Energy Company
Address: 214 Shoemaker Road, Pottstown, PA
Phone Number: 610-327-5325 Email:info@ie c.energy.com

Contact Person Information - if different from applicant

Name: Sara Holmes (NV5)
Address: 813 N. Dupont St., Wilmington, DE 19805
Phone Number: 727-565-9895
Email: sara.holmes@nv5.com

Project Information

Project Name: IEC Pipeline Modification Project
Project Reference Point: Latitude:40°19'4.92"N Longitude: 75°24'43.90"W Datum: WGS84
Municipality: Upper Salford Township County: Montgomery
☐ Attach a portion of a U.S.G.S. 7 ½ Minute Quadrangle Map with Project Boundaries clearly marked.
U.S.G.S. Quad Name:
Provide GIS shapefiles showing the project boundary (strongly recommended)

Project Description

Proposed Project Activity (including ALL earth disturbance areas and current conditions) See cover letter.

Total Acres of Property: 48.2 Acreage to be Impacted: 13.0

1. Will the entire project occur in or on an existing building, parking lot, driveway, road, maintained road shoulder, street, runway, paved area, railroad bed, or maintained lawn? Yes ☐ N ☒
2. Are there any waterways or waterbodies (intermittent or perennial rivers, streams, creeks, tributaries, lakes or ponds) in or near the project area, or on the land parcel? If so, how many feet away is the project?
   Yes ☐ No ☒
3. Are wetlands located in or within 300 feet of the project area? Yes ☒ If No, is this the result of a wetland delineation? Yes. Wetland data are attached.
4. How many acres of tree removal, tree cutting or forest clearing will be necessary to implement all aspects of this project? 0.0

Dept. of Conservation and Natural Resources
Bureau of Forestry, Ecological Services Section
400 Market St., PO Box 8552
Harrisburg, PA 17105
Email: RA-HERITAGEREVIEW@state.pa.us
fax: 717-772-0271

PA Game Commission
Bureau of Wildlife Habitat Management
Division of Environmental Planning & Habitat Protection
2001 Elmerton Avenue
Harrisburg, PA 17110-9797
RA-PGC_PNDI@pa.gov

PA Fish and Boat Commission
Natural Diversity Section
450 Robinson Lane
Bellefonte, PA 16823
Email: RA-FBPACENOTIFY@pa.gov

US Fish and Wildlife Service
Pennsylvania Field Office
110 Radnor Rd; Suite 101
State College, PA 16801
no faxes please

Katie Shafer

From: Sara Holmes
Sent: Thursday, September 13, 2018 11:09 AM
To: Katie Shafer
Subject: FW: Another PNDI Receipt Question

Sara Holmes | Environmental Compliance Program Specialist | FERC Permitting Project Manager | **NV5**
1315 Walnut St., Suite 900 | Philadelphia, PA 19107 | C: 727.565.9895

Electronic Communications Disclaimer

From: Dewar, Nathaniel [mailto:c-ndewar@pa.gov]
Sent: Tuesday, July 10, 2018 2:38 PM
To: Sara Holmes <Sara.Holmes@nv5.com>
Subject: RE: Another PNDI Receipt Question

Hi Sara,

Using the standard process, you would submit the agency response letters with the permit application, in place of the PNDI receipt. So yes, the response letters will suffice.

Nathan

From: Sara Holmes [mailto:Sara.Holmes@nv5.com]
Sent: Tuesday, July 10, 2018 2:26 PM
To: Dewar, Nathaniel <c-ndewar@pa.gov>
Subject: Another PNDI Receipt Question

Hi, Nathan –

I have another PNDI receipt question that I'm hoping you can help me with. Some PADEP Chapter 105 permit applications state that "*PNDI reviews can still be obtained… using the standard process of requesting a project review directly from each jurisdictional agency….instead of generating a PNDI Receipt instantly through the PA Conservation Explorer.* ***The standard PNDI review process user is responsible for securing PNDI Receipts from each jurisdictional agency…. PNDI Receipts from each jurisdictional agency will be included with the application/registration package. The PNDI review is not complete or satisfied unless PNDI Receipts are included from all four jurisdictional agencies****…*".

In our earlier email you said that a receipt isn't available, bc I submitted the project manually (i.e., the standard process). What do I need to provide as a PNDI Receipt in my permit application? Will the response letters from the agencies suffice?

Thanks in advance,
Sara

Sara Holmes | Environmental Compliance Program Specialist | FERC Permitting Project Manager | **NV5**
1315 Walnut St., Suite 900 | Philadelphia, PA 19107 | C: 727.565.9895

Electronic Communications Disclaimer

From: Dewar, Nathaniel [mailto:c-ndewar@pa.gov]
Sent: Monday, June 25, 2018 10:07 AM
To: Sara Holmes <Sara.Holmes@nv5.com>
Subject: RE: PNDI Receipt

Hi Sara,

That project was submitted as a manual project, so there is no available receipt. Your 'My Projects' only lists projects that you submitted online. Is there specific information you are looking for?

Nathan

From: Sara Holmes [mailto:Sara.Holmes@nv5.com]
Sent: Monday, June 25, 2018 9:54 AM
To: Dewar, Nathaniel <c-ndewar@pa.gov>
Subject: RE: PNDI Receipt

Hi, Nathaniel - the PNDI number is 648586. Thanks for getting back to me so quickly.
Sara

Sara Holmes | Environmental Compliance Program Specialist | FERC Permitting Project Manager | **NV5**
1315 Walnut St., Suite 900 | Philadelphia, PA 19107 | C: 727.565.9895

Electronic Communications Disclaimer

From: Dewar, Nathaniel [mailto:c-ndewar@pa.gov]
Sent: Monday, June 25, 2018 9:52 AM
To: Sara Holmes <Sara.Holmes@nv5.com>
Subject: RE: PNDI Receipt

Hi Sara,

Do you have a PNDI number or a project name for the missing project?

Respectfully,
Nathan Dewar

Nathan Dewar | Natural Resource GIS Specialist II
PA Department of Conservation and Natural Resources
Pennsylvania Natural Heritage Program
Bureau of Forestry
400 Market Street | Harrisburg, PA 17105-8764
Phone: 717-214-7512 | Fax: 717-772-0271
E-Mail: c-ndewar@pa.gov

From: Sara Holmes [mailto:Sara.Holmes@nv5.com]
Sent: Monday, June 25, 2018 9:47 AM
To: NR, HeritageGIS <RA-HeritageGIS@pa.gov>
Subject: PNDI Receipt

Hello,
I'm trying to find a PNDI receipt for a project I consulted for through the PNDI system. Unfortunately, the project is not showing up in My Projects. Will you please advise?
Thank you,
Sara

Sara Holmes | Environmental Compliance Program Specialist | FERC Permitting Project Manager | **NV5**
1315 Walnut St., Suite 900 | Philadelphia, PA 19107 | C: 727.565.9895

Electronic Communications Disclaimer

pennsylvania
DEPARTMENT OF CONSERVATION AND NATURAL RESOURCES

BUREAU OF FORESTRY

January 31, 2018 **PNDI Number: 64858**

Sara Holmes
NV5
1315 Walnut Street, Suite 900
Philadelphia, PA 19107
Email: sara.holmes@nv5.com (hard copy will not follow)

Re: Mainline Valve and Blowdown Assembly Sites
Chester, Delaware and Montgomery Counties, PA

PADCNR PNDI Review Receipt Number for GP111518315

Dear Sara Holmes,

Thank you for the submission of the Pennsylvania Natural Diversity Inventory (PNDI) Environmental Review Receipt Number **648586** for review. PA Department of Conservation and Natural Resources screened this project for potential impacts to species and resources under DCNR's responsibility, which includes plants, terrestrial invertebrates, natural communities, and geologic features only.

No Impact Anticipated GP111518315

PNDI records indicate species or resources under DCNR's jurisdiction are located in the vicinity of the project. However, based on the information you submitted concerning the nature of the project, the immediate location, and our detailed resource information, DCNR has determined that no impact is likely. No further coordination with our agency is needed for this project.

DCNR recommends the following steps to help prevent the spread of invasive species:

- The area of disturbance should be minimized to the fullest extent that would allow for construction. This will help to lessen the area of soil and vegetation disturbance associated with this project.

- If possible, please clean boot treads, construction equipment, and vehicles thoroughly (especially the undercarriage and wheels) before they are brought on site. This will remove invasive plant seeds and invasive earthworms/cocoons that may have been picked up at other sites.

- Do not transport unsterilized leaves, mulch, compost, or soil to the site from another location. Avoid using seed mixes that include invasive plant species (e.g. crown vetch) to re-vegetate the area. Please also use weed-free straw or hay mixes when possible. More information about invasive species in Pennsylvania can be found at the following link: *http://www.dcnr.pa.gov/Conservation/WildPlants/InvasivePlants/Pages/default.aspx*

This response represents the most up-to-date review of the PNDI data files and is valid for two (2) years only. If project plans change or more information on listed or proposed species becomes available, our determination may be reconsidered. Should the proposed work continue beyond the period covered by this letter, please resubmit the project to this agency as an "Update" (including an updated PNDI receipt, project narrative and accurate map). As a reminder, this finding applies to potential impacts under DCNR's jurisdiction only. Visit the PNHP website for directions on contacting the Commonwealth's other resource agencies for environmental review.

Should you have any questions or concerns, please contact Jaci Braund, Ecological Information Specialist, by phone (717-214-3813) or via email (c-jbraund@pa.gov).

Sincerely

Greg Podniesinski, Section Chief
Natural Heritage Section

P.O. Box 8552, Harrisburg, PA 17015-8552 717-787-3444 (fax) 717-772-0271

An Equal Opportunity Employer dcnr.state.pa.us Printed on Recycled Paper

Pennsylvania Fish & Boat Commission

Division of Environmental Services
Natural Gas Section
595 E Rolling Ridge Dr.
Bellefonte, PA 16823

All highlighted text is associated with GP111518315

February 27, 2018

IN REPLY REFER TO
SIR# 48929

PFBC PNDI Review Receipt Number for GP111518315

NV5
Sara Holmes
813 N. Dupont Street
Wilmington, Delaware 19805

RE: Species Impact Review (SIR) – Rare, Candidate, Threatened and Endangered Species
PNDI Search No.
Adelphia Gateway Project
BUCKS County: - CHESTER County: - DELAWARE County: - MONTGOMERY County: - NORTHAMPTON County:

Dear Sara Holmes:

This responds to your inquiry about a Pennsylvania Natural Diversity Inventory (PNDI) Internet Database search "potential conflict" or a threatened and endangered species impact review. These projects are screened for potential conflicts with rare, candidate, threatened or endangered species under Pennsylvania Fish & Boat Commission jurisdiction (fish, reptiles, amphibians, aquatic invertebrates only) using the PNDI database and our own files. These species of special concern are listed under the Endangered Species Act of 1973, the Wild Resource Conservation Act, and the Pennsylvania Fish & Boat Code (Chapter 75), or the Wildlife Code.

Eastern Redbelly Turtle (*Pseudemys rubriventris*, Threatened)

The eastern redbelly turtle is one of Pennsylvania's largest native aquatic turtles. This turtle species is known to inhabit relatively large, deep streams, rivers, ponds, lakes, and marshes with permanent water and ample basking sites. Redbelly turtles are restricted to the southcentral and southeastern regions of the Commonwealth. The existence of this turtle species is threatened by habitat destruction, poor water quality and competition with aggressive non-native turtle species that share its range and habitat (e.g. red-eared slider, *Trachemys scripta elegans*).

Based on the review of this information and the proximity of the project to known element occurrences of the species of concern listed above, potential habitat could be present within the proposed disturbance area. Therefore, additional evaluations are necessary to confirm whether or not the project site contains habitat and to determine the potential for adverse impacts to this species. We request completion of a **habitat assessment** to characterize and determine if potential habitat exists within the vicinity of the

proposed project area. **This habitat assessment is requested for the following areas described in your project submittal:**

-Proposed Martins Creek Station Site;
-Existing Schuylkill River Mainline Valve Site;
-Existing French Creek Mainline Valve Site;
-Existing Pickering Creek Mainline Valve Site; and
-Existing Chester Creek Mainline Valve Site.

A qualified biologist, who possesses the necessary Scientific Collector's Permit issued by the Pennsylvania Fish and Boat Commission, must conduct this habitat assessment. A list of biologists recognized as qualified by the Pennsylvania Fish and Boat Commission to perform this assessment is enclosed.

Furthermore, additional locations were determined to have no impact to species of concern:

-Proposed Quakertown Compressor Station Site;
-Skippack Meter Station Site;
-Existing East Branch Perkiomen Creek Mainline Valve Site;
-Existing Perkiomen Creek Mainline Valve Site;
-Existing Cromby Station Mainline Valve Site;
-Existing Paoli Pike Mainline Valve Site; GP111518315
-Optional Mainline Valve Site near Springlawn Road;
-Optional Mainline Valve Site near Baltimore Pike;
-Proposed Parkway and Tilghman Laterals and associated above ground facilities;
-Proposed Marcus Hook Station Site and associated above ground facilities.

This response represents the most up-to-date summary of the PNDI data and our files and is valid for two (2) years from the date of this letter. An absence of recorded species information does not necessarily imply species absence. Our data files and the PNDI system are continuously being updated with species occurrence information. Should project plans change or additional information on listed or proposed species become available, this determination may be reconsidered, and consultation shall be re-initiated.

If you have any questions regarding this review, please contact Greg Lech at 610-847-8772 and refer to the SIR # 48929. Thank you for your cooperation and attention to this important matter of species conservation and habitat protection.

Sincerely,

Greg Lech
Natural Gas Section

GPL/dn

COMMONWEALTH OF PENNSYLVANIA
PENNSYLVANIA GAME COMMISSION
2001 Elmerton Avenue
Harrisburg, PA 17110-9797
Wildlife Habitat Management
717-787-6818

February 21, 2018 **PGC ID Number: 201706150601 - REVISION**

PCG PNDI Review Receipt Number for GP111518315

Ms. Sara Holmes
NV5
813 North Dupont Street
Wilmington, Delaware 19805
Sara.holmes@nv5.com

Re: *Interstate Energy Corporation* - IEC Pipeline Modification Project
PNDI Manual Project Submission
Various Townships, Northampton, Bucks, Montgomery, Chester and Delaware Counties, Pennsylvania

Dear Ms. Holmes,

Thank you for submitting your Pennsylvania Natural Diversity Inventory (PNDI) Large Project Environmental Review request. The Pennsylvania Game Commission (PGC) screened this project for potential impacts to species and resources of concern under PGC responsibility, which includes birds and mammals only.

Potential Impact Anticipated
PNDI records indicate species or resources of concern are located within the vicinity portions of the project. The PGC has received and thoroughly reviewed the information that you provided to this office, as well as PNDI data, and has determined that potential impacts to the following species may be associated with portions of your project:

Scientific Name	Common Name	PA Status
Falco peregrinus	Peregrine Falcon	ENDANGERED

According to the updated information provided, the project proponent is considering modifications to the existing pipeline system in various locations. The components that are now being considered and were provided for PNDI review are the Martin's Creek Terminal Site, Quakertown Station Site, Skippack Interconnect Site, Marcus Hook Laterals (which is comprised of the Parkway Lateral and Tilghman Lateral), Marcus Hook Station Site, and the Mainline Valve and Blowdown Assembly Sites (which includes the installation of 1 new mainline valve and 8 new blowdown assemblies).

Based on the PNDI review, information submitted concerning the nature of the project, the immediate location, and our detailed resource information, the PGC has determined that no impact

is likely for all of the Sites being considered except the Existing Cromby Station Mainline Valve Site which is included in the Mainline Valve and Blowdown Assembly Sites portion of the project. At this time, no further coordination with the PGC will be necessary for the portions of the project where impacts are not anticipated.

GP111518315

As previously stated, the PNDI review did reveal the presence of peregrine falcons within the vicinity of the Existing Cromby Station Mainline Valve Site. Therefore, the following measures should be implemented to avoid impacts to these species.

- *Peregrine falcons:* All project-related activities associated with the Existing Cromby Station Mainline Valve Site shall be completed between August 1 and February 14 to avoid impacts to the nesting pair. No project-related activities shall occur during nesting season, February 15 through July 31.

This response represents the most up-to-date summary of the PNDI data files and is valid for two (2) years from the date of this letter. An absence of recorded information does not necessarily imply actual conditions on site. Should project plans change or additional information on listed or proposed species become available, this determination may be reconsidered.

Should the proposed work continue beyond the period covered by this letter, please resubmit the project to this agency as an "Update" (including an updated PNDI receipt, project narrative and accurate map). If the proposed work has not changed and no additional information concerning listed species is found, the project will be cleared for PNDI requirements under this agency for two additional years.

This finding applies to impacts to birds and mammals only. To complete your review of state and federally-listed threatened and endangered species and species of special concern, please be sure that the U.S. Fish and Wildlife Service, the PA Department of Conservation and Natural Resources, and/or the PA Fish and Boat Commission have been contacted regarding this project as directed by the online PNDI ER Tool found at www.naturalheritage.state.pa.us.

Please be sure to include the above-referenced PGC ID Number on any future correspondence with the PGC regarding this project.

Sincerely,

Olivia A. Braun
Environmental Planner
Division of Environmental Planning & Habitat Protection
Bureau of Wildlife Habitat Management
Phone: 717-787-4250, Extension 3128
Fax: 717-787-6957
E-mail: Olbraun@pa.gov

A PNHP Partner

Pennsylvania Natural Heritage Program

OAB/oab

cc: Metz
Morgan
Boyd
Brauning
Gross
Barber
Librandi Mumma
H:\OIL&GAS_PNDI_Reviews\Southeast Region

United States Department of the Interior

FISH AND WILDLIFE SERVICE
Pennsylvania Field Office
110 Radnor Road, Suite 101
State College, Pennsylvania 16801-4850

May 7, 2019

Sara Holmes
NV5
1315 Walnut Street, Suite 900
Philadelphia, PA 19107

RE: USFWS Project #2017-1465
PNDI Review #multiple

USFWS PNDI Review Receipt Number for GP111518315

Dear Ms. Holmes:

This responds to your letters of August 17 and 18, 2018, which provided the U.S. Fish and Wildlife Service (Service) with information regarding the Adelphia Gateway project located in Northampton, Bucks, Montgomery, Chester, and Delaware Counties, Pennsylvania. The project area is within the known range of the bog turtle (*Clemmys muhlenbergii*), a species that is federally listed as threatened. The following comments are provided pursuant to the Endangered Species Act of 1973 (87 Stat. 884, as amended; 16 U.S.C. 1531 *et seq*.) to ensure the protection of endangered and threatened species.

To determine the potential effects of the proposed project on bog turtles and their habitat, Scott Angus, a recognized qualified bog turtle surveyor, conducted Phase 1 bog turtle habitat assessments in December 2017 and April 2018. According to the reports, wetlands extend to within 300 feet of the proposed limit of disturbance at five project locations. Following the methods described under "Bog Turtle Habitat Survey" (Phase 1 survey) of the Guidelines for Bog Turtle Surveys (revised April 2006), Mr. Angus determined that, the subject wetlands do not have the combination of soils, vegetation, and hydrology typical of habitat occupied by bog turtles in proximity to sites referred to as Schuylkill River Gate Blowdown, Perkiomen Gate Blowdown, and East Perkiomen Gate Blowdown. We concur with your habitat determinations and conclude that implementation of the proposed project will not affect the bog turtle at the above sites. Mr. Angus did identify, or presume, potential bog turtle habitat in proximity to two project sites referred to as Paoli Pike Gate Blowdown and Chester Creek Gate Blowdown discussed below.

GP111518315

Chester Creek Gate Blowdown

Due to limited property access, the Phase 1 bog turtle survey could not be completed in the entire wetland area. No direct wetland disturbance is proposed; however, if the species is present within about 300 feet of the limit of disturbance they may seasonally (April to October) utilize adjacent upland and stream habitats. Based on the on-site observations made and remote data, rather than conduct the surveys necessary to determine if bog turtles are present you propose to implement measures to avoid the risk of take[1] if the species is present, as described in the attachment to this letter.

Paoli Pike Gate Blowdown

Given the proximity of the project to known bog turtle occurrences in the watershed, and identified or presumed suitable habitat, wetlands and streams are likely to be used as a dispersal/travel corridor. To avoid the risk of take at this site and Chester Creek Gate Blowdown, you propose that project construction will either take place entirely between November 1 and March 31, when bog turtles are closer to their hibernation areas in wetland habitat or, if this time-of-year restriction cannot be implemented, a combination of searches for the species and exclusionary fencing. These measures are detailed in the attachment to this letter and agreed to in a May 6, 2019, electronic mail message to Robert Anderson of my staff.

With the implementation of either the time-of-year restriction or pre-construction survey, this project is not likely to adversely affect the bog turtle, or any other federally listed or proposed species. If you are unable to implement the time-of-year restriction or pre-construction survey, or project plans change, further consultation with the Service will be required, pursuant to the Endangered Species Act.

To avoid potential delays in reviewing your project, please use the above-referenced USFWS project tracking number in any future correspondence regarding this project.

If you have any questions regarding this matter, please contact Robert Anderson of my staff at 814-234-4090.

Sincerely,

Sonja Jahrsdoerfer

Sonja Jahrsdoerfer
Project Leader

[1] As defined in the Act, take means ". . . to harass, harm, pursue, hunt, shoot, wound, kill, trap, capture, or collect, or attempt to engage in any such conduct." "Harm" in the definition of take means an act which kills or injures wildlife. Such act may include significant habitat modification or degradation that results in death or injury to listed species by significantly impairing essential behavioral patterns, including breeding, feeding or sheltering (50 CFR part 17.3).

Preconstruction Survey Bog Turtle Avoidance Measures

The following are bog turtle (*Clemmys* (*=Glyptemys) muhlenbergii*) habitat avoidance measures for work associated with construction at the Paoli Pike Gate Blowdown and Chester Creek Gate Blowdown in proximity to identified, or presumed, suitable bog turtle habitat where insufficient information is available to infer species absence. If all construction is completed between November 1 and March 31 and no excavation in wetland is proposed, the following measures are not necessary.

1) If the exclusionary fencing is entirely erected between November 1 and March 31, it will not be necessary to perform a pre-construction survey.

2) During the period between April 1 and October 31, one pre-construction bog turtle clearance search of the proposed project area of effect will be completed prior to any earth disturbance activity, fencing installation, or other construction. Where survey access permission from landowners is granted, the search area will extend to include an area 10 feet beyond the planned Limit of Disturbance and any temporary staging areas. The search area will be limited to the Limit of Disturbance in areas where landowners have not granted survey permission. The pre-construction bog turtle clearance search must be performed by a qualified bog turtle biologist, who will be obtained from the most current list of "U.S. Fish and Wildlife Service and Pennsylvania Fish and Boat Commission Recognized Qualified Bog Turtle Surveyors." The bog turtle clearance search must be completed immediately prior to the installation of the habitat protection fence described below.

3) Except as otherwise noted within these avoidance measures, the pre-construction bog turtle clearance search shall be conducted according to the most current survey protocol provided by the U.S. Fish and Wildlife Service and the Pennsylvania Fish and Boat Commission. All Phase 2 survey procedures are applicable except that one pre-construction clearance search per wetland rather than the minimum of four searches per wetland shall be acceptable, and the time of year for performing the search has been extended.

4) If the pre-construction bog turtle clearance search occurs after June 15, herbaceous vegetation within the survey area shall be cut to a height of 4 to 6 inches prior to the survey in order to promote search effectiveness. Vegetation shall be cut using a hand-held trimmer/weed cutter and then carefully raked away from the area to be searched. The qualified surveyor shall conduct the vegetation clearing.

5) Immediately following the pre-construction bog turtle clearance search, a 30-inch high silt barrier fence shall be erected at the edge of the Limit of Disturbance as habitat protection fencing in accordance with the approved Erosion and Sediment Pollution Control Plan. The habitat protection fence shall be constructed in upland habitat between identified suitable bog turtle habitat and the limit of disturbance to deter bog turtles from circumventing the barrier. No other construction activities may begin until installation of this habitat protection fencing is completed. The habitat protection fence will act as a barrier to prevent possible bog turtles from migrating out of wetlands and waterways into the construction area and to prevent construction activity and sediment from entering the wetland and waterway. The habitat protection fencing will be installed as indicated as soon as practicable following the turtle

search and clearance by the qualified biologist. The fencing will be installed only after receiving approval to do so from the qualified bog turtle surveyor following completion of their site search for bog turtles.

6) Installation of all habitat protection fencing and silt barrier fence for erosion and sediment control shall be the responsibility of the contractor, and shall be installed and removed by hand. The qualified bog turtle surveyor shall be present during the erection of the habitat protection fence to ensure that it is properly installed at the correct location and depth. Immediately following the fence installation, it shall be inspected by the qualified bog turtle surveyor to ensure that no trench, which could act as a pit-fall trap to turtles, occurs on either side of the fencing. After installation, the habitat protection fence will be inspected and logged daily by the contractor to insure that no holes are present that turtles can crawl through. If at any time there are holes in the habitat protection fence, OR any turtle (alive, injured, or dead) is observed within the Limit of Disturbance, construction will stop immediately and Permit Condition 10 below will be followed.

7) All work associated with the project shall be conducted in accordance with the Erosion and Sediment Pollution Control Plan approved by the County Conservation District.

8) All equipment and machinery shall avoid wetland/watercourse habitat upstream and downstream of the proposed construction area. Orange construction fence will be installed to delineate these avoidance areas and will act as a visual warning to prevent construction equipment and personnel from entering and disturbing the potential bog turtle habitat outside the Limit of Disturbance. A qualified person such as an environmental inspector or wetland professional shall identify and clearly delineate all wetland areas for the contractors by either attaching orange construction fence onto the habitat protection fence or install it immediately in front of the habitat protection fence within the LOD.

9) No material shall be excavated, deposited, or positioned so as to lower the water table or impede the flow of water to any wetland areas; that is, implementation of the project shall not directly or indirectly affect the water quality and quantity of any wetland areas.

10) The Qualified Bog Turtle Surveyor shall forward the results of the pre-construction bog turtle survey in writing to the U.S. Fish and Wildlife Service and the Pennsylvania Fish and Boat Commission via mail, facsimile, or e-mail within 48 hours of installation of the habitat protection fence.

11) During construction, if any turtle is observed at a location outside the Limit of Disturbance and habitat protection fence, then construction may continue so long as there are no holes in the habitat protection fence. However, if any turtle (alive, injured, or dead) is observed at any time within the Limit of Disturbance, OR if a hole is observed in the habitat protection fence, then construction will cease immediately and the following steps will be taken:

    a. The contractor will immediately inform the pre-designated site manager who will immediately contact the qualified bog turtle surveyor. The site manager will then immediately implement the following measures:

b. If the turtle appears dead or immobile, the turtle will be left where it was initially observed. If the turtle appears to be mobile, efforts will be made to temporarily contain the turtle until the qualified bog turtle surveyor can take possession of it. Temporary containment will consist of placing the turtle in a thoroughly clean bucket that has a depth of more than 18 inches. Less than 1 inch of water should be placed in the bucket with the turtle to keep the animal cool and hydrated. The bucket should be placed in a quiet, well-shaded area, preferably within the wetland. The turtle should be handled as little as possible, and temporary containment must not exceed 6 hours.

c. The qualified bog turtle surveyor will identify the species of turtle found and document the location and condition of the turtle. The qualified bog turtle surveyor will also inspect the habitat protection fence and direct any repairs of the fence as needed. If there are holes in the habitat protection fence and/or the turtle is found to be a bog turtle, construction will not resume until the agency consultation procedures described herein are fully implemented, and the habitat protection fence is repaired to re-establish an effective turtle exclusion barrier.

d. If the qualified bog turtle surveyor identifies the turtle species as a bog turtle (*Clemmys* (*=Glyptemys) muhlenbergii*), then this biologist will immediately notify endangered species biologists at <u>both</u> the U.S. Fish and Wildlife Service and the Pennsylvania Fish and Boat Commission. The elapsed time for contacting both of these jurisdictional agencies from the time of bog turtle discovery should be as soon as possible, but must not exceed 24 hours. Following arrival of the qualified bog turtle surveyor at the project site, the turtle may be handled only by this biologist according to the recommendations of the U.S. Fish and Wildlife Service and/or the Pennsylvania Fish and Boat Commission. The biologist will consult with these agencies concerning safe handling and possible relocation of the turtle. Construction will resume only at the completion of this consultation.

e. If the qualified bog turtle surveyor identifies the turtle as a species other than the bog turtle, and the turtle appears healthy, then the qualified surveyor will mark the turtle for future identification and release it unharmed no more than 300 feet from the site of discovery to a safe location outside of the Limit of Disturbance. The site manager will be shown how and where to release the turtle if it is again found outside of the Limit of Disturbance. Construction may continue once the turtle is relocated. The site manager must log all turtle relocations.

f. If any turtle found appears injured or dead, consult with the U.S. Fish and Wildlife Service and/or the Pennsylvania Fish and Boat Commission concerning safe handling of an injured turtle, and the taking of possession of the specimen, whether injured or dead, by one of the jurisdictional agencies. Only the qualified bog turtle surveyor will handle the turtle. Construction will resume only at the completion of consultation.

12) The contractor will remove the habitat protection fencing and all silt barrier fencing by hand immediately upon completion of all construction activities, including stabilization of earth disturbance areas.

13) The project proponent, or designated representative(s), will submit a brief final report including bog turtle survey results and a summary of the field construction completed, including color photographs, to the U.S. Fish and Wildlife Service and the Pennsylvania Fish and Boat Commission. The final report will be submitted within 30 days after construction is completed and the habitat protection fencing is removed.

D-9: Wetland Delineation Report

Wetland and Waterbody Identification and Delineation Report

Supplemental

Adelphia Gateway, LLC

Adelphia Gateway Project

Pennsylvania

Prepared by:

NV5

200 S Park Rd #350

Hollywood, FL 33021

June 2018

Table of Contents

1.0 Project Description 3
2.0 Regulatory Overview 3
3.0 Records Research 4
4.0 Survey Area 5
5.0 Survey Findings 6
6.0 References 8

List of Appendices

Appendix A - Figures 9
Appendix B - Datasheets 10
Appendix C - Photolog 11

This Wetland and Waterbody Identification and Delineation Report is a supplement to the Adelphia Gateway Project (Project) Wetland and Waterbody Identification and Delineation Report dated December 2017 and has been prepared to further describe wetlands and waterbodies that may be affected by Adelphia Gateway, LLC's (Adelphia) proposed Project. The December 2017 Report covered wetland and waterbody evaluations at the following Project facilities: the Marcus Hook Compressor Station (Marcus Hook CS) and wareyard; portions of the Parkway Lateral; the Martins Creek Station; the Skippack Meter Station; portions of the Quakertown Compressor Station (Quakertown CS) and associated meter station; and portions of the Tilghman Lateral and its associated interconnects/meter stations. The specific Project facilities evaluated in this report are discussed in Section 4.0.

1.0 Project Description

Adelphia is proposing modifications to its existing natural gas and oil pipeline and associated facilities located in Delaware, Chester, Bucks, Montgomery, and Northampton Counties, Pennsylvania. The Project consists of the following primary components: the approximately 4.4-mile 20-inch Mainline; the approximately 84-mile 18-inch Mainline consisting of the Southern Segment and the Northern Segment that will both transport solely natural gas; two new compressor stations (the Marcus Hook CS and the Quakertown CS); two pipeline laterals, including an approximately 0.20-mile 16-inch pipeline lateral (the Parkway Lateral) and an approximately 4.5-mile 16-inch pipeline lateral (the Tilghman Lateral); four existing meter and regulator (M&R) facilities that do not require any modifications and accordingly do not have any environmental impacts for review in this resource report; eight new M&R facilities at receipt and delivery interconnects located along the 18-inch Mainline and the Laterals; eight new blowdowns located at existing mainline valves (MLV); two new MLVs; and use of an existing disturbed site located within the boundaries of the proposed Marcus Hook CS as a ware yard.

2.0 Regulatory Overview

As Adelphia's consultant, NV5, LLC (NV5) conducted site visits and field surveys on February 27th and 28th; March 1st; April 19th, 20th, and 21st; and May 25th of 2018 to identify and delineate the extent and location of jurisdictional waters and wetlands within the Project study area pursuant to Sections 404 and 401 of the Clean Water Act (CWA). Adelphia is continuing to identify and delineate wetlands and waterbodies that may be along and in proximity to the proposed Project. Section 404 regulates the discharge of dredged or fill material into waters of the United States (WOUS), including wetlands (EPA, no date), and Section 401 allows for individual states to grant or deny federally approved actions that would result in discharges to WOUS through the use of Water Quality Certifications (EPA, 2010). The identified wetlands would also be subject to Pennsylvania Department of Environmental of Environmental Protection Chapter 105

regulations. Chapter 105 includes regulations that govern waterbody obstructions and encroachments and includes the regulation of wetlands in the state of Pennsylvania.

The CWA defines WOUS as:

- all waters that are, were, or could be used in interstate or foreign commerce;
- all waters that cross state lines, including wetlands;
- all other waters such as intrastate lakes, rivers, streams (including intermittent streams), mudflats, sand flats, wetlands, sloughs, prairie potholes, wet meadows, playa lakes, or natural ponds, the use, degradation or destruction of which could affect interstate or foreign commerce;
- all impoundments of waters otherwise defined as WOUS;
- tributaries of WOUS;
- the territorial sea; and
- wetlands adjacent to WOUS (other than waters that are themselves wetlands).

Under the CWA, waste treatment systems and prior converted cropland are not considered to be WOUS (EPA, 2017).

The U.S. Environmental Protection Agency (EPA) and U.S. Army Corps of Engineers (USACE) use the 1987 USACE Wetlands Delineation Manual (Manual) to identify wetlands for the CWA Section 404 permit program. In the Manual, wetlands are defined as, "… those areas that are inundated or saturated by surface or ground water at a frequency and duration sufficient to support, and that under normal circumstances do support, a prevalence of vegetation typically adapted for life in saturated soil conditions." Wetlands generally include swamps, marshes, bogs (Environmental Laboratory, 1987). The Manual organizes the environmental characteristics of a potential wetland into three categories: soils, vegetation, and hydrology. The Manual contains criteria for each category. Using this approach, an area that meets all three criteria is considered a wetland (EPA, no date).

To address regional variation across wetlands in the U.S. that could affect the validity and usefulness of the Manual, the USACE also developed regional supplements to the Manual that provide delineation techniques specifically developed for a particular geographical region (Wakeley, 2002). The Project encompasses an area that is covered by one regional supplement to the Manual: the Eastern Mountains and Piedmont (USACE, no date). NV5 conducted wetland delineations in accordance with the methodologies in the Manual and applicable supplements.

3.0 Records Research

Prior to field surveys, NV5 reviewed 7.5-minute USGS topographic quadrangle maps, the U.S. Fish and Wildlife Service's National Wetlands Inventory (NWI) web-based Interactive

Mapper, the Pennsylvania Department of Environmental Protection's (PADEP) eMap database, Google Earth imagery, and the U.S. Department of Agriculture's Web Soil Survey to identify potential vernal pools, natural areas, areas with topographical configurations, mapped wetlands, and hydric soils, which may suggest the presence of wetlands and waterbodies.

Records research indicated potential palustrine emergent wetlands in the Paoli Pike Blowdown area. The desktop review did not identify any waterbodies crossed by the Project work areas evaluated. However, the research identified several waterbodies in proximity to the proposed work areas, and wetlands could potentially be present due to proximity.

4.0 Survey Area

NV5 conducted field surveys to verify the mappings and identify the presence of any regulated wetland and waterbody resources not identified during the records research. At field-identified features, NV5 collected GPS data, took representative photographs, and flagged features with high visibility flagging. NV5 conducted wetland and waterbody surveys at the following proposed Project sites:

- MLV 1
- Chester Creek Gate Blowdown
- Paoli Pike Gate Blowdown
- Pickering Creek Gate Blowdown
- French Creek Gate Blowdown
- Cromby Gate Blowdown
- Schuylkill River Gate Blowdown
- Perkiomen Creek Gate Blowdown
- East Perkiomen Gate Blowdown
- Quakertown CS Additional Temporary Workspace (ATWS)
- Transco Meter Station KISH Site

NV5 surveyed the aforementioned sites to the extent permitted by landowner access. Field teams evaluated all access roads and works spaces associated with the facilities listed above with the exception of any areas outside of the existing pipeline right-of-way (ROW) at blowdown and MLV sites, which were restricted due to property access constraints. NV5 has not completed wetland/waterbody surveys for the Parkway and Tilghman Laterals due to access constraints. NV5 will conduct surveys for the remaining portions of these sites upon access approval, and will file the results in a supplemental report. Access roads associated with the MLV sites and the

Quakertown CS ATWS did not require WOUS surveys, because they are pre-existing, paved/graveled roads.

5.0 Survey Findings

NV5 identified wetlands at five of the proposed Blowdown sites (Chester Creek Gate Blowdown, Paoli Pike Gate Blowdown, Schuylkill River Gate Blowdown, Perkiomen Creek Gate Blowdown, and East Perkiomen Gate Blowdown), the Quakertown CS ATWS, and the proposed Transco Meter Station KISH property. Adelphia modified the work areas at three of the of the five blowdown sites (the Chester Creek Gate, Schuylkill River Gate, and Perkiomen Gate Blowdowns) to avoid affecting the identified wetlands during construction and operation of the proposed Project. NV5 did not identify any wetlands at the MLV site. NV5 did not identify any waterbodies in the Project work areas area; however, they did document waterbodies in proximity to the Project area at the Perkiomen Creek Gate Blowdown, the East Perkiomen Gate Blowdown, the Schuylkill River Gate Blowdown, and the Chester Creek Gate Blowdown.

The five wetlands identified at the Blowdown sites were palustrine emergent (PEM) wetlands located within the maintained utility ROW. The wetland delineated at the Quakertown CS ATWS was also dominated by emergent vegetation; however, the wetland at this location also had a palustrine scrub shrub (PSS) component classifying it as a PEM/PSS wetland. The wetland located at the Transco Meter Station KISH site also contained areas of PEM and PSS wetland communities; however, palustrine forested (PFO) wetlands dominated the site. Table 1 summarizes the survey results. Appendix A contains figures of the identified wetlands and waterbodies, Appendix B provides the wetland datasheets, and Appendix C provides a photolog that includes representative photos of each of the surveyed Project sites.

Table 1. Wetlands Identified within the Adelphia Gateway Project Survey Area

Project Site	Wetland ID	Wetland Type	Dominant Vegetation			Hydric Soil Indicators	Hydrology Indicators	Impacts		
			Scientific Name	Common Name	Wetland Indicator Status			Temporary (ac)	Permanent (ac)	Access Road (ac)
Chester Creek Gate Blowdown (work area moved outside of wetland)	CC-W-01	PEM	*Phalaris arundinacea*	reed canarygrass	FACW	Dark surface, Depleted matrix	Saturation at surface, Water-stained leaves, Oxidized rhizospheres on living roots, Geomorphic position, Microtopographic relief	0.00	0.00	0.00
			Lysimachia nummularia	creeping jenny (also known as moneywort)	FACW					
			Carex annectens	yellowfruit sedge	FACW					
Paoli Pike Gate Blowdown	PP-W-01	PEM	*Carex stricta*	upright sedge	OBL	Depleted below dark surface, Thick dark surface, Depleted matrix	Saturation at surface, Water-stained leaves, Oxidized rhizospheres on living roots, water table at ground's surface, surface water 1" deep	0.10	0.04	0.00
			Juncus effusus	common rush	FACW					
			Symplocarpus foetidus	skunk cabbage	OBL					
Schuylkill River Gate Blowdown (work area moved outside of wetland)	SR-W-01	PEM	*Phalaris arundinacea*	reed canarygrass	FACW	Dark surface	Saturation at 6" below surface, Water-stained leaves, Drainage patters	0.00	0.00	0.00
			Ranunculus ficaria	fig buttercup	FAC					
Perkiomen Creek Gate Blowdown (work area moved outside of wetland)	PC-W-01	PEM	*Phalaris arundinacea*	reed canarygrass	FACW	Dark surface, Depleted matrix, Red parent material	Surface water 1" deep, Saturation at surface, True aquatic plants	0.00	0.00	0.40
East Perkiomen Gate Blowdown	EP-W-01	PEM	*Phalaris arundinacea*	reed canarygrass	FACW	Depleted matrix, Red parent material	Saturation at surface, Water-stained leaves, Drainage patterns.	0.003	0.005	0.00
Quakertown CS ATWS	QCS-W-01	PEM/PSS	*Andropogon gerardii*	big bluestem	FAC	Depleted matrix, Depleted dark surface	Saturation at surface, Surface water 2" deep, Drainage patterns	0.73	0.00	0.00
			Scirpus atrovirens	green bulrush	OBL					
			Microstegium vimineum	Nepalese browntop	FAC					
Transco Meter Station KISH site	TC-W -01	PEM/PSS /PFO	*Phragmites australus*	common reed	FACW	Dark surface, Thick dark surface	Saturation at surface, Surface water 3" deep, Drainage patterns, High water table, Water stained leaves	0.00	0.00	0.00
			Woodwardia areolate	netted chainfern	OBL					
			Alnus serrulata	smooth alder	FACW					
			Acer rubrum	red maple	FAC					
			Fraxinus pennsylvanica	green ash	FACW					

FAC = Facultative
FACW = Facultative Wetland
OBL = Obligate Wetland
PEM = Palustrine Emergent
PSS = Palustrine Scrub/Shrub
PFO = Palustrine Forested

6.0 References

Environmental Laboratory. (1987). "Corps of Engineers Wetlands Delineation Manual," Technical Report Y-87-1, U.S. Army Engineer Waterways Experiment Station, Vicksburg, MS.

University of New Hampshire (UNH). 2015. The Cowardin System of Wetland Classification (1979) and the National Wetlands Inventory (NWI). Available at: https://extension.unh.edu/resources/files/Resource001874_Rep2718.pdf.

U.S. Army Corps of Engineers (USACE). no date. Regional Supplements to Corps Delineation Manual. Available at: http://www.usace.army.mil/Missions/Civil-Works/Regulatory-Program-and-Permits/reg_supp/.

U.S Environmental Protection Agency (EPA). no date. Wetland Regulatory Authority. Fact Sheet. EPA843-F-04-001. Office of Water. Available at: https://www.epa.gov/sites/production/files/2015-03/documents/404_reg_authority_fact_sheet.pdf.

U.S Environmental Protection Agency (EPA). 2010. Clean Water Act Section 401. Water Quality Certification: A Water Quality Protection Tool for States and Tribes. Office of Wetlands, Oceans, and Watersheds. Available at: https://www.epa.gov/sites/production/files/2016-11/documents/cwa_401_handbook_2010.pdf.

U.S Environmental Protection Agency (EPA). 2017. Section 404 of the Clean Water Act. Definition of Waters of the United States Under the Clean Water Act. Available at: https://www.epa.gov/cwa-404/definition-waters-united-states-under-clean-water-act.

Wakeley, J. S. (2002). “Developing a ‘Regionalized’ Version of the Corps of Engineers Wetlands Delineation Manual: Issues and Recommendations,” ERDC/EL TR-02-20, U.S. Army Engineer Research and Development Center, Vicksburg, MS.

Appendix A - Figures

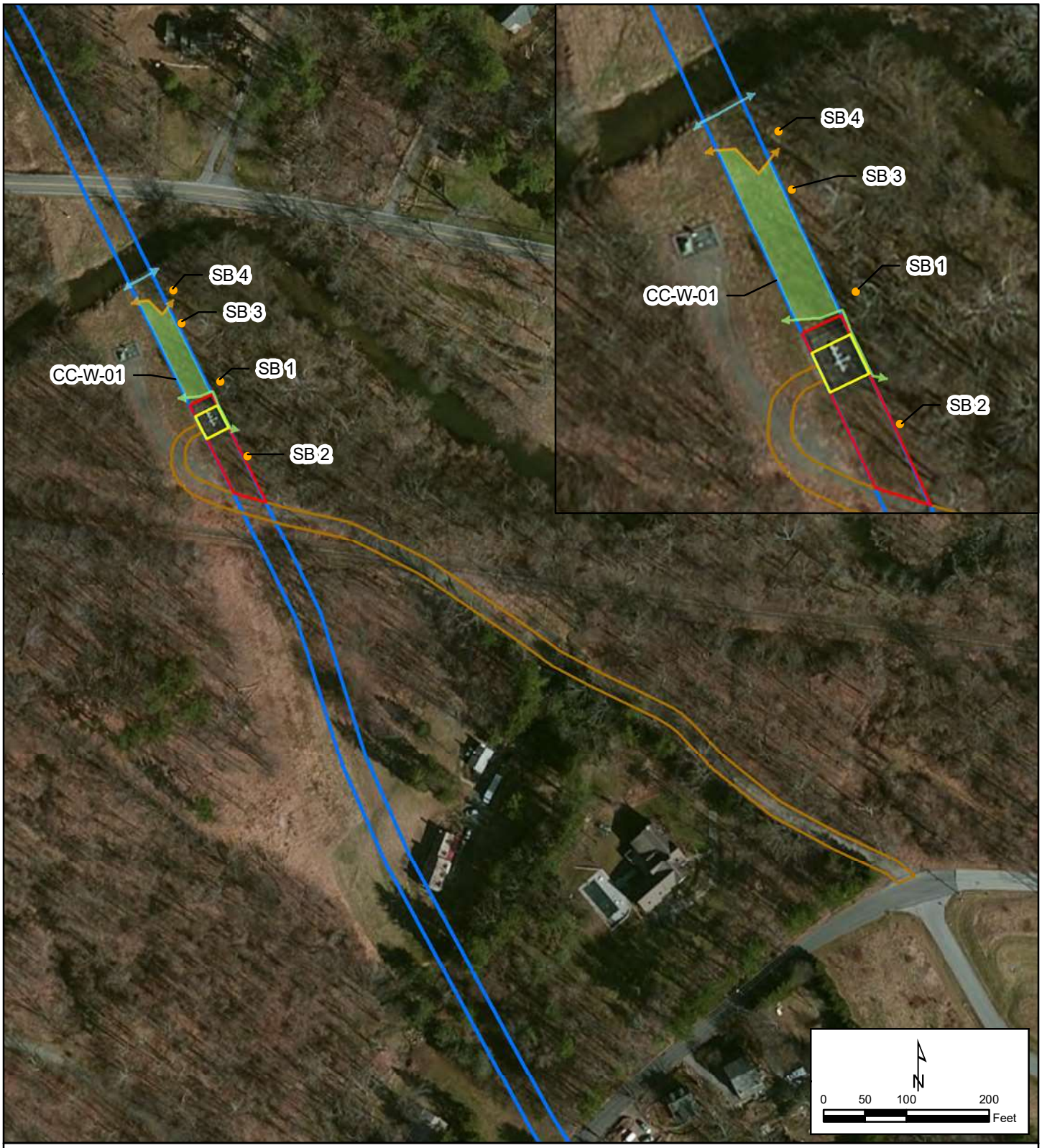

LEGEND

- Chester Creek MLV Site
- Chester Creek TWS
- Access Road
- Wetland Boundary
- Wetland Line
- Top of Bank
- Waterbody
- Soil Bore

NV5
www.NV5.com

						DRAWN BY	AO	6/22/2018
						DESIGNED BY	AO	6/22/2018
						CHECKED BY	XXX	XX/XX/18
						APPROVED BY	XXX	XX/XX/18
						NV5 JOB NO.	527317-0000050.00	
						PLOT SCALE	1:1	
						MODEL ID	XXXXXX	
REV	DESCRIPTION	CHK	DATE	APP	DATE			

Adelphia Gateway Project
Aerial Map Figure A1
Chester Creek Wetland
Delaware County, Pennsylvania

SCALE	DRAWING NUMBER	REV
AS SHOWN	527317_0000050_00_Figure_A1	2

6/22/2018 2:14:10 PM
ddelfrate

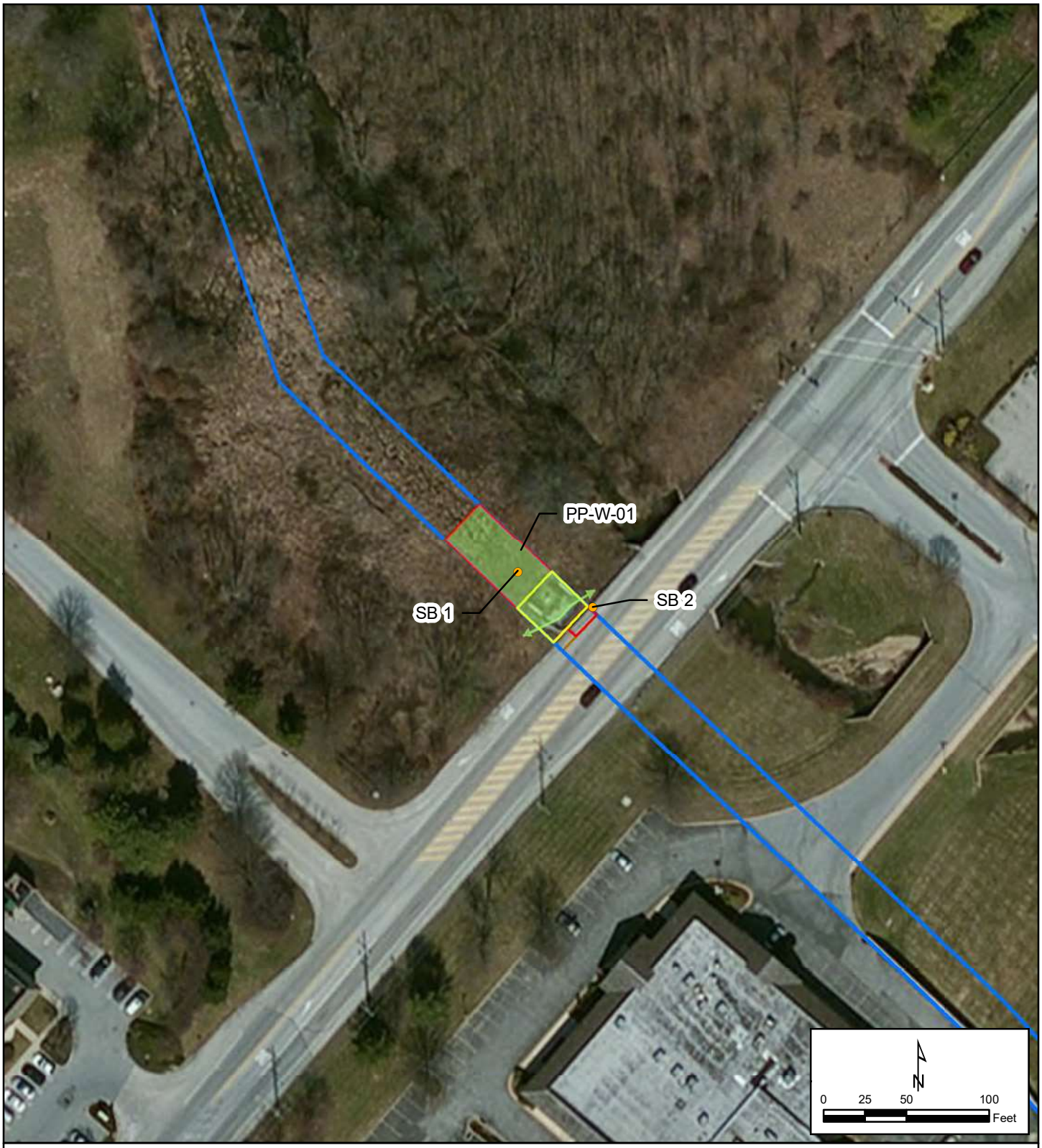

LEGEND

- Paoli Pike MLV Site
- Paoli Pike TWS
- Access Road
- ROW
- Wetland Boundary
- Wetland Line
- Soil Bore

NV5
www.NV5.com

						DRAWN BY	AO	6/22/2018
						DESIGNED BY	AO	6/22/2018
						CHECKED BY	XXX	XX/XX/18
						APPROVED BY	XXX	XX/XX/18
						NV5 JOB NO.	527317-0000050.00	
						PLOT SCALE	1:1	
						MODEL ID	XXXXXX	
REV	DESCRIPTION	CHK	DATE	APP	DATE			

Adelphia Gateway Project
Aerial Map Figure A2
Paoli Pike Wetland
Chester County, Pennsylvania

SCALE	DRAWING NUMBER	REV
AS SHOWN	527317_0000050_00_Figure_A2	1

ddelfrate 6/22/2018 2:00:54 PM

LEGEND

- Schuylkill River MLV Site
- Schuylkill River TWS
- Access Road
- ROW
- Wetland Boundary
- Wetland Line
- Waterbody
- Top of Bank
- Edge of Water
- Soil Bore

NV5
www.NV5.com

REV	DESCRIPTION	CHK	DATE	APP	DATE

DRAWN BY	AO	6/22/2018
DESIGNED BY	AO	6/22/2018
CHECKED BY	XXX	XX/XX/18
APPROVED BY	XXX	XX/XX/18
NV5 JOB NO.	527317-0000050.00	
PLOT SCALE	1:1	
MODEL ID	XXXXXX	

Adelphia Gateway Project
Aerial Map Figure A3
Schuylkill River Wetland
Chester County, Pennsylvania

SCALE	DRAWING NUMBER	REV
AS SHOWN	527317_0000050_00_Figure_A3	1

ddelfrate 6/22/2018 2:21:56 PM

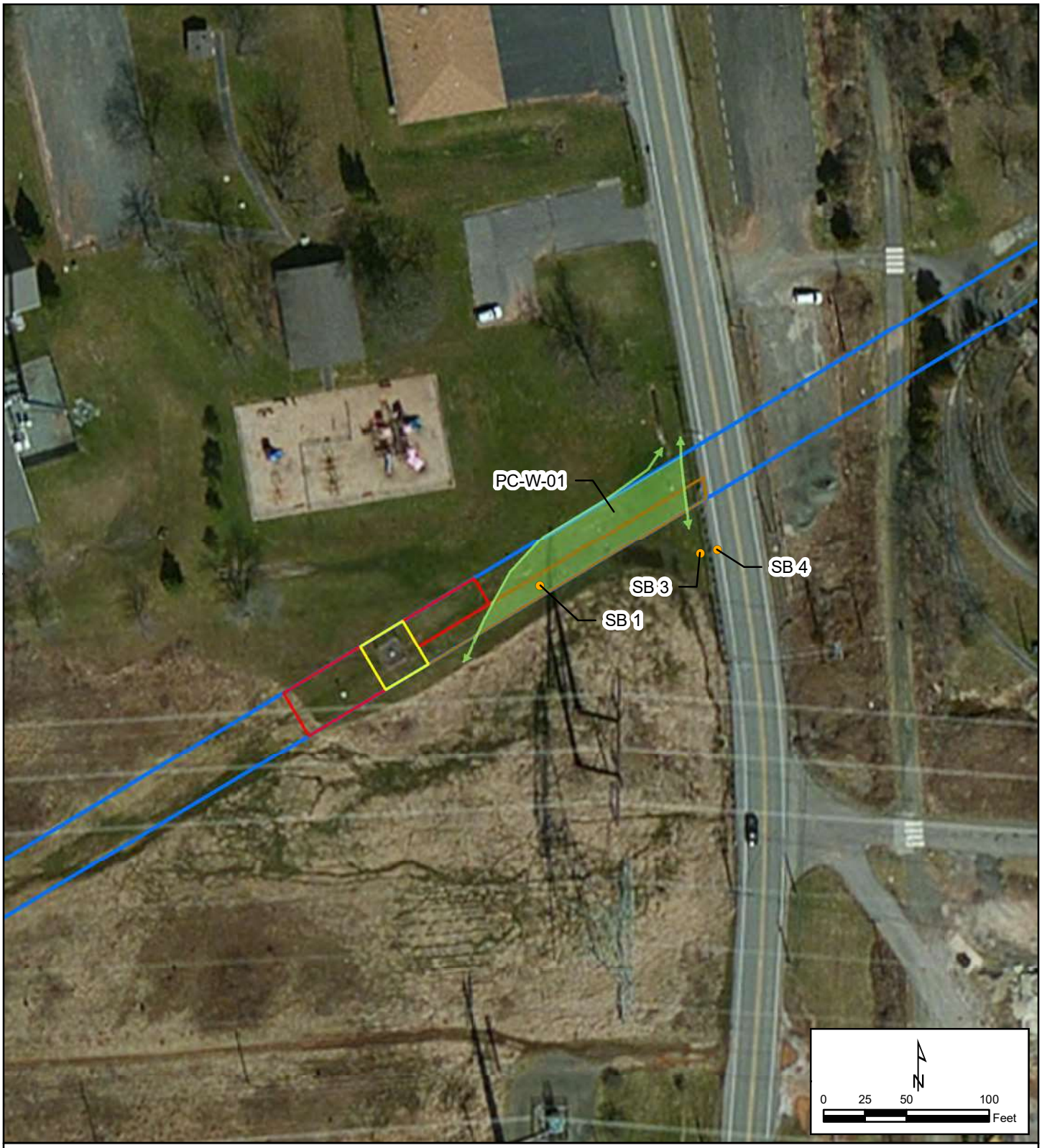

LEGEND

- Perkiomen MLV Site
- Perkiomen TWS
- Access Road
- ROW
- Wetland Boundary
- Wetland Line
- Soil Bore

NV5
www.NV5.com

						DRAWN BY	AO	6/22/2018
						DESIGNED BY	AO	6/22/2018
						CHECKED BY	XXX	XX/XX/18
						APPROVED BY	XXX	XX/XX/18
						NV5 JOB NO.	527317-0000050.00	
						PLOT SCALE	1:1	
						MODEL ID	XXXXXX	
REV	DESCRIPTION	CHK	DATE	APP	DATE			

Adelphia Gateway Project
Aerial Map Figure A4
Perkiomen Wetland
Montgomery County, Pennsylvania

SCALE	DRAWING NUMBER	REV
AS SHOWN	527317_0000050_00_Figure_A4	1

ddelfrate 6/22/2018 2:25:37 PM

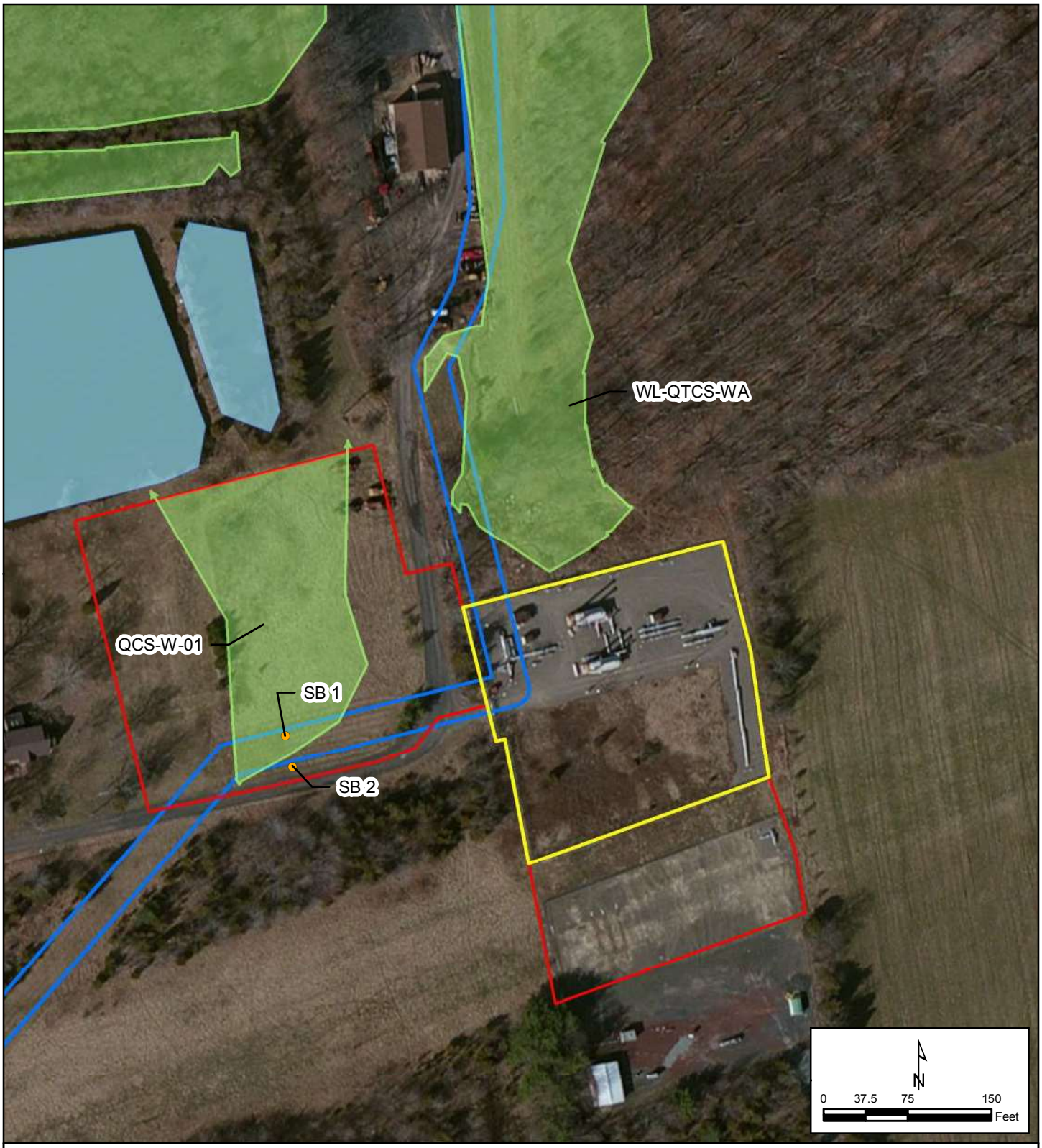

LEGEND

- Quakertown CS PE
- Quakertown CS TWS
- ROW
- Waterbody
- Wetland Boundary
- Wetland Line
- Soil Bore

NV5
www.NV5.com

REV	DESCRIPTION	CHK	DATE	APP	DATE

DRAWN BY	AO	6/27/2018
DESIGNED BY	AO	6/27/2018
CHECKED BY	XXX	XX/XX/18
APPROVED BY	XXX	XX/XX/18
NV5 JOB NO.	527317-0000050.00	
PLOT SCALE	1:1	
MODEL ID	XXXXXX	

Adelphia Gateway Project
Aerial Map Figure A5
Quakertown Wetland
Bucks County, Pennsylvania

SCALE	DRAWING NUMBER	REV
AS SHOWN	527317_0000050_00_Figure_A5	1

6/27/2018 8:51:41 AM
ddelfrate

LEGEND

- East Perkiomen MLV Site
- East Perkiomen TWS
- Access Road
- ROW
- Wetland Boundary
- Wetland Lines
- Soil Bore

NV5
www.NV5.com

						DRAWN BY	AO	6/22/2018
						DESIGNED BY	AO	6/22/2018
						CHECKED BY	XXX	XX/XX/18
						APPROVED BY	XXX	XX/XX/18
						NV5 JOB NO.	527317-0000050.00	
						PLOT SCALE	1:1	
						MODEL ID	XXXXXX	
REV	DESCRIPTION	CHK	DATE	APP	DATE			

Adelphia Gateway Project
Aerial Map Figure A6
East Perkiomen Wetland
Montgomery County, Pennsylvania

SCALE	DRAWING NUMBER	REV
AS SHOWN	527317_0000050_00_Figure_A6	1

ddelfrate 6/22/2018 3:00:34 PM

LEGEND

- TRANSCO PE
- TRANSCO TWS
- ROW
- Wetland Line
- Structure

NV5
www.NV5.com

REV	DESCRIPTION	CHK	DATE	APP	DATE

DRAWN BY	AO	6/22/2018
DESIGNED BY	AO	6/22/2018
CHECKED BY	XXX	XX/XX/18
APPROVED BY	XXX	XX/XX/18
NV5 JOB NO.	527317-0000050.00	
PLOT SCALE	1:1	
MODEL ID	XXXXXX	

Adelphia Gateway Project
Aerial Map Figure A7
Transco Wetland
Delaware County, Pennsylvania

SCALE	DRAWING NUMBER	REV
AS SHOWN	527317_0000050_00_Figure_A7	1

6/22/2018 1:50:29 PM
ddelfrate

Appendix B - Datasheets

WETLAND DETERMINATION DATA FORM – Eastern Mountains and Piedmont

Project/Site: Chester Creek Gate Blowdown City/County: Chester Sampling Date: 2/27/18

Applicant/Owner: Adelphia State: PA Sampling Point: DP1

Investigator(s): NV5- Scott Angus, Ethan Muller Section, Township, Range: Thornbury

Landform (hillslope, terrace, etc.): Floodplain Local relief (concave, convex, none): Concave Slope (%): 0

Subregion (LRR or MLRA): LRRS Lat: 39.931832º Long: -75.511167º Datum: ____

Soil Map Unit Name: We Wehadkee NWI classification: NA

Are climatic / hydrologic conditions on the site typical for this time of year? Yes ✓ No ___ (If no, explain in Remarks.)

Are Vegetation ✓, Soil ___, or Hydrology ___ significantly disturbed? Are "Normal Circumstances" present? Yes ___ No ✓

Are Vegetation ___, Soil ___, or Hydrology ___ naturally problematic? (If needed, explain any answers in Remarks.)

SUMMARY OF FINDINGS – Attach site map showing sampling point locations, transects, important features, etc.

Hydrophytic Vegetation Present?	Yes ✓	No ___	**Is the Sampled Area within a Wetland?** **Yes** ✓ **No** ___
Hydric Soil Present?	Yes ✓	No ___	
Wetland Hydrology Present?	Yes ✓	No ___	

Remarks:
Mowed vegetation within ROW.
CC-W-01

HYDROLOGY

Wetland Hydrology Indicators:

Primary Indicators (minimum of one is required; check all that apply)

- ___ Surface Water (A1)
- ___ High Water Table (A2)
- ✓ Saturation (A3)
- ___ Water Marks (B1)
- ___ Sediment Deposits (B2)
- ___ Drift Deposits (B3)
- ___ Algal Mat or Crust (B4)
- ___ Iron Deposits (B5)
- ___ Inundation Visible on Aerial Imagery (B7)
- ✓ Water-Stained Leaves (B9)
- ___ Aquatic Fauna (B13)
- ___ True Aquatic Plants (B14)
- ___ Hydrogen Sulfide Odor (C1)
- ✓ Oxidized Rhizospheres on Living Roots (C3)
- ___ Presence of Reduced Iron (C4)
- ___ Recent Iron Reduction in Tilled Soils (C6)
- ___ Thin Muck Surface (C7)
- ___ Other (Explain in Remarks)

Secondary Indicators (minimum of two required)

- ___ Surface Soil Cracks (B6)
- ___ Sparsely Vegetated Concave Surface (B8)
- ___ Drainage Patterns (B10)
- ___ Moss Trim Lines (B16)
- ___ Dry-Season Water Table (C2)
- ___ Crayfish Burrows (C8)
- ___ Saturation Visible on Aerial Imagery (C9)
- ___ Stunted or Stressed Plants (D1)
- ✓ Geomorphic Position (D2)
- ___ Shallow Aquitard (D3)
- ✓ Microtopographic Relief (D4)
- ___ FAC-Neutral Test (D5)

Field Observations:

Surface Water Present?	Yes ___	No ✓	Depth (inches): ____
Water Table Present?	Yes ___	No ✓	Depth (inches): ____
Saturation Present? (includes capillary fringe)	Yes ✓	No ___	Depth (inches): Surface

Wetland Hydrology Present? **Yes** ✓ **No** ___

Describe Recorded Data (stream gauge, monitoring well, aerial photos, previous inspections), if available:

Remarks:

VEGETATION (Four Strata) – Use scientific names of plants.

Sampling Point: DP1

Tree Stratum (Plot size: _____)	Absolute % Cover	Dominant Species?	Indicator Status
1.			
2.			
3.			
4.			
5.			
6.			
7.			
8.			
	0 = Total Cover		
50% of total cover: 0	20% of total cover: 0		

Sapling/Shrub Stratum (Plot size: _____)			
1.			
2.			
3.			
4.			
5.			
6.			
7.			
8.			
	0 = Total Cover		
50% of total cover: 0	20% of total cover: 0		

Herb Stratum (Plot size: _____)			
1. *Carex annectens*	20	Yes	FACW
2. *Juncus effusus*	10	No	FACW
3. *Lysimachia nummularia*	20	Yes	FACW
4. *Rosa multiflora*	5	No	FACU
5. *Phalaris arundinacea*	40	Yes	FACW
6. *Aster sp. (basal leaves)*	5	No	
7.			
8.			
9.			
10.			
11.			
12.			
	100 = Total Cover		
50% of total cover: 50	20% of total cover: 20		

Woody Vine Stratum (Plot size: _____)			
1.			
2.			
3.			
4.			
5.			
	0 = Total Cover		
50% of total cover: 0	20% of total cover: 0		

Dominance Test worksheet:

Number of Dominant Species That Are OBL, FACW, or FAC: 3 (A)

Total Number of Dominant Species Across All Strata: 3 (B)

Percent of Dominant Species That Are OBL, FACW, or FAC: 100.00 (A/B)

Prevalence Index worksheet:

Total % Cover of:		Multiply by:	
OBL species	0	x 1 =	0
FACW species	90	x 2 =	180
FAC species	0	x 3 =	0
FACU species	5	x 4 =	20
UPL species	0	x 5 =	0
Column Totals:	95 (A)		200 (B)

Prevalence Index = B/A = 2.11

Hydrophytic Vegetation Indicators:

✓ 1 - Rapid Test for Hydrophytic Vegetation

✓ 2 - Dominance Test is >50%

✓ 3 - Prevalence Index is ≤3.0[1]

___ Problematic Hydrophytic Vegetation[1] (Explain)

[1]Indicators of hydric soil and wetland hydrology must be present, unless disturbed or problematic.

Definitions of Four Vegetation Strata:

Tree – Woody plants, excluding vines, 3 in. (7.6 cm) or more in diameter at breast height (DBH), regardless of height.

Sapling/Shrub – Woody plants, excluding vines, less than 3 in. DBH and greater than 3.28 ft (1 m) tall.

Herb – All herbaceous (non-woody) plants, regardless of size, and woody plants less than 3.28 ft tall.

Woody vine – All woody vines greater than 3.28 ft in height.

Hydrophytic Vegetation Present? Yes ✓ No ____

Remarks: (If observed, list morphological adaptations below).

Slightly off maintained ROW - American Sycamore (Platanus occidentalis) saplings.

SOIL

Sampling Point: DP1

Profile Description: (Describe to the depth needed to document the indicator or confirm the absence of indicators.)

Depth (inches)	Matrix Color (moist)	Matrix %	Redox Features Color (moist)	Redox %	Type[1]	Loc[2]	Texture	Remarks
0-5	10YR 3/1	100					SL	
5-18	10YR 4/1	85	5YR 2.5/1	5	D	M	SL	
			7.5YR 5/8	5	C	PL	SL	
			2.5YR 4/6	5	D	PL	SL	

[1]Type: C=Concentration, D=Depletion, RM=Reduced Matrix, MS=Masked Sand Grains. [2]Location: PL=Pore Lining, M=Matrix.

Hydric Soil Indicators:

- ___ Histosol (A1)
- ___ Histic Epipedon (A2)
- ___ Black Histic (A3)
- ___ Hydrogen Sulfide (A4)
- ___ Stratified Layers (A5)
- ___ 2 cm Muck (A10) **(LRR N)**
- ___ Depleted Below Dark Surface (A11)
- ___ Thick Dark Surface (A12)
- ___ Sandy Mucky Mineral (S1) **(LRR N, MLRA 147, 148)**
- ___ Sandy Gleyed Matrix (S4)
- ___ Sandy Redox (S5)
- ___ Stripped Matrix (S6)
- ✓ Dark Surface (S7)
- ___ Polyvalue Below Surface (S8) **(MLRA 147, 148)**
- ___ Thin Dark Surface (S9) **(MLRA 147, 148)**
- ___ Loamy Gleyed Matrix (F2)
- ✓ Depleted Matrix (F3)
- ___ Redox Dark Surface (F6)
- ___ Depleted Dark Surface (F7)
- ___ Redox Depressions (F8)
- ___ Iron-Manganese Masses (F12) **(LRR N, MLRA 136)**
- ___ Umbric Surface (F13) **(MLRA 136, 122)**
- ___ Piedmont Floodplain Soils (F19) **(MLRA 148)**
- ___ Red Parent Material (F21) **(MLRA 127, 147)**

Indicators for Problematic Hydric Soils[3]:

- ___ 2 cm Muck (A10) **(MLRA 147)**
- ___ Coast Prairie Redox (A16) **(MLRA 147, 148)**
- ___ Piedmont Floodplain Soils (F19) **(MLRA 136, 147)**
- ___ Very Shallow Dark Surface (TF12)
- ___ Other (Explain in Remarks)

[3]Indicators of hydrophytic vegetation and wetland hydrology must be present, unless disturbed or problematic.

Restrictive Layer (if observed):

Type:

Depth (inches):

Hydric Soil Present? Yes ✓ No ☐

Remarks:

CC_SB1 in GPS

Feature Sketch: Indicate North, CL and Survey Corridor, Photo Locations Sampling Point: DP1

Feature Photo: Facing - __N __S __E __W __NE __NW __SE __SW

WETLAND DETERMINATION DATA FORM – Eastern Mountains and Piedmont

Project/Site: Chester Creek Gate Blowdown City/County: Chester Sampling Date: 2/27/18

Applicant/Owner: Adelphia State: PA Sampling Point: DP2

Investigator(s): NV5- Scott Angus, Ethan Muller Section, Township, Range: Thornbury

Landform (hillslope, terrace, etc.): Hillslope Local relief (concave, convex, none): None Slope (%): 7

Subregion (LRR or MLRA): LRRS Lat: 39.931581° Long: -75.511057° Datum: _____

Soil Map Unit Name: We Wehadkee NWI classification: NA

Are climatic / hydrologic conditions on the site typical for this time of year? Yes ✓ No ☐ (If no, explain in Remarks.)

Are Vegetation ✓, Soil _____, or Hydrology _____ significantly disturbed? Are "Normal Circumstances" present? Yes ☐ No ✓

Are Vegetation _____, Soil _____, or Hydrology _____ naturally problematic? (If needed, explain any answers in Remarks.)

SUMMARY OF FINDINGS – Attach site map showing sampling point locations, transects, important features, etc.

Hydrophytic Vegetation Present?	Yes ☐	No ✓	**Is the Sampled Area within a Wetland?** Yes ☐ No ✓
Hydric Soil Present?	Yes ☐	No ✓	
Wetland Hydrology Present?	Yes ☐	No ✓	

Remarks:

Mowed vegetation in ROW.

HYDROLOGY

Wetland Hydrology Indicators:

Primary Indicators (minimum of one is required; check all that apply)

- ___ Surface Water (A1)
- ___ High Water Table (A2)
- ___ Saturation (A3)
- ___ Water Marks (B1)
- ___ Sediment Deposits (B2)
- ___ Drift Deposits (B3)
- ___ Algal Mat or Crust (B4)
- ___ Iron Deposits (B5)
- ___ Inundation Visible on Aerial Imagery (B7)
- ___ Water-Stained Leaves (B9)
- ___ Aquatic Fauna (B13)
- ___ True Aquatic Plants (B14)
- ___ Hydrogen Sulfide Odor (C1)
- ___ Oxidized Rhizospheres on Living Roots (C3)
- ___ Presence of Reduced Iron (C4)
- ___ Recent Iron Reduction in Tilled Soils (C6)
- ___ Thin Muck Surface (C7)
- ___ Other (Explain in Remarks)

Secondary Indicators (minimum of two required)

- ___ Surface Soil Cracks (B6)
- ___ Sparsely Vegetated Concave Surface (B8)
- ___ Drainage Patterns (B10)
- ___ Moss Trim Lines (B16)
- ___ Dry-Season Water Table (C2)
- ___ Crayfish Burrows (C8)
- ___ Saturation Visible on Aerial Imagery (C9)
- ___ Stunted or Stressed Plants (D1)
- ___ Geomorphic Position (D2)
- ___ Shallow Aquitard (D3)
- ___ Microtopographic Relief (D4)
- ___ FAC-Neutral Test (D5)

Field Observations:

Surface Water Present?	Yes ☐	No ✓	Depth (inches): _____
Water Table Present?	Yes ☐	No ✓	Depth (inches): _____
Saturation Present? (includes capillary fringe)	Yes ☐	No ✓	Depth (inches): _____

Wetland Hydrology Present? Yes ☐ No ✓

Describe Recorded Data (stream gauge, monitoring well, aerial photos, previous inspections), if available:

Remarks:

No wetland hydrology indicators present.

VEGETATION (Four Strata) – Use scientific names of plants.

Sampling Point: DP2

Tree Stratum (Plot size: _____)	Absolute % Cover	Dominant Species?	Indicator Status
1.			
2.			
3.			
4.			
5.			
6.			
7.			
8.			
	0 = Total Cover		
50% of total cover: 0	20% of total cover: 0		

Sapling/Shrub Stratum (Plot size: _____)			
1.			
2.			
3.			
4.			
5.			
6.			
7.			
8.			
	0 = Total Cover		
50% of total cover: 0	20% of total cover: 0		

Herb Stratum (Plot size: _____)			
1. *Lonicera japonica*	20	Yes	FACU
2. *Schedonorus sp.*	60	Yes	
3. *Glechoma hederacea*	10	No	FACU
4. *Rosa multiflora*	10	No	FACU
5.			
6.			
7.			
8.			
9.			
10.			
11.			
12.			
	100 = Total Cover		
50% of total cover: 50	20% of total cover: 20		

Woody Vine Stratum (Plot size: _____)			
1.			
2.			
3.			
4.			
5.			
	0 = Total Cover		
50% of total cover: 0	20% of total cover: 0		

Dominance Test worksheet:

Number of Dominant Species That Are OBL, FACW, or FAC: 0 (A)

Total Number of Dominant Species Across All Strata: 2 (B)

Percent of Dominant Species That Are OBL, FACW, or FAC: 0.00 (A/B)

Prevalence Index worksheet:

Total % Cover of:		Multiply by:	
OBL species	0	x 1 =	0
FACW species	0	x 2 =	0
FAC species	0	x 3 =	0
FACU species	40	x 4 =	160
UPL species	0	x 5 =	0
Column Totals:	40 (A)		160 (B)

Prevalence Index = B/A = 4.00

Hydrophytic Vegetation Indicators:

___ 1 - Rapid Test for Hydrophytic Vegetation

___ 2 - Dominance Test is >50%

___ 3 - Prevalence Index is ≤3.0[1]

___ Problematic Hydrophytic Vegetation[1] (Explain)

[1]Indicators of hydric soil and wetland hydrology must be present, unless disturbed or problematic.

Definitions of Four Vegetation Strata:

Tree – Woody plants, excluding vines, 3 in. (7.6 cm) or more in diameter at breast height (DBH), regardless of height.

Sapling/Shrub – Woody plants, excluding vines, less than 3 in. DBH and greater than 3.28 ft (1 m) tall.

Herb – All herbaceous (non-woody) plants, regardless of size, and woody plants less than 3.28 ft tall.

Woody vine – All woody vines greater than 3.28 ft in height.

Hydrophytic Vegetation Present? **Yes** _____ **No** ✓

Remarks: (If observed, list morphological adaptations below).

SOIL

Sampling Point: DP2

Profile Description: (Describe to the depth needed to document the indicator or confirm the absence of indicators.)

Depth (inches)	Matrix Color (moist)	Matrix %	Redox Features Color (moist)	Redox %	Type[1]	Loc[2]	Texture	Remarks
0-6	10YR 4/4	100					L	
6-18	10YR 5/4	100					L	

[1]Type: C=Concentration, D=Depletion, RM=Reduced Matrix, MS=Masked Sand Grains. [2]Location: PL=Pore Lining, M=Matrix.

Hydric Soil Indicators:

___ Histosol (A1)
___ Histic Epipedon (A2)
___ Black Histic (A3)
___ Hydrogen Sulfide (A4)
___ Stratified Layers (A5)
___ 2 cm Muck (A10) **(LRR N)**
___ Depleted Below Dark Surface (A11)
___ Thick Dark Surface (A12)
___ Sandy Mucky Mineral (S1) **(LRR N, MLRA 147, 148)**
___ Sandy Gleyed Matrix (S4)
___ Sandy Redox (S5)
___ Stripped Matrix (S6)
___ Dark Surface (S7)
___ Polyvalue Below Surface (S8) **(MLRA 147, 148)**
___ Thin Dark Surface (S9) **(MLRA 147, 148)**
___ Loamy Gleyed Matrix (F2)
___ Depleted Matrix (F3)
___ Redox Dark Surface (F6)
___ Depleted Dark Surface (F7)
___ Redox Depressions (F8)
___ Iron-Manganese Masses (F12) **(LRR N, MLRA 136)**
___ Umbric Surface (F13) **(MLRA 136, 122)**
___ Piedmont Floodplain Soils (F19) **(MLRA 148)**
___ Red Parent Material (F21) **(MLRA 127, 147)**

Indicators for Problematic Hydric Soils[3]:

___ 2 cm Muck (A10) **(MLRA 147)**
___ Coast Prairie Redox (A16) **(MLRA 147, 148)**
___ Piedmont Floodplain Soils (F19) **(MLRA 136, 147)**
___ Very Shallow Dark Surface (TF12)
___ Other (Explain in Remarks)

[3]Indicators of hydrophytic vegetation and wetland hydrology must be present, unless disturbed or problematic.

Restrictive Layer (if observed):

Type:

Depth (inches):

Hydric Soil Present? **Yes** ☐ **No** ☑

Remarks:

CC_SB2 in GPS

Feature Sketch: Indicate North, CL and Survey Corridor, Photo Locations

Sampling Point: DP2

Feature Photo: Facing - __N __S __E __W __NE __NW __SE __SW

WETLAND DETERMINATION DATA FORM – Eastern Mountains and Piedmont

Project/Site: Chester Creek Gate Blowdown City/County: Chester Sampling Date: 2/27/18

Applicant/Owner: Adelphia State: PA Sampling Point: DP3

Investigator(s): NV5- Scott Angus, Ethan Muller Section, Township, Range: Thornbury

Landform (hillslope, terrace, etc.): Floodplain Local relief (concave, convex, none): Concave Slope (%): 0

Subregion (LRR or MLRA): LRRS Lat: 39.932027º Long: -75.511326º Datum: ____

Soil Map Unit Name: We Wehadkee NWI classification: NA

Are climatic / hydrologic conditions on the site typical for this time of year? Yes ✓ No ___ (If no, explain in Remarks.)

Are Vegetation ✓, Soil ___, or Hydrology ___ significantly disturbed? Are "Normal Circumstances" present? Yes ___ No ✓

Are Vegetation ___, Soil ___, or Hydrology ___ naturally problematic? (If needed, explain any answers in Remarks.)

SUMMARY OF FINDINGS – Attach site map showing sampling point locations, transects, important features, etc.

Hydrophytic Vegetation Present?	Yes ✓	No ___	**Is the Sampled Area within a Wetland?** **Yes** ✓ **No** ___
Hydric Soil Present?	Yes ✓	No ___	
Wetland Hydrology Present?	Yes ✓	No ___	

Remarks:
Mowed vegetation in ROW.
CC-W-01

HYDROLOGY

Wetland Hydrology Indicators:

Primary Indicators (minimum of one is required; check all that apply)

- ___ Surface Water (A1)
- ___ High Water Table (A2)
- ___ Saturation (A3)
- ___ Water Marks (B1)
- ___ Sediment Deposits (B2)
- ___ Drift Deposits (B3)
- ___ Algal Mat or Crust (B4)
- ___ Iron Deposits (B5)
- ___ Inundation Visible on Aerial Imagery (B7)
- ✓ Water-Stained Leaves (B9)
- ___ Aquatic Fauna (B13)
- ___ True Aquatic Plants (B14)
- ___ Hydrogen Sulfide Odor (C1)
- ___ Oxidized Rhizospheres on Living Roots (C3)
- ___ Presence of Reduced Iron (C4)
- ___ Recent Iron Reduction in Tilled Soils (C6)
- ___ Thin Muck Surface (C7)
- ___ Other (Explain in Remarks)

Secondary Indicators (minimum of two required)

- ___ Surface Soil Cracks (B6)
- ___ Sparsely Vegetated Concave Surface (B8)
- ___ Drainage Patterns (B10)
- ___ Moss Trim Lines (B16)
- ___ Dry-Season Water Table (C2)
- ___ Crayfish Burrows (C8)
- ___ Saturation Visible on Aerial Imagery (C9)
- ___ Stunted or Stressed Plants (D1)
- ✓ Geomorphic Position (D2)
- ___ Shallow Aquitard (D3)
- ✓ Microtopographic Relief (D4)
- ___ FAC-Neutral Test (D5)

Field Observations:

Surface Water Present?	Yes ___	No ✓	Depth (inches): ____
Water Table Present?	Yes ___	No ✓	Depth (inches): ____
Saturation Present? (includes capillary fringe)	Yes ✓	No ___	Depth (inches): 2 inches

Wetland Hydrology Present? **Yes** ✓ **No** ___

Describe Recorded Data (stream gauge, monitoring well, aerial photos, previous inspections), if available:

Remarks:

VEGETATION (Four Strata) – Use scientific names of plants.

Sampling Point: DP3

Tree Stratum (Plot size: _____)	Absolute % Cover	Dominant Species?	Indicator Status
1.			
2.			
3.			
4.			
5.			
6.			
7.			
8.			
	0 = Total Cover		
50% of total cover: 0	20% of total cover: 0		

Sapling/Shrub Stratum (Plot size: _____)			
1.			
2.			
3.			
4.			
5.			
6.			
7.			
8.			
	0 = Total Cover		
50% of total cover: 0	20% of total cover: 0		

Herb Stratum (Plot size: _____)			
1. *Carex annectens*	10	No	FACW
2. *Phalaris arundinacea*	50	Yes	FACW
3. *Microstegium vimineum*	5	No	FAC
4. *Rosa multiflora*	5	No	FACU
5. *Onoclea sensibilis*	15	Yes	FACW
6. *Aster sp. (basal leaves)*	20	Yes	
7.			
8.			
9.			
10.			
11.			
12.			
	105 = Total Cover		
50% of total cover: 52.5	20% of total cover: 21		

Woody Vine Stratum (Plot size: _____)			
1.			
2.			
3.			
4.			
5.			
	0 = Total Cover		
50% of total cover: 0	20% of total cover: 0		

Dominance Test worksheet:

Number of Dominant Species That Are OBL, FACW, or FAC: 2 (A)

Total Number of Dominant Species Across All Strata: 3 (B)

Percent of Dominant Species That Are OBL, FACW, or FAC: 66.67 (A/B)

Prevalence Index worksheet:

Total % Cover of:		Multiply by:	
OBL species	0	x 1 =	0
FACW species	75	x 2 =	150
FAC species	5	x 3 =	15
FACU species	5	x 4 =	20
UPL species	0	x 5 =	0
Column Totals:	85 (A)		185 (B)

Prevalence Index = B/A = 2.18

Hydrophytic Vegetation Indicators:

✓ 1 - Rapid Test for Hydrophytic Vegetation

✓ 2 - Dominance Test is >50%

✓ 3 - Prevalence Index is ≤3.0[1]

___ Problematic Hydrophytic Vegetation[1] (Explain)

[1]Indicators of hydric soil and wetland hydrology must be present, unless disturbed or problematic.

Definitions of Four Vegetation Strata:

Tree – Woody plants, excluding vines, 3 in. (7.6 cm) or more in diameter at breast height (DBH), regardless of height.

Sapling/Shrub – Woody plants, excluding vines, less than 3 in. DBH and greater than 3.28 ft (1 m) tall.

Herb – All herbaceous (non-woody) plants, regardless of size, and woody plants less than 3.28 ft tall.

Woody vine – All woody vines greater than 3.28 ft in height.

Hydrophytic Vegetation Present? Yes ✓ No ____

Remarks: (If observed, list morphological adaptations below).

SOIL

Sampling Point: DP3

Profile Description: (Describe to the depth needed to document the indicator or confirm the absence of indicators.)

Depth (inches)	Matrix Color (moist)	Matrix %	Redox Features Color (moist)	Redox Features %	Type[1]	Loc[2]	Texture	Remarks
0-5	10YR 3/1	100					SL	
5-20	10YR 4/1	85	5YR 2.5/1	5			SL	
			7.5YR 5/8	5			SL	
			2.5YR 4/6	5			SL	

[1]Type: C=Concentration, D=Depletion, RM=Reduced Matrix, MS=Masked Sand Grains. [2]Location: PL=Pore Lining, M=Matrix.

Hydric Soil Indicators:

- ___ Histosol (A1)
- ___ Histic Epipedon (A2)
- ___ Black Histic (A3)
- ___ Hydrogen Sulfide (A4)
- ___ Stratified Layers (A5)
- ___ 2 cm Muck (A10) **(LRR N)**
- ___ Depleted Below Dark Surface (A11)
- ___ Thick Dark Surface (A12)
- ___ Sandy Mucky Mineral (S1) **(LRR N, MLRA 147, 148)**
- ___ Sandy Gleyed Matrix (S4)
- ___ Sandy Redox (S5)
- ___ Stripped Matrix (S6)
- ✓ Dark Surface (S7)
- ___ Polyvalue Below Surface (S8) **(MLRA 147, 148)**
- ___ Thin Dark Surface (S9) **(MLRA 147, 148)**
- ___ Loamy Gleyed Matrix (F2)
- ✓ Depleted Matrix (F3)
- ___ Redox Dark Surface (F6)
- ___ Depleted Dark Surface (F7)
- ___ Redox Depressions (F8)
- ___ Iron-Manganese Masses (F12) **(LRR N, MLRA 136)**
- ___ Umbric Surface (F13) **(MLRA 136, 122)**
- ___ Piedmont Floodplain Soils (F19) **(MLRA 148)**
- ___ Red Parent Material (F21) **(MLRA 127, 147)**

Indicators for Problematic Hydric Soils[3]:

- ___ 2 cm Muck (A10) **(MLRA 147)**
- ___ Coast Prairie Redox (A16) **(MLRA 147, 148)**
- ___ Piedmont Floodplain Soils (F19) **(MLRA 136, 147)**
- ___ Very Shallow Dark Surface (TF12)
- ___ Other (Explain in Remarks)

[3]Indicators of hydrophytic vegetation and wetland hydrology must be present, unless disturbed or problematic.

Restrictive Layer (if observed):

Type:

Depth (inches):

Hydric Soil Present? Yes ✓ No ☐

Remarks:

CC_SB3 in GPS

Feature Sketch: Indicate North, CL and Survey Corridor, Photo Locations

Sampling Point: DP3

Feature Photo: Facing - __N __S __E __W __NE __NW __SE __SW

WETLAND DETERMINATION DATA FORM – Eastern Mountains and Piedmont

Project/Site: Chester Creek Gate Blowdown City/County: Chester Sampling Date: 2/27/18

Applicant/Owner: Adelphia State: PA Sampling Point: DP4

Investigator(s): NV5- Scott Angus, Ethan Muller Section, Township, Range: Thornbury

Landform (hillslope, terrace, etc.): Floodplain Local relief (concave, convex, none): Convex Slope (%): 0

Subregion (LRR or MLRA): LRRS Lat: 39.932137º Long: -75.511359º Datum: ____

Soil Map Unit Name: We Wehadkee NWI classification: NA

Are climatic / hydrologic conditions on the site typical for this time of year? Yes ✓ No ___ (If no, explain in Remarks.)

Are Vegetation ✓, Soil ___, or Hydrology ___ significantly disturbed? Are "Normal Circumstances" present? Yes ___ No ✓

Are Vegetation ___, Soil ___, or Hydrology ___ naturally problematic? (If needed, explain any answers in Remarks.)

SUMMARY OF FINDINGS – Attach site map showing sampling point locations, transects, important features, etc.

Hydrophytic Vegetation Present?	Yes ___	No ✓	**Is the Sampled Area within a Wetland?** Yes ___ No ✓
Hydric Soil Present?	Yes ___	No ✓	
Wetland Hydrology Present?	Yes ___	No ✓	

Remarks:

Mowed vegetation in ROW.

HYDROLOGY

Wetland Hydrology Indicators:

Primary Indicators (minimum of one is required; check all that apply)

- ___ Surface Water (A1)
- ___ High Water Table (A2)
- ___ Saturation (A3)
- ___ Water Marks (B1)
- ___ Sediment Deposits (B2)
- ___ Drift Deposits (B3)
- ___ Algal Mat or Crust (B4)
- ___ Iron Deposits (B5)
- ___ Inundation Visible on Aerial Imagery (B7)
- ___ Water-Stained Leaves (B9)
- ___ Aquatic Fauna (B13)
- ___ True Aquatic Plants (B14)
- ___ Hydrogen Sulfide Odor (C1)
- ___ Oxidized Rhizospheres on Living Roots (C3)
- ___ Presence of Reduced Iron (C4)
- ___ Recent Iron Reduction in Tilled Soils (C6)
- ___ Thin Muck Surface (C7)
- ___ Other (Explain in Remarks)

Secondary Indicators (minimum of two required)

- ___ Surface Soil Cracks (B6)
- ___ Sparsely Vegetated Concave Surface (B8)
- ___ Drainage Patterns (B10)
- ___ Moss Trim Lines (B16)
- ___ Dry-Season Water Table (C2)
- ___ Crayfish Burrows (C8)
- ___ Saturation Visible on Aerial Imagery (C9)
- ___ Stunted or Stressed Plants (D1)
- ___ Geomorphic Position (D2)
- ___ Shallow Aquitard (D3)
- ___ Microtopographic Relief (D4)
- ___ FAC-Neutral Test (D5)

Field Observations:

Surface Water Present?	Yes ___	No ✓	Depth (inches): ____
Water Table Present?	Yes ___	No ✓	Depth (inches): ____
Saturation Present? (includes capillary fringe)	Yes ___	No ✓	Depth (inches): ____

Wetland Hydrology Present? Yes ___ No ✓

Describe Recorded Data (stream gauge, monitoring well, aerial photos, previous inspections), if available:

Remarks:

No wetland hydrology indicators present.

VEGETATION (Four Strata) – Use scientific names of plants.

Sampling Point: DP4

Tree Stratum (Plot size: _____)	Absolute % Cover	Dominant Species?	Indicator Status
1.			
2.			
3.			
4.			
5.			
6.			
7.			
8.			
	0 = Total Cover		
50% of total cover: 0	20% of total cover: 0		

Sapling/Shrub Stratum (Plot size: _____)			
1.			
2.			
3.			
4.			
5.			
6.			
7.			
8.			
	0 = Total Cover		
50% of total cover: 0	20% of total cover: 0		

Herb Stratum (Plot size: _____)			
1. *Rosa multiflora*	20	Yes	FACU
2. *Dichanthelium clandestinum*	15	Yes	FAC
3. *Phalaris arundinacea*	10	No	FACW
4. *Microstegium vimineum*	15	Yes	FAC
5. *Glochoma hederacea*	10	No	FACU
6. *Solidago canadensis*	10	No	FACU
7. *Lonicera japonica*	10	No	FACU
8. *Rubus idaeus*	10	No	FAC
9.			
10.			
11.			
12.			
	100 = Total Cover		
50% of total cover: 50	20% of total cover: 20		

Woody Vine Stratum (Plot size: _____)			
1.			
2.			
3.			
4.			
5.			
	0 = Total Cover		
50% of total cover: 0	20% of total cover: 0		

Dominance Test worksheet:

Number of Dominant Species That Are OBL, FACW, or FAC: 2 (A)

Total Number of Dominant Species Across All Strata: 3 (B)

Percent of Dominant Species That Are OBL, FACW, or FAC: 66.67 (A/B)

Prevalence Index worksheet:

Total % Cover of:		Multiply by:
OBL species	0	x 1 = 0
FACW species	10	x 2 = 20
FAC species	40	x 3 = 120
FACU species	50	x 4 = 200
UPL species	0	x 5 = 0
Column Totals:	100 (A)	340 (B)

Prevalence Index = B/A = 3.40

Hydrophytic Vegetation Indicators:

___ 1 - Rapid Test for Hydrophytic Vegetation

___ 2 - Dominance Test is >50%

___ 3 - Prevalence Index is ≤3.0[1]

___ Problematic Hydrophytic Vegetation[1] (Explain)

[1]Indicators of hydric soil and wetland hydrology must be present, unless disturbed or problematic.

Definitions of Four Vegetation Strata:

Tree – Woody plants, excluding vines, 3 in. (7.6 cm) or more in diameter at breast height (DBH), regardless of height.

Sapling/Shrub – Woody plants, excluding vines, less than 3 in. DBH and greater than 3.28 ft (1 m) tall.

Herb – All herbaceous (non-woody) plants, regardless of size, and woody plants less than 3.28 ft tall.

Woody vine – All woody vines greater than 3.28 ft in height.

Hydrophytic Vegetation Present? Yes _____ No ✓

Remarks: (If observed, list morphological adaptations below).

SOIL

Sampling Point: DP4

Profile Description: (Describe to the depth needed to document the indicator or confirm the absence of indicators.)

Depth (inches)	Matrix Color (moist)	Matrix %	Redox Features Color (moist)	Redox Features %	Type[1]	Loc[2]	Texture	Remarks
0-18	10YR 4/4	100					SL	

[1]Type: C=Concentration, D=Depletion, RM=Reduced Matrix, MS=Masked Sand Grains. [2]Location: PL=Pore Lining, M=Matrix.

Hydric Soil Indicators:

___ Histosol (A1)
___ Histic Epipedon (A2)
___ Black Histic (A3)
___ Hydrogen Sulfide (A4)
___ Stratified Layers (A5)
___ 2 cm Muck (A10) **(LRR N)**
___ Depleted Below Dark Surface (A11)
___ Thick Dark Surface (A12)
___ Sandy Mucky Mineral (S1) **(LRR N, MLRA 147, 148)**
___ Sandy Gleyed Matrix (S4)
___ Sandy Redox (S5)
___ Stripped Matrix (S6)
___ Dark Surface (S7)
___ Polyvalue Below Surface (S8) **(MLRA 147, 148)**
___ Thin Dark Surface (S9) **(MLRA 147, 148)**
___ Loamy Gleyed Matrix (F2)
___ Depleted Matrix (F3)
___ Redox Dark Surface (F6)
___ Depleted Dark Surface (F7)
___ Redox Depressions (F8)
___ Iron-Manganese Masses (F12) **(LRR N, MLRA 136)**
___ Umbric Surface (F13) **(MLRA 136, 122)**
___ Piedmont Floodplain Soils (F19) **(MLRA 148)**
___ Red Parent Material (F21) **(MLRA 127, 147)**

Indicators for Problematic Hydric Soils[3]:

___ 2 cm Muck (A10) **(MLRA 147)**
___ Coast Prairie Redox (A16) **(MLRA 147, 148)**
___ Piedmont Floodplain Soils (F19) **(MLRA 136, 147)**
___ Very Shallow Dark Surface (TF12)
___ Other (Explain in Remarks)

[3]Indicators of hydrophytic vegetation and wetland hydrology must be present, unless disturbed or problematic.

Restrictive Layer (if observed):

Type:

Depth (inches):

Hydric Soil Present? **Yes** ☐ **No** ☑

Remarks:

CC_SB4 in GPS

Feature Sketch: Indicate North, CL and Survey Corridor, Photo Locations

Sampling Point: DP4

Feature Photo: Facing - __N __S __E __W __NE __NW __SE __SW

WETLAND DETERMINATION DATA FORM – Eastern Mountains and Piedmont

Project/Site: Cromby Gate Blowdown City/County: Chester Sampling Date: 2/28/18

Applicant/Owner: Adelphia State: PA Sampling Point: DP1

Investigator(s): NV5- Scott Angus, Ethan Muller Section, Township, Range: Phoenixville

Landform (hillslope, terrace, etc.): Terrace Local relief (concave, convex, none): None Slope (%): 0

Subregion (LRR or MLRA): LRRS Lat: 40.151844º Long: -75.533063º Datum: ____

Soil Map Unit Name: PeB Penn NWI classification: NA

Are climatic / hydrologic conditions on the site typical for this time of year? Yes ✓ No ___ (If no, explain in Remarks.)

Are Vegetation ✓, Soil ___, or Hydrology ___ significantly disturbed? Are "Normal Circumstances" present? Yes ___ No ✓

Are Vegetation ___, Soil ___, or Hydrology ___ naturally problematic? (If needed, explain any answers in Remarks.)

SUMMARY OF FINDINGS – Attach site map showing sampling point locations, transects, important features, etc.

Hydrophytic Vegetation Present?	Yes ___	No ✓	**Is the Sampled Area within a Wetland?** Yes ___ No ✓
Hydric Soil Present?	Yes ___	No ✓	
Wetland Hydrology Present?	Yes ___	No ✓	

Remarks:

Mowed vegetation within ROW.

HYDROLOGY

Wetland Hydrology Indicators:

Primary Indicators (minimum of one is required; check all that apply)

- ___ Surface Water (A1)
- ___ High Water Table (A2)
- ___ Saturation (A3)
- ___ Water Marks (B1)
- ___ Sediment Deposits (B2)
- ___ Drift Deposits (B3)
- ___ Algal Mat or Crust (B4)
- ___ Iron Deposits (B5)
- ___ Inundation Visible on Aerial Imagery (B7)
- ___ Water-Stained Leaves (B9)
- ___ Aquatic Fauna (B13)
- ___ True Aquatic Plants (B14)
- ___ Hydrogen Sulfide Odor (C1)
- ___ Oxidized Rhizospheres on Living Roots (C3)
- ___ Presence of Reduced Iron (C4)
- ___ Recent Iron Reduction in Tilled Soils (C6)
- ___ Thin Muck Surface (C7)
- ___ Other (Explain in Remarks)

Secondary Indicators (minimum of two required)

- ___ Surface Soil Cracks (B6)
- ___ Sparsely Vegetated Concave Surface (B8)
- ___ Drainage Patterns (B10)
- ___ Moss Trim Lines (B16)
- ___ Dry-Season Water Table (C2)
- ___ Crayfish Burrows (C8)
- ___ Saturation Visible on Aerial Imagery (C9)
- ___ Stunted or Stressed Plants (D1)
- ___ Geomorphic Position (D2)
- ___ Shallow Aquitard (D3)
- ___ Microtopographic Relief (D4)
- ___ FAC-Neutral Test (D5)

Field Observations:

Surface Water Present?	Yes ___	No ✓	Depth (inches): ____
Water Table Present?	Yes ___	No ✓	Depth (inches): ____
Saturation Present? (includes capillary fringe)	Yes ___	No ✓	Depth (inches): ____

Wetland Hydrology Present? Yes ___ No ✓

Describe Recorded Data (stream gauge, monitoring well, aerial photos, previous inspections), if available:

Remarks:

No wetland hydrology indicators are present.

VEGETATION (Four Strata) – Use scientific names of plants.

Sampling Point: DP1

Tree Stratum (Plot size: _____)	Absolute % Cover	Dominant Species?	Indicator Status
1.			
2.			
3.			
4.			
5.			
6.			
7.			
8.			
	0 = Total Cover		
50% of total cover: 0	20% of total cover: 0		

Sapling/Shrub Stratum (Plot size: _____)			
1.			
2.			
3.			
4.			
5.			
6.			
7.			
8.			
	0 = Total Cover		
50% of total cover: 0	20% of total cover: 0		

Herb Stratum (Plot size: _____)			
1. *Schedonorus sp.*	20	Yes	
2. *Artmesia vulgaris*	40	Yes	UPL
3. *Symphyotrichum lateriflorum*	10	No	FACW
4. *Danthonia spicata*	30	Yes	NI
5.			
6.			
7.			
8.			
9.			
10.			
11.			
12.			
	100 = Total Cover		
50% of total cover: 50	20% of total cover: 20		

Woody Vine Stratum (Plot size: _____)			
1.			
2.			
3.			
4.			
5.			
	0 = Total Cover		
50% of total cover: 0	20% of total cover: 0		

Dominance Test worksheet:

Number of Dominant Species That Are OBL, FACW, or FAC: 0 (A)

Total Number of Dominant Species Across All Strata: 2 (B)

Percent of Dominant Species That Are OBL, FACW, or FAC: 0.00 (A/B)

Prevalence Index worksheet:

Total % Cover of:		Multiply by:	
OBL species	0	x 1 =	0
FACW species	10	x 2 =	20
FAC species	0	x 3 =	0
FACU species	0	x 4 =	0
UPL species	40	x 5 =	200
Column Totals:	50 (A)		220 (B)

Prevalence Index = B/A = 4.40

Hydrophytic Vegetation Indicators:

___ 1 - Rapid Test for Hydrophytic Vegetation

___ 2 - Dominance Test is >50%

___ 3 - Prevalence Index is ≤3.0[1]

___ Problematic Hydrophytic Vegetation[1] (Explain)

[1]Indicators of hydric soil and wetland hydrology must be present, unless disturbed or problematic.

Definitions of Four Vegetation Strata:

Tree – Woody plants, excluding vines, 3 in. (7.6 cm) or more in diameter at breast height (DBH), regardless of height.

Sapling/Shrub – Woody plants, excluding vines, less than 3 in. DBH and greater than 3.28 ft (1 m) tall.

Herb – All herbaceous (non-woody) plants, regardless of size, and woody plants less than 3.28 ft tall.

Woody vine – All woody vines greater than 3.28 ft in height.

Hydrophytic Vegetation Present? Yes _____ No ✓

Remarks: (If observed, list morphological adaptations below).

SOIL

Sampling Point: DP1

Profile Description: (Describe to the depth needed to document the indicator or confirm the absence of indicators.)

Depth (inches)	Matrix Color (moist)	Matrix %	Redox Features Color (moist)	Redox Features %	Type[1]	Loc[2]	Texture	Remarks
0-8	10YR 4/4	100					CL	with gravel
	Refusal							

[1]Type: C=Concentration, D=Depletion, RM=Reduced Matrix, MS=Masked Sand Grains. [2]Location: PL=Pore Lining, M=Matrix.

Hydric Soil Indicators:

- ___ Histosol (A1)
- ___ Histic Epipedon (A2)
- ___ Black Histic (A3)
- ___ Hydrogen Sulfide (A4)
- ___ Stratified Layers (A5)
- ___ 2 cm Muck (A10) **(LRR N)**
- ___ Depleted Below Dark Surface (A11)
- ___ Thick Dark Surface (A12)
- ___ Sandy Mucky Mineral (S1) **(LRR N, MLRA 147, 148)**
- ___ Sandy Gleyed Matrix (S4)
- ___ Sandy Redox (S5)
- ___ Stripped Matrix (S6)
- ___ Dark Surface (S7)
- ___ Polyvalue Below Surface (S8) **(MLRA 147, 148)**
- ___ Thin Dark Surface (S9) **(MLRA 147, 148)**
- ___ Loamy Gleyed Matrix (F2)
- ___ Depleted Matrix (F3)
- ___ Redox Dark Surface (F6)
- ___ Depleted Dark Surface (F7)
- ___ Redox Depressions (F8)
- ___ Iron-Manganese Masses (F12) **(LRR N, MLRA 136)**
- ___ Umbric Surface (F13) **(MLRA 136, 122)**
- ___ Piedmont Floodplain Soils (F19) **(MLRA 148)**
- ___ Red Parent Material (F21) **(MLRA 127, 147)**

Indicators for Problematic Hydric Soils[3]:

- ___ 2 cm Muck (A10) **(MLRA 147)**
- ___ Coast Prairie Redox (A16) **(MLRA 147, 148)**
- ___ Piedmont Floodplain Soils (F19) **(MLRA 136, 147)**
- ___ Very Shallow Dark Surface (TF12)
- ___ Other (Explain in Remarks)

[3]Indicators of hydrophytic vegetation and wetland hydrology must be present, unless disturbed or problematic.

Restrictive Layer (if observed):

Type:

Depth (inches):

Hydric Soil Present? **Yes** ☐ **No** ☑

Remarks:

Cr_SB1 in GPS

Feature Sketch: Indicate North, CL and Survey Corridor, Photo Locations

Sampling Point: DP1

Feature Photo: Facing - __N __S __E __W __NE __NW __SE __SW

WETLAND DETERMINATION DATA FORM – Eastern Mountains and Piedmont

Project/Site: East Perkiomen Creek Gate Blowdown City/County: Montgomery Sampling Date: 3/1/18

Applicant/Owner: Adelphia State: PA Sampling Point: DP1

Investigator(s): NV5- Scott Angus, Ethan Muller Section, Township, Range: Skippack

Landform (hillslope, terrace, etc.): Hillslope Local relief (concave, convex, none): Concave Slope (%): 7

Subregion (LRR or MLRA): LRRS Lat: 40.250648º Long: -75.441680º Datum: _____

Soil Map Unit Name: Rt Rowland NWI classification: NA

Are climatic / hydrologic conditions on the site typical for this time of year? Yes ✓ No ___ (If no, explain in Remarks.)

Are Vegetation ✓, Soil ___, or Hydrology ___ significantly disturbed? Are "Normal Circumstances" present? Yes ___ No ✓

Are Vegetation ___, Soil ___, or Hydrology ___ naturally problematic? (If needed, explain any answers in Remarks.)

SUMMARY OF FINDINGS – Attach site map showing sampling point locations, transects, important features, etc.

Hydrophytic Vegetation Present?	Yes ✓	No ___	**Is the Sampled Area within a Wetland?** **Yes** ✓ **No** ___
Hydric Soil Present?	Yes ✓	No ___	
Wetland Hydrology Present?	Yes ✓	No ___	

Remarks:

Mowed vegetation, ROW cuts through a field.
EP-W-01

HYDROLOGY

Wetland Hydrology Indicators:

Primary Indicators (minimum of one is required; check all that apply)

- ___ Surface Water (A1)
- ___ High Water Table (A2)
- ✓ Saturation (A3)
- ___ Water Marks (B1)
- ___ Sediment Deposits (B2)
- ___ Drift Deposits (B3)
- ___ Algal Mat or Crust (B4)
- ___ Iron Deposits (B5)
- ___ Inundation Visible on Aerial Imagery (B7)
- ✓ Water-Stained Leaves (B9)
- ___ Aquatic Fauna (B13)
- ___ True Aquatic Plants (B14)
- ___ Hydrogen Sulfide Odor (C1)
- ___ Oxidized Rhizospheres on Living Roots (C3)
- ___ Presence of Reduced Iron (C4)
- ___ Recent Iron Reduction in Tilled Soils (C6)
- ___ Thin Muck Surface (C7)
- ___ Other (Explain in Remarks)

Secondary Indicators (minimum of two required)

- ___ Surface Soil Cracks (B6)
- ___ Sparsely Vegetated Concave Surface (B8)
- ✓ Drainage Patterns (B10)
- ___ Moss Trim Lines (B16)
- ___ Dry-Season Water Table (C2)
- ___ Crayfish Burrows (C8)
- ___ Saturation Visible on Aerial Imagery (C9)
- ___ Stunted or Stressed Plants (D1)
- ___ Geomorphic Position (D2)
- ___ Shallow Aquitard (D3)
- ___ Microtopographic Relief (D4)
- ___ FAC-Neutral Test (D5)

Field Observations:

Surface Water Present?	Yes ___	No ✓	Depth (inches): _____
Water Table Present?	Yes ___	No ✓	Depth (inches): _____
Saturation Present? (includes capillary fringe)	Yes ✓	No ___	Depth (inches): Surface

Wetland Hydrology Present? **Yes** ✓ **No** ___

Describe Recorded Data (stream gauge, monitoring well, aerial photos, previous inspections), if available:

Remarks:

VEGETATION (Four Strata) – Use scientific names of plants.

Sampling Point: DP1

Tree Stratum (Plot size: _____)	Absolute % Cover	Dominant Species?	Indicator Status
1.			
2.			
3.			
4.			
5.			
6.			
7.			
8.			
	0 = Total Cover		
50% of total cover: 0	20% of total cover: 0		

Sapling/Shrub Stratum (Plot size: _____)			
1.			
2.			
3.			
4.			
5.			
6.			
7.			
8.			
	0 = Total Cover		
50% of total cover: 0	20% of total cover: 0		

Herb Stratum (Plot size: _____)			
1. *Phalaris arundinacea*	90	Yes	FACW
2. *Solidago gigantea*	10	No	FACW
3.			
4.			
5.			
6.			
7.			
8.			
9.			
10.			
11.			
12.			
	100 = Total Cover		
50% of total cover: 50	20% of total cover: 20		

Woody Vine Stratum (Plot size: _____)			
1.			
2.			
3.			
4.			
5.			
	0 = Total Cover		
50% of total cover: 0	20% of total cover: 0		

Dominance Test worksheet:

Number of Dominant Species That Are OBL, FACW, or FAC: 1 (A)

Total Number of Dominant Species Across All Strata: 1 (B)

Percent of Dominant Species That Are OBL, FACW, or FAC: 100.00 (A/B)

Prevalence Index worksheet:

Total % Cover of:		Multiply by:
OBL species	0	x 1 = 0
FACW species	100	x 2 = 200
FAC species	0	x 3 = 0
FACU species	0	x 4 = 0
UPL species	0	x 5 = 0
Column Totals:	100 (A)	200 (B)

Prevalence Index = B/A = 2.00

Hydrophytic Vegetation Indicators:

✓ 1 - Rapid Test for Hydrophytic Vegetation

✓ 2 - Dominance Test is >50%

✓ 3 - Prevalence Index is ≤3.0[1]

___ Problematic Hydrophytic Vegetation[1] (Explain)

[1]Indicators of hydric soil and wetland hydrology must be present, unless disturbed or problematic.

Definitions of Four Vegetation Strata:

Tree – Woody plants, excluding vines, 3 in. (7.6 cm) or more in diameter at breast height (DBH), regardless of height.

Sapling/Shrub – Woody plants, excluding vines, less than 3 in. DBH and greater than 3.28 ft (1 m) tall.

Herb – All herbaceous (non-woody) plants, regardless of size, and woody plants less than 3.28 ft tall.

Woody vine – All woody vines greater than 3.28 ft in height.

Hydrophytic Vegetation Present? Yes ✓ No _____

Remarks: (If observed, list morphological adaptations below).

SOIL

Sampling Point: DP1

Profile Description: (Describe to the depth needed to document the indicator or confirm the absence of indicators.)

Depth (inches)	Matrix Color (moist)	Matrix %	Redox Features Color (moist)	Redox Features %	Type[1]	Loc[2]	Texture	Remarks
0-18	2.5YR 4/2	90	2.5YR 5/4	10			SCL	

[1]Type: C=Concentration, D=Depletion, RM=Reduced Matrix, MS=Masked Sand Grains. [2]Location: PL=Pore Lining, M=Matrix.

Hydric Soil Indicators:

- ___ Histosol (A1)
- ___ Histic Epipedon (A2)
- ___ Black Histic (A3)
- ___ Hydrogen Sulfide (A4)
- ___ Stratified Layers (A5)
- ___ 2 cm Muck (A10) **(LRR N)**
- ___ Depleted Below Dark Surface (A11)
- ___ Thick Dark Surface (A12)
- ___ Sandy Mucky Mineral (S1) **(LRR N, MLRA 147, 148)**
- ___ Sandy Gleyed Matrix (S4)
- ___ Sandy Redox (S5)
- ___ Stripped Matrix (S6)
- ___ Dark Surface (S7)
- ___ Polyvalue Below Surface (S8) **(MLRA 147, 148)**
- ___ Thin Dark Surface (S9) **(MLRA 147, 148)**
- ___ Loamy Gleyed Matrix (F2)
- ✓ Depleted Matrix (F3)
- ___ Redox Dark Surface (F6)
- ___ Depleted Dark Surface (F7)
- ___ Redox Depressions (F8)
- ___ Iron-Manganese Masses (F12) **(LRR N, MLRA 136)**
- ___ Umbric Surface (F13) **(MLRA 136, 122)**
- ___ Piedmont Floodplain Soils (F19) **(MLRA 148)**
- ✓ Red Parent Material (F21) **(MLRA 127, 147)**

Indicators for Problematic Hydric Soils[3]:

- ___ 2 cm Muck (A10) **(MLRA 147)**
- ___ Coast Prairie Redox (A16) **(MLRA 147, 148)**
- ___ Piedmont Floodplain Soils (F19) **(MLRA 136, 147)**
- ___ Very Shallow Dark Surface (TF12)
- ___ Other (Explain in Remarks)

[3]Indicators of hydrophytic vegetation and wetland hydrology must be present, unless disturbed or problematic.

Restrictive Layer (if observed):

Type:

Depth (inches):

Hydric Soil Present? Yes ✓ No ☐

Remarks:

EPe_SB1 in GPS

Feature Sketch: Indicate North, CL and Survey Corridor, Photo Locations

Sampling Point: DP1

Feature Photo: Facing - __N __S __E __W __NE __NW __SE __SW

WETLAND DETERMINATION DATA FORM – Eastern Mountains and Piedmont

Project/Site: East Perkiomen Creek Gate Blowdown City/County: Montgomery Sampling Date: 3/1/18

Applicant/Owner: Adelphia State: PA Sampling Point: DP2

Investigator(s): NV5- Scott Angus, Ethan Muller Section, Township, Range: Skippack

Landform (hillslope, terrace, etc.): Hillslope Local relief (concave, convex, none): None Slope (%): 5

Subregion (LRR or MLRA): LRRS Lat: 40.250708º Long: -75.441732º Datum: _____

Soil Map Unit Name: Rt Rowland NWI classification: NA

Are climatic / hydrologic conditions on the site typical for this time of year? Yes ✓ No ___ (If no, explain in Remarks.)

Are Vegetation ✓, Soil ___, or Hydrology ___ significantly disturbed? Are "Normal Circumstances" present? Yes ___ No ✓

Are Vegetation ___, Soil ___, or Hydrology ___ naturally problematic? (If needed, explain any answers in Remarks.)

SUMMARY OF FINDINGS – Attach site map showing sampling point locations, transects, important features, etc.

Hydrophytic Vegetation Present?	Yes ___	No ✓	**Is the Sampled Area within a Wetland?** Yes ___ No ✓
Hydric Soil Present?	Yes ___	No ✓	
Wetland Hydrology Present?	Yes ___	No ✓	

Remarks:

Mowed vegetation, ROW cuts through a field.

HYDROLOGY

Wetland Hydrology Indicators:

Primary Indicators (minimum of one is required; check all that apply)

- ___ Surface Water (A1)
- ___ High Water Table (A2)
- ___ Saturation (A3)
- ___ Water Marks (B1)
- ___ Sediment Deposits (B2)
- ___ Drift Deposits (B3)
- ___ Algal Mat or Crust (B4)
- ___ Iron Deposits (B5)
- ___ Inundation Visible on Aerial Imagery (B7)
- ___ Water-Stained Leaves (B9)
- ___ Aquatic Fauna (B13)
- ___ True Aquatic Plants (B14)
- ___ Hydrogen Sulfide Odor (C1)
- ___ Oxidized Rhizospheres on Living Roots (C3)
- ___ Presence of Reduced Iron (C4)
- ___ Recent Iron Reduction in Tilled Soils (C6)
- ___ Thin Muck Surface (C7)
- ___ Other (Explain in Remarks)

Secondary Indicators (minimum of two required)

- ___ Surface Soil Cracks (B6)
- ___ Sparsely Vegetated Concave Surface (B8)
- ___ Drainage Patterns (B10)
- ___ Moss Trim Lines (B16)
- ___ Dry-Season Water Table (C2)
- ___ Crayfish Burrows (C8)
- ___ Saturation Visible on Aerial Imagery (C9)
- ___ Stunted or Stressed Plants (D1)
- ___ Geomorphic Position (D2)
- ___ Shallow Aquitard (D3)
- ___ Microtopographic Relief (D4)
- ___ FAC-Neutral Test (D5)

Field Observations:

Surface Water Present?	Yes ___	No ✓	Depth (inches): _____
Water Table Present?	Yes ___	No ✓	Depth (inches): _____
Saturation Present? (includes capillary fringe)	Yes ___	No ✓	Depth (inches): _____

Wetland Hydrology Present? Yes ___ No ✓

Describe Recorded Data (stream gauge, monitoring well, aerial photos, previous inspections), if available:

Remarks:

No wetland hydrology indicators present.

VEGETATION (Four Strata) – Use scientific names of plants.

Sampling Point: DP2

Tree Stratum (Plot size: _____)	Absolute % Cover	Dominant Species?	Indicator Status
1.			
2.			
3.			
4.			
5.			
6.			
7.			
8.			
	0 = Total Cover		
50% of total cover: 0	20% of total cover: 0		

Sapling/Shrub Stratum (Plot size: _____)			
1. *Juniperus virginiana*	20	No	FACU
2.			
3.			
4.			
5.			
6.			
7.			
8.			
	20 = Total Cover		
50% of total cover: 10	20% of total cover: 4		

Herb Stratum (Plot size: _____)			
1. *Phleum pratense*	40	Yes	FACU
2. *Oenothera biennis*	10	No	FACU
3. *Solidago canadensis*	10	No	FACU
4. *Cerastium fontanum*	5	No	FACU
5. *Rosa multiflora*	10	No	FACU
6.			
7.			
8.			
9.			
10.			
11.			
12.			
	75 = Total Cover		
50% of total cover: 37.5	20% of total cover: 15		

Woody Vine Stratum (Plot size: _____)			
1.			
2.			
3.			
4.			
5.			
	0 = Total Cover		
50% of total cover: 0	20% of total cover: 0		

Dominance Test worksheet:

Number of Dominant Species That Are OBL, FACW, or FAC: 0 (A)

Total Number of Dominant Species Across All Strata: 1 (B)

Percent of Dominant Species That Are OBL, FACW, or FAC: 0.00 (A/B)

Prevalence Index worksheet:

Total % Cover of:		Multiply by:	
OBL species	0	x 1 =	0
FACW species	0	x 2 =	0
FAC species	0	x 3 =	0
FACU species	95	x 4 =	380
UPL species	0	x 5 =	0
Column Totals:	95 (A)		380 (B)

Prevalence Index = B/A = 4.00

Hydrophytic Vegetation Indicators:

___ 1 - Rapid Test for Hydrophytic Vegetation

___ 2 - Dominance Test is >50%

___ 3 - Prevalence Index is ≤3.0[1]

___ Problematic Hydrophytic Vegetation[1] (Explain)

[1]Indicators of hydric soil and wetland hydrology must be present, unless disturbed or problematic.

Definitions of Four Vegetation Strata:

Tree – Woody plants, excluding vines, 3 in. (7.6 cm) or more in diameter at breast height (DBH), regardless of height.

Sapling/Shrub – Woody plants, excluding vines, less than 3 in. DBH and greater than 3.28 ft (1 m) tall.

Herb – All herbaceous (non-woody) plants, regardless of size, and woody plants less than 3.28 ft tall.

Woody vine – All woody vines greater than 3.28 ft in height.

Hydrophytic Vegetation Present? Yes _____ No ✓

Remarks: (If observed, list morphological adaptations below).

SOIL

Sampling Point: DP2

Profile Description: (Describe to the depth needed to document the indicator or confirm the absence of indicators.)

Depth (inches)	Matrix Color (moist)	Matrix %	Redox Features Color (moist)	Redox Features %	Type[1]	Loc[2]	Texture	Remarks
0-8	2.5YR 5/6	100					CL	
	Refusal							

[1]Type: C=Concentration, D=Depletion, RM=Reduced Matrix, MS=Masked Sand Grains. [2]Location: PL=Pore Lining, M=Matrix.

Hydric Soil Indicators:

- ___ Histosol (A1)
- ___ Histic Epipedon (A2)
- ___ Black Histic (A3)
- ___ Hydrogen Sulfide (A4)
- ___ Stratified Layers (A5)
- ___ 2 cm Muck (A10) **(LRR N)**
- ___ Depleted Below Dark Surface (A11)
- ___ Thick Dark Surface (A12)
- ___ Sandy Mucky Mineral (S1) **(LRR N, MLRA 147, 148)**
- ___ Sandy Gleyed Matrix (S4)
- ___ Sandy Redox (S5)
- ___ Stripped Matrix (S6)
- ___ Dark Surface (S7)
- ___ Polyvalue Below Surface (S8) **(MLRA 147, 148)**
- ___ Thin Dark Surface (S9) **(MLRA 147, 148)**
- ___ Loamy Gleyed Matrix (F2)
- ___ Depleted Matrix (F3)
- ___ Redox Dark Surface (F6)
- ___ Depleted Dark Surface (F7)
- ___ Redox Depressions (F8)
- ___ Iron-Manganese Masses (F12) **(LRR N, MLRA 136)**
- ___ Umbric Surface (F13) **(MLRA 136, 122)**
- ___ Piedmont Floodplain Soils (F19) **(MLRA 148)**
- ✓ Red Parent Material (F21) **(MLRA 127, 147)**

Indicators for Problematic Hydric Soils[3]:

- ___ 2 cm Muck (A10) **(MLRA 147)**
- ___ Coast Prairie Redox (A16) **(MLRA 147, 148)**
- ___ Piedmont Floodplain Soils (F19) **(MLRA 136, 147)**
- ___ Very Shallow Dark Surface (TF12)
- ___ Other (Explain in Remarks)

[3]Indicators of hydrophytic vegetation and wetland hydrology must be present, unless disturbed or problematic.

Restrictive Layer (if observed):

Type:

Depth (inches):

Hydric Soil Present? **Yes** ☐ **No** ☑

Remarks:

EPe_SB2 in GPS

Feature Sketch: Indicate North, CL and Survey Corridor, Photo Locations

Sampling Point: DP2

Feature Photo: Facing - __N __S __E __W __NE __NW __SE __SW

WETLAND DETERMINATION DATA FORM – Eastern Mountains and Piedmont

Project/Site: French Creek City/County: Chester Sampling Date: 2/28/18

Applicant/Owner: Adelphia State: PA Sampling Point: DP1

Investigator(s): NV5- Scott Angus, Ethan Muller Section, Township, Range: East Pikeland

Landform (hillslope, terrace, etc.): Hillslope Local relief (concave, convex, none): None Slope (%): 15

Subregion (LRR or MLRA): LRRS Lat: 40.133346º Long: -75.549027º Datum: ____

Soil Map Unit Name: PeC Penn NWI classification: NA

Are climatic / hydrologic conditions on the site typical for this time of year? Yes ✓ No ___ (If no, explain in Remarks.)

Are Vegetation ✓, Soil ___, or Hydrology ___ significantly disturbed? Are "Normal Circumstances" present? Yes ___ No ✓

Are Vegetation ___, Soil ___, or Hydrology ___ naturally problematic? (If needed, explain any answers in Remarks.)

SUMMARY OF FINDINGS – Attach site map showing sampling point locations, transects, important features, etc.

Hydrophytic Vegetation Present?	Yes ___	No ✓	**Is the Sampled Area within a Wetland?** Yes ___ No ✓
Hydric Soil Present?	Yes ___	No ✓	
Wetland Hydrology Present?	Yes ___	No ✓	

Remarks:

Mowed vegetation within ROW.

HYDROLOGY

Wetland Hydrology Indicators:

Primary Indicators (minimum of one is required; check all that apply)

- ___ Surface Water (A1)
- ___ High Water Table (A2)
- ___ Saturation (A3)
- ___ Water Marks (B1)
- ___ Sediment Deposits (B2)
- ___ Drift Deposits (B3)
- ___ Algal Mat or Crust (B4)
- ___ Iron Deposits (B5)
- ___ Inundation Visible on Aerial Imagery (B7)
- ___ Water-Stained Leaves (B9)
- ___ Aquatic Fauna (B13)
- ___ True Aquatic Plants (B14)
- ___ Hydrogen Sulfide Odor (C1)
- ___ Oxidized Rhizospheres on Living Roots (C3)
- ___ Presence of Reduced Iron (C4)
- ___ Recent Iron Reduction in Tilled Soils (C6)
- ___ Thin Muck Surface (C7)
- ___ Other (Explain in Remarks)

Secondary Indicators (minimum of two required)

- ___ Surface Soil Cracks (B6)
- ___ Sparsely Vegetated Concave Surface (B8)
- ___ Drainage Patterns (B10)
- ___ Moss Trim Lines (B16)
- ___ Dry-Season Water Table (C2)
- ___ Crayfish Burrows (C8)
- ___ Saturation Visible on Aerial Imagery (C9)
- ___ Stunted or Stressed Plants (D1)
- ___ Geomorphic Position (D2)
- ___ Shallow Aquitard (D3)
- ___ Microtopographic Relief (D4)
- ___ FAC-Neutral Test (D5)

Field Observations:

Surface Water Present?	Yes ___	No ✓	Depth (inches): ____
Water Table Present?	Yes ___	No ✓	Depth (inches): ____
Saturation Present? (includes capillary fringe)	Yes ___	No ✓	Depth (inches): ____

Wetland Hydrology Present? Yes ___ No ✓

Describe Recorded Data (stream gauge, monitoring well, aerial photos, previous inspections), if available:

Remarks:

No wetland hydrology indicators are present.

VEGETATION (Four Strata) – Use scientific names of plants.

Sampling Point: DP1

Tree Stratum (Plot size: _____)	Absolute % Cover	Dominant Species?	Indicator Status
1.			
2.			
3.			
4.			
5.			
6.			
7.			
8.			
	0 = Total Cover		
50% of total cover: 0	20% of total cover: 0		

Sapling/Shrub Stratum (Plot size: _____)			
1.			
2.			
3.			
4.			
5.			
6.			
7.			
8.			
	0 = Total Cover		
50% of total cover: 0	20% of total cover: 0		

Herb Stratum (Plot size: _____)			
1. *Schedonorus sp.*	80	Yes	
2. *Taraxacum officinale*	10	No	FACU
3. *moss sp.*	10	No	
4.			
5.			
6.			
7.			
8.			
9.			
10.			
11.			
12.			
	100 = Total Cover		
50% of total cover: 50	20% of total cover: 20		

Woody Vine Stratum (Plot size: _____)			
1.			
2.			
3.			
4.			
5.			
	0 = Total Cover		
50% of total cover: 0	20% of total cover: 0		

Dominance Test worksheet:

Number of Dominant Species That Are OBL, FACW, or FAC: 0 (A)

Total Number of Dominant Species Across All Strata: 1 (B)

Percent of Dominant Species That Are OBL, FACW, or FAC: 0.00 (A/B)

Prevalence Index worksheet:

Total % Cover of:		Multiply by:	
OBL species	0	x 1 =	0
FACW species	0	x 2 =	0
FAC species	0	x 3 =	0
FACU species	10	x 4 =	40
UPL species	0	x 5 =	0
Column Totals:	10 (A)		40 (B)

Prevalence Index = B/A = 4.00

Hydrophytic Vegetation Indicators:

___ 1 - Rapid Test for Hydrophytic Vegetation

___ 2 - Dominance Test is >50%

___ 3 - Prevalence Index is ≤3.0[1]

___ Problematic Hydrophytic Vegetation[1] (Explain)

[1]Indicators of hydric soil and wetland hydrology must be present, unless disturbed or problematic.

Definitions of Four Vegetation Strata:

Tree – Woody plants, excluding vines, 3 in. (7.6 cm) or more in diameter at breast height (DBH), regardless of height.

Sapling/Shrub – Woody plants, excluding vines, less than 3 in. DBH and greater than 3.28 ft (1 m) tall.

Herb – All herbaceous (non-woody) plants, regardless of size, and woody plants less than 3.28 ft tall.

Woody vine – All woody vines greater than 3.28 ft in height.

Hydrophytic Vegetation Present? Yes _____ No ✓

Remarks: (If observed, list morphological adaptations below).

SOIL

Sampling Point: DP1

Profile Description: (Describe to the depth needed to document the indicator or confirm the absence of indicators.)

Depth (inches)	Matrix Color (moist)	Matrix %	Redox Features Color (moist)	Redox Features %	Type[1]	Loc[2]	Texture	Remarks
0-8	10YR 4/4	100					CL	
	Refusal							

[1]Type: C=Concentration, D=Depletion, RM=Reduced Matrix, MS=Masked Sand Grains. [2]Location: PL=Pore Lining, M=Matrix.

Hydric Soil Indicators:

- ___ Histosol (A1)
- ___ Histic Epipedon (A2)
- ___ Black Histic (A3)
- ___ Hydrogen Sulfide (A4)
- ___ Stratified Layers (A5)
- ___ 2 cm Muck (A10) **(LRR N)**
- ___ Depleted Below Dark Surface (A11)
- ___ Thick Dark Surface (A12)
- ___ Sandy Mucky Mineral (S1) **(LRR N, MLRA 147, 148)**
- ___ Sandy Gleyed Matrix (S4)
- ___ Sandy Redox (S5)
- ___ Stripped Matrix (S6)
- ___ Dark Surface (S7)
- ___ Polyvalue Below Surface (S8) **(MLRA 147, 148)**
- ___ Thin Dark Surface (S9) **(MLRA 147, 148)**
- ___ Loamy Gleyed Matrix (F2)
- ___ Depleted Matrix (F3)
- ___ Redox Dark Surface (F6)
- ___ Depleted Dark Surface (F7)
- ___ Redox Depressions (F8)
- ___ Iron-Manganese Masses (F12) **(LRR N, MLRA 136)**
- ___ Umbric Surface (F13) **(MLRA 136, 122)**
- ___ Piedmont Floodplain Soils (F19) **(MLRA 148)**
- ___ Red Parent Material (F21) **(MLRA 127, 147)**

Indicators for Problematic Hydric Soils[3]:

- ___ 2 cm Muck (A10) **(MLRA 147)**
- ___ Coast Prairie Redox (A16) **(MLRA 147, 148)**
- ___ Piedmont Floodplain Soils (F19) **(MLRA 136, 147)**
- ___ Very Shallow Dark Surface (TF12)
- ___ Other (Explain in Remarks)

[3]Indicators of hydrophytic vegetation and wetland hydrology must be present, unless disturbed or problematic.

Restrictive Layer (if observed):

Type:

Depth (inches):

Hydric Soil Present? **Yes** ☐ **No** ☑

Remarks:

Fr_SB1 in GPS

Feature Sketch: Indicate North, CL and Survey Corridor, Photo Locations

Sampling Point: DP1

Feature Photo: Facing - __N __S __E __W __NE __NW __SE __SW

WETLAND DETERMINATION DATA FORM – Eastern Mountains and Piedmont

Project/Site: MLV 1 City/County: Delaware Sampling Date: 2/27/18

Applicant/Owner: Adelphia State: PA Sampling Point: DP1

Investigator(s): NV5- Scott Angus, Ethan Muller Section, Township, Range: Glen Mills

Landform (hillslope, terrace, etc.): Terrace Local relief (concave, convex, none): Concave Slope (%): 5

Subregion (LRR or MLRA): LRRS Lat: 39.897990º Long: -75.488493º Datum: ____

Soil Map Unit Name: GeB Glenelg NWI classification: NA

Are climatic / hydrologic conditions on the site typical for this time of year? Yes ✓ No ___ (If no, explain in Remarks.)

Are Vegetation ✓, Soil ___, or Hydrology ___ significantly disturbed? Are "Normal Circumstances" present? Yes ___ No ✓

Are Vegetation ___, Soil ___, or Hydrology ___ naturally problematic? (If needed, explain any answers in Remarks.)

SUMMARY OF FINDINGS – Attach site map showing sampling point locations, transects, important features, etc.

Hydrophytic Vegetation Present?	Yes ___	No ✓	**Is the Sampled Area within a Wetland?** **Yes** ___ **No** ✓
Hydric Soil Present?	Yes ___	No ✓	
Wetland Hydrology Present?	Yes ___	No ✓	

Remarks:

Mowed vegetation within ROW.

HYDROLOGY

Wetland Hydrology Indicators:

Primary Indicators (minimum of one is required; check all that apply)

- ___ Surface Water (A1)
- ___ High Water Table (A2)
- ___ Saturation (A3)
- ___ Water Marks (B1)
- ___ Sediment Deposits (B2)
- ___ Drift Deposits (B3)
- ___ Algal Mat or Crust (B4)
- ___ Iron Deposits (B5)
- ___ Inundation Visible on Aerial Imagery (B7)
- ___ Water-Stained Leaves (B9)
- ___ Aquatic Fauna (B13)
- ___ True Aquatic Plants (B14)
- ___ Hydrogen Sulfide Odor (C1)
- ___ Oxidized Rhizospheres on Living Roots (C3)
- ___ Presence of Reduced Iron (C4)
- ___ Recent Iron Reduction in Tilled Soils (C6)
- ___ Thin Muck Surface (C7)
- ___ Other (Explain in Remarks)

Secondary Indicators (minimum of two required)

- ___ Surface Soil Cracks (B6)
- ___ Sparsely Vegetated Concave Surface (B8)
- ___ Drainage Patterns (B10)
- ___ Moss Trim Lines (B16)
- ___ Dry-Season Water Table (C2)
- ___ Crayfish Burrows (C8)
- ___ Saturation Visible on Aerial Imagery (C9)
- ___ Stunted or Stressed Plants (D1)
- ___ Geomorphic Position (D2)
- ___ Shallow Aquitard (D3)
- ___ Microtopographic Relief (D4)
- ___ FAC-Neutral Test (D5)

Field Observations:

Surface Water Present?	Yes ___	No ✓	Depth (inches): ____
Water Table Present?	Yes ___	No ✓	Depth (inches): ____
Saturation Present? (includes capillary fringe)	Yes ___	No ✓	Depth (inches): ____

Wetland Hydrology Present? **Yes** ___ **No** ✓

Describe Recorded Data (stream gauge, monitoring well, aerial photos, previous inspections), if available:

Remarks:

No wetland hydrology indicators are present.

VEGETATION (Four Strata) – Use scientific names of plants.

Sampling Point: DP1

Tree Stratum (Plot size: _____)	Absolute % Cover	Dominant Species?	Indicator Status
1.			
2.			
3.			
4.			
5.			
6.			
7.			
8.			
	0 = Total Cover		
50% of total cover: 0	20% of total cover: 0		

Sapling/Shrub Stratum (Plot size: _____)			
1.			
2.			
3.			
4.			
5.			
6.			
7.			
8.			
	0 = Total Cover		
50% of total cover: 0	20% of total cover: 0		

Herb Stratum (Plot size: _____)			
1. *Apocynum cannabinum*	5	No	FACU
2. *Dichanthelium clandestinum*	25	Yes	FAC
3. *Glechoma hederacea*	10	No	FACU
4. *Symphyotrichum lateriflorum*	15	Yes	FACW
5. *Artemesia vulgaris*	10	No	UPL
6. *Microstegium vimineum*	10	No	FAC
7. *Rosa Multiflora*	10	No	FACU
8. *Rubus allegheniensis*	5	No	FACU
9.			
10.			
11.			
12.			
	90 = Total Cover		
50% of total cover: 45	20% of total cover: 18		

Woody Vine Stratum (Plot size: _____)			
1.			
2.			
3.			
4.			
5.			
	0 = Total Cover		
50% of total cover: 0	20% of total cover: 0		

Dominance Test worksheet:

Number of Dominant Species That Are OBL, FACW, or FAC: 2 (A)

Total Number of Dominant Species Across All Strata: 2 (B)

Percent of Dominant Species That Are OBL, FACW, or FAC: 100.00 (A/B)

Prevalence Index worksheet:

Total % Cover of:		Multiply by:	
OBL species	0	x 1 =	0
FACW species	15	x 2 =	30
FAC species	35	x 3 =	105
FACU species	30	x 4 =	120
UPL species	10	x 5 =	50
Column Totals:	90 (A)		305 (B)

Prevalence Index = B/A = 3.39

Hydrophytic Vegetation Indicators:

___ 1 - Rapid Test for Hydrophytic Vegetation

___ 2 - Dominance Test is >50%

___ 3 - Prevalence Index is ≤3.0[1]

___ Problematic Hydrophytic Vegetation[1] (Explain)

[1]Indicators of hydric soil and wetland hydrology must be present, unless disturbed or problematic.

Definitions of Four Vegetation Strata:

Tree – Woody plants, excluding vines, 3 in. (7.6 cm) or more in diameter at breast height (DBH), regardless of height.

Sapling/Shrub – Woody plants, excluding vines, less than 3 in. DBH and greater than 3.28 ft (1 m) tall.

Herb – All herbaceous (non-woody) plants, regardless of size, and woody plants less than 3.28 ft tall.

Woody vine – All woody vines greater than 3.28 ft in height.

Hydrophytic Vegetation Present? Yes _____ No ✓

Remarks: (If observed, list morphological adaptations below).

SOIL

Sampling Point: DP1

Profile Description: (Describe to the depth needed to document the indicator or confirm the absence of indicators.)

Depth (inches)	Matrix Color (moist)	Matrix %	Redox Features Color (moist)	Redox Features %	Type[1]	Loc[2]	Texture	Remarks
0-2	10YR 3/3	100					L	
2-5	10YR 5/4	100					L	
5-18	10YR 3/4	80	10YR 4/1	10			L	
			7.5YR 4/6	10			L	

[1]Type: C=Concentration, D=Depletion, RM=Reduced Matrix, MS=Masked Sand Grains. [2]Location: PL=Pore Lining, M=Matrix.

Hydric Soil Indicators:

___ Histosol (A1)
___ Histic Epipedon (A2)
___ Black Histic (A3)
___ Hydrogen Sulfide (A4)
___ Stratified Layers (A5)
___ 2 cm Muck (A10) **(LRR N)**
___ Depleted Below Dark Surface (A11)
___ Thick Dark Surface (A12)
___ Sandy Mucky Mineral (S1) **(LRR N, MLRA 147, 148)**
___ Sandy Gleyed Matrix (S4)
___ Sandy Redox (S5)
___ Stripped Matrix (S6)
___ Dark Surface (S7)
___ Polyvalue Below Surface (S8) **(MLRA 147, 148)**
___ Thin Dark Surface (S9) **(MLRA 147, 148)**
___ Loamy Gleyed Matrix (F2)
___ Depleted Matrix (F3)
___ Redox Dark Surface (F6)
___ Depleted Dark Surface (F7)
___ Redox Depressions (F8)
___ Iron-Manganese Masses (F12) **(LRR N, MLRA 136)**
___ Umbric Surface (F13) **(MLRA 136, 122)**
___ Piedmont Floodplain Soils (F19) **(MLRA 148)**
___ Red Parent Material (F21) **(MLRA 127, 147)**

Indicators for Problematic Hydric Soils[3]:

___ 2 cm Muck (A10) **(MLRA 147)**
___ Coast Prairie Redox (A16) **(MLRA 147, 148)**
___ Piedmont Floodplain Soils (F19) **(MLRA 136, 147)**
___ Very Shallow Dark Surface (TF12)
___ Other (Explain in Remarks)

[3]Indicators of hydrophytic vegetation and wetland hydrology must be present, unless disturbed or problematic.

Restrictive Layer (if observed):

Type:

Depth (inches):

Hydric Soil Present? **Yes** ☐ **No** ☑

Remarks:

Feature Sketch: Indicate North, CL and Survey Corridor, Photo Locations

Sampling Point: DP1

Feature Photo: Facing - __N __S __E __W __NE __NW __SE __SW

WETLAND DETERMINATION DATA FORM – Eastern Mountains and Piedmont

Project/Site: Paoli Pike Gate Blowdown City/County: Chester Sampling Date: 2/27/18

Applicant/Owner: Adelphia State: PA Sampling Point: DP1

Investigator(s): NV5- Scott Angus, Ethan Muller Section, Township, Range: Malvern

Landform (hillslope, terrace, etc.): Floodplain wetland Local relief (concave, convex, none): None Slope (%): 0

Subregion (LRR or MLRA): LRRS Lat: 39.990924º Long: -75.54972º Datum: ____

Soil Map Unit Name: Ha Hatboro NWI classification: NA

Are climatic / hydrologic conditions on the site typical for this time of year? Yes ✓ No ___ (If no, explain in Remarks.)

Are Vegetation ✓, Soil ___, or Hydrology ___ significantly disturbed? Are "Normal Circumstances" present? Yes ___ No ✓

Are Vegetation ___, Soil ___, or Hydrology ___ naturally problematic? (If needed, explain any answers in Remarks.)

SUMMARY OF FINDINGS – Attach site map showing sampling point locations, transects, important features, etc.

Hydrophytic Vegetation Present?	Yes ✓	No ___	**Is the Sampled Area within a Wetland?** **Yes** ✓ **No** ___
Hydric Soil Present?	Yes ✓	No ___	
Wetland Hydrology Present?	Yes ✓	No ___	

Remarks:
Maintained (mowed) vegetation within ROW.
PP-W-01

HYDROLOGY

Wetland Hydrology Indicators:

Primary Indicators (minimum of one is required; check all that apply)

- ✓ Surface Water (A1)
- ___ High Water Table (A2)
- ___ Saturation (A3)
- ___ Water Marks (B1)
- ___ Sediment Deposits (B2)
- ___ Drift Deposits (B3)
- ___ Algal Mat or Crust (B4)
- ___ Iron Deposits (B5)
- ___ Inundation Visible on Aerial Imagery (B7)
- ✓ Water-Stained Leaves (B9)
- ___ Aquatic Fauna (B13)
- ___ True Aquatic Plants (B14)
- ___ Hydrogen Sulfide Odor (C1)
- ✓ Oxidized Rhizospheres on Living Roots (C3)
- ___ Presence of Reduced Iron (C4)
- ___ Recent Iron Reduction in Tilled Soils (C6)
- ___ Thin Muck Surface (C7)
- ___ Other (Explain in Remarks)

Secondary Indicators (minimum of two required)

- ___ Surface Soil Cracks (B6)
- ___ Sparsely Vegetated Concave Surface (B8)
- ___ Drainage Patterns (B10)
- ___ Moss Trim Lines (B16)
- ___ Dry-Season Water Table (C2)
- ___ Crayfish Burrows (C8)
- ___ Saturation Visible on Aerial Imagery (C9)
- ___ Stunted or Stressed Plants (D1)
- ___ Geomorphic Position (D2)
- ___ Shallow Aquitard (D3)
- ___ Microtopographic Relief (D4)
- ___ FAC-Neutral Test (D5)

Field Observations:

Surface Water Present?	Yes ✓	No ___	Depth (inches): 1"
Water Table Present?	Yes ✓	No ___	Depth (inches): surface
Saturation Present? (includes capillary fringe)	Yes ✓	No ___	Depth (inches): Surface

Wetland Hydrology Present? **Yes** ✓ **No** ___

Describe Recorded Data (stream gauge, monitoring well, aerial photos, previous inspections), if available:

Remarks:

VEGETATION (Four Strata) – Use scientific names of plants.

Sampling Point: DP1

Tree Stratum (Plot size: _____)	Absolute % Cover	Dominant Species?	Indicator Status
1.			
2.			
3.			
4.			
5.			
6.			
7.			
8.			
	0 = Total Cover		
50% of total cover: 0	20% of total cover: 0		

Sapling/Shrub Stratum (Plot size: _____)			
1.			
2.			
3.			
4.			
5.			
6.			
7.			
8.			
	0 = Total Cover		
50% of total cover: 0	20% of total cover: 0		

Herb Stratum (Plot size: _____)			
1. *Carex stricta*	50	Yes	OBL
2. *Symplocarpus foetidus*	15	Yes	OBL
3. *Verbena hastata*	5	No	FACW
4. *Juncus effusus*	15	Yes	FACW
5. *Veronia noveboracensis*	5	No	FACW
6. *Carex annectens*	5	No	FACW
7. *Typha latifolia*	5	No	OBL
8.			
9.			
10.			
11.			
12.			
	100 = Total Cover		
50% of total cover: 50	20% of total cover: 20		

Woody Vine Stratum (Plot size: _____)			
1.			
2.			
3.			
4.			
5.			
	0 = Total Cover		
50% of total cover: 0	20% of total cover: 0		

Dominance Test worksheet:

Number of Dominant Species That Are OBL, FACW, or FAC: 3 (A)

Total Number of Dominant Species Across All Strata: 3 (B)

Percent of Dominant Species That Are OBL, FACW, or FAC: 100.00 (A/B)

Prevalence Index worksheet:

Total % Cover of:		Multiply by:	
OBL species	70	x 1 =	70
FACW species	30	x 2 =	60
FAC species	0	x 3 =	0
FACU species	0	x 4 =	0
UPL species	0	x 5 =	0
Column Totals:	100 (A)		130 (B)

Prevalence Index = B/A = 1.30

Hydrophytic Vegetation Indicators:

✓ 1 - Rapid Test for Hydrophytic Vegetation

✓ 2 - Dominance Test is >50%

✓ 3 - Prevalence Index is ≤3.0[1]

___ Problematic Hydrophytic Vegetation[1] (Explain)

[1]Indicators of hydric soil and wetland hydrology must be present, unless disturbed or problematic.

Definitions of Four Vegetation Strata:

Tree – Woody plants, excluding vines, 3 in. (7.6 cm) or more in diameter at breast height (DBH), regardless of height.

Sapling/Shrub – Woody plants, excluding vines, less than 3 in. DBH and greater than 3.28 ft (1 m) tall.

Herb – All herbaceous (non-woody) plants, regardless of size, and woody plants less than 3.28 ft tall.

Woody vine – All woody vines greater than 3.28 ft in height.

Hydrophytic Vegetation Present? Yes ✓ No ____

Remarks: (If observed, list morphological adaptations below).

SOIL

Sampling Point: DP1

Profile Description: (Describe to the depth needed to document the indicator or confirm the absence of indicators.)

Depth (inches)	Matrix Color (moist)	Matrix %	Redox Features Color (moist)	Redox Features %	Type[1]	Loc[2]	Texture	Remarks
0-2	10YR 3/1	100					SCL	
2-22	10YR 5/1	85	5YR 4/6	10	D	M	SCL	
			5YR 5/8	5	C	PL	SCL	

[1]Type: C=Concentration, D=Depletion, RM=Reduced Matrix, MS=Masked Sand Grains. [2]Location: PL=Pore Lining, M=Matrix.

Hydric Soil Indicators:

- ___ Histosol (A1)
- ___ Histic Epipedon (A2)
- ___ Black Histic (A3)
- ___ Hydrogen Sulfide (A4)
- ___ Stratified Layers (A5)
- ___ 2 cm Muck (A10) **(LRR N)**
- ✓ Depleted Below Dark Surface (A11)
- ✓ Thick Dark Surface (A12)
- ___ Sandy Mucky Mineral (S1) **(LRR N, MLRA 147, 148)**
- ___ Sandy Gleyed Matrix (S4)
- ___ Sandy Redox (S5)
- ___ Stripped Matrix (S6)
- ___ Dark Surface (S7)
- ___ Polyvalue Below Surface (S8) **(MLRA 147, 148)**
- ___ Thin Dark Surface (S9) **(MLRA 147, 148)**
- ___ Loamy Gleyed Matrix (F2)
- ✓ Depleted Matrix (F3)
- ___ Redox Dark Surface (F6)
- ___ Depleted Dark Surface (F7)
- ___ Redox Depressions (F8)
- ___ Iron-Manganese Masses (F12) **(LRR N, MLRA 136)**
- ___ Umbric Surface (F13) **(MLRA 136, 122)**
- ___ Piedmont Floodplain Soils (F19) **(MLRA 148)**
- ___ Red Parent Material (F21) **(MLRA 127, 147)**

Indicators for Problematic Hydric Soils[3]:

- ___ 2 cm Muck (A10) **(MLRA 147)**
- ___ Coast Prairie Redox (A16) **(MLRA 147, 148)**
- ___ Piedmont Floodplain Soils (F19) **(MLRA 136, 147)**
- ___ Very Shallow Dark Surface (TF12)
- ___ Other (Explain in Remarks)

[3]Indicators of hydrophytic vegetation and wetland hydrology must be present, unless disturbed or problematic.

Restrictive Layer (if observed):

Type:

Depth (inches):

Hydric Soil Present? Yes ✓ No ☐

Remarks:

Pa_SB1 in GPS

Feature Sketch: Indicate North, CL and Survey Corridor, Photo Locations

Sampling Point: DP1

Feature Photo: Facing - __N __S __E __W __NE __NW __SE __SW

WETLAND DETERMINATION DATA FORM – Eastern Mountains and Piedmont

Project/Site: Paoli Pike Gate Blowdown City/County: Chester Sampling Date: 2/27/18

Applicant/Owner: Adelphia State: PA Sampling Point: DP2

Investigator(s): NV5- Scott Angus, Ethan Muller Section, Township, Range: Malvern

Landform (hillslope, terrace, etc.): Road embankment Local relief (concave, convex, none): None Slope (%): 30

Subregion (LRR or MLRA): LRRS Lat: 39.990861º Long: -75.54956º Datum: _____

Soil Map Unit Name: Ha Hatboro NWI classification: NA

Are climatic / hydrologic conditions on the site typical for this time of year? Yes ✓ No ___ (If no, explain in Remarks.)

Are Vegetation ✓, Soil ___, or Hydrology ___ significantly disturbed? Are "Normal Circumstances" present? Yes ___ No ✓

Are Vegetation ___, Soil ___, or Hydrology ___ naturally problematic? (If needed, explain any answers in Remarks.)

SUMMARY OF FINDINGS – Attach site map showing sampling point locations, transects, important features, etc.

Hydrophytic Vegetation Present?	Yes ___	No ✓	**Is the Sampled Area within a Wetland?** Yes ___ No ✓
Hydric Soil Present?	Yes ___	No ✓	
Wetland Hydrology Present?	Yes ___	No ✓	

Remarks:

Mowed vegetation within ROW.

HYDROLOGY

Wetland Hydrology Indicators:

Primary Indicators (minimum of one is required; check all that apply)

- ___ Surface Water (A1)
- ___ High Water Table (A2)
- ___ Saturation (A3)
- ___ Water Marks (B1)
- ___ Sediment Deposits (B2)
- ___ Drift Deposits (B3)
- ___ Algal Mat or Crust (B4)
- ___ Iron Deposits (B5)
- ___ Inundation Visible on Aerial Imagery (B7)
- ___ Water-Stained Leaves (B9)
- ___ Aquatic Fauna (B13)
- ___ True Aquatic Plants (B14)
- ___ Hydrogen Sulfide Odor (C1)
- ___ Oxidized Rhizospheres on Living Roots (C3)
- ___ Presence of Reduced Iron (C4)
- ___ Recent Iron Reduction in Tilled Soils (C6)
- ___ Thin Muck Surface (C7)
- ___ Other (Explain in Remarks)

Secondary Indicators (minimum of two required)

- ___ Surface Soil Cracks (B6)
- ___ Sparsely Vegetated Concave Surface (B8)
- ___ Drainage Patterns (B10)
- ___ Moss Trim Lines (B16)
- ___ Dry-Season Water Table (C2)
- ___ Crayfish Burrows (C8)
- ___ Saturation Visible on Aerial Imagery (C9)
- ___ Stunted or Stressed Plants (D1)
- ___ Geomorphic Position (D2)
- ___ Shallow Aquitard (D3)
- ___ Microtopographic Relief (D4)
- ___ FAC-Neutral Test (D5)

Field Observations:

Surface Water Present?	Yes ___	No ✓	Depth (inches): _____
Water Table Present?	Yes ___	No ✓	Depth (inches): _____
Saturation Present? (includes capillary fringe)	Yes ___	No ✓	Depth (inches): _____

Wetland Hydrology Present? Yes ___ No ✓

Describe Recorded Data (stream gauge, monitoring well, aerial photos, previous inspections), if available:

Remarks:

No wetland hydrology indicators are present.

VEGETATION (Four Strata) – Use scientific names of plants.

Sampling Point: DP2

Tree Stratum (Plot size: _____)	Absolute % Cover	Dominant Species?	Indicator Status
1.			
2.			
3.			
4.			
5.			
6.			
7.			
8.			
	0 = Total Cover		
50% of total cover: 0	20% of total cover: 0		

Sapling/Shrub Stratum (Plot size: _____)			
1.			
2.			
3.			
4.			
5.			
6.			
7.			
8.			
	0 = Total Cover		
50% of total cover: 0	20% of total cover: 0		

Herb Stratum (Plot size: _____)			
1. *Apocynum cannabinum*	10	No	FACU
2. *Oenothera biennis*	15	Yes	FACU
3. *Phleum pratense*	30	Yes	FACU
4. *Verbascum thapsus*	5	No	FACU
5. *Plantago lanceolota*	10	No	UPL
6. *Dipsacus fullonum*	10	No	FACU
7. *Brassica rapa*	5	No	UPL
8. *rock / gravel*	15		
9.			
10.			
11.			
12.			
	100 = Total Cover		
50% of total cover: 50	20% of total cover: 20		

Woody Vine Stratum (Plot size: _____)			
1.			
2.			
3.			
4.			
5.			
	0 = Total Cover		
50% of total cover: 0	20% of total cover: 0		

Dominance Test worksheet:

Number of Dominant Species That Are OBL, FACW, or FAC: 0 (A)

Total Number of Dominant Species Across All Strata: 2 (B)

Percent of Dominant Species That Are OBL, FACW, or FAC: 0.00 (A/B)

Prevalence Index worksheet:

Total % Cover of:		Multiply by:	
OBL species	0	x 1 =	0
FACW species	0	x 2 =	0
FAC species	0	x 3 =	0
FACU species	75	x 4 =	300
UPL species	10	x 5 =	50
Column Totals:	85 (A)		350 (B)

Prevalence Index = B/A = 4.12

Hydrophytic Vegetation Indicators:

___ 1 - Rapid Test for Hydrophytic Vegetation

___ 2 - Dominance Test is >50%

___ 3 - Prevalence Index is ≤3.0[1]

___ Problematic Hydrophytic Vegetation[1] (Explain)

[1]Indicators of hydric soil and wetland hydrology must be present, unless disturbed or problematic.

Definitions of Four Vegetation Strata:

Tree – Woody plants, excluding vines, 3 in. (7.6 cm) or more in diameter at breast height (DBH), regardless of height.

Sapling/Shrub – Woody plants, excluding vines, less than 3 in. DBH and greater than 3.28 ft (1 m) tall.

Herb – All herbaceous (non-woody) plants, regardless of size, and woody plants less than 3.28 ft tall.

Woody vine – All woody vines greater than 3.28 ft in height.

Hydrophytic Vegetation Present? Yes _____ No ✓

Remarks: (If observed, list morphological adaptations below).

SOIL

Sampling Point: DP2

Profile Description: (Describe to the depth needed to document the indicator or confirm the absence of indicators.)

Depth (inches)	Matrix Color (moist)	Matrix %	Redox Features Color (moist)	Redox Features %	Type[1]	Loc[2]	Texture	Remarks
0-4	7.5YR 2.5/1	100					L	with gravel
	Refusal / gravel							

[1]Type: C=Concentration, D=Depletion, RM=Reduced Matrix, MS=Masked Sand Grains. [2]Location: PL=Pore Lining, M=Matrix.

Hydric Soil Indicators:

- ___ Histosol (A1)
- ___ Histic Epipedon (A2)
- ___ Black Histic (A3)
- ___ Hydrogen Sulfide (A4)
- ___ Stratified Layers (A5)
- ___ 2 cm Muck (A10) **(LRR N)**
- ___ Depleted Below Dark Surface (A11)
- ___ Thick Dark Surface (A12)
- ___ Sandy Mucky Mineral (S1) **(LRR N, MLRA 147, 148)**
- ___ Sandy Gleyed Matrix (S4)
- ___ Sandy Redox (S5)
- ___ Stripped Matrix (S6)
- ___ Dark Surface (S7)
- ___ Polyvalue Below Surface (S8) **(MLRA 147, 148)**
- ___ Thin Dark Surface (S9) **(MLRA 147, 148)**
- ___ Loamy Gleyed Matrix (F2)
- ___ Depleted Matrix (F3)
- ___ Redox Dark Surface (F6)
- ___ Depleted Dark Surface (F7)
- ___ Redox Depressions (F8)
- ___ Iron-Manganese Masses (F12) **(LRR N, MLRA 136)**
- ___ Umbric Surface (F13) **(MLRA 136, 122)**
- ___ Piedmont Floodplain Soils (F19) **(MLRA 148)**
- ___ Red Parent Material (F21) **(MLRA 127, 147)**

Indicators for Problematic Hydric Soils[3]:

- ___ 2 cm Muck (A10) **(MLRA 147)**
- ___ Coast Prairie Redox (A16) **(MLRA 147, 148)**
- ___ Piedmont Floodplain Soils (F19) **(MLRA 136, 147)**
- ___ Very Shallow Dark Surface (TF12)
- ___ Other (Explain in Remarks)

[3]Indicators of hydrophytic vegetation and wetland hydrology must be present, unless disturbed or problematic.

Restrictive Layer (if observed):

Type:

Depth (inches):

Hydric Soil Present? **Yes** ☐ **No** ☑

Remarks:

Pa_SB2 in GPS

Feature Sketch: Indicate North, CL and Survey Corridor, Photo Locations

Sampling Point: DP2

Feature Photo: Facing - __N __S __E __W __NE __NW __SE __SW

WETLAND DETERMINATION DATA FORM – Eastern Mountains and Piedmont

Project/Site: Perkiomen Creek Gate Blowdown City/County: Montgomery Sampling Date: 3/1/18

Applicant/Owner: Adelphia State: PA Sampling Point: DP1

Investigator(s): NV5- Scott Angus, Ethan Muller Section, Township, Range: Perkiomen

Landform (hillslope, terrace, etc.): Terrace Local relief (concave, convex, none): None Slope (%): 3

Subregion (LRR or MLRA): LRRS Lat: 40.216388º Long: -75.453608º Datum: _____

Soil Map Unit Name: Bo Bowmansville NWI classification: NA

Are climatic / hydrologic conditions on the site typical for this time of year? Yes ✓ No ___ (If no, explain in Remarks.)

Are Vegetation ✓, Soil ___, or Hydrology ___ significantly disturbed? Are "Normal Circumstances" present? Yes ___ No ✓

Are Vegetation ___, Soil ___, or Hydrology ___ naturally problematic? (If needed, explain any answers in Remarks.)

SUMMARY OF FINDINGS – Attach site map showing sampling point locations, transects, important features, etc.

Hydrophytic Vegetation Present?	Yes ✓	No ___	**Is the Sampled Area within a Wetland?** **Yes** ✓ **No** ___
Hydric Soil Present?	Yes ✓	No ___	
Wetland Hydrology Present?	Yes ✓	No ___	

Remarks:

Mowed vegetation within ROW
PC-W-01

HYDROLOGY

Wetland Hydrology Indicators:

Primary Indicators (minimum of one is required; check all that apply)

- ✓ Surface Water (A1)
- ___ High Water Table (A2)
- ✓ Saturation (A3)
- ___ Water Marks (B1)
- ___ Sediment Deposits (B2)
- ___ Drift Deposits (B3)
- ___ Algal Mat or Crust (B4)
- ___ Iron Deposits (B5)
- ___ Inundation Visible on Aerial Imagery (B7)
- ___ Water-Stained Leaves (B9)
- ___ Aquatic Fauna (B13)
- ✓ True Aquatic Plants (B14)
- ___ Hydrogen Sulfide Odor (C1)
- ___ Oxidized Rhizospheres on Living Roots (C3)
- ___ Presence of Reduced Iron (C4)
- ___ Recent Iron Reduction in Tilled Soils (C6)
- ___ Thin Muck Surface (C7)
- ___ Other (Explain in Remarks)

Secondary Indicators (minimum of two required)

- ___ Surface Soil Cracks (B6)
- ___ Sparsely Vegetated Concave Surface (B8)
- ___ Drainage Patterns (B10)
- ___ Moss Trim Lines (B16)
- ___ Dry-Season Water Table (C2)
- ___ Crayfish Burrows (C8)
- ___ Saturation Visible on Aerial Imagery (C9)
- ___ Stunted or Stressed Plants (D1)
- ___ Geomorphic Position (D2)
- ___ Shallow Aquitard (D3)
- ___ Microtopographic Relief (D4)
- ___ FAC-Neutral Test (D5)

Field Observations:

Surface Water Present?	Yes ✓	No ___	Depth (inches): 1"
Water Table Present?	Yes ___	No ✓	Depth (inches): ___
Saturation Present? (includes capillary fringe)	Yes ✓	No ___	Depth (inches): Surface

Wetland Hydrology Present? **Yes** ✓ **No** ___

Describe Recorded Data (stream gauge, monitoring well, aerial photos, previous inspections), if available:

Remarks:

VEGETATION (Four Strata) – Use scientific names of plants.

Sampling Point: DP1

Tree Stratum (Plot size: _____)	Absolute % Cover	Dominant Species?	Indicator Status
1.			
2.			
3.			
4.			
5.			
6.			
7.			
8.			
	0 = Total Cover		
50% of total cover: 0	20% of total cover: 0		

Sapling/Shrub Stratum (Plot size: _____)			
1.			
2.			
3.			
4.			
5.			
6.			
7.			
8.			
	0 = Total Cover		
50% of total cover: 0	20% of total cover: 0		

Herb Stratum (Plot size: _____)			
1. *Mowed lawn grasses*	40	Yes	
2. *Phalaris arundinacea*	50	Yes	FACW
3. *Poa palustris*	10	No	FACW
4.			
5.			
6.			
7.			
8.			
9.			
10.			
11.			
12.			
	100 = Total Cover		
50% of total cover: 50	20% of total cover: 20		

Woody Vine Stratum (Plot size: _____)			
1.			
2.			
3.			
4.			
5.			
	0 = Total Cover		
50% of total cover: 0	20% of total cover: 0		

Dominance Test worksheet:

Number of Dominant Species That Are OBL, FACW, or FAC: 1 (A)

Total Number of Dominant Species Across All Strata: 2 (B)

Percent of Dominant Species That Are OBL, FACW, or FAC: 50.00 (A/B)

Prevalence Index worksheet:

Total % Cover of:		Multiply by:	
OBL species	0	x 1 =	0
FACW species	60	x 2 =	120
FAC species	0	x 3 =	0
FACU species	0	x 4 =	0
UPL species	0	x 5 =	0
Column Totals:	60 (A)		120 (B)

Prevalence Index = B/A = 2.00

Hydrophytic Vegetation Indicators:

✓ 1 - Rapid Test for Hydrophytic Vegetation

✓ 2 - Dominance Test is >50%

✓ 3 - Prevalence Index is ≤3.0[1]

___ Problematic Hydrophytic Vegetation[1] (Explain)

[1]Indicators of hydric soil and wetland hydrology must be present, unless disturbed or problematic.

Definitions of Four Vegetation Strata:

Tree – Woody plants, excluding vines, 3 in. (7.6 cm) or more in diameter at breast height (DBH), regardless of height.

Sapling/Shrub – Woody plants, excluding vines, less than 3 in. DBH and greater than 3.28 ft (1 m) tall.

Herb – All herbaceous (non-woody) plants, regardless of size, and woody plants less than 3.28 ft tall.

Woody vine – All woody vines greater than 3.28 ft in height.

Hydrophytic Vegetation Present? Yes ✓ No _____

Remarks: (If observed, list morphological adaptations below).

SOIL

Sampling Point: DP1

Profile Description: (Describe to the depth needed to document the indicator or confirm the absence of indicators.)

Depth (inches)	Matrix Color (moist)	Matrix %	Redox Features Color (moist)	Redox Features %	Type[1]	Loc[2]	Texture	Remarks
0-18	2.5YR 4/2	80	2.5YR 5/4	20	C	M	SCL	

[1]Type: C=Concentration, D=Depletion, RM=Reduced Matrix, MS=Masked Sand Grains. [2]Location: PL=Pore Lining, M=Matrix.

Hydric Soil Indicators:

- ___ Histosol (A1)
- ___ Histic Epipedon (A2)
- ___ Black Histic (A3)
- ___ Hydrogen Sulfide (A4)
- ___ Stratified Layers (A5)
- ___ 2 cm Muck (A10) **(LRR N)**
- ___ Depleted Below Dark Surface (A11)
- ___ Thick Dark Surface (A12)
- ___ Sandy Mucky Mineral (S1) **(LRR N, MLRA 147, 148)**
- ___ Sandy Gleyed Matrix (S4)
- ___ Sandy Redox (S5)
- ___ Stripped Matrix (S6)
- ✓ Dark Surface (S7)
- ___ Polyvalue Below Surface (S8) **(MLRA 147, 148)**
- ___ Thin Dark Surface (S9) **(MLRA 147, 148)**
- ___ Loamy Gleyed Matrix (F2)
- ✓ Depleted Matrix (F3)
- ___ Redox Dark Surface (F6)
- ___ Depleted Dark Surface (F7)
- ___ Redox Depressions (F8)
- ___ Iron-Manganese Masses (F12) **(LRR N, MLRA 136)**
- ___ Umbric Surface (F13) **(MLRA 136, 122)**
- ___ Piedmont Floodplain Soils (F19) **(MLRA 148)**
- ✓ Red Parent Material (F21) **(MLRA 127, 147)**

Indicators for Problematic Hydric Soils[3]:

- ___ 2 cm Muck (A10) **(MLRA 147)**
- ___ Coast Prairie Redox (A16) **(MLRA 147, 148)**
- ___ Piedmont Floodplain Soils (F19) **(MLRA 136, 147)**
- ___ Very Shallow Dark Surface (TF12)
- ___ Other (Explain in Remarks)

[3]Indicators of hydrophytic vegetation and wetland hydrology must be present, unless disturbed or problematic.

Restrictive Layer (if observed):

Type:

Depth (inches):

Hydric Soil Present? Yes ✓ No ☐

Remarks:

Pe_SB1 in GPS

Feature Sketch: Indicate North, CL and Survey Corridor, Photo Locations

Sampling Point: DP1

Feature Photo: Facing - __N __S __E __W __NE __NW __SE __SW

WETLAND DETERMINATION DATA FORM – Eastern Mountains and Piedmont

Project/Site: Perkiomen Creek Gate Blowdown City/County: Montgomery Sampling Date: 3/1/18

Applicant/Owner: Adelphia State: PA Sampling Point: DP2

Investigator(s): NV5- Scott Angus, Ethan Muller Section, Township, Range: Perkiomen

Landform (hillslope, terrace, etc.): Terrace Local relief (concave, convex, none): None Slope (%): 5

Subregion (LRR or MLRA): LRRS Lat: 40.216286º Long: -75.453873º Datum: _____

Soil Map Unit Name: Bo Bowmansville NWI classification: NA

Are climatic / hydrologic conditions on the site typical for this time of year? Yes ✓ No ☐ (If no, explain in Remarks.)

Are Vegetation ✓, Soil _____, or Hydrology _____ significantly disturbed? Are "Normal Circumstances" present? Yes ☐ No ✓

Are Vegetation _____, Soil _____, or Hydrology _____ naturally problematic? (If needed, explain any answers in Remarks.)

SUMMARY OF FINDINGS – Attach site map showing sampling point locations, transects, important features, etc.

Hydrophytic Vegetation Present?	Yes ☐	No ✓	**Is the Sampled Area within a Wetland?** Yes ☐ No ✓
Hydric Soil Present?	Yes ☐	No ✓	
Wetland Hydrology Present?	Yes ☐	No ✓	

Remarks:

Mowed vegetation within ROW.

HYDROLOGY

Wetland Hydrology Indicators:

Primary Indicators (minimum of one is required; check all that apply)

- ___ Surface Water (A1)
- ___ High Water Table (A2)
- ___ Saturation (A3)
- ___ Water Marks (B1)
- ___ Sediment Deposits (B2)
- ___ Drift Deposits (B3)
- ___ Algal Mat or Crust (B4)
- ___ Iron Deposits (B5)
- ___ Inundation Visible on Aerial Imagery (B7)
- ___ Water-Stained Leaves (B9)
- ___ Aquatic Fauna (B13)
- ___ True Aquatic Plants (B14)
- ___ Hydrogen Sulfide Odor (C1)
- ___ Oxidized Rhizospheres on Living Roots (C3)
- ___ Presence of Reduced Iron (C4)
- ___ Recent Iron Reduction in Tilled Soils (C6)
- ___ Thin Muck Surface (C7)
- ___ Other (Explain in Remarks)

Secondary Indicators (minimum of two required)

- ___ Surface Soil Cracks (B6)
- ___ Sparsely Vegetated Concave Surface (B8)
- ___ Drainage Patterns (B10)
- ___ Moss Trim Lines (B16)
- ___ Dry-Season Water Table (C2)
- ___ Crayfish Burrows (C8)
- ___ Saturation Visible on Aerial Imagery (C9)
- ___ Stunted or Stressed Plants (D1)
- ___ Geomorphic Position (D2)
- ___ Shallow Aquitard (D3)
- ___ Microtopographic Relief (D4)
- ___ FAC-Neutral Test (D5)

Field Observations:

Surface Water Present?	Yes ☐	No ✓	Depth (inches): _____
Water Table Present?	Yes ☐	No ✓	Depth (inches): _____
Saturation Present? (includes capillary fringe)	Yes ☐	No ✓	Depth (inches): _____

Wetland Hydrology Present? Yes ☐ No ✓

Describe Recorded Data (stream gauge, monitoring well, aerial photos, previous inspections), if available:

Remarks:

No wetland hydrology indicators are present.

VEGETATION (Four Strata) – Use scientific names of plants.

Sampling Point: DP2

Tree Stratum (Plot size: _____)	Absolute % Cover	Dominant Species?	Indicator Status
1.			
2.			
3.			
4.			
5.			
6.			
7.			
8.			
	0 = Total Cover		
50% of total cover: 0	20% of total cover: 0		

Sapling/Shrub Stratum (Plot size: _____)			
1.			
2.			
3.			
4.			
5.			
6.			
7.			
8.			
	0 = Total Cover		
50% of total cover: 0	20% of total cover: 0		

Herb Stratum (Plot size: _____)			
1. *Mowed lawn grasses*	100		
2.			
3.			
4.			
5.			
6.			
7.			
8.			
9.			
10.			
11.			
12.			
	100 = Total Cover		
50% of total cover: 50	20% of total cover: 20		

Woody Vine Stratum (Plot size: _____)			
1.			
2.			
3.			
4.			
5.			
	0 = Total Cover		
50% of total cover: 0	20% of total cover: 0		

Dominance Test worksheet:

Number of Dominant Species That Are OBL, FACW, or FAC: _____ (A)

Total Number of Dominant Species Across All Strata: _____ (B)

Percent of Dominant Species That Are OBL, FACW, or FAC: _____ (A/B)

Prevalence Index worksheet:

Total % Cover of:		Multiply by:
OBL species		x 1 = 0
FACW species		x 2 = 0
FAC species		x 3 = 0
FACU species		x 4 = 0
UPL species		x 5 = 0
Column Totals:	0 (A)	0 (B)

Prevalence Index = B/A = _____

Hydrophytic Vegetation Indicators:

___ 1 - Rapid Test for Hydrophytic Vegetation

___ 2 - Dominance Test is >50%

___ 3 - Prevalence Index is ≤3.0[1]

___ Problematic Hydrophytic Vegetation[1] (Explain)

[1]Indicators of hydric soil and wetland hydrology must be present, unless disturbed or problematic.

Definitions of Four Vegetation Strata:

Tree – Woody plants, excluding vines, 3 in. (7.6 cm) or more in diameter at breast height (DBH), regardless of height.

Sapling/Shrub – Woody plants, excluding vines, less than 3 in. DBH and greater than 3.28 ft (1 m) tall.

Herb – All herbaceous (non-woody) plants, regardless of size, and woody plants less than 3.28 ft tall.

Woody vine – All woody vines greater than 3.28 ft in height.

Hydrophytic Vegetation Present? **Yes** _____ **No** ✓

Remarks: (If observed, list morphological adaptations below).

SOIL

Sampling Point: DP2

Profile Description: (Describe to the depth needed to document the indicator or confirm the absence of indicators.)

Depth (inches)	Matrix Color (moist)	Matrix %	Redox Features Color (moist)	Redox Features %	Type[1]	Loc[2]	Texture	Remarks
0-10	2.5YR 5/4	100					L	with gravel
	Refusal							

[1]Type: C=Concentration, D=Depletion, RM=Reduced Matrix, MS=Masked Sand Grains. [2]Location: PL=Pore Lining, M=Matrix.

Hydric Soil Indicators:

___ Histosol (A1)
___ Histic Epipedon (A2)
___ Black Histic (A3)
___ Hydrogen Sulfide (A4)
___ Stratified Layers (A5)
___ 2 cm Muck (A10) **(LRR N)**
___ Depleted Below Dark Surface (A11)
___ Thick Dark Surface (A12)
___ Sandy Mucky Mineral (S1) **(LRR N, MLRA 147, 148)**
___ Sandy Gleyed Matrix (S4)
___ Sandy Redox (S5)
___ Stripped Matrix (S6)
___ Dark Surface (S7)
___ Polyvalue Below Surface (S8) **(MLRA 147, 148)**
___ Thin Dark Surface (S9) **(MLRA 147, 148)**
___ Loamy Gleyed Matrix (F2)
___ Depleted Matrix (F3)
___ Redox Dark Surface (F6)
___ Depleted Dark Surface (F7)
___ Redox Depressions (F8)
___ Iron-Manganese Masses (F12) **(LRR N, MLRA 136)**
___ Umbric Surface (F13) **(MLRA 136, 122)**
___ Piedmont Floodplain Soils (F19) **(MLRA 148)**
___ Red Parent Material (F21) **(MLRA 127, 147)**

Indicators for Problematic Hydric Soils[3]:

___ 2 cm Muck (A10) **(MLRA 147)**
___ Coast Prairie Redox (A16) **(MLRA 147, 148)**
___ Piedmont Floodplain Soils (F19) **(MLRA 136, 147)**
___ Very Shallow Dark Surface (TF12)
___ Other (Explain in Remarks)

[3]Indicators of hydrophytic vegetation and wetland hydrology must be present, unless disturbed or problematic.

Restrictive Layer (if observed):

Type:

Depth (inches):

Hydric Soil Present? **Yes** ☐ **No** ☑

Remarks:

Pe_SB2 in GPS

Feature Sketch: Indicate North, CL and Survey Corridor, Photo Locations

Sampling Point: DP2

Feature Photo: Facing - __N __S __E __W __NE __NW __SE __SW

WETLAND DETERMINATION DATA FORM – Eastern Mountains and Piedmont

Project/Site: Perkiomen Creek Gate Blowdown City/County: Montgomery Sampling Date: 3/1/18

Applicant/Owner: Adelphia State: PA Sampling Point: DP3

Investigator(s): NV5- Scott Angus, Ethan Muller Section, Township, Range: _____

Landform (hillslope, terrace, etc.): Terrace Local relief (concave, convex, none): None Slope (%): 0

Subregion (LRR or MLRA): LRRS Lat: 40.216435º Long: -75.453259º Datum: _____

Soil Map Unit Name: Bo Bowmansville NWI classification: NA

Are climatic / hydrologic conditions on the site typical for this time of year? Yes ✓ No ☐ (If no, explain in Remarks.)

Are Vegetation ✓, Soil _____, or Hydrology _____ significantly disturbed? Are "Normal Circumstances" present? Yes ☐ No ✓

Are Vegetation _____, Soil _____, or Hydrology _____ naturally problematic? (If needed, explain any answers in Remarks.)

SUMMARY OF FINDINGS – Attach site map showing sampling point locations, transects, important features, etc.

Hydrophytic Vegetation Present?	Yes ✓	No ☐	**Is the Sampled Area within a Wetland?** **Yes** ✓ **No** ☐
Hydric Soil Present?	Yes ✓	No ☐	
Wetland Hydrology Present?	Yes ✓	No ☐	

Remarks:

Mowed vegetation within ROW.
PC-W-01

HYDROLOGY

Wetland Hydrology Indicators:

Primary Indicators (minimum of one is required; check all that apply)

- ✓ Surface Water (A1)
- ___ High Water Table (A2)
- ✓ Saturation (A3)
- ___ Water Marks (B1)
- ___ Sediment Deposits (B2)
- ___ Drift Deposits (B3)
- ___ Algal Mat or Crust (B4)
- ___ Iron Deposits (B5)
- ___ Inundation Visible on Aerial Imagery (B7)
- ___ Water-Stained Leaves (B9)
- ___ Aquatic Fauna (B13)
- ✓ True Aquatic Plants (B14)
- ___ Hydrogen Sulfide Odor (C1)
- ___ Oxidized Rhizospheres on Living Roots (C3)
- ___ Presence of Reduced Iron (C4)
- ___ Recent Iron Reduction in Tilled Soils (C6)
- ___ Thin Muck Surface (C7)
- ___ Other (Explain in Remarks)

Secondary Indicators (minimum of two required)

- ___ Surface Soil Cracks (B6)
- ___ Sparsely Vegetated Concave Surface (B8)
- ___ Drainage Patterns (B10)
- ___ Moss Trim Lines (B16)
- ___ Dry-Season Water Table (C2)
- ___ Crayfish Burrows (C8)
- ___ Saturation Visible on Aerial Imagery (C9)
- ___ Stunted or Stressed Plants (D1)
- ___ Geomorphic Position (D2)
- ___ Shallow Aquitard (D3)
- ___ Microtopographic Relief (D4)
- ___ FAC-Neutral Test (D5)

Field Observations:

Surface Water Present?	Yes ✓	No ☐	Depth (inches): 8"
Water Table Present?	Yes ☐	No ✓	Depth (inches): _____
Saturation Present? (includes capillary fringe)	Yes ✓	No ☐	Depth (inches): Surface

Wetland Hydrology Present? **Yes** ✓ **No** ☐

Describe Recorded Data (stream gauge, monitoring well, aerial photos, previous inspections), if available:

Remarks:

Swale along edge of wetland flowing from pipe.

VEGETATION (Four Strata) – Use scientific names of plants.

Sampling Point: DP3

Tree Stratum (Plot size: _____)	Absolute % Cover	Dominant Species?	Indicator Status
1.			
2.			
3.			
4.			
5.			
6.			
7.			
8.			
	0 = Total Cover		
50% of total cover: 0	20% of total cover: 0		

Sapling/Shrub Stratum (Plot size: _____)			
1.			
2.			
3.			
4.			
5.			
6.			
7.			
8.			
	0 = Total Cover		
50% of total cover: 0	20% of total cover: 0		

Herb Stratum (Plot size: _____)			
1. *Mowed lawn grasses*	55	Yes	
2. *Juncus effusus*	15	Yes	FACW
3. *Althea officinalis*	15	Yes	FACW
4. *algae sp.*	15	Yes	
5.			
6.			
7.			
8.			
9.			
10.			
11.			
12.			
	100 = Total Cover		
50% of total cover: 50	20% of total cover: 20		

Woody Vine Stratum (Plot size: _____)			
1.			
2.			
3.			
4.			
5.			
	0 = Total Cover		
50% of total cover: 0	20% of total cover: 0		

Dominance Test worksheet:

Number of Dominant Species That Are OBL, FACW, or FAC: 2 (A)

Total Number of Dominant Species Across All Strata: 4 (B)

Percent of Dominant Species That Are OBL, FACW, or FAC: 50.00 (A/B)

Prevalence Index worksheet:

Total % Cover of:		Multiply by:	
OBL species	0	x 1 =	0
FACW species	30	x 2 =	60
FAC species	0	x 3 =	0
FACU species	0	x 4 =	0
UPL species	0	x 5 =	0
Column Totals:	30 (A)		60 (B)

Prevalence Index = B/A = 2.00

Hydrophytic Vegetation Indicators:

✓ 1 - Rapid Test for Hydrophytic Vegetation

✓ 2 - Dominance Test is >50%

✓ 3 - Prevalence Index is ≤3.0[1]

___ Problematic Hydrophytic Vegetation[1] (Explain)

[1]Indicators of hydric soil and wetland hydrology must be present, unless disturbed or problematic.

Definitions of Four Vegetation Strata:

Tree – Woody plants, excluding vines, 3 in. (7.6 cm) or more in diameter at breast height (DBH), regardless of height.

Sapling/Shrub – Woody plants, excluding vines, less than 3 in. DBH and greater than 3.28 ft (1 m) tall.

Herb – All herbaceous (non-woody) plants, regardless of size, and woody plants less than 3.28 ft tall.

Woody vine – All woody vines greater than 3.28 ft in height.

Hydrophytic Vegetation Present? Yes ✓ No _____

Remarks: (If observed, list morphological adaptations below).

SOIL

Sampling Point: DP3

Profile Description: (Describe to the depth needed to document the indicator or confirm the absence of indicators.)

Depth (inches)	Matrix Color (moist)	Matrix %	Redox Features Color (moist)	Redox Features %	Type[1]	Loc[2]	Texture	Remarks
0-20	2.5YR 4/2	90	2.5YR 5/4	10			SCL	

[1]Type: C=Concentration, D=Depletion, RM=Reduced Matrix, MS=Masked Sand Grains. [2]Location: PL=Pore Lining, M=Matrix.

Hydric Soil Indicators:

- ___ Histosol (A1)
- ___ Histic Epipedon (A2)
- ___ Black Histic (A3)
- ___ Hydrogen Sulfide (A4)
- ___ Stratified Layers (A5)
- ___ 2 cm Muck (A10) **(LRR N)**
- ___ Depleted Below Dark Surface (A11)
- ___ Thick Dark Surface (A12)
- ___ Sandy Mucky Mineral (S1) **(LRR N, MLRA 147, 148)**
- ___ Sandy Gleyed Matrix (S4)
- ___ Sandy Redox (S5)
- ___ Stripped Matrix (S6)
- ___ Dark Surface (S7)
- ___ Polyvalue Below Surface (S8) **(MLRA 147, 148)**
- ___ Thin Dark Surface (S9) **(MLRA 147, 148)**
- ___ Loamy Gleyed Matrix (F2)
- ___ Depleted Matrix (F3)
- ___ Redox Dark Surface (F6)
- ___ Depleted Dark Surface (F7)
- ___ Redox Depressions (F8)
- ___ Iron-Manganese Masses (F12) **(LRR N, MLRA 136)**
- ___ Umbric Surface (F13) **(MLRA 136, 122)**
- ___ Piedmont Floodplain Soils (F19) **(MLRA 148)**
- ✓ Red Parent Material (F21) **(MLRA 127, 147)**

Indicators for Problematic Hydric Soils[3]:

- ___ 2 cm Muck (A10) **(MLRA 147)**
- ___ Coast Prairie Redox (A16) **(MLRA 147, 148)**
- ___ Piedmont Floodplain Soils (F19) **(MLRA 136, 147)**
- ___ Very Shallow Dark Surface (TF12)
- ___ Other (Explain in Remarks)

[3]Indicators of hydrophytic vegetation and wetland hydrology must be present, unless disturbed or problematic.

Restrictive Layer (if observed):

Type:

Depth (inches):

Hydric Soil Present? Yes ✓ No ☐

Remarks:

Pe_SB3 in GPS

Feature Sketch: Indicate North, CL and Survey Corridor, Photo Locations

Sampling Point: DP3

Feature Photo: Facing - __N __S __E __W __NE __NW __SE __SW

WETLAND DETERMINATION DATA FORM – Eastern Mountains and Piedmont

Project/Site: Perkiomen Creek Gate Blowdown City/County: Montgomery Sampling Date: 3/1/18

Applicant/Owner: Adelphia State: PA Sampling Point: DP4

Investigator(s): NV5- Scott Angus, Ethan Muller Section, Township, Range: Perkiomen

Landform (hillslope, terrace, etc.): Terrace Local relief (concave, convex, none): None Slope (%): 0

Subregion (LRR or MLRA): LRRS Lat: 40.216439º Long: -75.453222º Datum: _____

Soil Map Unit Name: Bo Bowmansville NWI classification: NA

Are climatic / hydrologic conditions on the site typical for this time of year? Yes ✓ No ☐ (If no, explain in Remarks.)

Are Vegetation ✓, Soil _____, or Hydrology _____ significantly disturbed? Are "Normal Circumstances" present? Yes ☐ No ✓

Are Vegetation _____, Soil _____, or Hydrology _____ naturally problematic? (If needed, explain any answers in Remarks.)

SUMMARY OF FINDINGS – Attach site map showing sampling point locations, transects, important features, etc.

Hydrophytic Vegetation Present?	Yes ☐	No ✓	**Is the Sampled Area within a Wetland?** **Yes** ☐ **No** ✓
Hydric Soil Present?	Yes ☐	No ✓	
Wetland Hydrology Present?	Yes ☐	No ✓	

Remarks:

Mowed vegetation within ROW. IEC escort told us theres an independent waterline that crosses the ROW here somewhere that hasn't been located.

HYDROLOGY

Wetland Hydrology Indicators:

Primary Indicators (minimum of one is required; check all that apply)

___ Surface Water (A1)
___ High Water Table (A2)
___ Saturation (A3)
___ Water Marks (B1)
___ Sediment Deposits (B2)
___ Drift Deposits (B3)
___ Algal Mat or Crust (B4)
___ Iron Deposits (B5)
___ Inundation Visible on Aerial Imagery (B7)
___ Water-Stained Leaves (B9)
___ Aquatic Fauna (B13)
___ True Aquatic Plants (B14)
___ Hydrogen Sulfide Odor (C1)
___ Oxidized Rhizospheres on Living Roots (C3)
___ Presence of Reduced Iron (C4)
___ Recent Iron Reduction in Tilled Soils (C6)
___ Thin Muck Surface (C7)
___ Other (Explain in Remarks)

Secondary Indicators (minimum of two required)

___ Surface Soil Cracks (B6)
___ Sparsely Vegetated Concave Surface (B8)
___ Drainage Patterns (B10)
___ Moss Trim Lines (B16)
___ Dry-Season Water Table (C2)
___ Crayfish Burrows (C8)
___ Saturation Visible on Aerial Imagery (C9)
___ Stunted or Stressed Plants (D1)
___ Geomorphic Position (D2)
___ Shallow Aquitard (D3)
___ Microtopographic Relief (D4)
___ FAC-Neutral Test (D5)

Field Observations:

Surface Water Present?	Yes ☐	No ✓	Depth (inches): _____
Water Table Present?	Yes ☐	No ✓	Depth (inches): _____
Saturation Present? (includes capillary fringe)	Yes ☐	No ✓	Depth (inches): _____

Wetland Hydrology Present? **Yes** ☐ **No** ✓

Describe Recorded Data (stream gauge, monitoring well, aerial photos, previous inspections), if available:

Remarks:

No wetland hydrology indicators are present.

VEGETATION (Four Strata) – Use scientific names of plants.

Sampling Point: DP4

Tree Stratum (Plot size: _____)	Absolute % Cover	Dominant Species?	Indicator Status
1.			
2.			
3.			
4.			
5.			
6.			
7.			
8.			
	0 = Total Cover		
50% of total cover: 0	20% of total cover: 0		

Sapling/Shrub Stratum (Plot size: _____)			
1.			
2.			
3.			
4.			
5.			
6.			
7.			
8.			
	0 = Total Cover		
50% of total cover: 0	20% of total cover: 0		

Herb Stratum (Plot size: _____)			
1. *Poa pratensis*	10	No	FACU
2. *Crab grass*	10	No	UPL
3. *Anagallis arvensis*	5	No	UPL
4. *mowed lawn grasses*	65	Yes	
5. *Allium oleraceum*	5	No	FACU
6. *Plantago lanceolata*	5	No	UPL
7.			
8.			
9.			
10.			
11.			
12.			
	100 = Total Cover		
50% of total cover: 50	20% of total cover: 20		

Woody Vine Stratum (Plot size: _____)			
1.			
2.			
3.			
4.			
5.			
	0 = Total Cover		
50% of total cover: 0	20% of total cover: 0		

Dominance Test worksheet:

Number of Dominant Species That Are OBL, FACW, or FAC: 0 (A)

Total Number of Dominant Species Across All Strata: 1 (B)

Percent of Dominant Species That Are OBL, FACW, or FAC: 0.00 (A/B)

Prevalence Index worksheet:

Total % Cover of:		Multiply by:	
OBL species	0	x 1 =	0
FACW species	0	x 2 =	0
FAC species	0	x 3 =	0
FACU species	15	x 4 =	60
UPL species	20	x 5 =	100
Column Totals:	35 (A)		160 (B)

Prevalence Index = B/A = 4.57

Hydrophytic Vegetation Indicators:

___ 1 - Rapid Test for Hydrophytic Vegetation

___ 2 - Dominance Test is >50%

___ 3 - Prevalence Index is ≤3.0[1]

___ Problematic Hydrophytic Vegetation[1] (Explain)

[1]Indicators of hydric soil and wetland hydrology must be present, unless disturbed or problematic.

Definitions of Four Vegetation Strata:

Tree – Woody plants, excluding vines, 3 in. (7.6 cm) or more in diameter at breast height (DBH), regardless of height.

Sapling/Shrub – Woody plants, excluding vines, less than 3 in. DBH and greater than 3.28 ft (1 m) tall.

Herb – All herbaceous (non-woody) plants, regardless of size, and woody plants less than 3.28 ft tall.

Woody vine – All woody vines greater than 3.28 ft in height.

Hydrophytic Vegetation Present? Yes _____ No ✓

Remarks: (If observed, list morphological adaptations below).

SOIL

Sampling Point: DP4

Profile Description: (Describe to the depth needed to document the indicator or confirm the absence of indicators.)

Depth (inches)	Matrix Color (moist)	Matrix %	Redox Features Color (moist)	Redox %	Type[1]	Loc[2]	Texture	Remarks
0-2	7.5YR 3/4	100					L	
2-10	5YR 4/6	100					L	
	Refusal / gravel							

[1]Type: C=Concentration, D=Depletion, RM=Reduced Matrix, MS=Masked Sand Grains. [2]Location: PL=Pore Lining, M=Matrix.

Hydric Soil Indicators:

___ Histosol (A1)
___ Histic Epipedon (A2)
___ Black Histic (A3)
___ Hydrogen Sulfide (A4)
___ Stratified Layers (A5)
___ 2 cm Muck (A10) **(LRR N)**
___ Depleted Below Dark Surface (A11)
___ Thick Dark Surface (A12)
___ Sandy Mucky Mineral (S1) **(LRR N, MLRA 147, 148)**
___ Sandy Gleyed Matrix (S4)
___ Sandy Redox (S5)
___ Stripped Matrix (S6)
___ Dark Surface (S7)
___ Polyvalue Below Surface (S8) **(MLRA 147, 148)**
___ Thin Dark Surface (S9) **(MLRA 147, 148)**
___ Loamy Gleyed Matrix (F2)
___ Depleted Matrix (F3)
___ Redox Dark Surface (F6)
___ Depleted Dark Surface (F7)
___ Redox Depressions (F8)
___ Iron-Manganese Masses (F12) **(LRR N, MLRA 136)**
___ Umbric Surface (F13) **(MLRA 136, 122)**
___ Piedmont Floodplain Soils (F19) **(MLRA 148)**
___ Red Parent Material (F21) **(MLRA 127, 147)**

Indicators for Problematic Hydric Soils[3]:

___ 2 cm Muck (A10) **(MLRA 147)**
___ Coast Prairie Redox (A16) **(MLRA 147, 148)**
___ Piedmont Floodplain Soils (F19) **(MLRA 136, 147)**
___ Very Shallow Dark Surface (TF12)
___ Other (Explain in Remarks)

[3]Indicators of hydrophytic vegetation and wetland hydrology must be present, unless disturbed or problematic.

Restrictive Layer (if observed):

Type:

Depth (inches):

Hydric Soil Present? **Yes** ☐ **No** ☑

Remarks:

Pe_SB4 in GPS

Feature Sketch: Indicate North, CL and Survey Corridor, Photo Locations

Sampling Point: DP4

Feature Photo: Facing - __N __S __E __W __NE __NW __SE __SW

WETLAND DETERMINATION DATA FORM – Eastern Mountains and Piedmont

Project/Site: Pickering Creek City/County: Chester Sampling Date: 2/28/18

Applicant/Owner: Adelphia State: PA Sampling Point: DP1

Investigator(s): NV5- Scott Angus, Ethan Muller Section, Township, Range: Charlestown

Landform (hillslope, terrace, etc.): Terrace Local relief (concave, convex, none): None Slope (%): 15

Subregion (LRR or MLRA): LRRS Lat: 40.098993º Long: -75.570876º Datum: ____

Soil Map Unit Name: GdC Gladstone NWI classification: NA

Are climatic / hydrologic conditions on the site typical for this time of year? Yes ✓ No ___ (If no, explain in Remarks.)

Are Vegetation ✓, Soil ___, or Hydrology ___ significantly disturbed? Are "Normal Circumstances" present? Yes ___ No ✓

Are Vegetation ___, Soil ___, or Hydrology ___ naturally problematic? (If needed, explain any answers in Remarks.)

SUMMARY OF FINDINGS – Attach site map showing sampling point locations, transects, important features, etc.

Hydrophytic Vegetation Present?	Yes ___	No ✓	**Is the Sampled Area within a Wetland?** Yes ___ No ✓
Hydric Soil Present?	Yes ___	No ✓	
Wetland Hydrology Present?	Yes ___	No ✓	

Remarks:

Mowed vegetation. ROW lies within maintained grass field.

HYDROLOGY

Wetland Hydrology Indicators:

Primary Indicators (minimum of one is required; check all that apply)

- ___ Surface Water (A1)
- ___ High Water Table (A2)
- ___ Saturation (A3)
- ___ Water Marks (B1)
- ___ Sediment Deposits (B2)
- ___ Drift Deposits (B3)
- ___ Algal Mat or Crust (B4)
- ___ Iron Deposits (B5)
- ___ Inundation Visible on Aerial Imagery (B7)
- ___ Water-Stained Leaves (B9)
- ___ Aquatic Fauna (B13)
- ___ True Aquatic Plants (B14)
- ___ Hydrogen Sulfide Odor (C1)
- ___ Oxidized Rhizospheres on Living Roots (C3)
- ___ Presence of Reduced Iron (C4)
- ___ Recent Iron Reduction in Tilled Soils (C6)
- ___ Thin Muck Surface (C7)
- ___ Other (Explain in Remarks)

Secondary Indicators (minimum of two required)

- ___ Surface Soil Cracks (B6)
- ___ Sparsely Vegetated Concave Surface (B8)
- ___ Drainage Patterns (B10)
- ___ Moss Trim Lines (B16)
- ___ Dry-Season Water Table (C2)
- ___ Crayfish Burrows (C8)
- ___ Saturation Visible on Aerial Imagery (C9)
- ___ Stunted or Stressed Plants (D1)
- ___ Geomorphic Position (D2)
- ___ Shallow Aquitard (D3)
- ___ Microtopographic Relief (D4)
- ___ FAC-Neutral Test (D5)

Field Observations:

Surface Water Present?	Yes ___	No ✓	Depth (inches): ____
Water Table Present?	Yes ___	No ✓	Depth (inches): ____
Saturation Present? (includes capillary fringe)	Yes ___	No ✓	Depth (inches): ____

Wetland Hydrology Present? Yes ___ No ✓

Describe Recorded Data (stream gauge, monitoring well, aerial photos, previous inspections), if available:

Remarks:

No wetland hydrology indicators are present.

VEGETATION (Four Strata) – Use scientific names of plants.

Sampling Point: DP1

Tree Stratum (Plot size: _____)	Absolute % Cover	Dominant Species?	Indicator Status
1. *Pinus strobus*	15	Yes	FACU
2. *Picea abies*	10	No	NI
3.			
4.			
5.			
6.			
7.			
8.			
	25	= Total Cover	
50% of total cover: 12.5	20% of total cover: 5		

Sapling/Shrub Stratum (Plot size: _____)			
1.			
2.			
3.			
4.			
5.			
6.			
7.			
8.			
	0	= Total Cover	
50% of total cover: 0	20% of total cover: 0		

Herb Stratum (Plot size: _____)			
1. *Schedonorus sp.*	25	Yes	
2. *Poa pratensis*	40	Yes	FACU
3. *Phalaris arundinacea*	10	No	FACW
4.			
5.			
6.			
7.			
8.			
9.			
10.			
11.			
12.			
	75	= Total Cover	
50% of total cover: 37.5	20% of total cover: 15		

Woody Vine Stratum (Plot size: _____)			
1.			
2.			
3.			
4.			
5.			
	0	= Total Cover	
50% of total cover: 0	20% of total cover: 0		

Dominance Test worksheet:

Number of Dominant Species That Are OBL, FACW, or FAC: 0 (A)

Total Number of Dominant Species Across All Strata: 3 (B)

Percent of Dominant Species That Are OBL, FACW, or FAC: 0.00 (A/B)

Prevalence Index worksheet:

Total % Cover of:		Multiply by:	
OBL species	0	x 1 =	0
FACW species	10	x 2 =	20
FAC species	0	x 3 =	0
FACU species	55	x 4 =	220
UPL species	0	x 5 =	0
Column Totals:	65 (A)		240 (B)

Prevalence Index = B/A = 3.69

Hydrophytic Vegetation Indicators:

___ 1 - Rapid Test for Hydrophytic Vegetation

___ 2 - Dominance Test is >50%

___ 3 - Prevalence Index is ≤3.0[1]

___ Problematic Hydrophytic Vegetation[1] (Explain)

[1]Indicators of hydric soil and wetland hydrology must be present, unless disturbed or problematic.

Definitions of Four Vegetation Strata:

Tree – Woody plants, excluding vines, 3 in. (7.6 cm) or more in diameter at breast height (DBH), regardless of height.

Sapling/Shrub – Woody plants, excluding vines, less than 3 in. DBH and greater than 3.28 ft (1 m) tall.

Herb – All herbaceous (non-woody) plants, regardless of size, and woody plants less than 3.28 ft tall.

Woody vine – All woody vines greater than 3.28 ft in height.

Hydrophytic Vegetation Present? **Yes** _____ **No** ✓

Remarks: (If observed, list morphological adaptations below).

SOIL

Sampling Point: DP1

Profile Description: (Describe to the depth needed to document the indicator or confirm the absence of indicators.)

Depth (inches)	Matrix Color (moist)	Matrix %	Redox Features Color (moist)	Redox Features %	Type[1]	Loc[2]	Texture	Remarks
0-10	10YR 4/4	100					L	
	Refusal / Rock							

[1]Type: C=Concentration, D=Depletion, RM=Reduced Matrix, MS=Masked Sand Grains. [2]Location: PL=Pore Lining, M=Matrix.

Hydric Soil Indicators:

___ Histosol (A1)
___ Histic Epipedon (A2)
___ Black Histic (A3)
___ Hydrogen Sulfide (A4)
___ Stratified Layers (A5)
___ 2 cm Muck (A10) **(LRR N)**
___ Depleted Below Dark Surface (A11)
___ Thick Dark Surface (A12)
___ Sandy Mucky Mineral (S1) **(LRR N, MLRA 147, 148)**
___ Sandy Gleyed Matrix (S4)
___ Sandy Redox (S5)
___ Stripped Matrix (S6)
___ Dark Surface (S7)
___ Polyvalue Below Surface (S8) **(MLRA 147, 148)**
___ Thin Dark Surface (S9) **(MLRA 147, 148)**
___ Loamy Gleyed Matrix (F2)
___ Depleted Matrix (F3)
___ Redox Dark Surface (F6)
___ Depleted Dark Surface (F7)
___ Redox Depressions (F8)
___ Iron-Manganese Masses (F12) **(LRR N, MLRA 136)**
___ Umbric Surface (F13) **(MLRA 136, 122)**
___ Piedmont Floodplain Soils (F19) **(MLRA 148)**
___ Red Parent Material (F21) **(MLRA 127, 147)**

Indicators for Problematic Hydric Soils[3]:

___ 2 cm Muck (A10) **(MLRA 147)**
___ Coast Prairie Redox (A16) **(MLRA 147, 148)**
___ Piedmont Floodplain Soils (F19) **(MLRA 136, 147)**
___ Very Shallow Dark Surface (TF12)
___ Other (Explain in Remarks)

[3]Indicators of hydrophytic vegetation and wetland hydrology must be present, unless disturbed or problematic.

Restrictive Layer (if observed):

Type:

Depth (inches):

Hydric Soil Present? **Yes** ☐ **No** ☑

Remarks:

Pi_SB1 in GPS

Feature Sketch: Indicate North, CL and Survey Corridor, Photo Locations

Sampling Point: DP1

Feature Photo: Facing - __N __S __E __W __NE __NW __SE __SW

WETLAND DETERMINATION DATA FORM – Eastern Mountains and Piedmont

Project/Site: Quakertown CS TWS City/County: Bucks Sampling Date: 3/1/18

Applicant/Owner: Adelphia State: PA Sampling Point: DP1

Investigator(s): NV5- Scott Angus, Ethan Muller Section, Township, Range: Richland

Landform (hillslope, terrace, etc.): Hillslope Local relief (concave, convex, none): None Slope (%): 10

Subregion (LRR or MLRA): LRRS Lat: ____ Long: ____ Datum: ____

Soil Map Unit Name: UdB Udorthents NWI classification: NA

Are climatic / hydrologic conditions on the site typical for this time of year? Yes ✓ No ___ (If no, explain in Remarks.)

Are Vegetation ✓, Soil ✓, or Hydrology ___ significantly disturbed? Are "Normal Circumstances" present? Yes ___ No ✓

Are Vegetation ___, Soil ___, or Hydrology ___ naturally problematic? (If needed, explain any answers in Remarks.)

SUMMARY OF FINDINGS – Attach site map showing sampling point locations, transects, important features, etc.

Hydrophytic Vegetation Present?	Yes ✓	No ___	**Is the Sampled Area within a Wetland?** **Yes** ✓ **No** ___
Hydric Soil Present?	Yes ✓	No ___	
Wetland Hydrology Present?	Yes ✓	No ___	

Remarks:

Mowed vegetation and tires ruts present
QCS-W-01

HYDROLOGY

Wetland Hydrology Indicators:

Primary Indicators (minimum of one is required; check all that apply)

- ✓ Surface Water (A1)
- ___ High Water Table (A2)
- ✓ Saturation (A3)
- ___ Water Marks (B1)
- ___ Sediment Deposits (B2)
- ___ Drift Deposits (B3)
- ___ Algal Mat or Crust (B4)
- ___ Iron Deposits (B5)
- ___ Inundation Visible on Aerial Imagery (B7)
- ___ Water-Stained Leaves (B9)
- ___ Aquatic Fauna (B13)
- ___ True Aquatic Plants (B14)
- ___ Hydrogen Sulfide Odor (C1)
- ___ Oxidized Rhizospheres on Living Roots (C3)
- ___ Presence of Reduced Iron (C4)
- ___ Recent Iron Reduction in Tilled Soils (C6)
- ___ Thin Muck Surface (C7)
- ___ Other (Explain in Remarks)

Secondary Indicators (minimum of two required)

- ___ Surface Soil Cracks (B6)
- ___ Sparsely Vegetated Concave Surface (B8)
- ✓ Drainage Patterns (B10)
- ___ Moss Trim Lines (B16)
- ___ Dry-Season Water Table (C2)
- ___ Crayfish Burrows (C8)
- ___ Saturation Visible on Aerial Imagery (C9)
- ___ Stunted or Stressed Plants (D1)
- ___ Geomorphic Position (D2)
- ___ Shallow Aquitard (D3)
- ___ Microtopographic Relief (D4)
- ___ FAC-Neutral Test (D5)

Field Observations:

Surface Water Present?	Yes ✓	No ___	Depth (inches): 2"
Water Table Present?	Yes ___	No ✓	Depth (inches): ___
Saturation Present? (includes capillary fringe)	Yes ✓	No ___	Depth (inches): Surface

Wetland Hydrology Present? **Yes** ✓ **No** ___

Describe Recorded Data (stream gauge, monitoring well, aerial photos, previous inspections), if available:

Remarks:

Surface water is ponded in tire ruts.

VEGETATION (Four Strata) – Use scientific names of plants.

Sampling Point: DP1

Tree Stratum (Plot size: _____)	Absolute % Cover	Dominant Species?	Indicator Status
1.			
2.			
3.			
4.			
5.			
6.			
7.			
8.			
	0 = Total Cover		
50% of total cover: 0	20% of total cover: 0		

Sapling/Shrub Stratum (Plot size: _____)			
1.			
2.			
3.			
4.			
5.			
6.			
7.			
8.			
	0 = Total Cover		
50% of total cover: 0	20% of total cover: 0		

Herb Stratum (Plot size: _____)			
1. *Andropogon gerardii*	20	Yes	FAC
2. *Scirpus atrovirens*	25	Yes	OBL
3. *Microstegium vimineum*	20	Yes	FAC
4. *Arthraxon hispidus*	15	Yes	FAC
5. *Vernonia noveboracensis*	10	No	FACW
6. *Scirpus cyperinus*	10	No	FACW
7.			
8.			
9.			
10.			
11.			
12.			
	100 = Total Cover		
50% of total cover: 50	20% of total cover: 20		

Woody Vine Stratum (Plot size: _____)			
1.			
2.			
3.			
4.			
5.			
	0 = Total Cover		
50% of total cover: 0	20% of total cover: 0		

Dominance Test worksheet:

Number of Dominant Species That Are OBL, FACW, or FAC: 4 (A)

Total Number of Dominant Species Across All Strata: 4 (B)

Percent of Dominant Species That Are OBL, FACW, or FAC: 100.00 (A/B)

Prevalence Index worksheet:

Total % Cover of:		Multiply by:	
OBL species	25	x 1 =	25
FACW species	20	x 2 =	40
FAC species	55	x 3 =	165
FACU species	0	x 4 =	0
UPL species	0	x 5 =	0
Column Totals:	100 (A)		230 (B)

Prevalence Index = B/A = 2.30

Hydrophytic Vegetation Indicators:

___ 1 - Rapid Test for Hydrophytic Vegetation

___ 2 - Dominance Test is >50%

___ 3 - Prevalence Index is ≤3.0[1]

___ Problematic Hydrophytic Vegetation[1] (Explain)

[1]Indicators of hydric soil and wetland hydrology must be present, unless disturbed or problematic.

Definitions of Four Vegetation Strata:

Tree – Woody plants, excluding vines, 3 in. (7.6 cm) or more in diameter at breast height (DBH), regardless of height.

Sapling/Shrub – Woody plants, excluding vines, less than 3 in. DBH and greater than 3.28 ft (1 m) tall.

Herb – All herbaceous (non-woody) plants, regardless of size, and woody plants less than 3.28 ft tall.

Woody vine – All woody vines greater than 3.28 ft in height.

Hydrophytic Vegetation Present? Yes ✓ No _____

Remarks: (If observed, list morphological adaptations below).

SOIL

Sampling Point: DP1

Profile Description: (Describe to the depth needed to document the indicator or confirm the absence of indicators.)

Depth (inches)	Matrix Color (moist)	Matrix %	Redox Features Color (moist)	Redox %	Type[1]	Loc[2]	Texture	Remarks
0-2	5YR 4/1	90	5YR 5/8	5	C	PL	SCL	
			5YR 4/4	5	D	M	SCL	
2-18	10YR 4/1	90	10YR 5/6	5	C	PL	SCL	
			7.5YR 6/8	5	C	PL	SCL	

[1]Type: C=Concentration, D=Depletion, RM=Reduced Matrix, MS=Masked Sand Grains. [2]Location: PL=Pore Lining, M=Matrix.

Hydric Soil Indicators:

- ___ Histosol (A1)
- ___ Histic Epipedon (A2)
- ___ Black Histic (A3)
- ___ Hydrogen Sulfide (A4)
- ___ Stratified Layers (A5)
- ___ 2 cm Muck (A10) **(LRR N)**
- ___ Depleted Below Dark Surface (A11)
- ___ Thick Dark Surface (A12)
- ___ Sandy Mucky Mineral (S1) **(LRR N, MLRA 147, 148)**
- ___ Sandy Gleyed Matrix (S4)
- ___ Sandy Redox (S5)
- ___ Stripped Matrix (S6)
- ___ Dark Surface (S7)
- ___ Polyvalue Below Surface (S8) **(MLRA 147, 148)**
- ___ Thin Dark Surface (S9) **(MLRA 147, 148)**
- ___ Loamy Gleyed Matrix (F2)
- ✓ Depleted Matrix (F3)
- ___ Redox Dark Surface (F6)
- ✓ Depleted Dark Surface (F7)
- ___ Redox Depressions (F8)
- ___ Iron-Manganese Masses (F12) **(LRR N, MLRA 136)**
- ___ Umbric Surface (F13) **(MLRA 136, 122)**
- ___ Piedmont Floodplain Soils (F19) **(MLRA 148)**
- ___ Red Parent Material (F21) **(MLRA 127, 147)**

Indicators for Problematic Hydric Soils[3]:

- ___ 2 cm Muck (A10) **(MLRA 147)**
- ___ Coast Prairie Redox (A16) **(MLRA 147, 148)**
- ___ Piedmont Floodplain Soils (F19) **(MLRA 136, 147)**
- ___ Very Shallow Dark Surface (TF12)
- ___ Other (Explain in Remarks)

[3]Indicators of hydrophytic vegetation and wetland hydrology must be present, unless disturbed or problematic.

Restrictive Layer (if observed):

Type:

Depth (inches):

Hydric Soil Present? Yes ✓ No ☐

Remarks:

Tetco_SB1 in GPS

Concretions present

Feature Sketch: Indicate North, CL and Survey Corridor, Photo Locations

Sampling Point: DP1

Feature Photo: Facing - __N __S __E __W __NE __NW __SE __SW

WETLAND DETERMINATION DATA FORM – Eastern Mountains and Piedmont

Project/Site: Quakertown CS TWS City/County: Bucks Sampling Date: 3/1/18

Applicant/Owner: Adelphia State: PA Sampling Point: DP2

Investigator(s): NV5- Scott Angus, Ethan Muller Section, Township, Range: Richland

Landform (hillslope, terrace, etc.): Hillslope Local relief (concave, convex, none): None Slope (%): 10

Subregion (LRR or MLRA): LRRS Lat: ____ Long: ____ Datum: ____

Soil Map Unit Name: UdB Udorthents NWI classification: NA

Are climatic / hydrologic conditions on the site typical for this time of year? Yes ✓ No ___ (If no, explain in Remarks.)

Are Vegetation ✓, Soil ✓, or Hydrology ___ significantly disturbed? Are "Normal Circumstances" present? Yes ___ No ✓

Are Vegetation ___, Soil ___, or Hydrology ___ naturally problematic? (If needed, explain any answers in Remarks.)

SUMMARY OF FINDINGS – Attach site map showing sampling point locations, transects, important features, etc.

Hydrophytic Vegetation Present?	Yes ___	No ✓	**Is the Sampled Area within a Wetland?** Yes ___ No ✓
Hydric Soil Present?	Yes ___	No ✓	
Wetland Hydrology Present?	Yes ___	No ✓	

Remarks:

Mowed vegetation.

HYDROLOGY

Wetland Hydrology Indicators:

Primary Indicators (minimum of one is required; check all that apply)

- ___ Surface Water (A1)
- ___ High Water Table (A2)
- ___ Saturation (A3)
- ___ Water Marks (B1)
- ___ Sediment Deposits (B2)
- ___ Drift Deposits (B3)
- ___ Algal Mat or Crust (B4)
- ___ Iron Deposits (B5)
- ___ Inundation Visible on Aerial Imagery (B7)
- ___ Water-Stained Leaves (B9)
- ___ Aquatic Fauna (B13)
- ___ True Aquatic Plants (B14)
- ___ Hydrogen Sulfide Odor (C1)
- ___ Oxidized Rhizospheres on Living Roots (C3)
- ___ Presence of Reduced Iron (C4)
- ___ Recent Iron Reduction in Tilled Soils (C6)
- ___ Thin Muck Surface (C7)
- ___ Other (Explain in Remarks)

Secondary Indicators (minimum of two required)

- ___ Surface Soil Cracks (B6)
- ___ Sparsely Vegetated Concave Surface (B8)
- ___ Drainage Patterns (B10)
- ___ Moss Trim Lines (B16)
- ___ Dry-Season Water Table (C2)
- ___ Crayfish Burrows (C8)
- ___ Saturation Visible on Aerial Imagery (C9)
- ___ Stunted or Stressed Plants (D1)
- ___ Geomorphic Position (D2)
- ___ Shallow Aquitard (D3)
- ___ Microtopographic Relief (D4)
- ___ FAC-Neutral Test (D5)

Field Observations:

Surface Water Present?	Yes ___	No ✓	Depth (inches): ____
Water Table Present?	Yes ___	No ✓	Depth (inches): ____
Saturation Present? (includes capillary fringe)	Yes ___	No ✓	Depth (inches): ____

Wetland Hydrology Present? Yes ___ No ✓

Describe Recorded Data (stream gauge, monitoring well, aerial photos, previous inspections), if available:

Remarks:

No wetland hydrology indicators present.

VEGETATION (Four Strata) – Use scientific names of plants.

Sampling Point: DP2

Tree Stratum (Plot size: _____)	Absolute % Cover	Dominant Species?	Indicator Status
1.			
2.			
3.			
4.			
5.			
6.			
7.			
8.			
	0 = Total Cover		
50% of total cover: 0	20% of total cover: 0		

Sapling/Shrub Stratum (Plot size: _____)			
1. *Fraxinus americana*	5	No	FACU
2. *Ailanthus altissima*	10	No	FACU
3.			
4.			
5.			
6.			
7.			
8.			
	15 = Total Cover		
50% of total cover: 7.5	20% of total cover: 3		

Herb Stratum (Plot size: _____)			
1. *Brassica rapa*	15	Yes	UPL
2. *Artemesia vulgaris*	30	Yes	UPL
3. *Vicia sp.*	30	Yes	
4. *Solidago canadensis*	5	No	FACU
5. *Solidago altissima*	5	No	FACU
6.			
7.			
8.			
9.			
10.			
11.			
12.			
	85 = Total Cover		
50% of total cover: 42.5	20% of total cover: 17		

Woody Vine Stratum (Plot size: _____)			
1.			
2.			
3.			
4.			
5.			
	0 = Total Cover		
50% of total cover: 0	20% of total cover: 0		

Dominance Test worksheet:

Number of Dominant Species That Are OBL, FACW, or FAC: 0 (A)

Total Number of Dominant Species Across All Strata: 3 (B)

Percent of Dominant Species That Are OBL, FACW, or FAC: 0.00 (A/B)

Prevalence Index worksheet:

Total % Cover of:		Multiply by:	
OBL species	0	x 1 =	0
FACW species	0	x 2 =	0
FAC species	0	x 3 =	0
FACU species	25	x 4 =	100
UPL species	45	x 5 =	225
Column Totals:	70 (A)		325 (B)

Prevalence Index = B/A = 4.64

Hydrophytic Vegetation Indicators:

___ 1 - Rapid Test for Hydrophytic Vegetation

___ 2 - Dominance Test is >50%

___ 3 - Prevalence Index is ≤3.0[1]

___ Problematic Hydrophytic Vegetation[1] (Explain)

[1]Indicators of hydric soil and wetland hydrology must be present, unless disturbed or problematic.

Definitions of Four Vegetation Strata:

Tree – Woody plants, excluding vines, 3 in. (7.6 cm) or more in diameter at breast height (DBH), regardless of height.

Sapling/Shrub – Woody plants, excluding vines, less than 3 in. DBH and greater than 3.28 ft (1 m) tall.

Herb – All herbaceous (non-woody) plants, regardless of size, and woody plants less than 3.28 ft tall.

Woody vine – All woody vines greater than 3.28 ft in height.

Hydrophytic Vegetation Present? Yes _____ No ✓

Remarks: (If observed, list morphological adaptations below).

SOIL

Sampling Point: DP2

Profile Description: (Describe to the depth needed to document the indicator or confirm the absence of indicators.)

Depth (inches)	Matrix Color (moist)	Matrix %	Redox Features Color (moist)	Redox Features %	Type[1]	Loc[2]	Texture	Remarks
0-8	7.5YR 4/2	100					CL	
8-20	7.5YR 5/2	50	7.5YR 4/4	40			CL	with gravel
			7.5YR 6/2	5			CL	
			10YR 5/6	5			CL	

[1]Type: C=Concentration, D=Depletion, RM=Reduced Matrix, MS=Masked Sand Grains. [2]Location: PL=Pore Lining, M=Matrix.

Hydric Soil Indicators:

___ Histosol (A1)
___ Histic Epipedon (A2)
___ Black Histic (A3)
___ Hydrogen Sulfide (A4)
___ Stratified Layers (A5)
___ 2 cm Muck (A10) **(LRR N)**
___ Depleted Below Dark Surface (A11)
___ Thick Dark Surface (A12)
___ Sandy Mucky Mineral (S1) **(LRR N, MLRA 147, 148)**
___ Sandy Gleyed Matrix (S4)
___ Sandy Redox (S5)
___ Stripped Matrix (S6)
___ Dark Surface (S7)
___ Polyvalue Below Surface (S8) **(MLRA 147, 148)**
___ Thin Dark Surface (S9) **(MLRA 147, 148)**
___ Loamy Gleyed Matrix (F2)
___ Depleted Matrix (F3)
___ Redox Dark Surface (F6)
___ Depleted Dark Surface (F7)
___ Redox Depressions (F8)
___ Iron-Manganese Masses (F12) **(LRR N, MLRA 136)**
___ Umbric Surface (F13) **(MLRA 136, 122)**
___ Piedmont Floodplain Soils (F19) **(MLRA 148)**
___ Red Parent Material (F21) **(MLRA 127, 147)**

Indicators for Problematic Hydric Soils[3]:

___ 2 cm Muck (A10) **(MLRA 147)**
___ Coast Prairie Redox (A16) **(MLRA 147, 148)**
___ Piedmont Floodplain Soils (F19) **(MLRA 136, 147)**
___ Very Shallow Dark Surface (TF12)
___ Other (Explain in Remarks)

[3]Indicators of hydrophytic vegetation and wetland hydrology must be present, unless disturbed or problematic.

Restrictive Layer (if observed):

Type:

Depth (inches):

Hydric Soil Present? **Yes** ✓ **No** ☐

Remarks:

Tetco_SB2 in GPS

Feature Sketch: Indicate North, CL and Survey Corridor, Photo Locations

Sampling Point: DP2

Feature Photo: Facing - __N __S __E __W __NE __NW __SE __SW

WETLAND DETERMINATION DATA FORM – Eastern Mountains and Piedmont

Project/Site: Schuykill River Gate Blowdown City/County: Chester Sampling Date: 2/28/18

Applicant/Owner: Adelphia State: PA Sampling Point: DP1

Investigator(s): NV5- Scott Angus, Ethan Muller Section, Township, Range: Spring City

Landform (hillslope, terrace, etc.): Terrace Local relief (concave, convex, none): None Slope (%): 0

Subregion (LRR or MLRA): LRRS Lat: 40.160791º Long: -75.528001º Datum: _____

Soil Map Unit Name: GB Gibraltar NWI classification: NA

Are climatic / hydrologic conditions on the site typical for this time of year? Yes ✓ No ___ (If no, explain in Remarks.)

Are Vegetation ✓, Soil ___, or Hydrology ___ significantly disturbed? Are "Normal Circumstances" present? Yes ___ No ✓

Are Vegetation ___, Soil ___, or Hydrology ___ naturally problematic? (If needed, explain any answers in Remarks.)

SUMMARY OF FINDINGS – Attach site map showing sampling point locations, transects, important features, etc.

Hydrophytic Vegetation Present?	Yes ✓	No ___	**Is the Sampled Area within a Wetland?** **Yes** ✓ **No** ___
Hydric Soil Present?	Yes ✓	No ___	
Wetland Hydrology Present?	Yes ✓	No ___	

Remarks:

Mowed vegetation within ROW.
SR-W-01

HYDROLOGY

Wetland Hydrology Indicators:

Primary Indicators (minimum of one is required; check all that apply)

- ✓ Surface Water (A1)
- ___ High Water Table (A2)
- ___ Saturation (A3)
- ___ Water Marks (B1)
- ___ Sediment Deposits (B2)
- ___ Drift Deposits (B3)
- ___ Algal Mat or Crust (B4)
- ___ Iron Deposits (B5)
- ___ Inundation Visible on Aerial Imagery (B7)
- ✓ Water-Stained Leaves (B9)
- ___ Aquatic Fauna (B13)
- ___ True Aquatic Plants (B14)
- ___ Hydrogen Sulfide Odor (C1)
- ___ Oxidized Rhizospheres on Living Roots (C3)
- ___ Presence of Reduced Iron (C4)
- ___ Recent Iron Reduction in Tilled Soils (C6)
- ___ Thin Muck Surface (C7)
- ___ Other (Explain in Remarks)

Secondary Indicators (minimum of two required)

- ___ Surface Soil Cracks (B6)
- ___ Sparsely Vegetated Concave Surface (B8)
- ✓ Drainage Patterns (B10)
- ___ Moss Trim Lines (B16)
- ___ Dry-Season Water Table (C2)
- ___ Crayfish Burrows (C8)
- ___ Saturation Visible on Aerial Imagery (C9)
- ___ Stunted or Stressed Plants (D1)
- ___ Geomorphic Position (D2)
- ___ Shallow Aquitard (D3)
- ___ Microtopographic Relief (D4)
- ___ FAC-Neutral Test (D5)

Field Observations:

Surface Water Present?	Yes ___	No ✓	Depth (inches): _____
Water Table Present?	Yes ___	No ✓	Depth (inches): _____
Saturation Present? (includes capillary fringe)	Yes ✓	No ___	Depth (inches): 6"

Wetland Hydrology Present? **Yes** ✓ **No** ___

Describe Recorded Data (stream gauge, monitoring well, aerial photos, previous inspections), if available:

Remarks:

VEGETATION (Four Strata) – Use scientific names of plants.

Sampling Point: DP1

Tree Stratum (Plot size: _____)	Absolute % Cover	Dominant Species?	Indicator Status
1.			
2.			
3.			
4.			
5.			
6.			
7.			
8.			
	0 = Total Cover		
50% of total cover: 0	20% of total cover: 0		

Sapling/Shrub Stratum (Plot size: _____)			
1.			
2.			
3.			
4.			
5.			
6.			
7.			
8.			
	0 = Total Cover		
50% of total cover: 0	20% of total cover: 0		

Herb Stratum (Plot size: _____)			
1. *Ranunculus ficaria*	15	Yes	FAC
2. *Rumex crispus*	5	No	FAC
3. *Phalaris arundinacea*	60	Yes	FACW
4. *Rosa multiflora*	10	No	FACU
5. *Scirpus atrovirens*	5	No	OBL
6. *Dipsacus fullonum*	5	No	FACU
7. *Microstegium vimineum*	5	No	FAC
8.			
9.			
10.			
11.			
12.			
	105 = Total Cover		
50% of total cover: 52.5	20% of total cover: 21		

Woody Vine Stratum (Plot size: _____)			
1.			
2.			
3.			
4.			
5.			
	0 = Total Cover		
50% of total cover: 0	20% of total cover: 0		

Dominance Test worksheet:

Number of Dominant Species That Are OBL, FACW, or FAC: 2 (A)

Total Number of Dominant Species Across All Strata: 2 (B)

Percent of Dominant Species That Are OBL, FACW, or FAC: 100.00 (A/B)

Prevalence Index worksheet:

Total % Cover of:		Multiply by:	
OBL species	5	x 1 =	5
FACW species	60	x 2 =	120
FAC species	25	x 3 =	75
FACU species	15	x 4 =	60
UPL species	0	x 5 =	0
Column Totals:	105 (A)		260 (B)

Prevalence Index = B/A = 2.48

Hydrophytic Vegetation Indicators:

✓ 1 - Rapid Test for Hydrophytic Vegetation

✓ 2 - Dominance Test is >50%

✓ 3 - Prevalence Index is ≤3.0[1]

___ Problematic Hydrophytic Vegetation[1] (Explain)

[1]Indicators of hydric soil and wetland hydrology must be present, unless disturbed or problematic.

Definitions of Four Vegetation Strata:

Tree – Woody plants, excluding vines, 3 in. (7.6 cm) or more in diameter at breast height (DBH), regardless of height.

Sapling/Shrub – Woody plants, excluding vines, less than 3 in. DBH and greater than 3.28 ft (1 m) tall.

Herb – All herbaceous (non-woody) plants, regardless of size, and woody plants less than 3.28 ft tall.

Woody vine – All woody vines greater than 3.28 ft in height.

Hydrophytic Vegetation Present? Yes ✓ No ____

Remarks: (If observed, list morphological adaptations below).

SOIL

Sampling Point: DP1

Profile Description: (Describe to the depth needed to document the indicator or confirm the absence of indicators.)

Depth (inches)	Matrix Color (moist)	Matrix %	Redox Features Color (moist)	Redox Features %	Type[1]	Loc[2]	Texture	Remarks
0-6	7.5YR 2.5/1	100					SL	alluvial
6-12	7.5YR 3/1	90	7.5YR 5/8	5	C	PL	L	with gravel
			7.5YR 6/4	5	D	M	L	

[1]Type: C=Concentration, D=Depletion, RM=Reduced Matrix, MS=Masked Sand Grains. [2]Location: PL=Pore Lining, M=Matrix.

Hydric Soil Indicators:

- ___ Histosol (A1)
- ___ Histic Epipedon (A2)
- ___ Black Histic (A3)
- ___ Hydrogen Sulfide (A4)
- ___ Stratified Layers (A5)
- ___ 2 cm Muck (A10) **(LRR N)**
- ___ Depleted Below Dark Surface (A11)
- ___ Thick Dark Surface (A12)
- ___ Sandy Mucky Mineral (S1) **(LRR N, MLRA 147, 148)**
- ___ Sandy Gleyed Matrix (S4)
- ___ Sandy Redox (S5)
- ___ Stripped Matrix (S6)
- ✓ Dark Surface (S7)
- ___ Polyvalue Below Surface (S8) **(MLRA 147, 148)**
- ___ Thin Dark Surface (S9) **(MLRA 147, 148)**
- ___ Loamy Gleyed Matrix (F2)
- ___ Depleted Matrix (F3)
- ___ Redox Dark Surface (F6)
- ___ Depleted Dark Surface (F7)
- ___ Redox Depressions (F8)
- ___ Iron-Manganese Masses (F12) **(LRR N, MLRA 136)**
- ___ Umbric Surface (F13) **(MLRA 136, 122)**
- ___ Piedmont Floodplain Soils (F19) **(MLRA 148)**
- ___ Red Parent Material (F21) **(MLRA 127, 147)**

Indicators for Problematic Hydric Soils[3]:

- ___ 2 cm Muck (A10) **(MLRA 147)**
- ___ Coast Prairie Redox (A16) **(MLRA 147, 148)**
- ___ Piedmont Floodplain Soils (F19) **(MLRA 136, 147)**
- ___ Very Shallow Dark Surface (TF12)
- ___ Other (Explain in Remarks)

[3]Indicators of hydrophytic vegetation and wetland hydrology must be present, unless disturbed or problematic.

Restrictive Layer (if observed):

Type:

Depth (inches):

Hydric Soil Present? Yes ✓ No ☐

Remarks:

Feature Sketch: Indicate North, CL and Survey Corridor, Photo Locations

Sampling Point: DP1

Feature Photo: Facing - __N __S __E __W __NE __NW __SE __SW

WETLAND DETERMINATION DATA FORM – Eastern Mountains and Piedmont

Project/Site: Schuykill River Gate Blowdown City/County: Chester Sampling Date: 2/28/18

Applicant/Owner: Adelphia State: PA Sampling Point: DP2

Investigator(s): NV5- Scott Angus, Ethan Muller Section, Township, Range: Spring City

Landform (hillslope, terrace, etc.): Terrace Local relief (concave, convex, none): None Slope (%): 5

Subregion (LRR or MLRA): LRRS Lat: 40.160707º Long: -75.528375º Datum: ____

Soil Map Unit Name: GB Gibraltar NWI classification: NA

Are climatic / hydrologic conditions on the site typical for this time of year? Yes ✓ No ___ (If no, explain in Remarks.)

Are Vegetation ✓, Soil ___, or Hydrology ___ significantly disturbed? Are "Normal Circumstances" present? Yes ___ No ✓

Are Vegetation ___, Soil ___, or Hydrology ___ naturally problematic? (If needed, explain any answers in Remarks.)

SUMMARY OF FINDINGS – Attach site map showing sampling point locations, transects, important features, etc.

Hydrophytic Vegetation Present?	Yes ___	No ✓	**Is the Sampled Area within a Wetland?** Yes ___ No ✓
Hydric Soil Present?	Yes ___	No ✓	
Wetland Hydrology Present?	Yes ___	No ✓	

Remarks:

Mowed vegetation within ROW.
SR-W-01

HYDROLOGY

Wetland Hydrology Indicators:

Primary Indicators (minimum of one is required; check all that apply)

- ___ Surface Water (A1)
- ___ High Water Table (A2)
- ___ Saturation (A3)
- ___ Water Marks (B1)
- ___ Sediment Deposits (B2)
- ___ Drift Deposits (B3)
- ___ Algal Mat or Crust (B4)
- ___ Iron Deposits (B5)
- ___ Inundation Visible on Aerial Imagery (B7)
- ___ Water-Stained Leaves (B9)
- ___ Aquatic Fauna (B13)
- ___ True Aquatic Plants (B14)
- ___ Hydrogen Sulfide Odor (C1)
- ___ Oxidized Rhizospheres on Living Roots (C3)
- ___ Presence of Reduced Iron (C4)
- ___ Recent Iron Reduction in Tilled Soils (C6)
- ___ Thin Muck Surface (C7)
- ___ Other (Explain in Remarks)

Secondary Indicators (minimum of two required)

- ___ Surface Soil Cracks (B6)
- ___ Sparsely Vegetated Concave Surface (B8)
- ___ Drainage Patterns (B10)
- ___ Moss Trim Lines (B16)
- ___ Dry-Season Water Table (C2)
- ___ Crayfish Burrows (C8)
- ___ Saturation Visible on Aerial Imagery (C9)
- ___ Stunted or Stressed Plants (D1)
- ___ Geomorphic Position (D2)
- ___ Shallow Aquitard (D3)
- ___ Microtopographic Relief (D4)
- ___ FAC-Neutral Test (D5)

Field Observations:

Surface Water Present?	Yes ___	No ✓	Depth (inches): ____
Water Table Present?	Yes ___	No ✓	Depth (inches): ____
Saturation Present? (includes capillary fringe)	Yes ___	No ✓	Depth (inches): ____

Wetland Hydrology Present? Yes ___ No ✓

Describe Recorded Data (stream gauge, monitoring well, aerial photos, previous inspections), if available:

Remarks:

No wetland hydrology indicators are present.

VEGETATION (Four Strata) – Use scientific names of plants.

Sampling Point: DP2

Tree Stratum (Plot size: _____)	Absolute % Cover	Dominant Species?	Indicator Status
1.			
2.			
3.			
4.			
5.			
6.			
7.			
8.			
	0 = Total Cover		
50% of total cover: 0	20% of total cover: 0		

Sapling/Shrub Stratum (Plot size: _____)			
1.			
2.			
3.			
4.			
5.			
6.			
7.			
8.			
	0 = Total Cover		
50% of total cover: 0	20% of total cover: 0		

Herb Stratum (Plot size: _____)			
1. *Microstegium vimineum*	30	Yes	FAC
2. *Digitaria ischaemum*	40	Yes	UPL
3. *Cerastium fontanum*	10	No	FACU
4. *Trifolium repens*	10	No	FACU
5. *Phleum pratense*	10	No	FACU
6.			
7.			
8.			
9.			
10.			
11.			
12.			
	100 = Total Cover		
50% of total cover: 50	20% of total cover: 20		

Woody Vine Stratum (Plot size: _____)			
1.			
2.			
3.			
4.			
5.			
	0 = Total Cover		
50% of total cover: 0	20% of total cover: 0		

Dominance Test worksheet:

Number of Dominant Species That Are OBL, FACW, or FAC: 1 (A)

Total Number of Dominant Species Across All Strata: 2 (B)

Percent of Dominant Species That Are OBL, FACW, or FAC: 50.00 (A/B)

Prevalence Index worksheet:

Total % Cover of:		Multiply by:	
OBL species	0	x 1 =	0
FACW species	0	x 2 =	0
FAC species	30	x 3 =	90
FACU species	30	x 4 =	120
UPL species	40	x 5 =	200
Column Totals:	100 (A)		410 (B)

Prevalence Index = B/A = 4.10

Hydrophytic Vegetation Indicators:

___ 1 - Rapid Test for Hydrophytic Vegetation

___ 2 - Dominance Test is >50%

___ 3 - Prevalence Index is ≤3.0[1]

___ Problematic Hydrophytic Vegetation[1] (Explain)

[1]Indicators of hydric soil and wetland hydrology must be present, unless disturbed or problematic.

Definitions of Four Vegetation Strata:

Tree – Woody plants, excluding vines, 3 in. (7.6 cm) or more in diameter at breast height (DBH), regardless of height.

Sapling/Shrub – Woody plants, excluding vines, less than 3 in. DBH and greater than 3.28 ft (1 m) tall.

Herb – All herbaceous (non-woody) plants, regardless of size, and woody plants less than 3.28 ft tall.

Woody vine – All woody vines greater than 3.28 ft in height.

Hydrophytic Vegetation Present? Yes _____ No ✓

Remarks: (If observed, list morphological adaptations below).

Mowed and disturbed by construction

SOIL

Sampling Point: DP2

Profile Description: (Describe to the depth needed to document the indicator or confirm the absence of indicators.)

Depth (inches)	Matrix Color (moist)	Matrix %	Redox Features Color (moist)	Redox Features %	Type[1]	Loc[2]	Texture	Remarks
0-4	7.5YR 2.5/1	100					L	with gravel and brick
	Refusal							brick and gravel

[1]Type: C=Concentration, D=Depletion, RM=Reduced Matrix, MS=Masked Sand Grains. [2]Location: PL=Pore Lining, M=Matrix.

Hydric Soil Indicators:

- ___ Histosol (A1)
- ___ Histic Epipedon (A2)
- ___ Black Histic (A3)
- ___ Hydrogen Sulfide (A4)
- ___ Stratified Layers (A5)
- ___ 2 cm Muck (A10) **(LRR N)**
- ___ Depleted Below Dark Surface (A11)
- ___ Thick Dark Surface (A12)
- ___ Sandy Mucky Mineral (S1) **(LRR N, MLRA 147, 148)**
- ___ Sandy Gleyed Matrix (S4)
- ___ Sandy Redox (S5)
- ___ Stripped Matrix (S6)
- ___ Dark Surface (S7)
- ___ Polyvalue Below Surface (S8) **(MLRA 147, 148)**
- ___ Thin Dark Surface (S9) **(MLRA 147, 148)**
- ___ Loamy Gleyed Matrix (F2)
- ___ Depleted Matrix (F3)
- ___ Redox Dark Surface (F6)
- ___ Depleted Dark Surface (F7)
- ___ Redox Depressions (F8)
- ___ Iron-Manganese Masses (F12) **(LRR N, MLRA 136)**
- ___ Umbric Surface (F13) **(MLRA 136, 122)**
- ___ Piedmont Floodplain Soils (F19) **(MLRA 148)**
- ___ Red Parent Material (F21) **(MLRA 127, 147)**

Indicators for Problematic Hydric Soils[3]:

- ___ 2 cm Muck (A10) **(MLRA 147)**
- ___ Coast Prairie Redox (A16) **(MLRA 147, 148)**
- ___ Piedmont Floodplain Soils (F19) **(MLRA 136, 147)**
- ___ Very Shallow Dark Surface (TF12)
- ___ Other (Explain in Remarks)

[3]Indicators of hydrophytic vegetation and wetland hydrology must be present, unless disturbed or problematic.

Restrictive Layer (if observed):

Type:

Depth (inches):

Hydric Soil Present? **Yes** ☐ **No** ☑

Remarks:

Feature Sketch: Indicate North, CL and Survey Corridor, Photo Locations

Sampling Point: DP2

Feature Photo: Facing - __N __S __E __W __NE __NW __SE __SW

WETLAND DETERMINATION DATA FORM – Atlantic and Gulf Coastal Plain Region

Project/Site: Transco KISH City/County: Chester Sampling Date: 5/25/18

Applicant/Owner: Adephia State: PA Sampling Point: DP-1

Investigator(s): SA Section, Township, Range: Lower Chichester Twp

Landform (hillslope, terrace, etc.): Hillslope Local relief (concave, convex, none): Concave Slope (%): 10%

Subregion (LRR or MLRA): MLRA 149A Lat: 39.818562° Long: -75.435648° Datum: NAD 84

Soil Map Unit Name: _____ NWI classification: _____

Are climatic / hydrologic conditions on the site typical for this time of year? Yes X No _____ (If no, explain in Remarks.)

Are Vegetation _____, Soil _____, or Hydrology _____ significantly disturbed? Are "Normal Circumstances" present? Yes X No _____

Are Vegetation _____, Soil _____, or Hydrology _____ naturally problematic? (If needed, explain any answers in Remarks.)

SUMMARY OF FINDINGS – Attach site map showing sampling point locations, transects, important features, etc.

Hydrophytic Vegetation Present?	Yes X	No _____	**Is the Sampled Area within a Wetland?** **Yes X** **No _____**
Hydric Soil Present?	Yes X	No _____	
Wetland Hydrology Present?	Yes X	No _____	

Remarks:

TC-W-01

HYDROLOGY

Wetland Hydrology Indicators:

Primary Indicators (minimum of one is required; check all that apply)

- ☑ Surface Water (A1)
- ☑ High Water Table (A2)
- ☑ Saturation (A3)
- ☐ Water Marks (B1)
- ☐ Sediment Deposits (B2)
- ☐ Drift Deposits (B3)
- ☐ Algal Mat or Crust (B4)
- ☐ Iron Deposits (B5)
- ☐ Inundation Visible on Aerial Imagery (B7)
- ☑ Water-Stained Leaves (B9)
- ☐ Aquatic Fauna (B13)
- ☐ Marl Deposits (B15) **(LRR U)**
- ☐ Hydrogen Sulfide Odor (C1)
- ☑ Oxidized Rhizospheres along Living Roots (C3)
- ☐ Presence of Reduced Iron (C4)
- ☐ Recent Iron Reduction in Tilled Soils (C6)
- ☐ Thin Muck Surface (C7)
- ☐ Other (Explain in Remarks)

Secondary Indicators (minimum of two required)

- ☐ Surface Soil Cracks (B6)
- ☐ Sparsely Vegetated Concave Surface (B8)
- ☑ Drainage Patterns (B10)
- ☐ Moss Trim Lines (B16)
- ☐ Dry-Season Water Table (C2)
- ☐ Crayfish Burrows (C8)
- ☐ Saturation Visible on Aerial Imagery (C9)
- ☑ Geomorphic Position (D2)
- ☐ Shallow Aquitard (D3)
- ☐ FAC-Neutral Test (D5)
- ☐ Sphagnum moss (D8) **(LRR T, U)**

Field Observations:

Surface Water Present?	Yes X	No _____	Depth (inches): 3"
Water Table Present?	Yes X	No _____	Depth (inches): Surface
Saturation Present? (includes capillary fringe)	Yes X	No _____	Depth (inches): Surface

Wetland Hydrology Present? **Yes X** **No _____**

Describe Recorded Data (stream gauge, monitoring well, aerial photos, previous inspections), if available:

Remarks:

VEGETATION (Four Strata) – Use scientific names of plants.

Sampling Point: DP-1

Tree Stratum (Plot size: _____)	Absolute % Cover	Dominant Species?	Indicator Status
1. Acer rubrum	30	Y	FAC
2. Nyssa sylvatica	10	N	FAC
3. Liquidambar styraciflua	5	N	FAC
4. Fraxinus pennsylvanica	30	Y	FACW
5.			
6.			
7.			
8.			
	60 = Total Cover		

50% of total cover: _____ 20% of total cover: _____

Sapling/Shrub Stratum (Plot size: _____)			
1. Lindera benzoin	5	N	FACW
2.			
3.			
4.			
5.			
6.			
7.			
8.			
	= Total Cover		

50% of total cover: _____ 20% of total cover: _____

Herb Stratum (Plot size: _____)			
1. Glyceria striata	30	Y	OBL
2. Woodwardia areolata	20	Y	OBL
3. Phragmites australus	5	N	FACW
4.			
5.			
6.			
7.			
8.			
9.			
10.			
11.			
12.			
	60 = Total Cover		

50% of total cover: _____ 20% of total cover: _____

Woody Vine Stratum (Plot size: _____)			
1.			
2.			
3.			
4.			
5.			
	= Total Cover		

50% of total cover: _____ 20% of total cover: _____

Dominance Test worksheet:

Number of Dominant Species That Are OBL, FACW, or FAC: 4 (A)

Total Number of Dominant Species Across All Strata: 4 (B)

Percent of Dominant Species That Are OBL, FACW, or FAC: 100 (A/B)

Prevalence Index worksheet:

Total % Cover of:		Multiply by:	
OBL species	50	x 1 =	50
FACW species	40	x 2 =	80
FAC species	45	x 3 =	135
FACU species	0	x 4 =	0
UPL species	0	x 5 =	0
Column Totals:	135 (A)		290 (B)

Prevalence Index = B/A = 2.15

Hydrophytic Vegetation Indicators:

___ 1 - Rapid Test for Hydrophytic Vegetation

___ 2 - Dominance Test is >50%

___ 3 - Prevalence Index is ≤3.0[1]

___ Problematic Hydrophytic Vegetation[1] (Explain)

[1]Indicators of hydric soil and wetland hydrology must be present, unless disturbed or problematic.

Definitions of Four Vegetation Strata:

Tree – Woody plants, excluding vines, 3 in. (7.6 cm) or more in diameter at breast height (DBH), regardless of height.

Sapling/Shrub – Woody plants, excluding vines, less than 3 in. DBH and greater than 3.28 ft (1 m) tall.

Herb – All herbaceous (non-woody) plants, regardless of size, and woody plants less than 3.28 ft tall.

Woody vine – All woody vines greater than 3.28 ft in height.

Hydrophytic Vegetation Present? **Yes** X **No** _____

Remarks: (If observed, list morphological adaptations below).

SOIL

Sampling Point: DP-1

Profile Description: (Describe to the depth needed to document the indicator or confirm the absence of indicators.)

Depth (inches)	Matrix Color (moist)	Matrix %	Redox Features Color (moist)	Redox %	Type[1]	Loc[2]	Texture	Remarks
0-10	2.5YR 2.5/1	100					Si, L	mucky
10-24	10YR 4/1	95	10YR 5/8	5	C	PL	Si, L	mucky

[1]Type: C=Concentration, D=Depletion, RM=Reduced Matrix, MS=Masked Sand Grains. [2]Location: PL=Pore Lining, M=Matrix.

Hydric Soil Indicators: (Applicable to all LRRs, unless otherwise noted.)

- ☐ Histosol (A1)
- ☐ Histic Epipedon (A2)
- ☐ Black Histic (A3)
- ☐ Hydrogen Sulfide (A4)
- ☐ Stratified Layers (A5)
- ☐ Organic Bodies (A6) **(LRR P, T, U)**
- ☐ 5 cm Mucky Mineral (A7) **(LRR P, T, U)**
- ☐ Muck Presence (A8) **(LRR U)**
- ☐ 1 cm Muck (A9) **(LRR P, T)**
- ☐ Depleted Below Dark Surface (A11)
- ☑ Thick Dark Surface (A12)
- ☐ Coast Prairie Redox (A16) **(MLRA 150A)**
- ☐ Sandy Mucky Mineral (S1) **(LRR O, S)**
- ☐ Sandy Gleyed Matrix (S4)
- ☐ Sandy Redox (S5)
- ☐ Stripped Matrix (S6)
- ☑ Dark Surface (S7) **(LRR P, S, T, U)**
- ☐ Polyvalue Below Surface (S8) **(LRR S, T, U)**
- ☐ Thin Dark Surface (S9) **(LRR S, T, U)**
- ☑ Loamy Mucky Mineral (F1) **(LRR O)**
- ☐ Loamy Gleyed Matrix (F2)
- ☑ Depleted Matrix (F3)
- ☐ Redox Dark Surface (F6)
- ☐ Depleted Dark Surface (F7)
- ☐ Redox Depressions (F8)
- ☐ Marl (F10) **(LRR U)**
- ☐ Depleted Ochric (F11) **(MLRA 151)**
- ☐ Iron-Manganese Masses (F12) **(LRR O, P, T)**
- ☐ Umbric Surface (F13) **(LRR P, T, U)**
- ☐ Delta Ochric (F17) **(MLRA 151)**
- ☐ Reduced Vertic (F18) **(MLRA 150A, 150B)**
- ☐ Piedmont Floodplain Soils (F19) **(MLRA 149A)**
- ☐ Anomalous Bright Loamy Soils (F20) **(MLRA 149A, 153C, 153D)**

Indicators for Problematic Hydric Soils[3]:

- ☐ 1 cm Muck (A9) **(LRR O)**
- ☐ 2 cm Muck (A10) **(LRR S)**
- ☐ Reduced Vertic (F18) **(outside MLRA 150A,B)**
- ☐ Piedmont Floodplain Soils (F19) **(LRR P, S, T)**
- ☐ Anomalous Bright Loamy Soils (F20) **(MLRA 153B)**
- ☐ Red Parent Material (TF2)
- ☐ Very Shallow Dark Surface (TF12)
- ☐ Other (Explain in Remarks)

[3]Indicators of hydrophytic vegetation and wetland hydrology must be present, unless disturbed or problematic.

Restrictive Layer (if observed):

Type: _____

Depth (inches): _____

Hydric Soil Present? Yes X No _____

Remarks:

WETLAND DETERMINATION DATA FORM – Atlantic and Gulf Coastal Plain Region

Project/Site: Transco KISH City/County: Chester Sampling Date: 5/25/18

Applicant/Owner: Adephia State: PA Sampling Point: DP-2

Investigator(s): SA Section, Township, Range: Lower Chichester Twp

Landform (hillslope, terrace, etc.): Hillslope Local relief (concave, convex, none): None Slope (%): 10%

Subregion (LRR or MLRA): MLRA 149A Lat: 39.818562° Long: -75.435648° Datum: NAD 84

Soil Map Unit Name: _____ NWI classification: _____

Are climatic / hydrologic conditions on the site typical for this time of year? Yes X No _____ (If no, explain in Remarks.)

Are Vegetation _____, Soil _____, or Hydrology _____ significantly disturbed? Are "Normal Circumstances" present? Yes X No _____

Are Vegetation _____, Soil _____, or Hydrology _____ naturally problematic? (If needed, explain any answers in Remarks.)

SUMMARY OF FINDINGS – Attach site map showing sampling point locations, transects, important features, etc.

Hydrophytic Vegetation Present?	Yes _____	No X	**Is the Sampled Area within a Wetland?** **Yes** _____ **No** X
Hydric Soil Present?	Yes _____	No X	
Wetland Hydrology Present?	Yes _____	No X	

Remarks:

TC-W-01

HYDROLOGY

Wetland Hydrology Indicators:

Primary Indicators (minimum of one is required; check all that apply)

- ☐ Surface Water (A1)
- ☐ High Water Table (A2)
- ☐ Saturation (A3)
- ☐ Water Marks (B1)
- ☐ Sediment Deposits (B2)
- ☐ Drift Deposits (B3)
- ☐ Algal Mat or Crust (B4)
- ☐ Iron Deposits (B5)
- ☐ Inundation Visible on Aerial Imagery (B7)
- ☐ Water-Stained Leaves (B9)
- ☐ Aquatic Fauna (B13)
- ☐ Marl Deposits (B15) **(LRR U)**
- ☐ Hydrogen Sulfide Odor (C1)
- ☐ Oxidized Rhizospheres along Living Roots (C3)
- ☐ Presence of Reduced Iron (C4)
- ☐ Recent Iron Reduction in Tilled Soils (C6)
- ☐ Thin Muck Surface (C7)
- ☐ Other (Explain in Remarks)

Secondary Indicators (minimum of two required)

- ☐ Surface Soil Cracks (B6)
- ☐ Sparsely Vegetated Concave Surface (B8)
- ☐ Drainage Patterns (B10)
- ☐ Moss Trim Lines (B16)
- ☐ Dry-Season Water Table (C2)
- ☐ Crayfish Burrows (C8)
- ☐ Saturation Visible on Aerial Imagery (C9)
- ☐ Geomorphic Position (D2)
- ☐ Shallow Aquitard (D3)
- ☐ FAC-Neutral Test (D5)
- ☐ Sphagnum moss (D8) **(LRR T, U)**

Field Observations:

Surface Water Present?	Yes _____	No X	Depth (inches): _____
Water Table Present?	Yes _____	No X	Depth (inches): _____
Saturation Present? (includes capillary fringe)	Yes _____	No X	Depth (inches): _____

Wetland Hydrology Present? **Yes** _____ **No** X

Describe Recorded Data (stream gauge, monitoring well, aerial photos, previous inspections), if available:

Remarks:

VEGETATION (Four Strata) – Use scientific names of plants.

Sampling Point: DP-2

Tree Stratum (Plot size: _____)	Absolute % Cover	Dominant Species?	Indicator Status
1. Gleditsia triacanthos	10	N	FAC
2. Acer platanoides	40	Y	UPL
3. Morus alba	10	N	FACU
4. Ailanthus altissima	10	N	FACU
5.			
6.			
7.			
8.			
	70 = Total Cover		

50% of total cover: _____ 20% of total cover: _____

Sapling/Shrub Stratum (Plot size: _____)			
1. Rosa multiflora	30	Y	FACU
2. Ligustrum vulgare	40	Y	UPL
3.			
4.			
5.			
6.			
7.			
8.			
	70 = Total Cover		

50% of total cover: _____ 20% of total cover: _____

Herb Stratum (Plot size: _____)			
1.			
2.			
3.			
4.			
5.			
6.			
7.			
8.			
9.			
10.			
11.			
12.			
	_____ = Total Cover		

50% of total cover: _____ 20% of total cover: _____

Woody Vine Stratum (Plot size: _____)			
1. Lonicera japonica	40	Y	FACU
2.			
3.			
4.			
5.			
	40 = Total Cover		

50% of total cover: _____ 20% of total cover: _____

Dominance Test worksheet:

Number of Dominant Species That Are OBL, FACW, or FAC: 0 (A)

Total Number of Dominant Species Across All Strata: 4 (B)

Percent of Dominant Species That Are OBL, FACW, or FAC: 0 (A/B)

Prevalence Index worksheet:

Total % Cover of:		Multiply by:	
OBL species	0	x 1 =	0
FACW species	0	x 2 =	0
FAC species	10	x 3 =	30
FACU species	90	x 4 =	360
UPL species	80	x 5 =	400
Column Totals:	180 (A)		790 (B)

Prevalence Index = B/A = 4.4

Hydrophytic Vegetation Indicators:

___ 1 - Rapid Test for Hydrophytic Vegetation

___ 2 - Dominance Test is >50%

___ 3 - Prevalence Index is ≤3.0[1]

___ Problematic Hydrophytic Vegetation[1] (Explain)

[1]Indicators of hydric soil and wetland hydrology must be present, unless disturbed or problematic.

Definitions of Four Vegetation Strata:

Tree – Woody plants, excluding vines, 3 in. (7.6 cm) or more in diameter at breast height (DBH), regardless of height.

Sapling/Shrub – Woody plants, excluding vines, less than 3 in. DBH and greater than 3.28 ft (1 m) tall.

Herb – All herbaceous (non-woody) plants, regardless of size, and woody plants less than 3.28 ft tall.

Woody vine – All woody vines greater than 3.28 ft in height.

Hydrophytic Vegetation Present? **Yes** _____ **No** x

Remarks: (If observed, list morphological adaptations below).

SOIL

Sampling Point: DP-2

Profile Description: (Describe to the depth needed to document the indicator or confirm the absence of indicators.)

Depth (inches)	Matrix Color (moist)	Matrix %	Redox Features Color (moist)	Redox %	Type[1]	Loc[2]	Texture	Remarks
0-8	10YR 3/3	100					L	
8-20	7.5YR 5/6	100					L	

[1]Type: C=Concentration, D=Depletion, RM=Reduced Matrix, MS=Masked Sand Grains. [2]Location: PL=Pore Lining, M=Matrix.

Hydric Soil Indicators: (Applicable to all LRRs, unless otherwise noted.)

- ☐ Histosol (A1)
- ☐ Histic Epipedon (A2)
- ☐ Black Histic (A3)
- ☐ Hydrogen Sulfide (A4)
- ☐ Stratified Layers (A5)
- ☐ Organic Bodies (A6) **(LRR P, T, U)**
- ☐ 5 cm Mucky Mineral (A7) **(LRR P, T, U)**
- ☐ Muck Presence (A8) **(LRR U)**
- ☐ 1 cm Muck (A9) **(LRR P, T)**
- ☐ Depleted Below Dark Surface (A11)
- ☐ Thick Dark Surface (A12)
- ☐ Coast Prairie Redox (A16) **(MLRA 150A)**
- ☐ Sandy Mucky Mineral (S1) **(LRR O, S)**
- ☐ Sandy Gleyed Matrix (S4)
- ☐ Sandy Redox (S5)
- ☐ Stripped Matrix (S6)
- ☐ Dark Surface (S7) **(LRR P, S, T, U)**
- ☐ Polyvalue Below Surface (S8) **(LRR S, T, U)**
- ☐ Thin Dark Surface (S9) **(LRR S, T, U)**
- ☐ Loamy Mucky Mineral (F1) **(LRR O)**
- ☐ Loamy Gleyed Matrix (F2)
- ☐ Depleted Matrix (F3)
- ☐ Redox Dark Surface (F6)
- ☐ Depleted Dark Surface (F7)
- ☐ Redox Depressions (F8)
- ☐ Marl (F10) **(LRR U)**
- ☐ Depleted Ochric (F11) **(MLRA 151)**
- ☐ Iron-Manganese Masses (F12) **(LRR O, P, T)**
- ☐ Umbric Surface (F13) **(LRR P, T, U)**
- ☐ Delta Ochric (F17) **(MLRA 151)**
- ☐ Reduced Vertic (F18) **(MLRA 150A, 150B)**
- ☐ Piedmont Floodplain Soils (F19) **(MLRA 149A)**
- ☐ Anomalous Bright Loamy Soils (F20) **(MLRA 149A, 153C, 153D)**

Indicators for Problematic Hydric Soils[3]:

- ☐ 1 cm Muck (A9) **(LRR O)**
- ☐ 2 cm Muck (A10) **(LRR S)**
- ☐ Reduced Vertic (F18) **(outside MLRA 150A,B)**
- ☐ Piedmont Floodplain Soils (F19) **(LRR P, S, T)**
- ☐ Anomalous Bright Loamy Soils (F20) **(MLRA 153B)**
- ☐ Red Parent Material (TF2)
- ☐ Very Shallow Dark Surface (TF12)
- ☐ Other (Explain in Remarks)

[3]Indicators of hydrophytic vegetation and wetland hydrology must be present, unless disturbed or problematic.

Restrictive Layer (if observed):

Type: _____

Depth (inches): _____

Hydric Soil Present? **Yes** _____ **No** X

Remarks:

WETLAND DETERMINATION DATA FORM – Atlantic and Gulf Coastal Plain Region

Project/Site: Transco KISH City/County: Chester Sampling Date: 5/25/18

Applicant/Owner: Adephia State: PA Sampling Point: DP-3

Investigator(s): SA Section, Township, Range: Lower Chichester Twp

Landform (hillslope, terrace, etc.): Terrace Local relief (concave, convex, none): Concave Slope (%): 0%

Subregion (LRR or MLRA): MLRA 149A Lat: 39.818562° Long: -75.435648° Datum: NAD 84

Soil Map Unit Name: _____ NWI classification: _____

Are climatic / hydrologic conditions on the site typical for this time of year? Yes X No _____ (If no, explain in Remarks.)

Are Vegetation _____, Soil _____, or Hydrology _____ significantly disturbed? Are "Normal Circumstances" present? Yes X No _____

Are Vegetation _____, Soil _____, or Hydrology _____ naturally problematic? (If needed, explain any answers in Remarks.)

SUMMARY OF FINDINGS – Attach site map showing sampling point locations, transects, important features, etc.

Hydrophytic Vegetation Present?	Yes X	No _____	**Is the Sampled Area within a Wetland?** **Yes X** **No _____**
Hydric Soil Present?	Yes X	No _____	
Wetland Hydrology Present?	Yes X	No _____	

Remarks:

TC-W-01

HYDROLOGY

Wetland Hydrology Indicators:

Primary Indicators (minimum of one is required; check all that apply)

- ☑ Surface Water (A1)
- ☑ High Water Table (A2)
- ☑ Saturation (A3)
- ☐ Water Marks (B1)
- ☐ Sediment Deposits (B2)
- ☐ Drift Deposits (B3)
- ☐ Algal Mat or Crust (B4)
- ☐ Iron Deposits (B5)
- ☐ Inundation Visible on Aerial Imagery (B7)
- ☑ Water-Stained Leaves (B9)
- ☐ Aquatic Fauna (B13)
- ☐ Marl Deposits (B15) **(LRR U)**
- ☐ Hydrogen Sulfide Odor (C1)
- ☑ Oxidized Rhizospheres along Living Roots (C3)
- ☐ Presence of Reduced Iron (C4)
- ☐ Recent Iron Reduction in Tilled Soils (C6)
- ☐ Thin Muck Surface (C7)
- ☐ Other (Explain in Remarks)

Secondary Indicators (minimum of two required)

- ☐ Surface Soil Cracks (B6)
- ☐ Sparsely Vegetated Concave Surface (B8)
- ☑ Drainage Patterns (B10)
- ☐ Moss Trim Lines (B16)
- ☐ Dry-Season Water Table (C2)
- ☐ Crayfish Burrows (C8)
- ☐ Saturation Visible on Aerial Imagery (C9)
- ☑ Geomorphic Position (D2)
- ☐ Shallow Aquitard (D3)
- ☐ FAC-Neutral Test (D5)
- ☐ Sphagnum moss (D8) **(LRR T, U)**

Field Observations:

Surface Water Present?	Yes X	No _____	Depth (inches): 3"
Water Table Present?	Yes X	No _____	Depth (inches): Surface
Saturation Present? (includes capillary fringe)	Yes X	No _____	Depth (inches): Surface

Wetland Hydrology Present? **Yes X** **No _____**

Describe Recorded Data (stream gauge, monitoring well, aerial photos, previous inspections), if available:

Remarks:

VEGETATION (Four Strata) – Use scientific names of plants.

Sampling Point: DP-3

Tree Stratum (Plot size: _____)	Absolute % Cover	Dominant Species?	Indicator Status
1. Acer rubrum	20	Y	FAC
2. Nyssa sylvatica	10	N	FAC
3. Liquidambar styraciflua	10	N	FAC
4. Fraxinus pennsylvanica	20	Y	FACW
5.			
6.			
7.			
8.			
	60 = Total Cover		

50% of total cover: _____ 20% of total cover: _____

Sapling/Shrub Stratum (Plot size: _____)			
1. Alnus serrulata	10	N	FACW
2.			
3.			
4.			
5.			
6.			
7.			
8.			
	_____ = Total Cover		

50% of total cover: _____ 20% of total cover: _____

Herb Stratum (Plot size: _____)			
1. Glyceria striata	10	N	OBL
2. Onoclea sensibilis	10	N	FACW
3. Phragmites australus	40	Y	FACW
4.			
5.			
6.			
7.			
8.			
9.			
10.			
11.			
12.			
	60 = Total Cover		

50% of total cover: _____ 20% of total cover: _____

Woody Vine Stratum (Plot size: _____)			
1.			
2.			
3.			
4.			
5.			
	_____ = Total Cover		

50% of total cover: _____ 20% of total cover: _____

Dominance Test worksheet:

Number of Dominant Species That Are OBL, FACW, or FAC: 3 (A)

Total Number of Dominant Species Across All Strata: 3 (B)

Percent of Dominant Species That Are OBL, FACW, or FAC: 100 (A/B)

Prevalence Index worksheet:

Total % Cover of:		Multiply by:	
OBL species	10	x 1 =	10
FACW species	80	x 2 =	160
FAC species	40	x 3 =	120
FACU species	0	x 4 =	0
UPL species	0	x 5 =	0
Column Totals:	130 (A)		290 (B)

Prevalence Index = B/A = 2.23

Hydrophytic Vegetation Indicators:

___ 1 - Rapid Test for Hydrophytic Vegetation

___ 2 - Dominance Test is >50%

___ 3 - Prevalence Index is ≤3.0[1]

___ Problematic Hydrophytic Vegetation[1] (Explain)

[1]Indicators of hydric soil and wetland hydrology must be present, unless disturbed or problematic.

Definitions of Four Vegetation Strata:

Tree – Woody plants, excluding vines, 3 in. (7.6 cm) or more in diameter at breast height (DBH), regardless of height.

Sapling/Shrub – Woody plants, excluding vines, less than 3 in. DBH and greater than 3.28 ft (1 m) tall.

Herb – All herbaceous (non-woody) plants, regardless of size, and woody plants less than 3.28 ft tall.

Woody vine – All woody vines greater than 3.28 ft in height.

Hydrophytic Vegetation Present? **Yes** X **No** _____

Remarks: (If observed, list morphological adaptations below).

SOIL

Sampling Point: DP-3

Profile Description: (Describe to the depth needed to document the indicator or confirm the absence of indicators.)

Depth (inches)	Matrix Color (moist)	Matrix %	Redox Features Color (moist)	Redox %	Type[1]	Loc[2]	Texture	Remarks
0-4	7.5YR 3/2	100					L	
4-15	2.5YR 2.5/1	100					Si, L	mucky
15-20	10YR 4/1	95	10YR 5/8	5	C	PL	Si, L	

[1]Type: C=Concentration, D=Depletion, RM=Reduced Matrix, MS=Masked Sand Grains. [2]Location: PL=Pore Lining, M=Matrix.

Hydric Soil Indicators: (Applicable to all LRRs, unless otherwise noted.)

- ☐ Histosol (A1)
- ☐ Histic Epipedon (A2)
- ☐ Black Histic (A3)
- ☐ Hydrogen Sulfide (A4)
- ☐ Stratified Layers (A5)
- ☐ Organic Bodies (A6) **(LRR P, T, U)**
- ☑ 5 cm Mucky Mineral (A7) **(LRR P, T, U)**
- ☐ Muck Presence (A8) **(LRR U)**
- ☐ 1 cm Muck (A9) **(LRR P, T)**
- ☐ Depleted Below Dark Surface (A11)
- ☐ Thick Dark Surface (A12)
- ☐ Coast Prairie Redox (A16) **(MLRA 150A)**
- ☑ Sandy Mucky Mineral (S1) **(LRR O, S)**
- ☐ Sandy Gleyed Matrix (S4)
- ☐ Sandy Redox (S5)
- ☐ Stripped Matrix (S6)
- ☐ Dark Surface (S7) **(LRR P, S, T, U)**
- ☐ Polyvalue Below Surface (S8) **(LRR S, T, U)**
- ☐ Thin Dark Surface (S9) **(LRR S, T, U)**
- ☑ Loamy Mucky Mineral (F1) **(LRR O)**
- ☐ Loamy Gleyed Matrix (F2)
- ☑ Depleted Matrix (F3)
- ☐ Redox Dark Surface (F6)
- ☐ Depleted Dark Surface (F7)
- ☐ Redox Depressions (F8)
- ☐ Marl (F10) **(LRR U)**
- ☐ Depleted Ochric (F11) **(MLRA 151)**
- ☐ Iron-Manganese Masses (F12) **(LRR O, P, T)**
- ☐ Umbric Surface (F13) **(LRR P, T, U)**
- ☐ Delta Ochric (F17) **(MLRA 151)**
- ☐ Reduced Vertic (F18) **(MLRA 150A, 150B)**
- ☐ Piedmont Floodplain Soils (F19) **(MLRA 149A)**
- ☐ Anomalous Bright Loamy Soils (F20) **(MLRA 149A, 153C, 153D)**

Indicators for Problematic Hydric Soils[3]:

- ☐ 1 cm Muck (A9) **(LRR O)**
- ☐ 2 cm Muck (A10) **(LRR S)**
- ☐ Reduced Vertic (F18) **(outside MLRA 150A,B)**
- ☐ Piedmont Floodplain Soils (F19) **(LRR P, S, T)**
- ☐ Anomalous Bright Loamy Soils (F20) **(MLRA 153B)**
- ☐ Red Parent Material (TF2)
- ☐ Very Shallow Dark Surface (TF12)
- ☐ Other (Explain in Remarks)

[3]Indicators of hydrophytic vegetation and wetland hydrology must be present, unless disturbed or problematic.

Restrictive Layer (if observed):

Type: _____

Depth (inches): _____

Hydric Soil Present? Yes X No _____

Remarks:

WETLAND DETERMINATION DATA FORM – Atlantic and Gulf Coastal Plain Region

Project/Site: Transco KISH City/County: Chester Sampling Date: 5/25/18

Applicant/Owner: Adephia State: PA Sampling Point: DP-4

Investigator(s): SA Section, Township, Range: Lower Chichester Twp

Landform (hillslope, terrace, etc.): Terrace Local relief (concave, convex, none): None Slope (%): 0%

Subregion (LRR or MLRA): MLRA 149A Lat: 39.818562° Long: -75.435648° Datum: NAD 84

Soil Map Unit Name: _____ NWI classification: _____

Are climatic / hydrologic conditions on the site typical for this time of year? Yes X No _____ (If no, explain in Remarks.)

Are Vegetation _____, Soil _____, or Hydrology _____ significantly disturbed? Are "Normal Circumstances" present? Yes X No _____

Are Vegetation _____, Soil _____, or Hydrology _____ naturally problematic? (If needed, explain any answers in Remarks.)

SUMMARY OF FINDINGS – Attach site map showing sampling point locations, transects, important features, etc.

Hydrophytic Vegetation Present?	Yes _____	No X	**Is the Sampled Area within a Wetland?** **Yes** _____ **No** X
Hydric Soil Present?	Yes _____	No X	
Wetland Hydrology Present?	Yes _____	No X	

Remarks:

TC-W-01

HYDROLOGY

Wetland Hydrology Indicators:

Primary Indicators (minimum of one is required; check all that apply)

- ☐ Surface Water (A1)
- ☐ High Water Table (A2)
- ☐ Saturation (A3)
- ☐ Water Marks (B1)
- ☐ Sediment Deposits (B2)
- ☐ Drift Deposits (B3)
- ☐ Algal Mat or Crust (B4)
- ☐ Iron Deposits (B5)
- ☐ Inundation Visible on Aerial Imagery (B7)
- ☐ Water-Stained Leaves (B9)
- ☐ Aquatic Fauna (B13)
- ☐ Marl Deposits (B15) **(LRR U)**
- ☐ Hydrogen Sulfide Odor (C1)
- ☐ Oxidized Rhizospheres along Living Roots (C3)
- ☐ Presence of Reduced Iron (C4)
- ☐ Recent Iron Reduction in Tilled Soils (C6)
- ☐ Thin Muck Surface (C7)
- ☐ Other (Explain in Remarks)

Secondary Indicators (minimum of two required)

- ☐ Surface Soil Cracks (B6)
- ☐ Sparsely Vegetated Concave Surface (B8)
- ☐ Drainage Patterns (B10)
- ☐ Moss Trim Lines (B16)
- ☐ Dry-Season Water Table (C2)
- ☐ Crayfish Burrows (C8)
- ☐ Saturation Visible on Aerial Imagery (C9)
- ☐ Geomorphic Position (D2)
- ☐ Shallow Aquitard (D3)
- ☐ FAC-Neutral Test (D5)
- ☐ Sphagnum moss (D8) **(LRR T, U)**

Field Observations:

Surface Water Present?	Yes _____	No X	Depth (inches): _____
Water Table Present?	Yes _____	No X	Depth (inches): _____
Saturation Present? (includes capillary fringe)	Yes _____	No X	Depth (inches): _____

Wetland Hydrology Present? **Yes** _____ **No** X

Describe Recorded Data (stream gauge, monitoring well, aerial photos, previous inspections), if available:

Remarks:

VEGETATION (Four Strata) – Use scientific names of plants.

Sampling Point: DP-4

Tree Stratum (Plot size: _____)	Absolute % Cover	Dominant Species?	Indicator Status
1. Gleditsia triacanthos	10	N	FAC
2. Acer platanoides	20	Y	UPL
3. Morus alba	30	Y	FACU
4. Ailanthus altissima	10	N	FACU
5.			
6.			
7.			
8.			
	110 = Total Cover		
50% of total cover: _____	20% of total cover: _____		

Sapling/Shrub Stratum (Plot size: _____)			
1. Rosa multiflora	40	Y	FACU
2.			
3.			
4.			
5.			
6.			
7.			
8.			
	40 = Total Cover		
50% of total cover: _____	20% of total cover: _____		

Herb Stratum (Plot size: _____)			
1. Phragmites australus	30	Y	FACW
2.			
3.			
4.			
5.			
6.			
7.			
8.			
9.			
10.			
11.			
12.			
	30 = Total Cover		
50% of total cover: _____	20% of total cover: _____		

Woody Vine Stratum (Plot size: _____)			
1.			
2.			
3.			
4.			
5.			
	_____ = Total Cover		
50% of total cover: _____	20% of total cover: _____		

Dominance Test worksheet:

Number of Dominant Species That Are OBL, FACW, or FAC: 2 (A)

Total Number of Dominant Species Across All Strata: 5 (B)

Percent of Dominant Species That Are OBL, FACW, or FAC: 40 (A/B)

Prevalence Index worksheet:

Total % Cover of:		Multiply by:	
OBL species	0	x 1 =	0
FACW species	30	x 2 =	60
FAC species	10	x 3 =	30
FACU species	100	x 4 =	400
UPL species	40	x 5 =	200
Column Totals:	180 (A)		690 (B)

Prevalence Index = B/A = 3.83

Hydrophytic Vegetation Indicators:

___ 1 - Rapid Test for Hydrophytic Vegetation

___ 2 - Dominance Test is >50%

___ 3 - Prevalence Index is ≤3.0[1]

___ Problematic Hydrophytic Vegetation[1] (Explain)

[1]Indicators of hydric soil and wetland hydrology must be present, unless disturbed or problematic.

Definitions of Four Vegetation Strata:

Tree – Woody plants, excluding vines, 3 in. (7.6 cm) or more in diameter at breast height (DBH), regardless of height.

Sapling/Shrub – Woody plants, excluding vines, less than 3 in. DBH and greater than 3.28 ft (1 m) tall.

Herb – All herbaceous (non-woody) plants, regardless of size, and woody plants less than 3.28 ft tall.

Woody vine – All woody vines greater than 3.28 ft in height.

Hydrophytic Vegetation Present? **Yes** _____ **No** x

Remarks: (If observed, list morphological adaptations below).

SOIL

Sampling Point: DP-2

Profile Description: (Describe to the depth needed to document the indicator or confirm the absence of indicators.)

Depth (inches)	Matrix Color (moist)	Matrix %	Redox Features Color (moist)	Redox %	Type[1]	Loc[2]	Texture	Remarks
0-10	7.5YR 3/4	100					S, L	
10-18	7.5YR 5/6	100					S, L	

[1]Type: C=Concentration, D=Depletion, RM=Reduced Matrix, MS=Masked Sand Grains. [2]Location: PL=Pore Lining, M=Matrix.

Hydric Soil Indicators: (Applicable to all LRRs, unless otherwise noted.)

- ☐ Histosol (A1)
- ☐ Histic Epipedon (A2)
- ☐ Black Histic (A3)
- ☐ Hydrogen Sulfide (A4)
- ☐ Stratified Layers (A5)
- ☐ Organic Bodies (A6) **(LRR P, T, U)**
- ☐ 5 cm Mucky Mineral (A7) **(LRR P, T, U)**
- ☐ Muck Presence (A8) **(LRR U)**
- ☐ 1 cm Muck (A9) **(LRR P, T)**
- ☐ Depleted Below Dark Surface (A11)
- ☐ Thick Dark Surface (A12)
- ☐ Coast Prairie Redox (A16) **(MLRA 150A)**
- ☐ Sandy Mucky Mineral (S1) **(LRR O, S)**
- ☐ Sandy Gleyed Matrix (S4)
- ☐ Sandy Redox (S5)
- ☐ Stripped Matrix (S6)
- ☐ Dark Surface (S7) **(LRR P, S, T, U)**
- ☐ Polyvalue Below Surface (S8) **(LRR S, T, U)**
- ☐ Thin Dark Surface (S9) **(LRR S, T, U)**
- ☐ Loamy Mucky Mineral (F1) **(LRR O)**
- ☐ Loamy Gleyed Matrix (F2)
- ☐ Depleted Matrix (F3)
- ☐ Redox Dark Surface (F6)
- ☐ Depleted Dark Surface (F7)
- ☐ Redox Depressions (F8)
- ☐ Marl (F10) **(LRR U)**
- ☐ Depleted Ochric (F11) **(MLRA 151)**
- ☐ Iron-Manganese Masses (F12) **(LRR O, P, T)**
- ☐ Umbric Surface (F13) **(LRR P, T, U)**
- ☐ Delta Ochric (F17) **(MLRA 151)**
- ☐ Reduced Vertic (F18) **(MLRA 150A, 150B)**
- ☐ Piedmont Floodplain Soils (F19) **(MLRA 149A)**
- ☐ Anomalous Bright Loamy Soils (F20) **(MLRA 149A, 153C, 153D)**

Indicators for Problematic Hydric Soils[3]:

- ☐ 1 cm Muck (A9) **(LRR O)**
- ☐ 2 cm Muck (A10) **(LRR S)**
- ☐ Reduced Vertic (F18) **(outside MLRA 150A,B)**
- ☐ Piedmont Floodplain Soils (F19) **(LRR P, S, T)**
- ☐ Anomalous Bright Loamy Soils (F20) **(MLRA 153B)**
- ☐ Red Parent Material (TF2)
- ☐ Very Shallow Dark Surface (TF12)
- ☐ Other (Explain in Remarks)

[3]Indicators of hydrophytic vegetation and wetland hydrology must be present, unless disturbed or problematic.

Restrictive Layer (if observed):

Type: _____

Depth (inches): _____

Hydric Soil Present? **Yes** _____ **No** X

Remarks:

Appendix C - Photolog

PHOTOLOG

Project Name:	Location:
Adelphia Gateway Project	MVL 1, Upland DP1 Delaware County, PA

Date:	Photo:
2/27/2018	1

Coordinates:

39.897990º
-75.488493º

Comment:

Photo of upland maintained ROW facing northwest.

PHOTOLOG

Project Name:	Location:
Adelphia Gateway Project	MVL 1 Option A, Access Road, Delaware County, PA

Date:	Photo:
2/27/2018	2

Coordinates:

39.897807º
-75.488376º

Comment:

Photo of uplands in the vicinity of the access road..

PHOTOLOG

Project Name:	Location:
Adelphia Gateway Project	Chester Creek Gate, Wetland DP1 Chester County, PA

Date:	Photo:
2/27/2018	1

Coordinates:

39.931832º
-75.511167º.

Comment:

Photo of PEM wetland facing west.

PHOTOLOG

Project Name:	Location:
Adelphia Gateway Project	Chester Creek Gate, Upland DP2 Chester County, PA

Date:	Photo:
2/27/2018	2

Coordinates:

39.931581º
-75.511057º.

Comment:

Photo of uplands facing west.

PHOTOLOG

Project Name:	Location:
Adelphia Gateway Project	Chester Creek Gate, Wetland DP3 Chester County, PA

Date:	Photo:
2/27/2018	3

Coordinates:

39.932027º
-75.511326º.

Comment:

Photo of PEM wetland facing west.

PHOTOLOG

Project Name:	Location:
Adelphia Gateway Project	Chester Creek Gate, Upland DP4 Chester County, PA

Date:	Photo:
2/27/2018	4

Coordinates:

39.932137º
-75.511359º.

Comment:

Photo of uplands facing northwest.

PHOTOLOG

Project Name:	Location:
Adelphia Gateway Project	Paoli Pike Gate, Wetland DP1 Chester County, PA

Date:	Photo:
2/27/2018	1

Coordinates:

39.990924º
-75.54972º

Comment:

Photo of PEM wetland facing northwest.

PHOTOLOG

Project Name:	Location:
Adelphia Gateway Project	Paoli Pike Gate, Upland DP2 Chester County, PA

Date:	Photo:
2/27/2018	2

Coordinates:

39.990861º
-75.54956º.

Comment:

Photo of uplands facing northeast.

PHOTOLOG

Project Name:	Location:
Adelphia Gateway Project	Pickering Creek Gate, Wetland DP1 Chester County, PA

Date:	Photo:
2/28/2018	1

Coordinates:

40.098993º
-75.570876º

Comment:

Photo of workspace facing north towards access road.

PHOTOLOG

Project Name:	Location:
Adelphia Gateway Project	Pickering Creek Gate, Upland DP2 Chester County, PA

Date:	Photo:
2/28/2018	2

Coordinates:

40.098993º
-75.570876º

Comment:

Photo of uplands within workspace facing southwest.

PHOTOLOG

Project Name:	Location:
Adelphia Gateway Project	French Creek Gate, Wetland DP1 Chester County, PA

Date:	Photo:
2/28/2018	1

Coordinates:

40.133346º
-75.549027º

Comment:

Photo of uplands towards workspace facing north.

PHOTOLOG

Project Name:	Location:
Adelphia Gateway Project	French Creek Gate, Upland DP2 Montgomery County, PA

Date:	Photo:
2/28/2018	2

Coordinates:

40.133346º
-75.549027º

Comment:

Photo of uplands towards proposed access road facing south.

PHOTOLOG

Project Name:	Location:
Adelphia Gateway Project	Cromby Gate, Upland DP1 Chester County, PA

Date:	Photo:
2/28/2018	1

Coordinates:

40.151844º
-75.533063º

Comment:

Photo of uplands within workspace facing west.

PHOTOLOG

Project Name:	Location:
Adelphia Gateway Project	Cromby Gate, Upland DP2 Chester County, PA

Date:	Photo:
2/28/2018	2

Coordinates:

40.151844º
-75.533063º.

Comment:

Photo of uplands within workspace facing east.

PHOTOLOG

Project Name:	Location:
Adelphia Gateway Project	Schuylkill River Gate, Wetland DP1 Chester County, PA

Date:	Photo:
2/28/2018	1

Coordinates:

40.160791º
-75.528001º

Comment:

Photo of PEM wetland within workspace facing west.

PHOTOLOG

Project Name:	Location:
Adelphia Gateway Project	Schuylkill Creek Gate, Upland DP2 Chester County, PA

Date:	Photo:
2/28/2018	2

Coordinates:

40.160707º
-75.528375º

Comment:

Photo of uplands within workspace and access road facing west.

PHOTOLOG

Project Name:	Location:
Adelphia Gateway Project	Perkiomen Creek Gate, Wetland DP1 Montgomery County, PA

Date:	Photo:
3/1/2018	1

Coordinates:

40.216388º
-75.453608º

Comment:

Photo of PEM wetland facing east.

PHOTOLOG

Project Name:	Location:
Adelphia Gateway Project	Perkiomen Creek Gate, Upland DP2 Montgomery County, PA

Date:	Photo:
3/1/2018	2

Coordinates:

40.216286º
-75.453873º

Comment:

Photo of uplands facing north.

PHOTOLOG

Project Name:	Location:
Adelphia Gateway Project	Perkiomen Creek Gate, Wetland DP3 Montgomery County, PA

Date:	Photo:
3/1/2018	3

Coordinates:

40.216435º
-75.453259º

Comment:

Photo of PEM wetland and wetland ditch facing southwest.

PHOTOLOG

Project Name:	Location:
Adelphia Gateway Project	Perkiomen Creek Gate, Upland DP4 Montgomery County, PA

Date:	Photo:
3/1/2018	4

Coordinates:

40.216439º
-75.453222º

Comment:

Photo of uplands facing north.

PHOTOLOG

Project Name:	Location:
Adelphia Gateway Project	East Perkiomen Gate, Wetland DP1 Montgomery County, PA

Date:	Photo:
3/1/2018	1

Coordinates:

40.250648º
-75.441680º

Comment:

Photo of PEM wetland and wetland ditch facing south.

PHOTOLOG

Project Name:	Location:
Adelphia Gateway Project	East Perkiomen Gate, Wetland DP2 Montgomery County, PA

Date:	Photo:
3/1/2018	2

Coordinates:

40.250708º
-75.441732º

Comment:

Photo of uplands facing north.

PHOTOLOG

Project Name:	Location:
Adelphia Gateway Project	Quakertown TWS, Wetland DP1 Bucks County, PA

Date:	Photo:
3/1/2018	1

Coordinates:

40.404158º
-75.349192º

Comment:

Photo of PEM/PSS wetland facing northeast.

PHOTOLOG

Project Name:	Location:
Adelphia Gateway Project	Quakertown TWS, Upland DP2 Bucks County, PA

Date:	Photo:
3/1/2018	2

Coordinates:

40.404083º
-75.349172º

Comment:

Photo of uplands facing southwest.

PHOTOLOG

Project Name:	Location:
Adelphia Gateway Project	Transco Kish, Wetland DP1 Chester County, PA

Date:	Photo:
5/24/2018	1

Coordinates:

39.818562°
-75.435648°

Comment:

Photo of PFO wetland facing west.

PHOTOLOG

Project Name:	Location:
Adelphia Gateway Project	Transco Kish, Wetland DP2 Chester County, PA

Date:	Photo:
5/24/2018	2

Coordinates:

39.818562°
-75.435648°

Comment:

Photo of upland facing northwest.

PHOTOLOG

Project Name:	Location:
Adelphia Gateway Project	Transco Kish, Wetland DP3 Chester County, PA

Date:	Photo:
5/24/2018	3

Coordinates:

39.818562°
-75.435648°

Comment:

Photo of PEM/PSS wetland facing southeast.

PHOTOLOG

Project Name:	Location:
Adelphia Gateway Project	Transco Kish, Wetland DP4 Chester County, PA

Date:	Photo:
5/24/2018	4

Coordinates:

39.818562°
-75.435648°

Comment:

Photo of upland facing northwest.