## TABLE OF CONTENTS


| | | |
|---|---|---|
| **SECTION D** | **PROCESS INFORMATION** | **D-1** |
| D-1 | CONTAINERS | D-3 |
| | D-1a Containers with Free Liquids | D-3 |
| | D-1b Containers without Free Liquids | D-7 |
| D-2 | TANK SYSTEMS | D-10 |
| | D-2a Tank System Description | D-14 |
| | D-2b Existing Tank Systems | D-21 |
| | D-2c New Tank Systems | D-21 |
| | D-2d Containment and Detection of Releases | D-23 |
| | D-2e Controls and Practices to Prevent Overflows | D-26 |
| D-3 | WASTE PILES (NOT APPLICABLE) | D-28 |
| D-4 | SURFACE IMPOUNDMENTS (NOT APPLICABLE) | D-28 |
| D-5 | INCINERATORS (NOT APPLICABLE) | D-28 |
| D-6 | LANDFILLS (NOT APPLICABLE) | D-28 |
| D-7 | LAND TREATMENT (NOT APPLICABLE) | D-28 |
| D-8 | MISCELLANEOUS UNITS | D-28 |
| | D-8a Description of Miscellaneous Units | D-29 |
| | D-8b Waste Characteristics | D-41 |
| | D-8c Treatment Effectiveness | D-48 |
| | D-8d Environmental Performance Standards | D-48 |
| | D-8e Monitoring, Analysis, Inspection, Response, Reporting, and Corrective Action | D-84 |
| D-9 | BOILERS AND INDUSTRIAL FURNACES (NOT APPLICABLE) | D-88 |
| D-10 | CONTAINMENT BUILDINGS (NOT APPLICABLE) | D-88 |
| D-11 | DRIP PADS (NOT APPLICABLE) | D-88 |
| D-12 | BARRIER WALL | D-88 |

## TABLES


TABLE D-1 - LIST OF STORAGE TANKS IN AREAS 6 AND 7 D-11
TABLE D-2 - SUMMARY OF P&ID AND PFD ID NUMBERS FOR STORAGE TANKS D-18
TABLE D-3 - SUMMARY OF TANKS CONTAINING INCOMPATIBLE WASTE STREAMS D-19
TABLE D-4 - SUMMARY OF NFPA CODE 30 PROTECTIVE DISTANCES FOR TANKS POTENTIALLY STORING IGNITABLE WASTE D-20
TABLE D-5 - SUMMARY OF STORAGE TANK CONTAINMENT AREA VOLUMES D-25
TABLE D-6 - LIST OF THE MAJOR PIECES OF EQUIPMENT - MISCELLANEOUS UNITS D-30
TABLE D-7 - SUMMARY OF P&ID AND PFD ID NUMBERS FOR MISCELLANEOUS UNITS D-36
TABLE D-8 - CONTENTS AND CHARACTERISTICS OF MATERIALS STORED AND TREATED IN MISCELLANEOUS UNITS D-42
TABLE D-9 - SUMMARY OF PROCESS EQUIPMENT SECONDARY CONTAINMENT VOLUMES D-45
TABLE D-10 - SUMMARY OF AVAILABLE DATA FOR EFFECTIVENESS OF TECHNOLOGY D-49
TABLE D-11 - POTENTIAL PATHWAYS OF EXPOSURE D-50
TABLE D-12 - GROUNDWATER PROPERTIES FOR KIPC SITE D-53
TABLE D-13 - SERIES OF HYPOTHETICAL EVENTS LEADING TO A POTENTIAL RELEASE TO THE GROUNDWATER OR SUBSURFACE ENVIRONMENT D-54
TABLE D-14 - SERIES OF HYPOTHETICAL EVENTS LEADING TO A POTENTIAL RELEASE TO THE SOIL SURFACE D-63
TABLE D-15 - SERIES OF HYPOTHETICAL EVENTS LEADING TO A POTENTIAL RELEASE TO A WETLAND D-65
TABLE D-16 - SERIES OF HYPOTHETICAL EVENTS LEADING TO A POTENTIAL INDIRECT RELEASE TO A SURFACE WATER VIA THE GROUNDWATER D-66
TABLE D-17 - SERIES OF HYPOTHETICAL EVENTS LEADING TO A POTENTIAL DIRECT RELEASE TO A SURFACE WATER D-67
TABLE D-18 - EMISSION SOURCES AND AIR POLLUTION CONTROLS FOR MISCELLANEOUS UNITS D-69
TABLE D-19 - EFFECTIVENESS OF AIR POLLUTION CONTROL TECHNOLOGIES PROPOSED FOR ELCON'S MISCELLANEOUS UNIT OPERATIONS D-71
TABLE D-20 - SUMMARY OF NAAQS MONITORING DATA FOR BUCKS COUNTY, PA AND MERCER COUNTY, NJ D-75
TABLE D-21 - SUMMARY OF ACTUAL EMISSIONS FROM EXISTING EMISSION SOURCES IN BUCKS COUNTY D-77

TABLE D-22 - AIR QUALITY INDEX DATA FOR BUCKS COUNTY PENNSYLVANIA AND MERCER COUNTY NEW JERSEY FOR 2012 TO 2015 D-79
TABLE D-23 - SUMMARY OF ACTUAL HAPS FROM EXISTING EMISSION SOURCES IN BUCKS COUNTY D-80
TABLE D-24 - SUMMARY OF ACTUAL GHG EMISSIONS FROM SOURCES IN BUCKS COUNTY D-81

## FIGURES

FIGURE D-1 – PROPOSED FACILITY LAYOUT SCHEMATIC D-2
FIGURE D-2 – SIMPLIFIED PROCESS FLOW DIAGRAM D-16
FIGURE D-3 – PROPOSED ELCON OPERATIONS RELATIVE TO NEARBY SURFACE WATERS D-58
FIGURE D-4 – PERMITTED WATER INTAKE USERS AND WASTEWATER DISCHARGERS TO THE DELAWARE RIVER ZONE 2 D-60
FIGURE D-5 – AIR POLLUTION CONTROL CONFIGURATION D-72

## APPENDICES

APPENDIX D-1 – DRAWINGS
APPENDIX D-2 – TYPICAL INCOMING TOTE AND DRUM INFORMATION
APPENDIX D-3 – TYPICAL DRAIN AND SUMP MATERIALS OF CONSTRUCTION
APPENDIX D-4 – TYPICAL FLOOR COATING MATERIALS
APPENDIX D-5 – CONTAINMENT VOLUME CALCULATIONS
APPENDIX D-6 – TYPICAL SOLIDS CONTAINERS
APPENDIX D-7 – PRELIMINARY PIPING & INSTRUMENTATION DIAGRAMS
APPENDIX D-8 – PRELIMINARY PROCESS FLOW DIAGRAMS
APPENDIX D-9 – WRITTEN TANK AND EQUIPMENT ASSESSMENT
APPENDIX D-10 – GEOLOGIC INFORMATION
APPENDIX D-11 – STRUCTURAL CALCULATIONS
APPENDIX D-12 – FINAL ACT 2 REPORT FOR U.S. STEEL
APPENDIX D-13 – BCM 1997 REPORT
APPENDIX D-14 – AGRICULTURAL SECURITY AREAS
APPENDIX D-15 – PORTIONS OF ACT 2 FINAL REPORT FOR 32-ACRE PARCEL
APPENDIX D-16 – WETLANDS DELINEATION REPORT
APPENDIX D-17 – CLIMATOLOGICAL INFORMATION
APPENDIX D-18 – DRBC WATER QUALITY OBJECTIVES AND STATE WATER QUALITY REQUIREMENTS
APPENDIX D-19 – PORTIONS OF DRBC 2016 ASSESSMENT REPORT
APPENDIX D-20 – SAMPLING DATA FOR DELAWARE RIVER AT BILES CREEK
APPENDIX D-21 – ACT 2 DATA FOR NEARBY PROPERTIES

APPENDIX D-22 – METEOROLOGICAL DATA RECOMMENDED FOR USE BY DEPARTMENT FOR MODELING
APPENDIX D-23 – SUMMARY OF ACTUAL EMISSIONS FROM INDIVIDUAL EMISSION SOURCES IN BUCKS COUNTY
APPENDIX D-24 – NEW JERSEY SCREENING LEVEL GUIDELINES VALUES
APPENDIX D-25 – NON-NAAQS AMBIENT MONITORING DATA
APPENDIX D-26 – NON-NAAQS ACTUAL EMISSIONS REPORTED BY FACILITIES IN BUCKS COUNTY

# SECTION D

# PROCESS INFORMATION

This section describes how hazardous waste streams will be received, stored, and treated at the Elcon facility as required by 40 CFR 264 and 25 PA Code §264a. Activities of the facility as a whole are described in Section A of this permit application. The proposed design, construction, and operation of the waste treatment facility to meet the regulatory requirements for storage and treatment are discussed in more detail in this section.

This section provides detailed information on the equipment that will be used to store and treat the waste streams. Elcon's operations will include storage tanks, container storage, and equipment to treat the waste streams. Therefore, consistent with the Department's "Checklist for the Review of RCRA Part B Applications," Elcon is providing information specific to these three types of operations. Since there is some potential overlap between tanks that are used for storage and tanks that are part of the process, for purposes of addressing the requirements of this section, Elcon has grouped the equipment as follows:

- Waste Containers – Includes the liquid container storage area for incoming waste streams (Area 13 on Figure D-1) and the container storage area for solid waste residues from the treatment process (Area 8 on Figure D-1).

- Tank Systems – Includes storage tanks for incoming waste in Areas 6 and 7, as shown on the simplified Plant Layout in Figure D-1. Area 6 contains acid and flammable materials storage tanks and Area 7 contains general incoming waste storage tanks. The truck unloading area, labeled as Area 9 on Figure D-1, is also discussed in this area.

- Miscellaneous Units – Includes:
    - The process units in Area 5 (see Figure D-1), such as the crystallizer, distillation columns, and reactors
    - Tanks associated with the operations in Area 5, such as day tanks or feed tanks
    - Biological Treatment in Area 11 (See Figure D-1), includes treatment tanks, overflow tanks, and clean water tanks.

In addition to the secondary containment requirements for waste treatment and storage operations that are stipulated in the rules, Elcon is electing to install an additional barrier wall around the areas of the plant that will handle wastes. This barrier wall is not necessary to meet any regulatory requirements, but it will provide additional mitigative support in two areas: 1) to add protection to the active areas of the site in the event of a 500-year rain event, and 2) to provide additional localized spill control to assist with minimizing the impacts in the unlikely release of material from the secondary containment areas. Information related to this additional barrier wall is provided at the end of this section in Sub-section D-12.

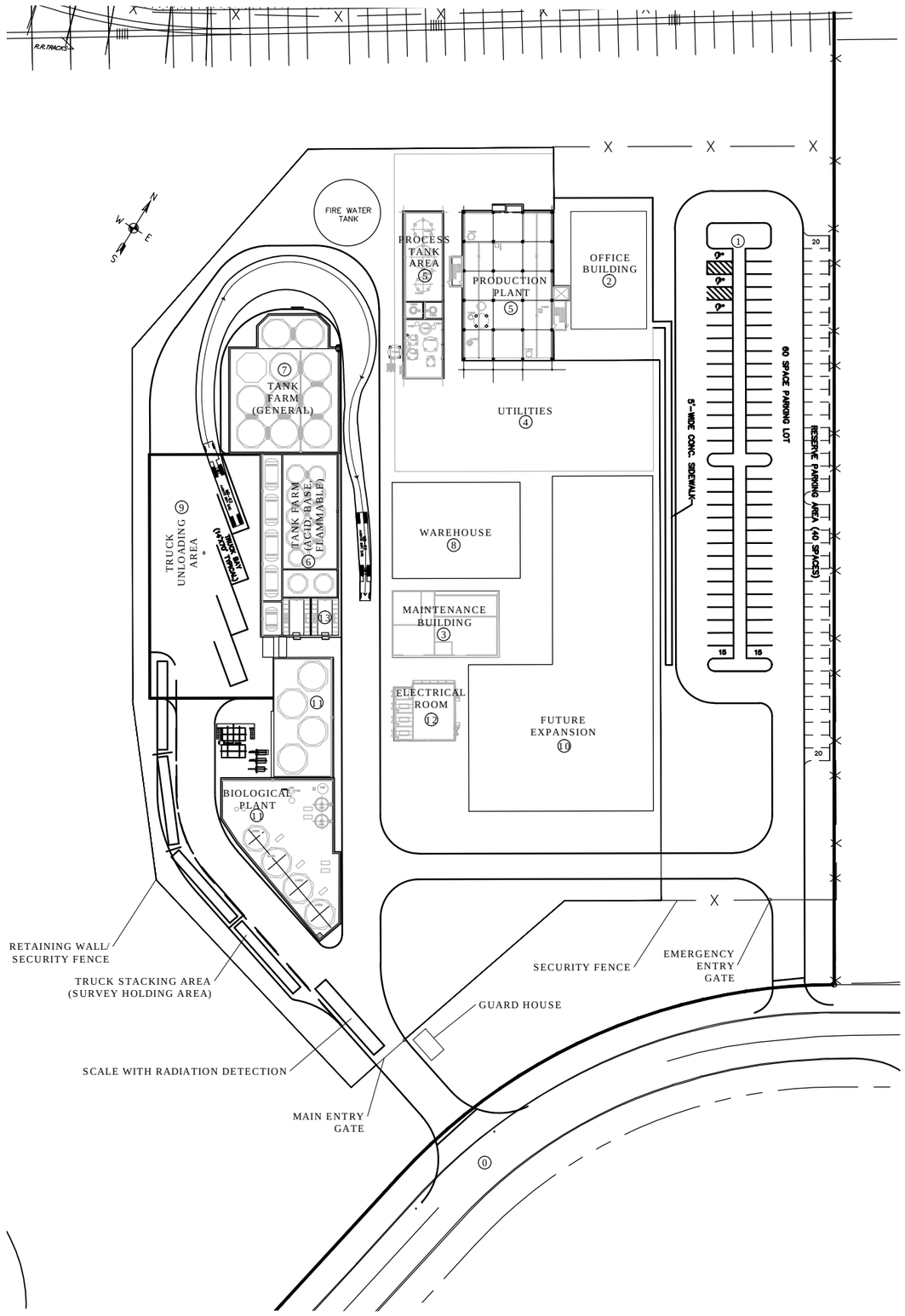


LEGEND

0. ENTRANCE WITH WEIGHING SYSTEM
1. PARKING LOT
2. OFFICE BUILDING
3. MAINTENANCE BUILDING INC. SPARE PARTS WAREHOUSING
4. UTILITIES–STEAM, COOLING TOWERS, COMP. AIR, ETC.
5. PRODUCTION PLANT, INCLUDING PROCESS TANK AREA
6. TANK FARM (ACID, BASE, FLAMMABLE)
7. TANK FARM (GENERAL)
8. PRODUCTION WAREHOUSE: RAW MATERIALS, FINISHED PRODUCTS
9. TRUCK UNLOADING AREA
10. PLANT FUTURE GROWTH (FUTURE U.S.A. HEADQUARTERS)
11. BIOLOGICAL PLANT
12. ELECTRICAL ROOM
13. INCOMING CONTAINER STORAGE.

— x — x — SECURITY FENCE

RETAINING WALL/SECURITY FENCE


ENGINEERS
ENGINEERING FOR INDUSTRY
1720 WALTON ROAD, PA 19422
PHONE: (610) 828–3078
BLUE BELL, PA 19422
FAX: (610) 828–7842


# PROPOSED FACILITY LAYOUT SCHEMATIC

## ELCON RECYCLING FACILITY

FALLS TOWNSHIP
BUCKS COUNTY, PENNSYLVANIA

| Date: | File: | Dwg. No. | Revision: |
|---|---|---|---|
| 12–28–16 | EV171065.01 | FIGURE D–1 | – |

## D-1 CONTAINERS

This section includes information on the container storage areas for incoming waste and for the solid waste residues from the treatment process. Container unloading from the trucks is addressed under the tank truck unloading in Section D-2.

The incoming waste streams will be received via trucks. It is anticipated that once the waste is sampled and accepted at the facility, the contents from the trucks will be transferred into appropriate storage tanks. However, Elcon will also have provisions at the facility for storing waste in containers.

Generated solid waste residues from the treatment processes will be placed in containers for off-site transport to an appropriate disposal facility. Generated waste residues in containers will be accumulated in the product warehouse prior to off-site transport. These generated wastes will be managed for less than 90 days in accordance with generator standards (40 CFR 261.34).

Incoming waste containers will contain free liquids and the information related to these containers is provided below in Sub-section D-1a. Processed sludges and salts placed in containers will have been processed, at a minimum, through a filter press. These materials are not anticipated to have free liquids. However, the sludge hoppers at the filter presses are located in an area that has secondary containment. Information on containers without free liquids is provided in Sub-section D-1b.

### D-1a Containers with Free Liquids

Incoming waste containers will contain free liquids. Information regarding the storage of these containers is provided below.

The site plan provided in Section B (Drawings C101 and C102 in Appendix B-1) shows the location of the incoming containerized waste storage area and demonstrates that the locations of these areas is more than 50 feet from the facility's property line, including storage areas for incompatible waste. The schematic on Figure D-1 also shows the general location of the container storage area (Area 13) at the facility.

The incoming waste storage area (Area 13) is divided into two sections to separate different waste types: acid and caustic materials. A wall divides the two storage areas. Each area has a separate entrance and sump/containment system. The acid and caustic container storage areas are similar, although the capacity of the acid storage area is slightly larger. Additional details on the containment system are provided in the sub-sections below. There is a roof over the entire containerized storage area to keep precipitation off of the storage containers and out of the secondary containment area and sump system.

The incoming waste storage containers will be closed systems, including transfers of material from the containers to storage tanks. The containers themselves and the container storage will not be connected to the air pollution control system since there will be no contact between the contents of the sealed containers (DOT-approved for shipping) and the atmosphere. The incoming waste storage area will comply with the requirements of 264 Subpart CC related to Air Emission Standards for Tanks, Surface Impoundments, and Containers. Section O of this application provides additional information related to conformance of the containers with Subpart CC.

*D-1a(1) Description of Containers*

The containers received by Elcon will be provided by its customers; therefore, Elcon must be able to handle and store a variety of types and sizes of containers. It is anticipated that most containerized waste will arrive in totes (275 gallons) or drums (55 gallons). The incoming containerized waste storage area will have a storage capacity of 22,275 gallons, taking into consideration aisle spacing and height of the storage containers as summarized below.

The acid portion of the container storage area can hold up 11,550 gallons, 42 totes, stacked three high. If drums are shipped, they will be stacked two high and up to 36 drums can be stored in the acid portion of the container storage area. Similarly, the caustic portion of the container storage area can hold up to 39 containers and 34 drums.

Drawing S106 in Appendix D-1 shows the proposed layout of the storage containers, including both totes and drums (up to 55 gallons). Drawing S106 in Appendix D-1 also provides a cross-section of the container storage area showing the roof.

The incoming containers will meet DOT requirements and be inspected using the procedures outlined in Section C-1a. They will not be placed in the container storage area if the containers do not appear to be in good condition (e.g., severe rusting, or apparent structural defects) or they are leaking. Damaged or leaking containers will be transferred to appropriate tanks or another container.

The materials will be shipped in containers compatible with the materials of construction of the container, or the container will be lined with materials which will not react with and are compatible with the material stored in the container. As mentioned above, the containers will be shipped in DOT-approved containers.

*D-1a(2) Container Management Practices*

All stored containers will be kept closed and will not be handled in any manner that could cause them to rupture or leak. The storage area will provide appropriate aisle space to allow for equipment, including fork lifts and hand trucks, to properly maneuver for movement of the containers. The container storage area will be under roof to prevent precipitation from falling on the containers. Containers will only be stacked in accordance with manufacturer specifications.

In the case of totes, the maximum stacking height will be three high. Drums, up to 55 gallons, would be stacked two high and configured such that the drum labels would be visible for all drums stored in the footprint of a tote. See Appendix D-2 for information on a typical totes and drums that may be used.

Reactive or ignitable waste will not be stored in the container storage area.

As shown on Drawing S106 in Appendix D-1, the containers will be configured with sufficient aisle spacing to provide access by forklifts or hand trucks and for purposes of inspection, containment, and remedial action. Emergency vehicles (e.g., fire trucks) themselves will not be able to enter the container storage building, but can be positioned adjacent to the area. The container storage area is small enough that it can be adequately protected by personnel with hoses and similar equipment. The container configuration also allows for visible access of the labels on all containers.

*D-1a(3) Secondary Containment System Design and Operation*

This sub-section provides information on the secondary containment system. All of the containers will be in secondary containment, which is designed to hold at least 10 percent of the volume of the containers. In this case, the maximum volume for each portion of the container storage area (acid and caustic) is based on storage of totes stacked three high since this container configuration holds the maximum volume of liquids. There are separate secondary containment areas for the acid and caustic storage areas.

Drawing S106 in Appendix D-1 shows the container storage areas, including the secondary containment system, roof, sump, and various cross-sectional views. The drawing also shows the dimensions of the acid and caustic container containment storage areas.

The containment storage area, including the secondary containment area, will be under roof to prevent precipitation from contacting the containers. The containers will be stored on a slight ledge above the floor of the containment area to keep the containers themselves away from any spilled materials. The floor is sloped from a highpoint of 23 feet (above mean sea level) to low point of 22.5 feet and drains to a drain and sump system made of materials that are resistant to the acids and caustic materials that will be stored in this container storage area. Information on the materials of construction for the floor drains and sumps is provided in Appendix D-3.

The floor and containment curbing will be cast-in-place reinforced concrete. The floor of the acid portion of the container storage area will be coated with a protective coating (e.g., Carboline Semstone Series coatings, epoxy, novolac epoxy, or vinyl ester). The floor of the caustic portion of the containment area will be coated with a concrete sealant (e.g., Euclid Everclear VOX, or similar). Information on the coatings and sealants is provided in Appendix D-4.

The materials collected in the sumps and drains will be collected and treated by Elcon's treatment technology since this is the same material that the technology is designed to treat.

40 CFR 264.175(d) referenced on the Department's checklist is not applicable to this acid/caustic containment area since this area will be used to store materials containing free liquids. This portion of the rule applies to certain listed waste codes that do not contain free liquids.

*Regarding Item D-1a(3)(a), Requirement for the Base or Liner to Contain Liquids, on the Department's checklist* – The base underlying the secondary containment system will be reinforced concrete with a coating resistant to the materials stored in the area (i.e., acid or caustic). See Appendix D-4 for information on the coating material. Additionally, the container storage area, including the containment area, will be covered by a roof to prevent precipitation from falling on the containers and the containment area. The concrete will be reinforced to prevent cracking and the coating will protect the concrete from the chemicals being stored. The area will be inspected routinely to ensure the integrity of the coating. See Section F for the inspection schedule for the container area.

*Regarding Item D-1a(3)(b), Containment System Drainage, of the Department's checklist* – The containers will be placed on a slightly elevated ledge to *prevent* any accumulating liquids from contacting containers. The floor within each side of the contained storage area (i.e., acid and caustic) slopes down to a drain and sump system to remove liquids. Additionally, the container storage area is covered to prevent precipitation from falling in the area. See Drawing S106 in Appendix D-1 for the container area drawing showing the storage container ledge, floor slope, and drain/sump system.

*Regarding D-1a(3)(c), Containment System Capacity, on the Department's checklist* – The acid portion of the container storage area has the capacity to store up to 11,550 gallons. The containment system will have sufficient capacity to contain 10 percent of the volume of the containers or the volume of the largest container, whichever is greater. In this case, the larger volume is 10 percent of the volume of the containers or 1,155 gallons (155 cubic feet). The containment volume for the acid portion of the container storage area is 182 cubic feet. Since this containment capacity is greater than 10 percent of the storage capacity's volume, the acid portion of the container storage more than meets the required containment volume.

Similarly, the caustic portion of the container storage area has the capacity to store up to 10,725 gallons. The larger required volume is 10 percent of the volume of the containers or 1,073 gallons (144 cubic feet). The containment volume for the caustic portion of the container storage area is 182 cubic feet. Since this containment capacity is greater than 10 percent of the storage capacity's volume, the caustic portion of the container storage more than meets the required containment volume.

Appendix D-5 provides the containment volume calculations for the incoming container storage areas.

*Regarding Item D-1a(3)(d), Control of Run-on, on the Department's checklist* – Run-on from precipitation will not enter the secondary container storage area. The container storage area is surrounded by a 6-inch concrete containment barrier to prevent run-on. See Drawing S106 in Appendix D-1 for a cross-section of the containment area floor and wall.

*Regarding Item D-1a(3)(e), Removal of Liquids from Containment System, on the Department's checklist* – Any accumulated liquids will be pumped from the sump and will be treated by Elcon's process since the treatment technology is already designed to treat the materials in storage. No analysis is needed because the contents of individual storage containers are already well documented.

D-1b Containers without Free Liquids

Solids generated by the treatment process will include treated sludge and salt residues. They are not expected to have free liquids or volatile organic compounds above the threshold for 264 Subpart CC requirements. The salt stream generated by Elcon will not be liquid due to the nature of the process (i.e., crystallization and drying). The sludge stream, which includes baghouse dust, will be processed in a drying oven and a thermal treatment heater; therefore, the moisture content will be low (less than 5%).

The solids residues will be accumulated in the Warehouse (Area 8 on Figure D-1). The Warehouse is an enclosed building that will also serve as secondary containment. The site plan provided in Section B (Drawings C101 and C102 in Appendix B-1 of Section B of this application) shows the location of the Warehouse and demonstrates that the location of this area is more than 50 feet from the facility's property line. The solid residues will be stored in "super sacks" or totes. The primary storage container is anticipated to be totes for the salts and "super sacks" for the dried sludge.

Elcon is seeking permission to accept and process Hazardous Waste Codes F020, F021, F023, and F027; the solids residues generated from the treatment of these waste codes will retain these waste codes. Therefore, as required by 40 CFR 264.175(d), the solid residues will be stored within secondary containment even though there are no free liquids associated with the solids residues.

Drawing S109 in Appendix D-1 shows the Warehouse, including the dimensions of the building. The floor and curbing around the Warehouse will be cast-in-place reinforced concrete. Drawing S109 also shows cross-sectional views of the floor and the building itself. The building will be a pre-engineered metal building. There are no floor drains or sumps in the building since this building will be storing dry material. The roof prevents rain from contacting the materials stored in the building.

*D-1b(1) Test for Free Liquids*

The solid wastes that are discharged from the heat treatment systems and the salt residues from the crystallizers will be visually inspected for the presence of free liquids. Documentation of the visual inspections will be maintained onsite. The proper operation of the sludge drying system and the salt crystallizer ensure that no free liquids are associated with these waste streams.

*D-1b(2) Description of Containers*

Elcon anticipates using big bags ("super sacks"), bulk containers, or drums for the solid waste storage. Approximately up to 500 tons of salt and sludge will be stored at the facility. Drawing S-109 in Appendix D-1 shows potential storage configurations of the various types of containers in the Warehouse. However, since the entire Warehouse is considered a secondary containment area, the containers can be placed in various configurations. In all cases, the content labels will be clearly visible and containers will not be stacked higher than recommended by the manufacturer (two high for drums and bulk containers). A rack system will be used for the "super sacks"/bulk containers and it will be able to store up to four units high. (The "super sacks" have approximately the same footprint.) It is anticipated that there will be up to approximately 520 "super sacks" or bulk containers onsite, not including the ones actively being filled in the Treatment Building. If drums are used, there will be two drums in the same footprint of each bulk container. During the change out of activated carbon in the carbon adsorption air pollution control device, which is used as a back-up air pollution device for the thermal oxidizer, spent carbon may also be stored in the Warehouse.

Only containers that are in good condition (i.e., free from apparent structural defects, or tears or rips, in the case of "super sacks") will be used. Only containers that are compatible with the salt or sludge will be used. Typical solids waste storage containers are provided in Appendix D-6. The example bulk container information provided in attachment D-6 are intended for containing hazardous materials for shipment to the final storage location (i.e., a landfill). The "super sacks" are polypropylene. The bulk containers are constructed with a 6 mil thick polyethylene liner and a triple wall fiber board wall.

*D-1b(3) Container Management Practices*

Once the containers are full, they will be closed and they will be accumulated for disposal at an appropriate off-site facility, such as US Ecology in Michigan or Quebec, Canada, or an equivalent hazardous waste disposal site that is permitted to accept the waste codes being generated by Elcon's process. The generated sludge and salts will be tested as described in Section C.3 of this application. The containers will be labeled in accordance with 40 CFR 262.34. Within the Warehouse, the containers will be placed such that they can be accessed on at least one side for inspection and emergency response.

The containers will remain closed during storage, except when waste is being added or removed. The containers will not be handled or stored in a manner which may cause a leak or rupture.

The containers without free liquids will not be used to store reactive or ignitable hazardous waste.

As shown on Drawing S-109 in Appendix D-1, the containers are configured with sufficient aisle spacing to provide access by forklifts or hand trucks and for purposes of inspection, containment, and remedial action. The bulk containers will be placed on a rack system that can accommodate the units stacked up to four high (see Appendix D-6). Containers will be maneuvered within the building using hand trucks or forklifts. The configuration of the containers allows sufficient room for handling using forklifts.

Emergency vehicles (e.g., fire trucks) themselves will not be able to enter the Warehouse, but can be positioned adjacent to the area. The Warehouse storage area is small enough that it can be adequately protected by personnel with hoses and similar equipment.

*D-1b(4) Container Storage Area Drainage*

The containers in the Warehouse will not store liquids. Additionally, the storage area is within a building to prevent precipitation from falling in the storage area. See Drawing S-109 in Appendix D-1 showing the building roof for the Warehouse.

40 CFR 264.175(c) listed on the Department's checklist is not applicable because the waste codes may include F020, F021, F023, or F027; therefore, 264.175(d) applies and secondary containment is required for the dried materials. The Warehouse has the capacity to store up to 500 tons of treated waste residues. The containment system will have sufficient capacity to contain 10 percent of the volume of the containers or the volume of the largest container, whichever is greater. In this case, the larger volume is 10 percent of the volume of the containers or 50 tons (approximately 1,390 cubic feet). The containment capacity of the building is approximately 3,178 cubic feet, even assuming that some of the floor area is used for other purposes. Since the containment capacity of the Warehouse is greater than 10 percent of the storage capacity's volume, the Warehouse container storage area more than meets the required containment volume. The containment volume calculations for the Warehouse are provided in Appendix D-5.

The containers will be within a building to prevent run-on. Curbing and grading at the building entrances will be used to control run-on. The building entrance has a sloped curb to prevent run-on and still allow vehicles to enter the building.

*D-1b(5) Weighing or Measuring Facilities*

The Elcon facility will be equipped with a weighing station to be used, as necessary, to weigh incoming waste streams. The incoming truck scale will have the capability to weigh a fully loaded truck (80,000 pounds). If requested by the Department, Elcon will have the precision of the truck scale certified by the Pennsylvania Department of Agriculture.

Elcon's hours of operation will be prominently displayed on a sign at the truck entrance to the facility. The lettering will be a minimum of 4 inches in height and of a color contrasting with its background.

## D-2 TANK SYSTEMS

Elcon will store liquid hazardous waste from off-site sources in tank systems. The tanks will be aboveground and located within diked tank farms (containment areas). For purposes of this portion of the application (i.e., Section D.2), Elcon has included storage tanks in Area 6 (acid, caustic, and flammable storage tanks) and Area 7 (general waste storage tanks) as well as the truck unloading Area 9. Tanks associated with process operations are addressed in Section D-8 of this application.

Table D-1 provides a summary of the storage tanks in each of the areas covered in Section D-2. The table includes basic information about each storage tank, such as volume, dimensions, materials of construction, etc. The diked areas will be constructed to structurally support the tank systems and to provide appropriate containment. The interior of each containment area will be coated with a material that is compatible with the type of waste that will be stored or treated in that area.

40 CFR 264.191 and 25 PA Code 264a.191 on the Department's checklist are not applicable as these requirements apply to existing tanks. Elcon is proposing to install new tanks.

**TABLE D-1**
**LIST OF STORAGE TANKS IN AREAS 6 AND 7**

| | Tag No. | Service | Contents | Nominal Volume (gal) | Nominal Dimensions | Thickness | Materials of Construction | Containment Area | Area |
|---|---|---|---|---|---|---|---|---|---|
| T- | 12102 | Storage tank unit 12 | Waste water | 26,500 | I.D. 13.2', height 25.9' | 1/8" - 1/4" | PE/PP/HDPE | Acid containment | 6 |
| T- | 80122 | Acids storage tank | Acids | 26,500 | I.D. 13.2', height 25.9' | first 1/3 of tank will be approx 2 ¼" thick | PE/PP/HDPE | Acid containment | 6 |
| T- | 80124 | Acids storage tank | Acids | 13,100 | I.D. 12', height 15.5' | first 1/3 of tank will be approx 1 ½" thick | PE/PP/HDPE | Acid containment | 6 |
| T- | 80126 | Acids storage tank | Acids | 13,100 | I.D. 12', height 15.5' | first 1/3 of tank will be approx 1 ½" thick | PE/PP/HDPE | Acid containment | 6 |
| T- | 80128 | Acids storage tank | Acids | 13,100 | I.D. 12', height 15.5' | first 1/3 of tank will be approx 1 ½" thick | PE/PP/HDPE | Acid containment | 6 |
| T- | 80130 | Acids storage tank | Acids | 13,100 | I.D. 12', height 15.5' | first 1/3 of tank will be approx 1 ½" thick | PE/PP/HDPE | Acid containment | 6 |
| T- | 80134 | Acids storage tank | Acids | 13,100 | I.D. 12', height 15.5' | first 1/3 of tank will be approx 1 ½" thick | PE/PP/HDPE | Acid containment | 6 |
| T- | 80140 | Acids storage tank | Acids | 13,100 | I.D. 12', height 15.5' | first 1/3 of tank will be approx 1 ½" thick | PE/PP/HDPE | Acid containment | 6 |
| T- | 80143 | Acids storage tank | Acids | 26,500 | I.D. 13.2', height 25.9' | first 1/3 of tank will be approx 2 ¼" thick | PE/PP/HDPE | Acid containment | 6 |
| T- | 12101 | Storage tank unit 12 | Waste water | 26,500 | I.D. 13.2', height 25.9' | 1/8" - 1/4" | PE | Acid containment | 6 |
| T- | 80160 | Caustic soda storage tank (fresh caustic, not waste) | Caustic soda | 11,200 | I.D. 11.48', height 14.44' | 1/8" - 1/4" | CS | Caustic containment | 6 |

**TABLE D-1**
**LIST OF STORAGE TANKS IN AREAS 6 AND 7**

| | Tag No. | Service | Contents | Nominal Volume (gal) | Nominal Dimensions | Thickness | Materials of Construction | Containment Area | Area |
|---|---|---|---|---|---|---|---|---|---|
| T- | 80162 | Caustic soda storage tank (waste) | Caustic soda | 11,200 | I.D. 11.48', height 14.44' | 1/8" - 1/4" | CS | Caustic containment | 6 |
| T- | 20357 | Rich distillate tank | Organic waste to 80% VOC | 13,200 | I.D. 10', length 22.5' | 3/16" | CS/SS | Flammable containment | 6 |
| T- | 23100 | Unit 23 feed tank | Organic waste water to 30% VOC | 13,200 | I.D. 10', length 22.5' | 3/16" | CS/SS | Flammable containment | 6 |
| T- | 23101 | Unit 23 feed tank | Organic waste water to 30% VOC | 13,200 | I.D. 10', length 22.5' | 3/16" | CS/SS | Flammable containment | 6 |
| T- | 23341 | C-23344 feed tank | Organic waste water to 30% VOC | 13,200 | I.D. 10', length 22.5' | 3/16" | SS | Flammable containment | 6 |
| T- | 20120A | Storage tank unit 20 | Waste water | 136,000 | I.D. 21.5', height 50' | 1/8" - 1/4" | CS - epoxy coating | Waste containment | 7 |
| T- | 20120B | Storage tank unit 20 | Waste water | 136,000 | I.D. 21.5', height 50' | 1/8" - 1/4" | CS - epoxy coating | Waste containment | 7 |
| T- | 20121A | Storage tank unit 20 | Waste water | 136,000 | I.D. 21.5', height 50' | 1/8" - 1/4" | CS - epoxy coating | Waste containment | 7 |
| T- | 20121B | Storage tank unit 20 | Waste water | 136,000 | I.D. 21.5', height 50' | 1/8" - 1/4" | CS - epoxy coating | Waste containment | 7 |
| T- | 20122A | Storage tank unit 20 | Waste water | 136,000 | I.D. 21.5', height 50' | 1/8" - 1/4" | CS - epoxy coating | Waste containment | 7 |

**TABLE D-1**
**LIST OF STORAGE TANKS IN AREAS 6 AND 7**

| | Tag No. | Service | Contents | Nominal Volume (gal) | Nominal Dimensions | Thickness | Materials of Construction | Containment Area | Area |
|---|---|---|---|---|---|---|---|---|---|
| T- | 20122B | Storage tank unit 20 | Waste water | 136,000 | I.D. 21.5', height 50' | 1/8" - 1/4" | CS - epoxy coating | Waste containment | 7 |
| T- | 21100A | Storage tanks | Waste water | 136,000 | I.D. 21.5', height 50' | 1/8" - 1/4" | CS - epoxy coating | Waste containment | 7 |
| T- | 21100B | Storage tanks | Waste water | 136,000 | I.D. 21.5', height 50' | 1/8" - 1/4" | CS - epoxy coating | Waste containment | 7 |
| T- | 21101A | Storage tanks | Waste water | 136,000 | I.D. 21.5', height 50' | 1/8" - 1/4" | CS - epoxy coating | Waste containment | 7 |
| T- | 21101B | Storage tanks | Waste water | 136,000 | I.D. 21.5', height 50' | 1/8" - 1/4" | CS - epoxy coating | Waste containment | 7 |
| T- | Future | Storage tanks | Waste water | 136,000 | I.D. 21.5', height 50' | 1/8" - 1/4" | CS - epoxy coating | Waste containment | 7 |

Notes:

1 All tanks are vertical except for Tanks T-20357, T23100, T-23101, and T-23341. These tanks are horizontal.

2 All tanks are designed to operate at ambient temperature.

3 All tanks are designed to operate at atmospheric pressure or at a slight negative pressure.

4 Materials of construction abbreviations: PE - polyethylene; PP - polypropylene; HDPE; - high density polyethylene; CS - carbon steel; SS - stainless steel; FRP - fiberglass reinforced plastic

All storage tanks containing any volatile organic compounds will vent to the thermal oxidizer system to control air emissions; venting of tanks containing acid or caustic to the thermal oxidizer system is optional. The thermal oxidizer will control both working and breathing losses of volatile organic compounds from the storage tanks. In the event that the thermal oxidizer is down, the storage tanks will vent to a carbon adsorption unit to provide continuous control of breathing losses. The air pollution control technologies will be fully addressed in a separate air permit application to the Department's Air Quality program in accordance with the Department's regulations. The air pollution control system will meet the Department's Best Available Technology requirements. Additional information on air emissions specifically related to the RCRA program is provided in Sections M, N, and O of this permit application.

40 CFR 264.192(f) and (g) are not applicable to Elcon's proposed storage tanks; external corrosion protection is not necessary for these aboveground tanks.

As required by 25 Code 264a.194, the storage tanks will be labeled to accurately identify the contents of the tanks.

D-2a <u>Tank Systems Description</u>

All of the storage tanks will be aboveground tanks. There will be four tank storage areas within the incoming waste tank farm – general wastewater, caustic, acid, and flammable areas. Each area will be individually diked with secondary containment. According to the treatment plan specific to each accepted waste, the waste is pumped from the incoming waste tank farm to one of the treatment systems within the processing plant (Area 5).

Figure D-1 provides a general location of the tank areas and Drawings C101 and C102 in Appendix B-1 of Section B of this application show the specific location of each of the storage tanks.

*D-2a(1) Dimensions and Capacity of Each Tank*

Table D-1 provides a list of the storage tanks and their nominal dimensions and capacities. There is a large storage tank capacity to allow for the operational flexibility due to the variety of waste streams that the facility can process. The overall processing capacity of the facility will not exceed 194,560 tons per year (176,470 metric tons per year).

*D-2a(2) Description of Feed Systems, Safety Cutoff, Bypass Systems, and Pressure Controls*

Feed to the tanks will be through closed pipe systems. During the unloading operation, Elcon will use check valves or dry disconnect couplings.

Each storage tank will be equipped with the following safety elements:

- On-off operated valve (to be operated from control room only) to assure the waste stream is unloading to the correct storage tank.

- On-off operated valve at the bottom of the tank (to be operated from control room only), connected to a closed piping system.

- Continuous level indicator for fill monitoring

- Level switch high to assure that the tank will not be overfilled, or redundant continuous level indicators

- Overflow line to protect the tank from over pressure in case both level switches fail, except for tanks with high organic materials. These tanks vent to the thermal oxidizer (or backup carbon adsorption unit) to equalize pressure.

- For tanks capable of storing materials containing volatile organic compounds, closed vent suction to maintain a slight vacuum in the tanks so the organic vapors will not vent to the atmosphere. The suction vents are connected to the thermal oxidizer (or backup carbon adsorption unit) for air pollution control.

Overfill protection consists of an interlock on the unloading pump, which stops the pump and closes the valve in case of a high level in the tank (according to continuous level indicator or level switch high).

No bypass systems are designed for the storage tanks.

There are no uncovered tanks in the storage tank area.

Pressure control – Except for three waste storage tanks, two acid (T-12101 and T-12102) and one caustic (T-80162), the storage tanks operate under slight negative pressure and are open to the atmosphere to bring air through the tank system to the thermal oxidizer. Pressure controls are not needed on the tanks because pressure is relieved to the thermal oxidizer under most conditions and can also be relieved to the activated carbon filter when the thermal oxidizer is shut down. Under no circumstances can the vent be relieved directly to the atmosphere. The three tanks that do not vent to the air pollution control system, operate at atmospheric pressure, although there is an option to connect these tanks to the air pollution control system.

*D-2a(3) Diagram of Piping, Instrumentation, and Process Flow*

Appendix D-7 provides preliminary diagrams of piping and instrumentation diagrams (P&IDs) for the proposed facility, including the tank systems. Figure D-2 is a simplified block flow diagram showing the general flow options through the facility and the interaction of the various tank/treatment systems. More detailed process flow diagrams (PFDs) are provided in Appendix D-8.

FIGURE D-2 – SIMPLE PROCESS FLOW DIAGRAM

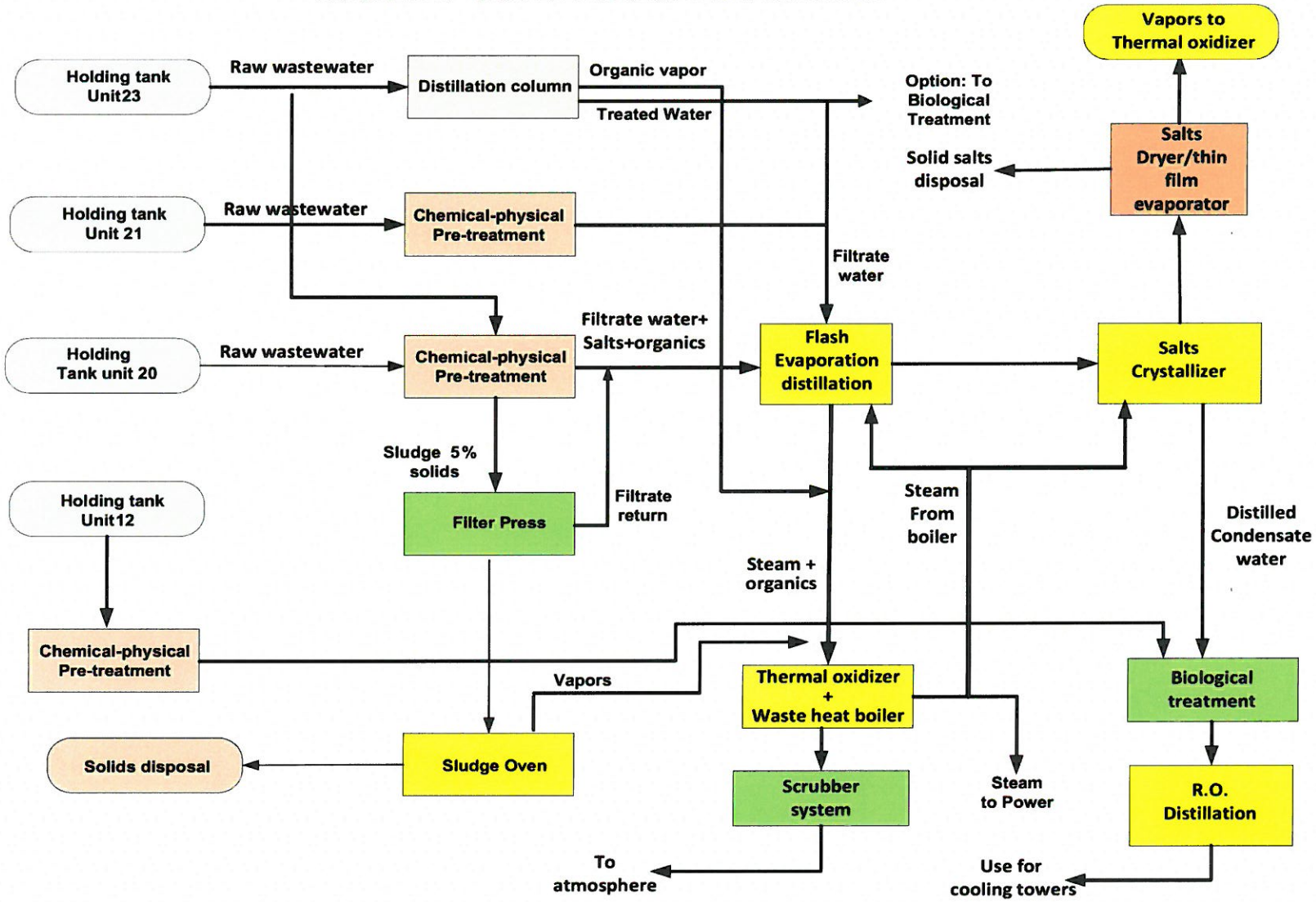

Table D-2 provides a list of the P&IDs and PFD drawing numbers for the storage tanks. Copies of all of the P&IDs are provided in Appendix D-7 and the PFDs are provided in Appendix D-8.

*D-2a(4) Ignitable, Reactive, and Incompatible Wastes*

Elcon will manage ignitable and incompatible waste streams; Elcon is not seeking permission to accept reactive waste streams.

Each waste stream will be profiled by the generator prior to acceptance by Elcon. Elcon will make a determination from the profile whether or not the waste stream is compatible with the facility and can be managed safely. Prior to acceptance of the waste stream, a specific waste treatment plan is prepared for each waste load such that it can be safely managed. Upon receipt at the facility, each load of waste will be tested to ensure that it meets the profile description and to determine its proper management. Additional details on the waste acceptance procedures is provided in Section C of this application.

Each tank is equipped with valves that can be opened only from the control room. When choosing a storage vessel for a specific waste stream, the facility software will only allow the correct valves to open to avoid misdirection of wastes. Reactors will be equipped with temperature indicators that will stop feed into the reactor in case of an uncontrolled reaction as indicated by an abnormal temperature rise.

Elcon will take appropriate precautions to prevent accidental ignition or reaction of ignitable waste. This waste will be separated and protected from sources of ignition or reaction, including but not limited to: open flames, smoking, cutting and welding, hot surfaces, frictional heat, sparks (static, electrical, or mechanical), spontaneous ignition (e.g., from heat-producing chemical reactions), and radiant heat. Elcon will confine smoking and open flames to specially designated locations, away from ignitable waste. "No Smoking" signs will be conspicuously placed wherever there is a hazard from ignitable waste. Smoking will not be permitted in any of the waste handling and processing areas.

Elcon will demonstrate compliance with 40 CFR 264.17(b), related to precautions related to ignitable and incompatible waste streams:

1. Through the use of actual data from the operations in Israel – In 12 years of operation at a similar facility in Israel, there have been no incidents. Similar equipment and operating procedures to prevent adverse reactions will be in place at the proposed plant in Falls Township.
2. Details on the tank system design and operation as provided in this application – Such as materials of construction, operating practices, training, instrumentation, and interlock systems.
3. Conformance with the National Fire Protection Association (NFPA) requirements for flammable and combustible liquids, as addressed in various places in this section of the application.

## TABLE D-2

## SUMMARY OF P&ID AND PFD ID NUMBERS FOR STORAGE TANKS

| Storage Tank IDs | PI&D No.[1] | PFD No.[2] |
|---|---|---|
| T-12101 and T-12102 | USA-12100-01-001 | USA-12100-01-100 |
| T-20121A and T20121B | USA-20100-01-002 | USA-20100-01-100 |
| T-20122A and T-20122B | USA-20100-01-003A | USA-20100-01-100 |
| T-20120A and T-201120B | USA-20100-01-003B | USA-20100-01-100 |
| T-21101A and T-21101B | USA-21100-01-001A | USA-21100-01-100 |
| T-21100A and T-21100B | USA-21100-01-001B | USA-21100-01-100 |
| T-23101 and T-23100 | USA-23100-01-001 | USA-23100-01-100 |
| T-23341 | USA-23300-01-002 | USA-23300-01-100 |
| T-20357 | USA-20300-01-002 | USA-20300-01-101 |
| T-80122, T-80124, T-80126, T-80128, and T-80143 | USA-80100-01-003 | USA-80100-01-100 |
| T-80130, T-80134, and T-80140 | USA-80100-01-004 | USA-80100-01-100 |
| T-80160 (not waste) and T-80162 | USA-80100-01-011 | USA-80100-01-100 |

[1] See Appendix D-7 for P&IDs
[2] See Appendix D-8 for PFDs

Incompatible wastes (acidic and alkaline) will be stored separately in dedicated tanks within segregated dikes; acid will not be stored in a caustic tank and vice versa. The following tanks will store incompatible wastes:

**TABLE D-3**
**SUMMARY OF TANKS CONTAINING INCOMPATIBLE WASTE STREAMS**

| Tanks | Contents | Containment Area | General Processing Description |
|---|---|---|---|
| T-12101 and T-12102 | Special processing acid waste | Area 6 – acid dike | Processed in dedicated reactor (R-12201) |
| T-80122, T-80124, T-80126, T-80128, T-80130, T-80134, T-80140, T-80143 | Acid waste | Area 6 – acid dike | Neutralized in one of several batch reactors |
| T-80162 | Caustic waste | Area 6 – caustic dike | Used for neutralizing acidic waste |

Special processing acid waste is essentially a high concentrated acid. The storage tanks are constructed of polyethylene and the associated pumps are constructed of polyvinylidene fluoride. The waste is treated in a dedicated reactor (R-12201) which is specifically designed to process this waste stream. The reactor is water jacketed to maintain a temperature below approximately 140 F (60 C) and the waste stream is neutralized to adjust the pH. After leaving the reactor, the waste is no longer acidic and goes on for further downstream processing (e.g., solids removal). pH is monitored at the reactor.

The acid in the remaining tanks (the eight tanks in the "801" series) is neutralized in one of several reactors, depending on the other constituents in the waste stream (e.g., ammonia), before further downstream processing. The materials of construction of each of the tanks in the "801" is provided in Table D-1; the tank materials are compatible with the acid waste streams potentially stored in the tanks. The materials of construction of the pumps associated with the acid tanks is polypropylene, polypropylene/Teflon, or polyvinylidene fluoride/Teflon.

The caustic waste in T-80162 is used to neutralize acid waste. (Fresh, non-waste caustic is also available, if needed.) The caustic waste tank is carbon steel as is the associated pump.

There is no mixing of incompatible wastes in the storage tanks. Therefore, there are no reactions as identified under 40 CFR Part 264.17(b) (heat or pressure, mist formation, etc.) as the incompatible wastes are segregated in tanks and the tanks themselves are further segregated within the secondary containment areas within separate diked areas, including separate sump systems.

Four tanks will be designed and designated to store flammable materials located in a separate diked area in Area 6. Tanks T-23100, T-23101, and T-23341 will store waste containing organics in the range of 10 to 30%. Tank T-20357 will store waste containing up to approximately 80% organics. Not all of the stored materials will meet the definition of "ignitable" under the 40 CFR

261.21 (i.e., an aqueous solution containing more than 24% alcohol and with a flash point less than 60 C (140 F)). Tanks T-23100 and T-23101 will be constructed of carbon steel or stainless steel. Tank T-23341 will be constructed of stainless steel and Tank T-20357 will be constructed of carbon steel or 316 stainless steel. Pumps will be constructed of compatible materials, such as stainless steel/Teflon.

The flammable materials in Tanks T-23100 and T-23101 are blended with low organic waste streams in one of the initial steps in the treatment process to render the material non-flammable by removing the organic component. The waste stream from T-23341 is initially treated in a distillation column (C-23344) to remove the organic component. The waste stream in Tank T-20357 is sent to a processing tank followed by a heat exchanger/evaporator to vaporize the stream. All treatment processes designed to remove organic compounds are vented to the air pollution control system to minimize emissions to the atmosphere.

The flammable tanks themselves are specifically designed to meet the NFPA code for storing ignitable or flammable materials. The flammable materials are stored in a diked area segregated from other materials. The design of the tanks, such as their electrical classification, lightning protection, no open flames in the area, and the fire suppression system, ensure the safe operation of these tanks.

The ignitable waste will be stored and treated in such a way that it is protected from any material or conditions that may cause the waste to ignite. Elcon will comply with the requirements for the maintenance of protective distances between the waste management area and any public ways, streets, alleys, or an adjoining property line that can be built upon as required in Tables 2-1 through 2-6 of the NFPA's "Flammable and Combustible Liquids Code," (1977 or 1981, specifically referenced in the rule) as summarized on the table below. The information provided in Table D-4 below is also consistent with the current version (2015) of the NFPA code.

**TABLE D-4**
**SUMMARY OF NFPA CODE 30 PROTECTIVE DISTANCES FOR TANKS POTENTIALLY STORING IGNITABLE WASTE**

| Parameter[1] | Required | Proposed by Elcon |
|---|---|---|
| Minimum distance to property line, ft | 20 ft | ≈ 350 ft |
| Minimum distance to any public way or nearest important building | 5 ft | ≈ 80 ft |
| Minimum shell-to-shell tank spacing | 1/6 the sum of adjacent tank diameters, but not less than 3 ft. In Elcon's case, 3 ft 4 in. | 3 ft 4 in |

[1] For the 13,200-gallon horizontal tank located within the jurisdiction of a public fire department.

D-2b Existing Tank Systems

The Elcon facility will be entirely new construction at a brownfield site. New tanks will be purchased. This section is not applicable.

D-2c New Tank Systems

The Elcon facility will be entirely new construction at a brownfield site. The tank systems will be designed to be compatible with the wastes to be managed in them and installed to be intact and free of potential releases to the environment as detailed below. The tank systems containing organic wastes will vent to a thermal oxidizer permitted by the Department under the Clean Air Act to meet emissions limitations. In accordance with 25 PA Code 264a.194, each tank will have a unique identifying number and will also be labeled as to its general function and contents.

*D-2c(1) Assessment of Tank System's Integrity*

Appendix D-9 contains a written assessment that has been prepared, reviewed, and certified by a qualified Professional Engineer as to the structural integrity and suitability for handling the hazardous waste streams that will be stored in the tanks. The written assessment addresses all of applicable information required by 40 CFR 264.192 attesting that the tank system has sufficient structural integrity and is acceptable for the storing and treating of the proposed hazardous waste streams. The assessment shows that the foundation, structural support, seams, connections, and pressure controls are adequately designed and that the tank system has sufficient structural strength, compatibility with the wastes that will be stored or treated, and corrosion protection to ensure that it will not collapse, rupture, or fail.

The assessment in Appendix D-9 includes the following information:

- Design standard(s) according to which tanks and the ancillary equipment are constructed
- Hazardous characteristics of the waste to be handled
- Design considerations to ensure that:
    - Tank foundations will maintain the load of a full tank
    - Tank systems will be anchored to prevent flotation or dislodgment if the containment system is flooded or if the tanks are subject to wind or seismic loads. As required under 40 CFR 264.18(a), none of Elcon's operations will be located within 200 feet of a fault which has had displacement in the Holocene time (i.e., the current geological time). A map showing historic earthquake activity around the proposed site is provided in Appendix A-5 of Section A of this application. Additionally, per a geological map of the area, there are no geological faults in the vicinity of Elcon's proposed site. See Appendix D-10.
    - Tank systems will withstand the effects of frost heave.

The requirements of 40 CFR 264.192(a)(3)(ii), pertaining to external corrosion, are not applicable as the external shells of the tanks or any external metal components of the tank system

will not be in contact with soil or water. 40 CFR 264.192(a)(4) is also not applicable because the tank system is not located underground.

*D-2c(2) Description of Tank System Installation and Testing Plans and Procedures*

Installation of the tank systems will be conducted by a licensed contractor with appropriate credentials and experience for such installations. Elcon anticipates that most of the tanks will be constructed onsite, although some of the smaller tanks (e.g., the tanks containing flammable substances) may be fabricated offsite. The Engineer of Record for the tank assessments will observe tank system installations and tightness testing. Prior to placing the tank systems into service, an independent, qualified, installation inspector or a qualified Professional Engineer will inspect the system as required by 40 CFR 264.192(b).

Elcon will ensure that proper handling procedures are adhered to in order to prevent damage to the system during installation. Prior to covering, enclosing, or placing a new tank system or component in use, an independent, qualified, installation inspector or a qualified Professional Engineer, either of whom is trained and experienced in the proper installation of tanks systems or components, will inspect the system for the presence of any of the following items:

- Weld breaks
- Punctures
- Scrapes of protective coatings
- Cracks
- Corrosion
- Any other structural damage or inadequate construction/installation

All discrepancies will be remedied before the tank system is covered, enclosed, or placed in use.

The tanks and ancillary equipment will be tested for tightness prior to being covered, enclosed, or placed in use. Elcon anticipates using hydrostatic testing for the tanks and ancillary equipment. If a tank system is found not to be tight, all repairs necessary to remedy the leak(s) in the system will be completed prior to the tank system being covered, enclosed, or placed into use.

Ancillary equipment will be supported and protected against physical damage and excessive stress due to settlement, vibration, expansion, or contraction. The piping system installation procedures described in American Petroleum Institute (API) Publication 1615 (November 1979), "Installation of Underground Petroleum Storage Systems," or ANSI Standard B31.3, "Petroleum Refinery Piping," and ANSI Standard B31.4 "Liquid Petroleum Transportation Piping System," will be used, where applicable, as guidelines for proper installation of piping systems.

40 CFR 264.192(c) does not apply because the tank system or component will not be underground.

D-2d Containment and Detection of Releases

Containment will be provided for the incoming waste storage tanks. Separate, diked containment areas will be in place as follows:

- General Wastewater Containment Area (Area 7) – includes tanks storing general incoming wastewater
- Flammable Containment Area (Area 6) – includes four tanks storing materials containing higher organic materials
- Acid Containment Area (Area 6) – includes storage tanks containing acidic waste
- Caustic Containment Area (Area 6) – includes two caustic storage tanks; one tank contains waste, the second contains fresh caustic
- Truck Unloading Containment Area (Area 9) – Tank truck and container unloading area

Table D-1 identifies the specific tanks that are part of each containment area. Figure D-1 shows the general locations of the storage areas. Drawing S101 in Appendix D-1 shows the general arrangement of the storage tanks and Drawings S103 and S104 provide containment and tank information for Areas 7 and 6, respectively. Drawing S105 provides information for the truck unloading containment area.

25 PA Code 264a.193 identified on the Department's checklist is not applicable as this portion of the rule applies to existing tanks.

The question on the Department's checklist related to detecting leaks within 24 hours is addressed under subsection D-2d(1) below.

Additional details on the secondary containment systems are provided in the sub-sections below.

*D-2d(1) Plans and Description of the Design, Construction, and Operation of the Secondary Containment System*

Secondary containment will be in place before the tank systems and components are placed into service. The secondary containment systems will be designed, installed, and operated to prevent any migration of wastes or accumulated liquid out of the system to the soil, groundwater, or surface water at any time during the use of the tank system. The containment system will also be capable of detecting and collecting releases and accumulated liquids until the collected material is removed.

The containment areas will be designed and constructed of reinforced concrete and will be sealed and coated with suitable materials (impervious and compatible with the wastes) to provide containment. The containment areas will be sloped to individual sumps for each separate area. Each containment area will be equipped with a sump pump that will pump the accumulated water (i.e., precipitation) or waste in the containment area to the appropriate storage tank for subsequent treatment in the processing plant. Drawings S104 and S103 in Appendix D-1 provide details on Containment Areas 6 (caustic, acid, and flammable materials) and 7 (general

wastewater), respectively. Drawing S105 includes the tank truck unloading area. The truck unloading area has been designed as a containment area guard against releases during unloading.

The tank systems within the containment areas will be installed in a manner that allows leaks or releases from the bottoms of the tanks to be readily detected. For the acid, caustic, and general waste storage tanks, each tank is on an elevated and visible concrete pad within its containment area. This octagonal pad for each of the tanks is depicted on Drawings S103 and S104 in Appendix D-1. The horizontal tanks containing flammable materials will be on saddles, so the bottoms of the tanks are clearly visible; see Drawing S104.

Regarding the specific technical requirements identified in 40 CFR 264.193(a) through (f), as addressed on the Department's checklist:

*Regarding Item D-2d(1)(a), Tank Age Determination, on the Department's checklist* – All of the tanks will be new and will comply with the secondary containment requirements prior to start-up.

*Regarding Item D-2d(1)(b), Requirements for Secondary Containment and Leak Detection, on the Department's checklist* – Drawings S103, S104, and S105 provide details on the design of the tank and truck unloading containment systems, including foundations.

The secondary containment systems will be constructed of reinforced concrete and sealed with a material that is compatible with the materials stored (or unloaded) in each area. See Appendix D-4 for information on the types of sealants that may be used. Drawings S103, S104, and S105 include cross-sectional areas of the containment areas. The containment areas have been designed to have sufficient strength and thickness to prevent failure owing to pressure gradients (including static head and external hydrological forces), loads, load combinations required by the Building Code, physical contact with the waste to which it is exposed, climatic conditions, and the stress of daily operation (including stresses from nearby vehicular traffic). The containment areas are on a foundation capable of providing support to the secondary containment system, resistance to pressure gradients above and below the system, and capable of preventing failure due to settlement, compression, or uplift. Structural calculations are provided in Appendix D-11.

The secondary containment areas each have individual sump systems that will collect precipitation as well as any spills. The containment area, including the sumps, will be inspected at least once per day to determine if any spills have occurred within the secondary containment area. The sumps will be equipped with level indicators that will pump out the sumps. This operational control meets the federal definition of a leak detection system.

The secondary containment areas are each sloped to drain and remove liquids resulting from leaks, spills, or precipitation. Spilled or leaked waste and accumulated precipitation will be removed from the secondary containment system within 24 hours using the pump and sump system.

The liquid collected in the secondary containment sump system, including precipitation, will be presumed to be a hazardous waste and will be managed and treated in the facility's hazardous

waste treatment system. No liquids collected in the secondary containment system will be discharged to waters of the United States or a Publicly Owned Treatment Works (POTW).

40 CFR 264.1101(b)(3)(iii) on the Department's completeness checklist for this section is not applicable because Elcon is not proposing to use a containment building for the storage tanks.

*Regarding Item D-2d(1)(c), Requirements for External Liner, Vault, Double-walled Tank or Equivalent Device, on the Department's checklist* – Elcon's secondary containment system for the storage tanks and truck unloading consists of a reinforced concrete barrier, with an appropriate chemical-resistant coating and chemical-resistant waterstops in the joints, that is external to the storage tanks and is beneath and on the sides of tanks which restricts the downward or lateral escape of hazardous waste to the environment. The truck unloading area is similarly constructed. The containment areas meet the intent of the definition of "liner" under 40 CFR 260.10 and are considered external liner systems.

The containment systems (i.e., external liner systems) are:

1. Designed and will be operated to contain 100 percent of the capacity of the largest tank within its boundary
2. Designed and will be operated to prevent run-on or infiltration of precipitation into the secondary containment system. The capacity of each containment area is sufficient to contain precipitation from a 25-year, 24-hour rainfall event.
3. Free of cracks or gaps
4. Designed and will be installed to surround the tank completely and to cover all surrounding earth likely to come into contact with the waste if the waste is released from the storage tank (i.e., capable of preventing lateral as well as vertical migration of the waste).

The containment calculations for the storage tank containment and truck unloading areas are provided in Appendix D-5 and summarized on Table D-5.

**TABLE D-5**
**SUMMARY OF STORAGE TANK CONTAINMENT AREA VOLUMES**

| Containment Area | Capacity of Largest Vessel ($ft^3$) | Precipitation Volume ($ft^3$) | Total Containment Volume Needed ($ft^3$) | Total Containment Volume Available[1] ($ft^3$) |
|---|---|---|---|---|
| Area 6 – Acid dike | 3,548 | 2,121 | 5,669 | 14,127 |
| Area 6 – Caustic dike | 1,495 | 515 | 2,010 | 3,366 |
| Area 7 – General Wastewater dike | 18,153 | 4,447 | 22,600 | 30,802 |
| Area 9 – Truck unloading area | 1,070 | 10,072 | 11,141 | 14,564 |

[1] Available volumes are conservatively calculated and do not include volumes from sumps and trenches.

The walls surrounding the storage tank containment areas will prevent run-on. Additionally, the graded elevation of the containment area in concert with the barrier wall will keep the storage tanks outside of the 500-year flood plain.

Materials of construction, including sealing materials, and routine inspections will be used to ensure that the secondary containment areas are free of cracks and gaps.

Drawings S103, S104, and S105 in Appendix D-1 demonstrate how the secondary containment area will completely cover the surrounding area.

*Regarding Item D-2d(1)(d), Secondary Containment and Leak Detection for Ancillary Equipment, on the Department's checklist* – Ancillary equipment will be provided with secondary containment (e.g., trench, jacketing, double-walled piping) that meets the requirements of 40 CFR 264.193(b) and (c) and described under item D-2d(1)(b) above except for:

- Welded flanges, welded joints, and welded connections, that are visually inspected for leaks on a daily basis;
- Sealless or magnetic coupling pumps and sealless valves, that are visually inspected for leaks on a daily basis; and
- Pressurized aboveground piping systems with automatic shut-off devices (e.g., excess flow check valves, flow metering shutdown devices, loss of pressure actuated shut-off devices) that are visually inspected for leaks on a daily basis.

*Regarding Item D-2d(1)(e), Containment Buildings Used as Secondary Containment for Tank Systems, on the Department's checklist* – 40 CFR 264.1101(b)(3)(iii) on the Department's checklist does not apply as the storage tanks are not managed in containment buildings.

*D-2d(2) Requirements for Tank Systems until Secondary Containment is Implemented*

Secondary containment will be provided for all tank systems prior to start-up of the facility.

*D-2d(3) Variance from Secondary Containment Requirements*

No variance is requested from the secondary containment requirements.

D-2e <u>Controls and Practices to Prevent Overflows</u>

Tanks will be designed and operated with on-off valves located at the inlet to the tank, a continuous level indicator, and high level switch. High level switches will be located below the overflow and will be equipped with an overflow alarm.

Control software will close (interlock) the inlet valve if a high level is reached (according to the level indicator) or if the high level switch alarm is actuated. This will cause the inlet to the tank to close and prevent additional waste from entering the tank.

The interlock systems for the storage tanks are provided on the P&IDs in Appendix D-7. Table D-2 above provides a list of the storage tanks and associated P&IDs.

Hazardous wastes or treatment reagents will not be placed in a tank system if they could cause the tank, its ancillary equipment, or the containment system to rupture, leak, corrode, or otherwise fail. Materials of construction and compatibility are discussed in Engineer's Assessment in Appendix D-9. Materials of construction are provided on Table D-1 and on the P&IDs in Appendix D-7.

Elcon will use appropriate controls and practices to prevent spills and overflows from tank or containment systems. These include at a minimum:

(1) Spill prevention controls (e.g., check valves, dry disconnect couplings);

(2) Overfill prevention controls (e.g., level sensing devices, high level alarms, automatic feed cutoff, or bypass to a standby tank), which are described above

There are no uncovered storage tanks in the storage tank farms; therefore, the requirements related to sufficient freeboard in uncovered tanks to prevent overtopping by wave or wind action or by precipitation is not applicable.

Elcon will develop and follow a schedule and procedure for inspecting overfill controls on the tank systems. The inspections will be conducted at least once each operating day for data gathered from monitoring and leak detection equipment (e.g., pressure or temperature gauges, monitoring wells) to ensure that the tank system is being operated according to its design.

Any deterioration or malfunction will be remedied. If a leak is confirmed, Elcon will notify the Department within 24 hours. Additionally, if required under 40 CFR 302, Elcon will notify the National Response Center of a release.

Elcon will inspect at least once each operating day:

- The tank systems to detect corrosion or releases of waste.
- The construction materials and the area immediately surrounding the externally accessible portion of the tank systems, including the secondary containment systems to detect erosion or signs of releases of hazardous waste (e.g., wet spots).

If Elcon elects to either use leak detection systems to alert facility personnel to leaks, or implement established workplace practices to ensure leaks are promptly identified, the inspections will be conducted at least weekly and will document the use of the alternate inspection schedule will be documented in the facility's operating record. This documentation will include a description of the established workplace practices at the facility.

Ancillary equipment that is not provided with secondary containment, will be inspected at least once each operating day.

There are no underground tanks containing hazardous waste, so inspections for cathodic protection systems are not applicable.

All required inspections will be documented.

25 PA Code 264a.195 on the Department's checklist is not applicable. This portion of the rule is reserved.

## D-3 WASTE PILES

No waste piles are proposed for hazardous waste management. Therefore, this section is not applicable to the Elcon Facility.

## D-4 SURFACE IMPOUNDMENTS

No surface impoundments are proposed for hazardous waste management. Therefore, this section is not applicable to the Elcon Facility.

## D-5 INCINERATORS

No incinerators are proposed for hazardous waste management. Therefore, this section is not applicable to the Elcon Facility.

## D-6 LANDFILLS

No landfills are proposed for hazardous waste management. Therefore, this section is not applicable to the Elcon Facility.

## D-7 LAND TREATMENT

No land treatment is proposed for hazardous waste management. Therefore, this section is not applicable to the Elcon Facility.

## D-8 MISCELLANEOUS UNITS

This section addresses miscellaneous units, which in this application includes equipment that is part of the waste treatment process. The equipment included in the miscellaneous units category does not readily fit into one of the standard types of treatment or storage units under the RCRA program. In Elcon's case, the miscellaneous units category includes a broad range of equipment, such as reactors, filter presses, intermediate tanks, and drying ovens. Tanks that are located in the incoming storage tank farm and the container storage area are addressed elsewhere in Section D and are not discussed under this sub-section.

The following areas, shown on Figure D-1, are addressed in this section:

- The process units in Area 5, such as the crystallizer, distillation columns, and reactors that are located within the Treatment Building

- Tanks or vessels associated with the operations in Area 5, such as day tanks or feed tanks, that are located outdoors
- Biological Treatment in Area 11, including treatment tanks, overflow tanks, and clean water tanks.

The miscellaneous units will be located, designed, constructed, operated, and maintained in a manner that will ensure protection of human health and the environment. Protection of human health and the environment includes prevention of releases that may have adverse effects on human health or the environment due to migration of waste constituents in: 1) surface water, or wetlands or on the soil surface considering; 2) the groundwater or subsurface environment; and 3) air.

Treatment effectiveness of the technology is addressed under Sub-section D-8d(3)(b).

D-8a Description of Miscellaneous Units

Table D-6 is a list of the major pieces of equipment that are addressed in this section. Not shown on this list are smaller pieces of equipment, which generally include intermediate or day tanks that are less than approximately 2 cubic meters (530 gallons), small heat exchangers and waste heat boilers, in-line filters, solids material handling systems (e.g., screw conveyors), pumps, blowers, motors, agitators, ancillary equipment tanks, and air pollution control devices. However, all the relevant equipment is addressed on the PI&Ds and is included within secondary containment systems. Table D-6 includes specifications for the key equipment, such as sizes, materials of construction, operating conditions for the equipment, and general content information. Sizes or capacities are also provided on the P&IDs in Appendix D-7.

The general locations of the miscellaneous units are provided on Figure D-1. More detailed locations of the individual pieces of equipment are provided in Appendix D-1 on the following drawings:

- Drawing S102A – Outdoor equipment associated with the operations in Area 5
- Drawings S102A through S102E – Operations within the Treatment Building in Area 5. Drawings S102A through S102D show the four floors and Drawing S102E provides an elevation plan of the Treatment Building
- Drawing S107 – Biological Treatment in Area 11, except for R-90220A, R-90220B, R-90221A, and R-90221B vessels
- Drawing S108 – Biological Treatment in Area 11, R-90220A, R-90220B, R-90221A, and R-90221B vessels

Additional details related to compliance with 40 CFR 264.601 and 264.602 follow.

# TABLE D - 6
# LIST OF MAJOR PIECES OF EQUIPMENT
# MISCELLANEOUS UNITS

| | Tag No. | Service | Agitated tank | Jacket | Contents | Nominal Volume (gal) | Nominal Dimensions | Nominal Thickness | Temperature, C (operating/design) | Materials of Construction | Containment | Area |
|---|---|---|---|---|---|---|---|---|---|---|---|---|
| R- | 12201 | Unit 12 Reactor | yes | option | Acidic Waste Water | 13,000 | 11' 2 ½" D X 17' 11" H | 0.5" | amb / 60 | FRP 470 | Process containment | 5 |
| R- | 12213 | Lime reactor | yes | | Lime Reactor | 3,000 | I.D. 8', length 8' | 0.5" | amb / 60 | CS | Process containment | 5 |
| T- | 12215 | Lime reactor | yes | | Lime Reactor | 3,000 | I.D. 8', length 8' | 0.5" | amb / 60 | SS | Process containment | 5 |
| T- | 12231 | Water Tank | | | Effluent water | 3,000 | I.D. 8', length 8', cone - 3' | 0.5" | amb / 60 | PE/PP/SS | Process containment | 5 |
| R- | 12267 | Reactor | yes | | Effluent water | 500 | I.D. -3'3", length 16' | 3/16" | amb/60 | PE | Process containment | 5 |
| T- | 12263 | Settler | | | Effluent water | 5,000 | I.D. 7 '3", length 13' - 16' | 3/16" | amb/60 | PE/PP/FRP 470 | Process containment | 5 |
| R- | 20206 | Non-continuous Reactor | yes | | Wastewater | 13,000 | I.D.11' 6", length 17' | 0.5" | amb / 60 | SS/FRP 470 | Production plant | 5 |
| R- | 20210 | Non-continuous Reactor | yes | | Wastewater | 13,000 | I.D.11' 6", length 17' | 0.5" | amb / 60 | SS/FRP 470 | Production plant | 5 |
| R- | 20214 | Non-continuous Reactor | yes | | Wastewater | 13,000 | I.D.11' 6", length 17' | 0.5" | amb / 60 | SS/FRP 470 | Production plant | 5 |
| D- | 20220 | Settler unit 20 | | | Wastewater | 30,000 | I.D. 20', length 15', cone - 6.5' | 1/8" - 1/4" | amb / 60 | CS with epoxy or PE lining | Production Plant | 5 |
| T- | 20224 | Overflow Tank from Settler Unit 20 | | | Wastewater | 700 | I.D. 4'6", length - 4' | 3/16" | amb / 60 | SS | Process containment | 5 |
| T- | 20401 | FED Feed | | | Wastewater | 25,000 | I.D. 13'-15', length 20-30' | 1/8" - 1/4" | amb / 100 | CS | Process containment | 5 |
| T- | 20411 | FED Flash Tank | | | Wastewater | 5,000 | I.D. 7 '3", length 13' - 16' | 3/16" | 110 / 180 | SS | Production plant | 5 |

# TABLE D - 6
# LIST OF MAJOR PIECES OF EQUIPMENT
# MISCELLANEOUS UNITS

| | Tag No. | Service | Agitated tank | Jacket | Contents | Nominal Volume (gal) | Nominal Dimensions | Nominal Thickness | Temperature, C (operating/design) | Materials of Construction | Containment | Area |
|---|---|---|---|---|---|---|---|---|---|---|---|---|
| T | 20402 | Crystallizer Feed Tank | yes | | Brine | 32,000 | I.D. 13', length 15', cone - 6.5' | 1/8" - 1/4" | amb / 100 | CS with epoxy or PE lining | Process containment | 5 |
| T- | 20501 | Crystallizer | yes | | Brine | 5,000 | I.D. 7 ' 3" , length 13' - 16' | 3/16" | 110 / 180 | SS | Production plant | 5 |
| T | 20528 | Crystallizer Condensate Tank | | | Effluent water | 1,500 | I.D. 6', length 7' | 5/16" | amb / 100 | SS | Production plant | 5 |
| T- | 20525 | Centrifuge Effluent | | | Concentrated Brine | 500 | I.D. 2.5 '- 3' 3" , length 13' - 16' | 3/16" | 110 / 180 | SS | Production plant | 5 |
| H- | 20540 | Thin Film Evaporator | | | Brine | 1,500 | I.D. 6', length 7' | 5/16" | 60 / 180 | SS | Production plant | 5 |
| T- | 20613 | Scrubber tank | | | Sludge and water | 650 | I.D. - 5.9', length 9.5' | 5/16" | 60 / 180 | SS | Production plant | 5 |
| T- | 20623 | Sludge silo - product | | | Dry sludge | 20,000 | I.D. 9'-10' , length - 25'-30' | 1/8" - 1/4" | amb/60 | CS | Production plant | 5 |
| R- | 23201 | Unit 23 reactor | yes | yes | Organic waste water 10% VOC | 3,000 | I.D. 8' , length 8' | 0.5" | amb / 100 | SS | Production plant | 5 |
| C- | 23344 | Distillation column | | | Wastewater | 1,750 | I.D. 1.5' , length - 33' | 1/4" | 111 / 180 | SS | Production plant | 5 |
| T- | 80190 | Acid daily tank | | | Acids | 500 | I.D. 3' 3" , length 16' | 1" | amb / 60 | PE/PP/HDPE | Process containment | 5 |
| T- | 80191 | Caustic daily tank | | | Caustic soda | 500 | I.D. 3' 3" , length 16' | 3/16" | amb / 60 | PE/PP/HDPE | Process containment | 5 |
| T- | 90120 | treating water collection tank | yes | | Effluent water | 5,000 | I.D. 7 ' 3" , length 13' - 16' | first 1/3 of tank will be approx 1 ½" thick | amb/60 | PE | Biological treatment | 11 |
| T | 90204 | Biologic treatment feed tank | | | Effluent water | 26,500 | 13' 2 ½" dia. X 25' 10 ¾" tall | first 1/3 of tank will be approx 2 ¼" thick | amb / 60 | PE / HDPE/CS/SS | Biological treatment | 11 |

# TABLE D - 6
# LIST OF MAJOR PIECES OF EQUIPMENT
# MISCELLANEOUS UNITS

| | Tag No. | Service | Agitated tank | Jacket | Contents | Nominal Volume (gal) | Nominal Dimensions | Nominal Thickness | Temperature, C (operating/design) | Materials of Construction | Containment | Area |
|---|---|---|---|---|---|---|---|---|---|---|---|---|
| T | 90206 | Biologic treatment feed tank | | | Effluent water | 26,500 | 13' 2 ½" dia. X 25' 10 ¾" tall | first 1/3 of tank will be approx 2 ¼" thick | amb / 60 | PE / HDPE/CS/SS | Biological treatment | 11 |
| R- | 90208 | Aerobic reactor | | | Effluent water | 1,500 | I.D. 2', length 49'6" | 5/16" | amb / 60 | PE / HDPE/PP | Biological treatment | 11 |
| R- | 90209 | Aerobic reactor | | | Effluent water | 66,000 | I.D. 13'6", length 55'6" | 5/16" | amb / 60 | SS | Biological treatment | 11 |
| R- | 90220A | Biologic treatment | | | Effluent water | 110,000 | 8 x 8 x 6 | 1' 4" | amb/60 | CS, with epoxy | Biological treatment | 11 |
| R- | 90220B | Biologic treatment | | | Effluent water | 110,000 | 8 x 8 x 6 | 1' 4" | amb/60 | CS, with epoxy | Biological treatment | 11 |
| R- | 90221A | Biologic treatment | | | Effluent water | 110,000 | 8 x 8 x 6 | 1' 4" | amb/60 | CS, with epoxy | Biological treatment | 11 |
| R- | 90221B | Biologic treatment | | | Effluent water | 110,000 | 8 x 8 x 6 | 1' 4" | amb/60 | CS, with epoxy | Biological treatment | 11 |
| T- | 90226 | Overflow | | | Effluent water | 500 | I.D. 4'6" , length - 4' | 3/16" | amb/60 | SS | Biological treatment | 11 |
| D- | 90225 | Settler | | | Effluent water | 25,000 | I.D. 20', length 15' , cone - 6.5' | 1/8" - 1/4" | amb/60 | CS with epoxy or PE lining | Biological treatment | 11 |
| T- | 90235 | Clean water tank | | | Effluent water | 110,000 | I.D. 21' 4", length 39' 5" | 1/8" | amb/60 | CS | Biological treatment | 11 |
| T- | 90241 | Clean water tank | | | Effluent water | 110,000 | I.D. 21' 4", length 39' 5" | 1/8" | amb/60 | CS | Biological treatment | 11 |
| T- | 90260 | Clean water tank | | | Effluent water | 55,000 | I.D. 21' 4", length 20' 5" | 1/8" | amb/60 | CS | Biological treatment | 11 |
| R- | 90401 | Ammonia treatment reactor | | | Effluent water | 800 | I.D. 4'5", 7'H | NA | amb/60 | CS/SS/PE | Biological treatment | 11 |
| T- | 90402 | Overflow | | | Effluent water | 800 | I.D. 4'5", 7'H | | amb/60 | CS/SS | Biological treatment | 11 |

# TABLE D - 6
# LIST OF MAJOR PIECES OF EQUIPMENT
# MISCELLANEOUS UNITS

| | Tag No. | Service | Agitated tank | Jacket | Contents | Nominal Volume (gal) | Nominal Dimensions | Nominal Thickness | Temperature, C (operating/design) | Materials of Construction | Containment | Area |
|---|---|---|---|---|---|---|---|---|---|---|---|---|
| T- | 90405 | MVR feed tank | | | Effluent water | 26,500 | I.D. 13', H 27' | | amb/60 | CS | Biological treatment | 11 |
| T- | 90411 | MVR flash tank | | | Effluent water | 5,000 | I.D. 7 ' 3" , length 13' - 16' | 3/16" | 110 / 180 | SS | Biological treatment | 11 |
| FP- | 12240 | Filter press | | | Wastewater | NA | 16' L X 5' W X 5' H | NA | amb/60 | SS | Production plant | 5 |
| F- | 12243 | Centrifuge -- gypsum | | | Gypsum | 25 gpm | 12' L X 5' W X 5' H | NA | amb/60 | SS316 | Production plant | 5 |
| T- | 12270 | Process Water Tank | | | Process water | 13,200 | 11 2 ½ D 17' 11" H | | amb/60 | FRP | Production plant | 5 |
| FP- | 20218A | Filter Press | | | Wastewater | 1 $m^2$/43 plates/1 $m^3$ | 16' L X 5' W X 5' H | NA | amb/60 | PP | Production plant | 5 |
| FP- | 20218B | Filter Press | | | Wastewater | 1 $m^2$/43 plates/1 $m^3$ | 16' L X 5' W X 5' H | NA | amb/60 | PP | Production plant | 5 |
| FP- | 20218C | Filter Press | | | Wastewater | 1 $m^2$/43 plates/1 $m^3$ | 16' L X 5' W X 5' H | NA | amb/60 | PP | Production plant | 5 |
| H- | 20410C | FED Evaporator | | | Waste liquid solvent | 9E6 kcal/hr | 4' L X 4' W | NA | Shell:170/200 Tube: 110/180 | SS | Production plant | 5 |
| H- | 20410D | FED Evaporator | | | Waste liquid solvent | 9E6 kcal/hr | 4' L X 4' W | NA | Shell:170/200 Tube: 110/180 | SS | Production plant | 5 |
| H- | 20513A | Crystallizer re-boiler | | | Brine | 3E6 kcal/hr | 4' L X 4' W | NA | Shell:170/200 Tube: 110/180 | SS | Production plant | 5 |
| F- | 20522 | Salts centrifuge | | | Brine | 25 gpm | 13' L X 5' W | NA | 112/140 | SS316 | Production plant | 5 |
| F- | 20524 | Salts centrifuge | | | Brine | 25 gpm | 13' L X 5' W | NA | 112/140 | SS316 | Production plant | 5 |
| O- | 20608 | Rotary oven | | | Sludge | 1,500 kg/hr | 46 L X 1.3' I.D. | NA | 150/800 | CS | Production plant | 5 |

# TABLE D - 6
# LIST OF MAJOR PIECES OF EQUIPMENT
# MISCELLANEOUS UNITS

| | Tag No. | Service | Agitated tank | Jacket | Contents | Nominal Volume (gal) | Nominal Dimensions | Nominal Thickness | Temperature, C (operating/design) | Materials of Construction | Containment | Area |
|---|---|---|---|---|---|---|---|---|---|---|---|---|
| O- | 20621 | Drying heater | | | Sludge | 1,100 kg/hr | 23' L, 3.2'I,D. | NA | 550/700 | SS | Production plant | 5 |
| T- | 90240 | Ultra-filtration system | | | Treated wastewater | Per vendor | Varies | Varies | amb/60 | Varies | Biological treatment | 11 |
| F- | 90250 | RO & NF Treatment | | | Treated wastewater | Per vendor | Varies | Varies | amb/60 | Varies | Biological treatment | 11 |
| T- | 20509 | Thin Film Evaporator Feed Tank | | | Brine | 1,320 | 4.5' I.D., 12' H | | amb/60 | SS | Production plant | 5 |

Notes:

1 Smaller tanks and service vessels may not be listed. However, all equipment will comply with RCRA requirements, such as containment, inspections, etc.

2 All tanks are designed to operate at atmospheric pressure or at a slight negative pressure, except as follows: 1) FP-12240, F-12243, FP-20218 A/B/C are at 8 barg; 2)Shell of H-2041 OC/D and H-25513A is at 7/12 barg, where the first number operating and second is design; and 3) F-20522 and F-20524 is at atm/8 barg.

3 Materials of construction abbreviations: PE - polyethylene; PP - polypropylene; HDPE; - high density polyethylene; CS - carbon steel; SS - stainless steel; FRP - fiberglass reinforced plastic

The process tanks and equipment addressed in this section are included in the written tank assessment provided in Appendix D-9. This assessment report has been written and certified by a qualified Professional Engineer as to the structural integrity and suitability for handling the hazardous waste streams that will be stored or treated in the process tanks and process equipment. The written assessment addresses the all of relevant information required by 40 CFR 264.192, related to tanks, although not all of the process equipment is considered a tank under the RCRA rules. The assessment report attests that the process tank systems and process equipment have sufficient structural integrity and are acceptable for the storing and treating of the proposed hazardous waste streams. The assessment shows that the foundations, structural supports seams, connections, and pressure controls are adequately designed and that the tank systems and process equipment have sufficient structural strength, compatibility with the wastes that will be stored and treated, and corrosion protection to ensure that they will not collapse, rupture, or fail.

The assessment in Appendix D-9 includes the following information:

- Design standard(s) according to which tanks and the ancillary equipment will be constructed
- Design standard(s) according to which the process equipment will be constructed
- Hazardous characteristics of the waste to be handled
- Design considerations to ensure that:
    - Tank and process equipment foundations will maintain the load of a full tank and process equipment
    - Tank systems are anchored to prevent flotation or dislodgment if the containment system is flooded or if the tanks are subject to wind or seismic loads.
    - Tank systems or process equipment will withstand the effects of frost heave.

Additional information on the process tank and equipment design is provided on the drawings in Appendix D-1, the P&IDs in Appendix D-7, and the PFDs in Appendix D-8. Table D-7 summarizes the drawing titles for the major components of the process equipment. Equipment locations are provided on Drawings S102A through S102D, S107, and S108 in Appendix D-1.

*Description of Feed Systems, Safety Cutoff, Bypass Systems, and Pressure Controls –*

Feed to the process tanks and vessels will be through closed pipe systems.

A wide variety of equipment falls into the "miscellaneous units" category, ranging from small day tanks, to reactors and filter presses. Details on the feed and interlock systems for each piece of equipment are provided on the P&IDs in Appendix D-7. The "on-off" valves are only actuated from the control room to assure that each waste stream is loading or unloading to the correct piece of equipment. There are interlocks in place that prevent multiple valves from opening at the same time and prevent mixing of incompatible materials.

## TABLE D-7
## SUMMARY OF P&ID AND PFD ID NUMBERS FOR MISCELLANEOUS UNITS

| Equipment IDs | PI&D No. | PFD No. |
|---|---|---|
| R-12201 | USA-12200-01-001 | USA-12200-01-100 |
| R-12213 and T-12215 | USA-12200-01-002 | USA-12200-01-100 |
| T-12231 | USA-12200-01-004 | USA-12200-01-100 |
| FP-12240 | USA-12200-01-005A | USA-12200-01-100 |
| F-12243 | USA-12200-01-005B | USA-12200-01-100 |
| T-12270, R-12267, T-12263, and T-12264 | USA-12200-01-006 | USA-12200-01-100 |
| R-20206 | USA-20200-01-003 | USA-20200-01-101 |
| R-20210 | USA-20200-01-004 | USA-20200-01-101 |
| R-20214 | USA-20200-01-005 | USA-20200-01-101 |
| D-20220, T-20224, T-20221 | USA-20200-01-002 | USA-20200-01-100 |
| FP-20218A, FP-20218B, and FP-20218C | USA-20200-01-006 | USA-20200-01-104 |
| T-20392 | USA-20300-01-11 | USA-20300-01-101 |
| T-20401 | USA-20400-01-001A | USA-20400-01-100 |
| T-20411 | USA-20400-01-001B | USA-20400-01-100 |
| H-20410C and H-20410D | USA-20400-01-001D | USA-20400-01-100 |
| T-20402 | USA-20500-01-001A | USA-20500-01-100 |
| T-20501 | USA-20500-01-001B | USA-20500-01-100 |
| H-20513A | USA-20500-01-001C | USA-20500-01-100 |
| T-20528 | USA-20500-01-001D | USA-20500-01-100 |
| F-20522 and F-20524 | USA-20500-01-002 | USA-20500-01-101 |
| H-20540 and T-20509 | USA-20500-01-004 | USA-20500-01-101 |
| O-20608 | USA-20600-01-001A | USA-20600-01-100 |
| O-20621 | USA-20600-01-002 | USA-20600-01-100 |
| T-20623 | USA-20600-01-003 | USA-20600-01-100 |
| T-20650 | USA-20600-01-004 | USA-20600-01-101 |
| R-23201 | USA-23200-01-001 | USA-23200-01-100 |
| C-23344 | USA-23300-01-002 | USA-23300-01-100 |
| T-90120 | USA-90100-01-001 | USA-90000-01-100 |
| T-90204 and T-90206 | USA-90200-01-001A | USA-90000-01-101B |
| R-90208 and R-90209 | USA-90200-01-001B | USA-90000-01-101B |
| R-90220A, R-90220B, R-90221A, R-90221B, T-90222A, and T-90222B | USA-90200-01-002 | USA-90000-01-102 |
| T-90226, D-90255, T-90235 | USA-90200-01-003 | USA-90000-01-103 |
| T-90240 and T-90241 | USA-90200-01-004 | USA-90000-01-104 |
| F-90250 and T-90260 | USA-90200-01-005 | USA-90000-01-105 |
| R-90401 and T-90402 | USA-90400-01-001B | USA-90000-01-101A |
| T-90405 | USA-90400-01-001A | USA-90400-01-100 |
| T-90411 | USA-90400-01-002 | USA-90400-01-100 |

In broad terms, the types of miscellaneous equipment will be equipped with the following safety elements:

- Tanks, such as day tanks or intermediate holding tanks – 1) Level switch high to assure that the tank will not be overfilled, or redundant continuous level indicators, 2) Continuous level indicator for fill monitoring, and 3) Overflow line to protect the tank from over pressure in case both level switches fail.
- Simple reactors, such as agitators – 1) Level switch high to assure that the vessel will not be overfilled, or redundant continuous level indicators, 2) Continuous level indicator for fill monitoring, and 3) Overflow line to protect the vessel from over pressure in case both level switches fail.
- Complex reactors – 1) Level switch high to assure that the vessel will not be overfilled, or redundant continuous level indicators, 2) Continuous level indicator for fill monitoring, 3) Overflow line to protect the vessel from over pressure in case both level switches fail, other monitoring, as appropriate to each reactor, such as pH or temperature.
- Filter presses – 1) Pressure indicators to control flow of material, 2) automatic shut-off for high pressure
- Heat exchangers, including condensers – Temperature and pressure indicators
- Distillation units – 1) Level switch high to assure that the unit will not be overfilled, or redundant continuous level indicators, 2) Continuous level indicator for fill monitoring, 3) Overflow line to protect the unit from over pressure in case both level switches fail, temperature, and pressure.
- Oven – Multiple temperature indicators, fire eye on burner, lower explosive limit (LEL) monitor, and multiple pressure indicators.
- Dryer – Multiple temperature and pressure indicators

The vessels, such as tanks and reactors, have on-off valves at the bottom of the vessel (to be operated from control room only), connected to a closed piping system.

For vessels capable of handling materials containing volatile organic compounds, closed vent suction is in place to maintain a slight vacuum in the vessels so the organic vapors will not vent to the atmosphere. The suction vents are connected to the thermal oxidizer (or backup carbon adsorption unit) for air pollution control.

Overfill protection consists of an interlock on the pump, which stops the pump and closes the valve in case of a high level in the vessel (according to continuous level indicator or level switch high).

*Ignitable, Reactive, and Incompatible Wastes*

Elcon will manage ignitable and incompatible waste streams; Elcon is not seeking permission to accept reactive waste streams. The system for profiling and accepting each waste stream has been described previously.

Each vessel is equipped with valves that can be opened only from the control room. Interlocks are in place to prevent multiple lines from feeding to the vessel. When choosing a vessel for a specific waste stream, the facility software will only allow the correct valves to open to avoid misdirection of wastes. Reactors will be equipped with temperature indicators that will stop feed into the reactor in case of an uncontrolled reaction as indicated by an abnormal temperature rise.

Elcon will take appropriate precautions to prevent accidental ignition or reaction of ignitable waste. This waste will be separated and protected from sources of ignition or reaction, including but not limited to: open flames, smoking, cutting and welding, hot surfaces, frictional heat, sparks (static, electrical, or mechanical), spontaneous ignition (e.g., from heat-producing chemical reactions), and radiant heat. Elcon will confine smoking and open flames to specially designated locations, away from ignitable waste. "No Smoking" signs will be conspicuously placed wherever there is a hazard from ignitable waste. No smoking will be permitted in any of the waste handling and processing areas.

Elcon will take the following precautions related to ignitable and incompatible waste streams:

1. Through the use of actual data from the operations in Israel – In 12 years of operation at a similar facility in Israel, there have been no incidents. Similar equipment and operating procedures to prevent adverse reactions will be in place at the proposed plant in Falls Township.

2. Details on the tank and vessel system design and operation as provided in this application – such as materials of construction, operating practices, training, and instrumentation and interlock systems.

3. Conformance with the National Fire Protection Association (NFPA) requirements for flammable and combustible liquids, as addressed in various places in this section of the application.

*Description of Equipment Installation and Testing Plans and Procedures*

Installation of the processing equipment will be conducted by a contractor with appropriate credentials and experience for such installations. Elcon anticipates that most of the equipment will be constructed onsite, although some of the equipment will be fabricated offsite and assembled onsite. Specifically regarding tanks that are part of the processing operations, the Engineer of Record for the tank assessments will observe tank system installations and tightness testing. Prior to placing the tank systems into service, an independent, qualified, installation inspector or a qualified Professional Engineer will inspect the system as required by 40 CFR 264.192(b).

Elcon will ensure that proper handling procedures are adhered to in order to prevent damage to the equipment during installation. Prior to covering, enclosing, or placing a new piece of equipment or component in use, an independent, qualified, installation inspector or a qualified Professional Engineer, either of whom is trained and experienced in the proper installation of this equipment, will inspect the system for the presence of any of the following items:

- Weld breaks
- Punctures
- Scrapes of protective coatings
- Cracks
- Corrosion
- Any other structural damage or inadequate construction/installation

All discrepancies will be remedied before the equipment is covered, enclosed, or placed in use.

The tanks and ancillary equipment will be tested for tightness prior to completed and placed in use. Elcon anticipates using hydrostatic testing for the tanks and ancillary equipment. If a tank system is found not to be tight, all repairs necessary to remedy the leak(s) in the system will be completed prior to the tank system being placed into use.

Ancillary equipment will be supported and protected against physical damage and excessive stress due to settlement, vibration, expansion, or contraction. The piping system installation procedures described in ANSI Standard B31.3, "Petroleum Refinery Piping," or ANSI Standard B31.4 "Liquid Petroleum Transportation Piping System," will be used, where applicable, as guidelines for proper installation of piping systems.

*Controls and Practices to Prevent Overflows –*

Vessels, such as process tanks and reactors, will be designed and operated with on-off valves located at the inlet to the tank, a continuous level indicator and high level switch. High level switches will be located below the overflow and will be equipped with an overflow alarm.

Control software will close (interlock) the inlet valve if a high level is reached (according to the level indicator) or if the high level switch alarm is actuated. This will cause the inlet to the tank to close and prevent additional waste from entering the tank.

The interlock systems for the process equipment are provided on the P&IDs in Appendix D-7. Table D-7 above provides a list of the processing equipment and associated P&IDs.

Hazardous wastes or treatment reagents will not be placed in equipment if they could cause the equipment, its ancillary equipment, or the containment system to rupture, leak, corrode, or otherwise fail. Materials of construction and compatibility are discussed in Engineer's Assessment in Appendix D-9. Materials of construction are provided on Table D-6 and on the P&IDs in Appendix D-7.

Elcon will use appropriate controls and practices to prevent spills and overflows from process tanks, process equipment, or containment systems. These include at a minimum:

(1) Spill prevention controls (e.g., check valves, dry disconnect couplings);

(2) Overfill prevention controls (e.g., level sensing devices, high level alarms, automatic feed cutoff, or bypass to a standby tank), which are described above

There are no uncovered storage vessels in the process area, except during filling, cleaning, or inspections; therefore, the potential issues related to sufficient freeboard in uncovered vessels to prevent overtopping by wave or wind action or by precipitation are not applicable.

Elcon will develop and follow a schedule and procedure for inspecting overfill controls on the process equipment. The inspections will be conducted at least once each operating day for data gathered from monitoring and leak detection equipment (e.g., pressure or temperature gauges, monitoring wells) to ensure that the equipment is being operated according to its design.

Any deterioration or malfunction will be remedied. If a leak is confirmed, Elcon will notify the Department within 24 hours. Additionally, if required under 40 CFR 302, Elcon will notify the National Response Center of a release.

At least once each operating day Elcon will inspect:

- The tank systems related to processing operations to detect corrosion or releases of waste.
- The other miscellaneous units (non-tanks) associated with the treatment process to detect corrosion or releases of waste.
- The construction materials and the area immediately surrounding the accessible portion of the miscellaneous units, including the secondary containment systems to detect erosion or signs of releases of hazardous waste (e.g., wet spots, dead vegetation).

Ancillary equipment that is not provided with secondary containment, will be inspected at least once each operating day.

There are no underground tanks containing hazardous waste, so inspections for cathodic protection systems are not applicable.

40 CFR Part 264.603 applies to disposal units, so the post closure requirements of this portion of the rule are not applicable as Elcon is not seeking to install a disposal unit.

D-8b Waste Characteristics

Table D-6 provides the volume of waste that can be stored or treated in each unit and a very broad description of the waste that will be treated or stored. Table D-8 provides additional details on the waste characteristics.

Some of the materials that will be handled as well as the processes themselves have the potential to emit air pollutants. All of the potential sources of air pollution will be controlled by air pollution controls devices that are considered Best Available Technology. All of the emission sources associated with the storage and handling of waste and the associated air pollution control devices will addressed in a detailed application provided to the Department's Air Quality Program after the submission of this application. Additional applicable air requirements under the RCRA program (i.e., 40 CFR Part 264 Parts AA, BB, and CC) are addressed in Sections M, N, and O of this application.

All of the vessels that treat or store materials containing volatile organic compounds (VOCs) will be closed and vented to a high efficiency air pollution system that will be designed to destroy in excess of 99.9% of the organics in the air stream. There are several areas within the treatment building that will handle dusty material. These areas will have localized air pollution control devices to remove the particulate matter from the air stream. Additionally, emissions of acid gases and oxides of nitrogen from the processes will also be controlled by air pollution control devices.

All of the materials are stored and treated within secondary containment systems to prevent a release of the waste constituents into the groundwater, subsurface environment, surface water, wetlands, or to the surface soil. The materials of construction and sealing materials will prevent migration through the soil and containment areas.

Drawings showing the secondary containment details are provided in Appendix D-1 on the following drawings:

- Drawing S102A – Tanks associated with the operations in Area 5
- Drawings S102A through S102D – Four floors and a mezzanine of the operations in Area 5.
- Drawing S107 – Biological Treatment in Area 11, for all vessels, except for four biological treatment reactors
- Drawing S108 – Biological Treatment in Area 11, four biological treatment reactors

**TABLE D-8**
**CONTENTS AND CHARACTERISTICS OF MATERIALS STORED AND TREATED IN MISCELLANEOUS UNITS**

| Equipment IDs | Contents[1] | Characteristics |
|---|---|---|
| R-12201 | Strong acid waste | Liquid; low pH (below 7) |
| R-12213 and T-12215 | Milk of lime | Liquid solution of calcium hydroxide. pH approximately 12 |
| T-12231 | Filtrate water from strong acid waste processing | Liquid; pH approximately neutral |
| FP-12240 | Strong acid waste | Liquid; pH approximately neutral; solids removed |
| F-12243 | Gypsum, flocculent, strong acidic waste from R-12201 | Neutralized liquid waste, centrifuged characteristics of individual components (centrifuge operation) |
| T-12270 | Storage vessel for process water, includes city water | Filtered, neutralized process wastewater from acid treatment process and city water |
| R-12267 | Wastewater, sodium carbonate, flocculent | Filtered, neutralized process wastewater from acid treatment process; flocculent and associated settled solids |
| T-12263 | Water | Filtered, neutralized process wastewater from acid treatment process and city water |
| T-12264 | Water | Filtered, neutralized process wastewater from acid treatment process |
| R-20206, R-20210, R-20214 | Sludge | An analysis of the sludge generated during the treatment process is included in Section C of this application in Appendix C-2. |
| D-20220, T-20224, T-20221 | Clarifying tanks, filtered sludge from filter presses | An analysis of the sludge generated during the treatment process is included in Section C of this application in Appendix C-2. |
| FP-20218A, FP-20218B, and FP-20218C | Filtered sludge | An analysis of the sludge generated during the treatment process is included in Section C of this application in Appendix C-2. |
| T-20401 | Treated wastewater | Filtered, neutralized process wastewater from acid treatment process |
| T-20411 | Flash chamber, brine (20%), treated wastewater | Filtered, neutralized process wastewater from acid treatment process |
| H-20410C and H-20410D | Brine (20%), sulfuric acid, sodium hydroxide | An analysis of the brine generated during the treatment process is included in Section C of this application in Appendix C-2. |
| T-20402 | Brine | An analysis of the brine generated during the treatment process is included in Section C of this application in Appendix C-2. |

**TABLE D-8**
**CONTENTS AND CHARACTERISTICS OF MATERIALS STORED AND TREATED IN MISCELLANEOUS UNITS**

| Equipment IDs | Contents[1] | Characteristics |
|---|---|---|
| H-20513A | Brine (~60%) | An analysis of the brine generated during the treatment process is included in Section C of this application in Appendix C-2. |
| T-20528 | Crystallizer condensate | An analysis of the brine generated during the treatment process is included in Section C of this application in Appendix C-2. |
| F-20522 and F-20524 | Brine, TS = 60% | Brine containing solids. An analysis of the brine generated during the treatment process is included in Section C of this application in Appendix C-2. |
| H-20540 and T-20509 | Brine (60%) | Brine containing solids. An analysis of the brine generated during the treatment process is included in Section C of this application in Appendix C-2. |
| O-20608 | Sludge | An analysis of the sludge generated during the treatment process is included in Section C of this application in Appendix C-2. |
| O-20621 | Sludge, 30% (from rotary dryer O-20608) | An analysis of the sludge generated during the treatment process is included in Section C of this application in Appendix C-2. |
| T-20623 | Sludge | An analysis of the sludge generated during the treatment process is included in Section C of this application in Appendix C-2. |
| T-20650 | Sludge | An analysis of the sludge generated during the treatment process is included in Section C of this application in Appendix C-2. |
| R-23201 | Wastewater with 10-50% organics. Flocculants and anti-foam added. | A breakdown of typical organics is included in Section C of this application on Table C-1. |
| C-23344 | Filtered organic wastewater (10-100%), lean/rich distillate | A breakdown of typical organics is included in Section C of this application on Table C-1. |
| T-23341 | Filtrated organic wastewater (10%-100%) | A breakdown of typical organics is included in Section C of this application on Table C-1. |
| T-90120 | Effluent waste tank, effluent wastewater (acid and alkaline) | Water with trace organics. |
| T-90204 and T-90206 | Balancing tanks, effluent wastewater | Water with trace organics. |
| R-90208 and R-90209 | Conditioning tank/anaerobic reactor, effluent wastewater | Water with trace organics. |

**TABLE D-8**
**CONTENTS AND CHARACTERISTICS OF MATERIALS STORED AND TREATED IN MISCELLANEOUS UNITS**

| Equipment IDs | Equipment IDs | Equipment IDs |
|---|---|---|
| R-90220A, R-90220B, R-90221A, R-90221B, T-90222A, and T-90222B | Aerobic pools, effluent wastewater | Water with trace organics. |
| T-90226, D-90225, T-90235 | Effluent wastewater, includes city water | Filtered, neutralized process wastewater from acid treatment process and city water |
| T-90240 and T-90241 | Treated wastewater, includes city water | Filtered, neutralized process wastewater from acid treatment process and city water |
| F-90250 and T-90260 | RO water | Filtered, neutralized process wastewater from acid treatment process |
| T-90405 | Effluent wastewater feed to MVR process | Water containing brine. An analysis of the brine generated during the treatment process is included in Section C of this application in Appendix C-2. |
| R-90401 and T-90402 | Effluent wastewater | Water containing brine. An analysis of the brine generated during the treatment process is included in Section C of this application in Appendix C-2. |
| T-90411 | Flash chamber, brine (20%), treated wastewater | Water containing brine. An analysis of the brine generated during the treatment process is included in Section C of this application in Appendix C-2. |

[1] Not all of content materials are wastes, e.g., sodium carbonate, gypsum

Calculations for the individual secondary containment areas are provided in Appendix D-5 and are summarized on Table D-9.

**TABLE D-9**
**SUMMARY OF PROCESS EQUIPMENT SECONDARY CONTAINMENT VOLUMES**

| Containment Area and Dike | Capacity of Largest Vessel ($ft^3$) | Precipitation Volume ($ft^3$) | Total Containment Volume Needed ($ft^3$) | Total Containment Volume Available[1] ($ft^3$) |
|---|---|---|---|---|
| Area 5 – Feed tanks dike | 4,278 | 1,141 | 5,419 | 7,601 |
| Area 5 – Caustic day tanks dike | 67 | 108 | 175 | 761 |
| Area 5 – Acid day tank dike | 67 | 108 | 175 | 710 |
| Area 5 – Acid waste treatment area | 1,738 | 749 | 2,487 | 4,651 |
| Area 5 – Treatment Building | 1,754 | NA (indoors)[3] | 8,439 | 9,438 |
| Area 11 – Biological processing area, except 4 reactors | 14,706 | 4,321 | 19,027 | 25,765 |
| Area 11 – Biological processing area, four reactors[2] | 14,706 | 2,348 | 17,054 | 21,390 |

[1] Available volumes are conservative and do not include volumes from sumps and trenches.
[2] R-90220A, R-90220B, R-90221A, and R-90221B.
[3] Allowance for sprinkler system is 6,684 $ft^3$.

Secondary containment will be in place before the tanks or processing systems and components are placed into service. The secondary containment systems will be designed, installed, and operated to prevent any migration of wastes or accumulated liquid out of the system to the soil, groundwater, or surface water at any time during the use of the tank or processing systems. The containment system will also be capable of detecting and collecting releases and accumulated liquids until the collected material is removed.

All of the equipment will be new and will comply with the secondary containment requirements prior to start-up.

Drawings S102A, S107, and S108, provide details on the design of the tank and equipment containment systems, including foundations.

The basic secondary containment system is reinforced concrete and is similar for all of the miscellaneous units.

The containment areas will be designed and constructed of reinforced concrete and will be sealed and coated with suitable materials (impervious and compatible with the wastes) to provide containment. Appendix D-4 provides additional information on the coating materials. The containment areas will be sloped to individual sumps for each separate area. Each containment area will be equipped with a sump pump that will pump the accumulated water (i.e., precipitation, as applicable) or waste in the containment area to the appropriate storage tank for subsequent treatment in the processing plant. Drawings S102A, S107, S108 in Appendix D-1 provide details on containment areas associated with the process operations. These drawings, along with S110, also include cross-sectional diagrams of the containment areas and additional details on the sumps, joint, and wall designs.

The process equipment and tank systems within the containment areas will be installed in a manner that allows leaks or releases from the bottoms of the tanks to be readily detected. For the vessels in the outdoor storage areas of Areas 5 and 11, each vessel is on an elevated and visible concrete pad within its containment area. This pad for each of the tanks or vessels is depicted on Drawings S102A, S107, and S108 in Appendix D-1. The equipment within the Treatment Building is visible for inspection.

The containment areas have been designed to have sufficient strength and thickness to prevent failure owing to pressure gradients (including static head and external hydrological forces), loads, load combinations required by the Building Code, physical contact with the waste to which it is exposed, climatic conditions, and the stress of daily operation (including stresses from nearby vehicular traffic). The containment areas are on a foundation capable of providing support to the secondary containment system, resistance to pressure gradients above and below the system, and capable of preventing failure due to settlement, compression, or uplift. Structural calculations are provided in Appendix D-11.

The containment area, including the sumps, will be inspected at least once per day to determine if any spills have occurred within the secondary containment area. The sumps will be equipped with level indicators that will pump out the sumps. This operational control meets the federal definition of a leak detection system.

The secondary containment areas are each sloped to drain and remove liquids resulting from leaks, spills, or precipitation (if applicable). Spilled or leaked waste and any accumulated precipitation will be removed from the secondary containment system within 24 hours using the pump and sump system.

The liquid collected in the secondary containment sump system, including any precipitation, will be presumed to be a hazardous waste and will be managed and treated in the facility's hazardous waste treatment system. No liquids collected in the secondary containment system will be discharged to waters of the United States or a POTW.

Elcon's secondary containment system for the process areas consists of a concrete barrier, with an appropriate sealant, that is external to the tanks or process equipment and is beneath and on the sides of tanks or process equipment which restricts the downward or lateral escape of

hazardous waste to the environment. The containment areas meet the intent of the definition of "liner" under 40 CFR 260.10 and are considered external liner systems.

*Regarding the Secondary Containment Systems for Miscellaneous Units –*

The containment systems (i.e., external liner systems) are:

1. Designed and will be operated to contain 100 percent of the capacity of the largest tank or piece of process equipment within its boundary
2. Designed and will be operated to prevent run-on or infiltration of precipitation into the secondary containment system. The capacity of each outdoor containment area is sufficient to contain precipitation from a 25-year, 24-hour rainfall event.
3. Free of cracks or gaps
4. Designed and will be installed to surround the tank or process equipment completely and to cover all surrounding earth likely to come into contact with the waste if the waste is released from the storage tank or process equipment (i.e., capable of preventing lateral as well as vertical migration of the waste).

The walls surrounding the containment areas will prevent run-on. The doorways within the Treatment Building are graded such that the flow of liquids will be away from the openings. Additionally, the graded elevation of the containment area in concert with the barrier wall will keep the process tanks and process equipment outside of the 500-year flood plain.

Materials of construction and routine inspections will be used to maintain the secondary containment areas free of cracks and gaps.

Drawings S102A through S102D, S107, and S108 in Appendix D-1 demonstrate how the secondary containment area will completely cover the surrounding area. Spills on the upper levels of the Process Building will be collected by local drains and directed to the containment area on the ground floor. Additional localized spill mitigation will be provide by the retaining wall system; see Drawings C101 and C102A in Appendix B-1 of Section B. Drawing S111 in Appendix D-1 provides additional structural details on the barrier wall.

Ancillary equipment associated with the process equipment will be provided with secondary containment (e.g., trench, jacketing, double-walled piping) that meets the requirements of 40 CFR 264.193(b) and (c) except for:

- Welded flanges, welded joints, and welded connections, that are visually inspected for leaks on a daily basis;
- Sealless or magnetic coupled pumps and sealless valves, that are visually inspected for leaks on a daily basis; and
- Pressurized aboveground piping systems with automatic shut-off devices (e.g., excess flow check valves, flow metering shutdown devices, loss of pressure actuated shut-off devices) that are visually inspected for leaks on a daily basis.

D-8c Treatment Effectiveness

Since the facility has not yet been constructed, laboratory and field data do not exist for this proposed facility. However, there is data available from an operating facility in Haifa, Israel. Based on this operation, Elcon anticipates that greater than 99.9% of the contaminants in the incoming waste stream will be removed from the liquid waste stream and that caustic or acid waste streams will be neutralized. Available data from the Israel facility is summarized on Table D-10. Additional supporting data from the Israeli facility, such as actual monitoring data of the effluent and emission testing data, are provided Section C of this application.

D-8d Environmental Performance Standards for Miscellaneous Units

Information on the potential pathways of exposure of humans or environmental receptors to hazardous waste or hazardous constituents and on the potential magnitude and nature of such exposures from Elcon's proposed operations are addressed in this section.

The information provided below demonstrates that Elcon's proposed operations will not violate the environmental performance standards of 40 CFR §264.601; therefore, available hydrologic, geologic, and meteorologic assessments from previous assessments are provided. Additionally, extensive environmental studies have been conducted in the area of the proposed operations since the site is within U.S. Steel and Keystone Industrial Port Complex (KIPC) property.

Potential pathways of exposure of humans or environmental receptors to hazardous waste or hazardous constituents and on the potential magnitude and nature of such exposures are addressed in the sub-sections below. In general, the potential pathways for exposure are summarized on Table D-11.

*D-8d(1) Protection of Groundwater and Subsurface Environment*

Prevention of any releases that may have adverse effects on human health or the environment due to migration of waste constituents in the groundwater or subsurface environment are addressed in this sub-section. There will be no routine releases to the groundwater and subsurface environment. Any releases to this media would be the result of a failure of multiple systems designed to prevent this type of release.

Many of the items in this sub-section are addressed in a document prepared by Langan Engineering & Environmental Services for U.S. Steel Real Estate Group, dated August 4, 2010, entitled: Remedial Investigation/Final Act 2 Report, Site-wide Groundwater, Former U.S. Steel Fairless Works, Keystone Industrial Port Complex, Fairless Hills, Pennsylvania. For simplicity, this report will be referred to as the Final Act 2 Report for U.S. Steel in this application. Relevant portions of this document are provided in Appendix D-12, with references to specific page or section numbers, as indicated in the discussions that follow.

## TABLE D-10
## SUMMARY OF AVAILABLE DATA FOR EFFECTIVENESS OF TECHNOLOGY

| Subject/Parameter | Units | Average Raw Waste Data | Intermediate Process Data | | Intermediate Efficiency (%) | Control Device Efficiency (%) | Overall Efficiency (%) |
|---|---|---|---|---|---|---|---|
| Total Organic Carbon (TOC) | mg/L | 60,000 | | 253 | 99.58 | 99.90 | >99.99 |
| Total Solids (TSS+TDS) | mg/L | 50,000 | | 454 | 99.09 | 98.00 | 99.98 |
| Oils and Fats | mg/L | 5,000 | < | 10 | 99.80 | 99.00 | 100.00 |
| Mineral Oil | mg/L | 500 | < | 10 | 98.00 | 99.00 | 99.98 |
| pH | | 0.1-14 | | Neutral | N/A | N/A | N/A |
| Chlorides | mg/L | 10,000 | | 41 | 99.59 | 98.00 | 99.99 |
| Potassium | mg/L | 690 | | 23.9 | 96.54 | 99.00 | 99.97 |
| Fluoride | mg/L | 900 | | ND | ND | ND | ND |
| Boron | mg/L | 300 | < | 0.2 | 99.93 | 99.00 | >99.99 |
| Sulfates | mg/L | 10,000 | | 107 | 98.93 | 98.00 | 99.98 |
| Sulfides | mg/L | 450 | | 10 | 97.78 | 98.00 | 99.96 |
| Metals Screening - ICP: | | | | | | | |
| Arsenic | mg/L | 150 | < | 0.025 | 99.98 | 99.00 | >99.99 |
| Zinc | mg/L | 12,000 | | 0.04 | 100.00 | 99.00 | >99.99 |
| Tin | mg/L | 4,000 | < | 0.025 | 100.00 | 99.00 | >99.99 |
| Aluminum | mg/L | 5,000 | < | 1 | 99.98 | 99.00 | >99.99 |
| Free Chlorine | mg/L | ND | | ND | ND | ND | ND |
| Silver | mg/L | ND | < | 0.025 | ND | ND | ND |
| Mercury | mg/L | 120 | < | 0.025 | 99.98 | 99.00 | >99.99 |
| Chromium 3 | mg/L | 180 | < | 0.025 | 99.99 | 99.00 | >99.99 |
| Chromium 6 | mg/L | 450 | < | 0.025 | 99.99 | 99.00 | >99.99 |
| Copper | mg/L | 650 | | 0.03 | 100.00 | 99.00 | >99.99 |
| Nickel | mg/L | 210 | < | 0.025 | 99.99 | 99.00 | >99.99 |
| Molybdenum | mg/L | 400 | | 0.025 | 99.99 | 99.00 | >99.99 |
| Manganese | mg/L | 390 | < | 0.025 | 99.99 | 99.00 | >99.99 |
| Lead | mg/L | 900 | < | 0.025 | 100.00 | 99.00 | >99.99 |
| Cadmium | mg/L | 340 | < | 0.025 | 99.99 | 99.00 | >99.99 |
| Cobalt | mg/L | 420 | < | 0.025 | 99.99 | 99.00 | >99.99 |
| Cyanide | mg/L | ND | | ND | ND | ND | ND |

Notes:

1. Data is an average reflecting multiple types of waste streams treated at the existing facility.
2. For concentrations reported as less than (<), the value shown was used in the calculation.
3. ND = not detected

## TABLE D-11
## POTENTIAL PATHWAYS OF EXPOSURE

| Environmental Media | Cause for Exposure | Route of Exposure | Likelihood of Occurrence[1] |
|---|---|---|---|
| Groundwater | Normal Operations: None; no planned releases to groundwater | NA | NA |
| | Catastrophic Event: Spill at facility and failure of interlock systems and secondary containment systems | NA[2] | $6 \times 10^{-8}$ |
| Subsurface environment | Normal Operations: None; no planned releases to subsurface environment | NA | NA |
| | Catastrophic Event: Spill at facility and failure of interlock systems and secondary containment systems | NA[2] | $6 \times 10^{-8}$ |
| Surface water | Normal Operations: None; no planned releases to surface water | NA | NA |
| | Catastrophic Event: Catastrophic failure of truck and containment equipment; or surface spill eventually reaching surface water through aquifer | If unmitigated: ingestion, contact, inhalation | $6 \times 10^{-8}$ |
| Wetlands | Normal Operations: None; no planned releases to wetlands | NA | NA |
| | Catastrophic Event: Spill at facility and failure of interlock systems, secondary and barrier wall systems, and infiltration basin. | If unmitigated: contact, inhalation | $6 \times 10^{-8}$ |
| Soil surface | Normal Operations: None; no planned releases to soil surfaces | NA | NA |
| | Catastrophic Event: Spill at facility and failure of interlock systems and secondary and barrier wall systems | If unmitigated: ingestion, contact, inhalation | $6 \times 10^{-8}$ |
| Air | Normal Operations: Emissions as permitted under the Clean Air Act and Air Quality Permit | Inhalation | Routine releases below federal and state requirements |
| | Catastrophic Event: Failure or malfunction of air pollution control system and interlock shutdown system | Inhalation | --[3] |

[1] Section A-12 (Appendix A-9) of this application provides details on this calculation, except for air.
[2] Groundwater in the areas is a non-use aquifer. An unmitigated spill could eventually reach the surface water and is addressed under the discussion of surface water.
[3] A catastrophic failure of the air pollution control system has never occurred in in more than 10 years of operation in Israel. Based on failure rates in *Guidelines for Process Equipment Reliability Data* (American Institute for Chemical Engineers, 1989), the series of events that would need to occur (failure of control device component and failure of the automatic shutdown system) for an unplanned release is approximately once every 1,000 years.

The Final Act 2 Report for U.S. Steel addresses the former U.S. Steel property, which includes Elcon's small portion of property (approximately 33 acres) within the confines of the full U.S. Steel site (approximately 3,900 acres). This satisfies the instances within the RCRA rule or the Department's checklist that request information on the property (Elcon), and the surrounding area, in this case, the full 3,900 acre former U.S. Steel property.

*Regarding 40 CFR 264.601(a)(1) The volume and physical and chemical characteristics of the waste in the unit, including its potential for migration through soil, liners, or other containing structures* – This information is addressed above under Section D-8b for volume and chemical characteristics. In order for the waste to migrate to the soil, there would need to be a failure of the tank or vessel itself as well as the secondary containment structure. All secondary structures are constructed of reinforced concrete. Uncoated concrete has a permeability of $1x10^{-13}$ meter/second, protecting the soil even if a leak from the tank was undetected. If a coating failure occurred at a construction joint, the chemical-resistant waterstop in the joint will also prevent fluid migration through the joint.

*Regarding 40 CFR 264.601(a)(2) The hydrologic and geologic characteristics of the unit and the surrounding area* – Elcon's operations will not include land based operations, such as a landfill or a land treatment operation. Therefore, there are no hydrologic or geologic characteristics of the treatment or storage units. Hydrologic and geologic information of the surrounding area are addressed in Appendix D-12 beginning in Section 3.0 on the bottom of Page 6 of the Final Act 2 Report for U.S. Steel. The aquifer has been designated as a non-use aquifer since 1999. Supporting documentation related to the non-use determination is provided in Appendix D-12 of this application in Appendix C of the Final Act 2 Report for U.S. Steel.

*Regarding 40 CFR 264.601(a)(3) The existing quality of groundwater, including other sources of contamination and their cumulative impact on the groundwater* – The proposed containment system, Elcon's operating practices, and instrumentation (e.g., overfill protection) will prevent impacts from Elcon's operations to the existing groundwater; therefore, there will be no further degradation to the non-use aquifer as a result of Elcon's operations.

There have been extensive studies of the groundwater below the former U.S. Steel facility. Attachment D-12, Section 4.0 of the Final Act 2 Report for U.S. Steel provides a description of historical groundwater monitoring. Section 7.0 of the Final Act 2 Report for U.S. Steel describes the additional sampling that was completed related to the Act 2 remedial investigation; the sampling results are provided in Appendix D of the Final Act 2 Report for U.S. Steel. Based on a communication with EPA Region III personnel, this is the most recent site-wide information available.

*Regarding 40 CFR 264.601(a)(4) The quantity and direction of groundwater flow* – A map showing groundwater flow in the area is provided in Appendix D-12 of this application on Figure 4 in the Figures section of the Final Act 2 Report for U.S. Steel. Section 3.2 of the Final Act 2 Report for U.S. Steel describes the general hydrogeology of the area; this is also provided

in Appendix D-12 of this application. The general direction of flow is towards the Delaware River, or east.

Regarding the quantity of groundwater flow, the volumetric groundwater flow rate, Q, is the product of the hydraulic conductivity, K, the hydraulic gradient, i, and cross sectional area of saturated water table aquifer discharging beneath the site, A:

$$Q = KiA$$

Determination of hydraulic conductivity, K: The BCM Engineers, Inc. "*Phase I RCRA Facility Investigation Final Report*," dated September 19, 1997, reviewed hydrogeological testing results from two previous environmental studies at Fairless works, carried out by Chester Engineers (1981) and Goldwater Associates (1988). The study by Chester Engineers included constant rate pumping tests for approximately one hour on 14 wells screened in the shallow water table aquifer. Hydraulic conductivities ranged from 0.6 to 370 feet/day with a geometric mean of 7.2 feet/day. The study by Goldwater Associates included performing slug tests on eight, shallow water table wells. Hydraulic conductivities were between 0.057 and 82 feet/day, with a geometric mean of 2.1 feet/day. BCM Engineers conducted slug testing in the water table aquifer on six wells, which had hydraulic conductivity values between 2.4 and 93.2 feet/day. The relevant portions of the BCM Engineer's report are provided in Appendix D-13.

Determination of hydraulic gradient, i: The steepest hydraulic gradient (0.0009) observed from the potentiometric map in Figure 4 of the Final Act 2 Report for U.S. Steel (see Appendix D-12) was used in the groundwater flow rate calculation. These data were used since they include the most recent groundwater measurements. The data agree with the potentiometric maps of the subject property from 2000 and 1996 (both approximately 0.0009).

Determination of cross-sectional area, A: The cross-sectional area of the saturated water table aquifer beneath the site is estimated to have the dimension of 25 feet based on the maximum saturated thickness based on geologic cross-section A-A' from the May 26, 2006, Report of Geotechnical Study by Gilmore and Associates, Inc., and a width of 800 feet (approximate width of facility measured from site map). This results in a cross-sectional area, A, of 20,000 square feet. The Gilmore report is included in Section A of this application in Appendix A-5, Attachment 2-1.

Based on the above values, the volumetric ground water flow rate was calculated and the results are summarized on Table D-12. Since there is a range in values for hydraulic conductivity, groundwater flow was calculated for each value.

**TABLE D-12**

**GROUNDWATER PROPERTIES FOR KIPC SITE**

| Hydrologic Property | Min | Median | Max |
|---|---|---|---|
| K – Hydraulic Conductivity (ft/day) | 0.57 | 39.45 | 370.00 |
| Q – Discharge (gal/day) | 77 | 5,312 | 49,817 |

*Regarding 40 CFR 264.601(a)(5) The proximity to and withdrawal rates of current and potential groundwater users* – Elcon will not withdraw groundwater for use at its facility. The underlying aquifer is a non-use aquifer, so there are no current or potential groundwater users of the underlying aquifer. The non-use aquifer letter and supporting documents are provided in Appendix C of the Final Act 2 Report for U.S. Steel, which is provided in Appendix D-12 of this application.

*Regarding 40 CFR 264.601(a)(6) The patterns of land use in the region* – Figure B-3 in Section B of this application shows the land use in the area. Figure B-4, also in Section B of this application shows the Falls Township zoning map. The site itself as well as much of the nearby land is classified as either "developed, medium density" or "developed, high density."

*Regarding 40 CFR 264.601(a)(7) The potential for deposition or migration of waste constituents into subsurface physical structures, and into the root zone of food-chain crops and other vegetation* – There are no planned releases from Elcon's operations into the subsurface. The proposed containment system, Elcon's operating practices, and instrumentation (e.g., overfill protection) will prevent impacts from Elcon's operations to any subsurface physical structures and into the root zone of food-chain crops, even in the unlikely event of a systemic failure. Additional information on the likelihood of a release to the subsurface is discussed below as well as in Section A-12 of this application.

As provided previously with the Part A Siting application, there are no Agricultural Security Areas within KIPC, or in Falls Township. This information is provided in Appendix D-14 of this application as well.

*Regarding 40 CFR 264.601(a)(8) The potential for health risks caused by human exposure to waste constituents* – There are no planned releases from Elcon's operations into the groundwater or subsurface environment. Section A-12 of this application provides information on the likelihood of a spill reaching the subsurface environment and the impacts to the area.

*Regarding 40 CFR 264.601(a)(9) The potential for damage to domestic animals, wildlife, crops, vegetation, and physical structures caused by exposure to waste constituents* – There are no planned releases from Elcon's operations into the groundwater or subsurface environment. Section A-12 of this application provides information on the likelihood of a spill reaching the subsurface environment and the impacts to the area.

*Regarding Item D-8d(1)(a), Environmental Assessment, on the Department's Checklist* – A release from Elcon's operations will not occur during routine operations; Elcon is not seeking permission to discharge any waste to the groundwater or subsurface environment. For a release to the groundwater or subsurface environment, a series of unlikely events and failures would all need to occur. Table D-13 identifies this series of events and the preventive measures that would need to malfunction for each step to occur.

**TABLE D-13**
**SERIES OF HYPOTHETICAL EVENTS LEADING TO A POTENTIAL RELEASE TO THE GROUNDWATER OR SUBSURFACE ENVIRONMENT**

| Step | Event | Failures that Would Need to Occur | Result of Failed Step |
|---|---|---|---|
| 1 | Spill of tank | Failure of overfill protection system or<br>Catastrophic failure of tank due to condition not identified during daily inspection or periodic third party inspection | Release of contents of a tank to the secondary containment area |
| 2 | Spill from secondary containment system | Catastrophic failure of containment system due to condition not identified during routine inspection and<br>Failure of Elcon's on-site response team to react to incident | Release of spilled materials to paved area inside Elcon's facility |
| 3 | Release beyond barrier wall system | Spill by-passing barrier wall and<br>Failure of Elcon's on-site response team to react to incident | Release of tank contents to on-site infiltration basin |
| 4 | Release from infiltration basin | Spill by-passing infiltration shut-off due to human error (open gate) and<br>Failure of Elcon's on-site response team to react to react and/or<br>Seepage of spilled material out of infiltration basin | Release of material into subsurface environment |

Section A-12 of this application discusses the probability of the above occurring. Also provided in Section A-12 of this application are the impacts of a spill to the subsurface environment, ultimately reaching the Delaware River, using the Department's fate and transport model. This model typically produces conservative (i.e., high or worst-case) results. The results of this analysis show that if Elcon did nothing to clean-up or mitigate the impacts of the spill of a full tank of material, there would be no impacts water intake systems on the Delaware River.

*Regarding Item D-8d(1)(b), Performance Standards, on the Department's Checklist* – Normal operations at Elcon will not impact groundwater or the subsurface environment. To prevent an incident and possible release to the groundwater or subsurface environment from the process

tanks and equipment, Elcon proposes the following performance standards for the process tanks and equipment:

1. Process tanks and equipment will be located within appropriately designed secondary containment areas.
2. Employees handling waste materials will be trained in accordance with the procedures outlined in Section H of this application, including procedures for addressing malfunctions and emergencies.
3. Interlock systems will be used, as detailed on the P&IDs in Appendix D-7, to prevent overfilling of vessels and operating during under potential un-safe conditions.
4. Monitoring equipment used to prevent spills and operating under un-safe conditions will be tested or calibrated in accordance with the manufacturers' recommendations and at the frequency recommended by the manufacturer.
5. In-service process tanks and equipment, secondary containment structures, and monitoring equipment will be inspected at least once per day following the inspection requirements identified in Section F of this application.
6. In-service inspections of the process tanks will be conducted by a certified tank inspector as discussed in Section F.

*D-8d(2) Protection of Surface Water, Wetlands, and Soil Surfaces*

Prevention of any releases that may have adverse effects on human health or the environment due to migration of waste constituents in surface water, wetlands, or the soil surface are addressed in this sub-section.

This subsection also references the Final Act 2 Report for U.S. Steel. Relevant portions of this document are provided in Appendix D-12, with references to specific page or section numbers, as indicated in the discussions below.

*Regarding 40 CFR 264.601(b)(1) The volume and physical and chemical characteristics of the waste in the unit* – This information is addressed above under Section D-8b.

*Regarding 40 CFR 264.601(b)(2) The effectiveness and reliability of containing, confining, and collecting systems and structures in preventing migration* – All of the miscellaneous units will be located within secondary containment systems. The secondary containment systems have been designed to comply with federal and state requirements related to secondary containment structures. Details on the secondary containment structures are provided in earlier portions of this section.

In addition to the regulatory required secondary containment system, a barrier wall will provide localized spill control to assist with minimizing the impacts in the unlikely release of material from the secondary containment areas. A description of the barrier wall system is provided in Section D-12 of this application.

Elcon will maintain the containment structures in accordance with its ongoing preventive maintenance program, which will include daily (minimum) inspections of the containment system effectiveness and reliability of the containment structures, as part of the overall evaluation of risk, is provided in Section A-12 of this application.

*Regarding 40 CFR 264.601(b)(3) The hydrological characteristics of the unit and the surrounding areas, including the topography of the land around the unit* – Elcon's treatment technology is not a landfill or land treatment unit, so there are no hydrological characteristics of the unit itself.

The proposed facility is located in the alluvial plain of the Delaware River inside a change in the river channel direction from southeast to southwest.

Hydrologic information about the area is provided in the Section 2.4 of the Act 2 Final Report for 32-Acre Parcel. Relevant portions of this document are provided in Appendix D-15 of this application.

There are delineated wetlands onsite. Appendix D-16 of this application provides a copy of the wetlands survey report; this report was also provided with the Phase I Siting Application. This report provides a description and locations of the wetlands onsite. All of Elcon's operations are outside of the designated wetlands areas.

The topography of the site and the surrounding area is provided in the following locations:

- Figure B-1 in Section B of this application provides a USGS topographic map of the area
- Drawing C101 in Appendix B-1 of Section B of this application provides a site specific contour map of the area (prior to regrading)
- Preliminary Grading Plan prepared by Gilmore & Associates in Section A, Appendix A-5, Attachment 16L-3 of this application provides a preliminary grading plan of the site for Elcon's operations.

Descriptive information on the physiography and topography is provided in Section 2.3 of the Act 2 Final Report for 32-Acre Parcel. Relevant portions of this document are provided in Appendix D-15 of this application.

*Regarding 40 CFR 264.601(b)(4) The patterns of precipitation in the area* – Bucks County is part of Climate Division PA-3 (Southeast Piedmont) as classified by the National Oceanic & Atmospheric Administration (NOAA). Appendix D-17 of this application provides a map of Pennsylvania showing the counties that are part of the Climate Division. Also included in Appendix D-17 of this application is a summary of climatic data from NOAA from 1971 to 2000 (Climatography of the United States No. 20 1971-2000) for this climate division. Page 042-B of this NOAA document provides monthly and annual precipitation data (means/medians) and extremes; mean number of days of precipitation, by amounts; and probabilities of precipitation,

by amounts. Snow fall data is provided on Page 042C of the NOAA document. The annual mean precipitation for the area is 42 inches.

Appendix D-17 also provides annual precipitation patterns from 1899 to mid-2016 compiled by the Pennsylvania State Climatologist for Pennsylvania Climate Division PA-3. This data includes: average precipitation, average snowfall (yearly and seasonal), mean precipitation and departure from mean, and mean snowfall and departure from mean.

*Regarding 40 CFR 264.601(b)(5) The quantity, quality, and direction of groundwater flow* – The underlying aquifer is a non-use aquifer, so there are no current or potential groundwater users of the underlying aquifer. Elcon will not use or discharge water to the groundwater.

The quantity and direction of groundwater is addressed under Sub-section D-8(d)(1) above.

Quality of the groundwater is based on extensive sampling in the underlying aquifer conducted by U.S. Steel. Based on a discussion with the EPA, the most recent sampling was conducted in October 2008 and June 2009. The results are summarized in the Final Act 2 Report for U.S. Steel on Tables 5 and 6 for the October 2008 and June 2009 results, respectively, found in Appendix D-12 of this application. Locations of the monitoring wells and locations of wells that showed exceedances of the Pennsylvania non-residential non-use aquifer groundwater medium specific criteria (MSCs) are provided on Figure 5 of the Final Act 2 Report for U.S. Steel found in Appendix D-12 of this application.

*Regarding 40 CFR 264.601(b)(6) The proximity of the unit to surface waters* – Figure D-3 shows the proposed Elcon property relative to nearby surface waters. As shown on the figure, the hazardous waste handling and storage operations are located the following approximate distances from surface water bodies:

- Delaware River – approximately 6,215 feet from eastern edge of Elcon's property to closest bank of the Delaware River
- Biles Creek – approximately 2,025 feet from eastern edge of Elcon's property to closest bank of Biles Creek
- Van Sciver Lake – approximately 4,700 feet from western edge of Elcon's property to closest bank of the Van Sciver Lake
- On-site wetlands – approximately 147 feet from the western edge of Elcon's designated area for processing hazardous waste.
- Stormwater run-off conveyance – approximately 440 feet. This is one of several stormwater run-off conveyance systems located within KIPC. The distance shown is to the stormwater run-off system closest to Elcon's property and serves as the run-off management system for multiple industrial facilities within KIPC.

SOURCE:
GOOGLE MAPS

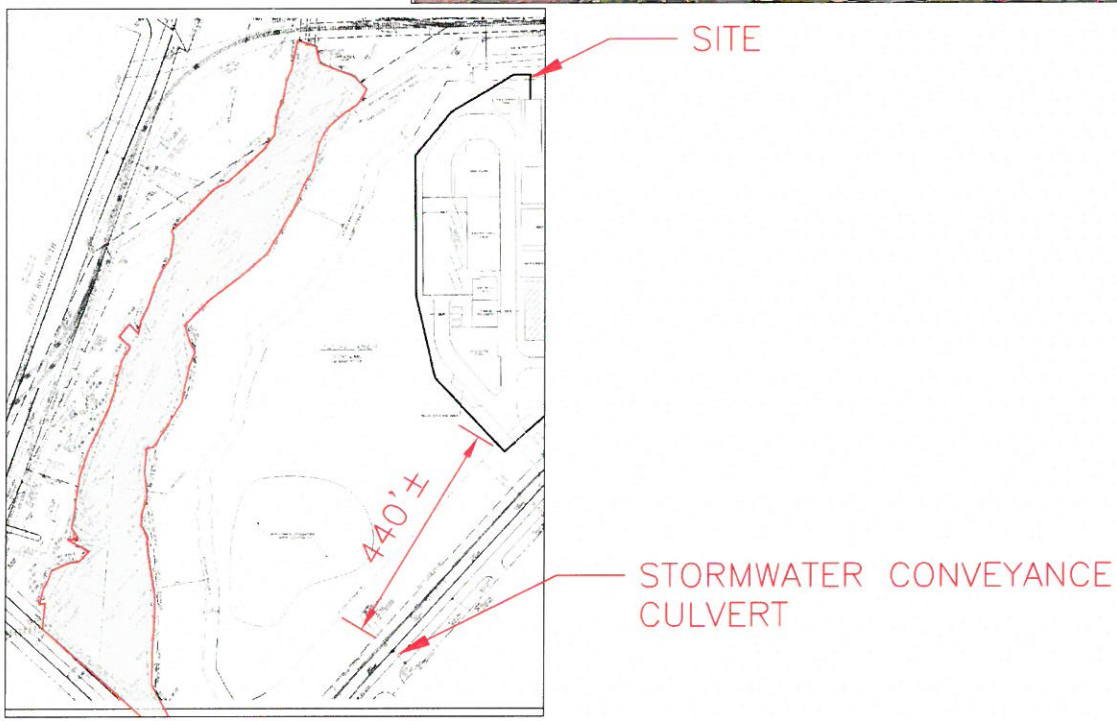


ENGINEERS

Date: 09/08/15

File: EV161065.01

Figure D-3

ELCON RECYCLING SERVICES, LLC
100 DEAN SIEVERS PLACE
MORRISVILLE, PA 19067

SITE PROXIMITY TO SURFACE
WATERS & WETLANDS

*Regarding 40 CFR 264.601(b)(7) The current and potential uses of nearby surface waters and any water quality standards established for those surface waters* – The Delaware River Basin Commission (DRBC) publishes an assessment of the Delaware River and Bay on even years. The most recent assessment was published in 2016. This document addresses uses of the Delaware River and water quality standards.

The uses and water quality standards for the Delaware River are dependent on location, due to the large variability of ecosystems included in the Delaware River Basin. Elcon's property is located in DRBC's Water Quality Management Zone 2. Zone 2 includes River Mile 108.4 to 133.4 and is part of the tidally influenced portion of the river. The tidally influenced portion of the Delaware River ends to the south of Trenton, New Jersey. Zone 2 of the Delaware River is managed or used for the following purposes: aquatic life, public water supply, primary and secondary recreation, and fish consumption; therefore, the water quality standards reflect these potential uses. Primary recreation includes all water-contact sports. The secondary recreation designation restricts activities to those where significant contact or water ingestion in minimized, such as boating, fishing, or shore activities.

Figure D-4 shows the permitted facilities intaking water and dischargers to the Delaware River in Zone 2 as identified by DRBC.

The designated use of Biles Creek is not specifically identified in DRBC's 2016 Assessment Report. However, since it is tidal influenced and it is included within Water Quality Management Zone 2, the same uses as identified above for the Delaware River should apply. Van Sciver Lake is similarly not identified in the DRBC's 2016 Assessment Report. Based on information provided on-line, this 1,396-acre spring-fed lake is used for recreational purposes.

Appendix D-18 provides a list of the DRBC's water quality objectives for the Zone 2 of the Delaware River. Also included in Appendix D-18 are Pennsylvania and New Jersey water quality standards. These standards would apply to the Delaware River as well. Additionally, the Pennsylvania standards would also apply to Van Sciver Lake and the on-site wetlands.

*Regarding 40 CFR 264.601(b)(8) The existing quality of surface waters and surface soils, including other sources of contamination and their cumulative impact on surface waters and surface soils* – Existing water quality of the Delaware River, including a sampling point at the mouth of Biles Creek, is provided in the DRBC's 2016 Assessment Report. Relevant portions of this report are provided in Appendix D-19. This data is qualitative as it indicates simply if the results meet DRBC's water quality criteria and can be found on the following tables in the DRBC 2016 Assessment Report in Appendix D-19 of this application:

- Table 11 – Dissolved oxygen
- Table 12 – pH
- Table 13 – Turbidity
- Table 14 – Temperature
- Table 15 – Total Dissolved Solids (TDS)

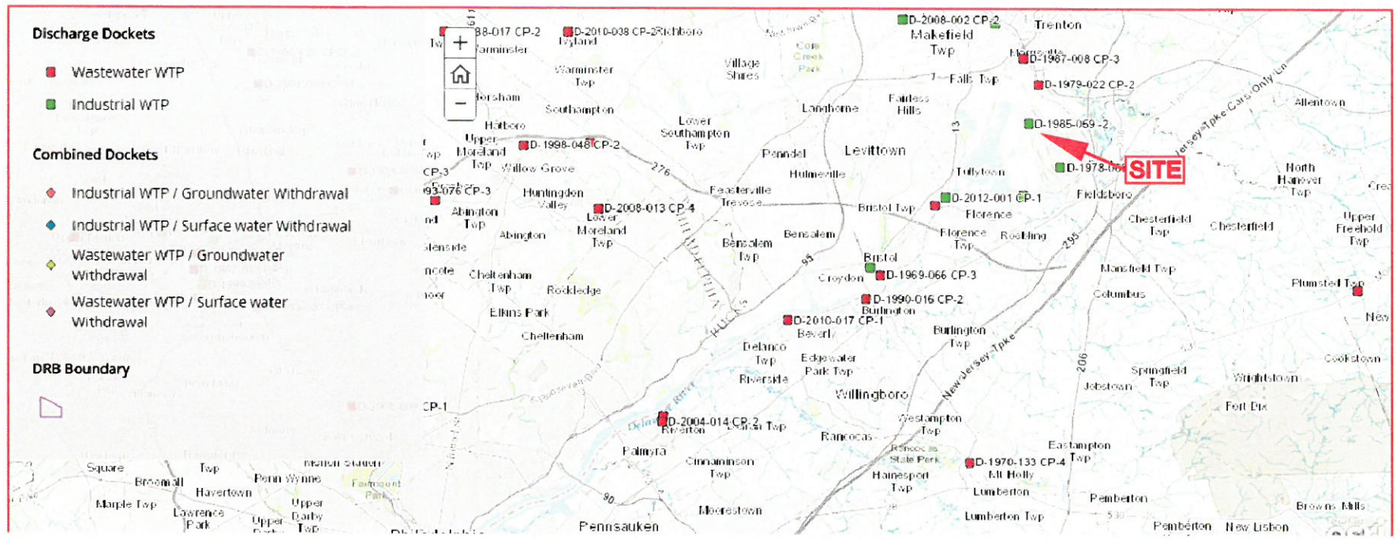


DISCHARGE DOCKETS

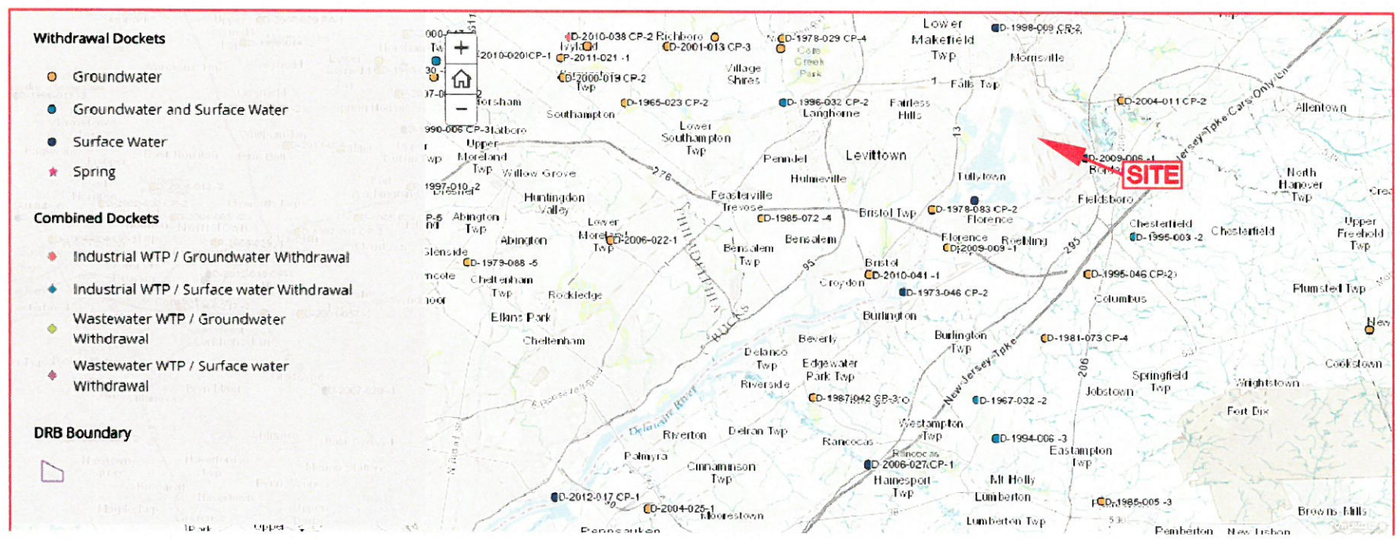


WITHDRAWAL DOCKETS

| | |
|---|---|
| IES ENGINEERS | Figure D–4 |
| | ELCON RECYCLING SERVICES, LLC<br>100 DEAN SIEVERS PLACE MORRISVILLE, PA 19067 |
| Date: 09/13/15 / File: EV161065.01 | PERMITTED WATER INTAKE USERS AND WASTEWATER DISCHARGERS TO THE DELAWARE RIVER ZONE 2 |

- Table 16 – Alkalinity
- Table 17 – Summary of Biological Assessment Results
- Table 18 – Public Water Supply Designated Use Summary
- Table 19 – Hardness
- Table 20 – Chlorides
- Table 21 – Primary and Secondary Recreational Assessment Results
- Table 22 – Fish Consumption Advisory Summary
- Appendix C, Table C1 – Human Health Objectives (Toxics)
- Appendix C, Table C2 – Aquatic Life Objectives
- Appendix C, Table C3 – Human Health Objectives (Carcinogens)
- Appendix C, Table C4 – Human Health Objectives (Systemic Toxicants)

In addition to the qualitative surface water data presented in the DRBC's 2016 Assessment Report, qualitative data is provided in Appendix D-20 of this application. This information was collected at the southern confluence of the intersection of Biles Creek and the Delaware River in the Summer of 2015 and includes metals, TDS, pH, and several other water quality factors.

Surface water samples were collected in three sampling locations at the wetlands on the western portion of Elcon's proposed property in 2014. The samples were analyzed for volatile organic compounds, semi-volatile organic compounds, metals, PCBs, and hardness. The results for all three samples were below 25 PA Code Chapter 93.c, Table 5, Water Quality Criteria for Toxic Substances (Fish and Aquatic Life Criteria and Human Health Criteria). The results of the sampling is provided in Appendix A-7 of Section A of this application in Table 4.5.

No surface water sampling data was located in the public domain for Van Sciver Lake. This appears to be a private lake.

Fourteen surface soil samples (1.5 to 2 feet below grade) and fourteen sub-surface soil samples (2 to 15 feet below grade) were also collected in 2014 at various locations on Elcon's proposed property. The samples were analyzed for volatile organic compounds, semi-volatile organic compounds, metals, PCBs, total petroleum hydrocarbons, percent moisture, and pH. All analytical results were below the Department's Medium-Specific Concentrations (MSC) for surficial samples (0 to 2 ft below grade) and subsurface samples (2 to 15 ft below grade) for the Department's non-residential direct-contact values. In addition, all soil samples were below the MSCs for the soil to groundwater numerical values for non-residential, non-use aquifers. Tables 4.1 to 4.4 in Appendix A-7 in Section A of this application present the analytical results for soil and sediment samples collected from the recent sampling locations, as well available historical data. A map showing the sampling locations is provided in Appendix A-7 in Section A. All soil samples were also below the EPA-Department Defaults Nonresidential Volatilization to Indoor Air numerical values.

No site-wide soil sampling data for KIPC could be located during a file review conducted at EPA Region III offices in July 2016. However, EPA provided soil sampling data from an individual site that is located approximately 3,000 feet south of Elcon's proposed property. The relevant

portions of the most recent sampling document are provided in Appendix D-21. The sampling results show conformance with Pennsylvania's Act 2 requirements.

*Regarding 40 CFR 264.601(b)(9) The patterns of land use in the region* – Figure B-3 in Section B of this application shows the land use in the area. The site itself as well as much of the nearby land is classified as either "developed, medium density" or "developed, high density."

*Regarding 40 CFR 264.601(b)(10) The potential for health risks caused by human exposure to waste constituents* – There are no planned releases from Elcon's operations into the surface water, wetlands, or the soil surface environment. The aquifer is a non-use aquifer, so it is not used for drinking water, or any other purposes. Additionally, the location of the proposed facility will be in an existing industrial park which has been used by heavy industry since the mid-1950s. Section A-12 of this application provides information on the likelihood of a spill reaching the surface water, wetlands, or the soil surface environment and the impacts to the area.

*Regarding 40 CFR 264.601(b)(11) The potential for damage to domestic animals, wildlife, crops, vegetation, and physical structures caused by exposure to waste constituents* – There are no planned releases from Elcon's operations into the surface water, wetlands, or the soil surface environment. The aquifer is a non-use aquifer, so it is not used for domestic animals, crops, or any other purposes. Any wildlife in the area will not be exposed to any new impacts in the surface waters, wetlands, or soil surface.

Through the Pennsylvania Natural Diversity Inventory (PNDI), Elcon provided information to the Pennsylvania Game Commission, Pennsylvania Department of Conservation and Natural Resources, (DNCR), Pennsylvania Fish and Boat Commission, and the U.S. Fish and Wildlife Service to identify any special concerns these agencies may have related to Elcon's proposed operations. The Game Commission and the U.S. Fish and Wildlife Service did not have any concerns regarding the proposed operations. The DCNR and the Fish and Boat Commission requested additional information for further review. Department-approved species-specific surveyors conducted a herpetological habitat assessment and a turtle nesting survey. Ultimately, both the DCNR and the Fish and Boat Commission concurred that the project will not impact any species of special concern. The results of the assessment and survey as well as the letters from the agencies are provided in Section A of this application in Appendix A-5, Attachment 16K.

As described earlier in this section, materials will be stored and handled in miscellaneous units that are compatible with the materials in the unit, and secondary containment structures will be constructed of compatible materials and/or coated with a material that is resistant to impacts from the materials being stored or handled in each miscellaneous unit.

Additionally, the location of the proposed facility will be in an existing industrial park which has been used by heavy industry since the mid-1950s. Section A-12 of this application provides information on the likelihood of a spill reaching the surface water, wetlands, or the soil surface environment and the impacts to the area.

*Regarding Item D-8d(2)(a), Environmental Assessment, on the Department's Checklist* – A release from Elcon's operations will not occur during routine operations; Elcon is not seeking permission to discharge any waste to the surface water, wetlands, or soil surfaces. For a release to the surface water, wetlands, or soil surface, a series of unlikely events and failures would all need to occur. Table D-14 identifies this series of events and the preventive measures that would need to malfunction for each step to occur for a release to the soil.

**TABLE D-14**
**SERIES OF HYPOTHETICAL EVENTS LEADING TO A POTENTIAL RELEASE TO THE SOIL SURFACE**

| Step | Event | Failures that Would Need to Occur | Result of Failed Step |
|---|---|---|---|
| 1 | Spill of tank | Failure of overfill protection system or<br>Catastrophic failure of tank due to condition not identified during daily inspection or periodic third party inspection | Release of contents of a tank to the secondary containment area |
| 2 | Spill from secondary containment system | Catastrophic failure of containment system due to condition not identified during routine inspection and<br>Failure of Elcon's on-site response team to react to incident | Release of spilled materials to paved area inside Elcon's facility |
| 3 | Release beyond barrier wall system | Spill by-passes barrier wall system and<br>Failure of Elcon's on-site response team to react to incident | Release of tank contents to on-site infiltration basin |
| 4 | Release from infiltration basin | Spill by-passes infiltration shut-off due to human error (open gate) and<br>Failure of Elcon's on-site response team to react and/or<br>Spill or seepage of spilled material out of infiltration basin | Release of material onto soil, most likely on Elcon's property. |

Section A-12 of this application discusses the probability of the above occurring. Also provided in Section A-12 of this application are the impacts of a spill to the soil, which could reach the subsurface environment and ultimately the Delaware River, using the Department's fate and transport model. This model typically produces conservative (i.e., high or worst-case) results. The results of this analysis show that if Elcon did nothing to clean-up or mitigate the impacts of the spill of a full tank of material, there would be no impacts water intake systems on the Delaware River.

Similarly, Table D-15 identifies this series of events and the preventive measures that would need to malfunction for each step to occur for a release to a wetland.

Section A-12 of this application discusses the probability of the above occurring. The closest down gradient wetland is on Elcon's property, approximately 200 feet from the stormwater infiltration basin outfall. The infiltration basin has a capacity of that exceeds the volume of the largest tank, so a spill would infiltrate into the subsurface, and could ultimately reach the Delaware River. Section A-12 of this application provides the impacts of a spill to the soil, ultimately reaching the subsurface environment and the Delaware River. The results of this analysis show that if Elcon did nothing to clean-up or mitigate the impacts of the spill of a full tank of material, there would be no impacts water intake systems on the Delaware River.

Finally, Tables D-16 and D-17 identify two possible series of events and the preventive measures that would need to malfunction for each step to occur for a release to a surface water body. One potential scenario (Table D-16) would be an indirect release to the Delaware River via a tank spill reaching the groundwater. The second scenario (Table D-17) would be a direct spill to the Delaware River.

Section A-12 of this application discusses the probability of an indirect release to the Delaware River via the groundwater as well as similar, but even more unlikely, types of failure events. This release scenario is essentially a continuation of the scenario described above in addressing Item D-8d(1)(a), related to subsurface impacts, but with the spill migrating to the surface water from the groundwater. Section A-12 provides information on the impacts on downstream water intakes systems. The results of this analysis show that if Elcon did nothing to clean-up or mitigate the impacts of the spill of a full tank of material, there would be no impacts water intake systems on the Delaware River.

**TABLE D-15**
**SERIES OF HYPOTHETICAL EVENTS LEADING TO A POTENTIAL RELEASE TO A WETLAND**

| Step | Event | Failures that Would Need to Occur | Result of Failed Step |
|---|---|---|---|
| 1 | Spill of tank | Failure of overfill protection system or<br>Catastrophic failure of tank due to condition not identified during daily inspection or periodic third party inspection | Release of contents of a tank to the secondary containment area |
| 2 | Spill from secondary containment system | Catastrophic failure of containment system due to condition not identified during routine inspection and<br>Failure of Elcon's on-site response team to react to incident | Release of spilled materials to paved area inside Elcon's facility |
| 3 | Release beyond barrier wall system | Spill by-passes barrier wall system and<br>Failure of Elcon's on-site response team to react to incident | Release of tank contents to on-site infiltration basin |
| 4 | Release from infiltration basin | Spill by-passes infiltration shut-off due to human error (open gate) and<br>Failure of Elcon's on-site response team to react and/or<br>Seepage of spilled material out of infiltration basin | Release of material onto soil surface |
| 5 | Release reaches wetland | Material runs over soil surface to wetland onsite | Spilled material reaches closest on-site down gradient wetland |

**TABLE D-16**
**SERIES OF HYPOTHETICAL EVENTS LEADING TO A POTENTIAL INDIRECT RELEASE TO A SURFACE WATER VIA THE GROUNDWATER**

| Step | Event | Failures that Would Need to Occur | Result of Failed Step |
|---|---|---|---|
| 1 | Spill of tank | Failure of overfill protection system or<br>Catastrophic failure of tank due to condition not identified during daily inspection or periodic third party inspection | Release of contents of a tank to the secondary containment area |
| 2 | Spill from secondary containment system | Catastrophic failure of containment system due to condition not identified during routine inspection and<br>Failure of Elcon's on-site response team to react to incident | Release of spilled materials to paved area inside Elcon's facility |
| 3 | Release beyond barrier wall system | Spill by-passing barrier wall system and<br>Failure of Elcon's on-site response team to react to incident | Release of tank contents to on-site infiltration basin |
| 4 | Release from infiltration basin | Spill by-passing infiltration shut-off due to human error (open gate) and<br>Failure of Elcon's on-site response team to react to react and/or<br>Seepage of spilled material out of infiltration basin | Release of material into subsurface environment |
| 5 | Release from subsurface environment | No actions taken by Elcon or regulatory agencies to mitigate the release | Migration of material into the surface water |

**TABLE D-17**
**SERIES OF HYPOTHETICAL EVENTS LEADING TO A POTENTIAL DIRECT RELEASE TO A SURFACE WATER**

| Step | Event | Failures that Would Need to Occur | Result of Failed Step |
|---|---|---|---|
| 1 | Crash of fully loaded tank truck | Driver error or<br>Error by another driver (e.g., drunk driver) or<br>Weather-related incident | Potential release of contents of a truck |
| 2 | Materials spill from truck | Failure of built in safety controls (e.g., roll-over protection, valve cages) | Release of contents of truck |
| 3 | Spilled materials breach on-board spill containment materials | On-board materials are not sufficient to contain spill or<br>Driver is not able to deploy on-board materials | Release of spilled materials to paved road surface |
| 4 | Spilled materials breach storm drain protection | Spill by-passes storm drain covers or<br>Driver or first responders are unable to deploy storm drain protection | Release of truck contents to storm drain system |
| 5 | Storm drain has no cut-off | Storm drain cannot be closed off | Discharge of truck contents to surface water body |

Section A-12 of this application discusses the probability of the above occurring as well as similar, but even more unlikely, types of failure events. A release from a truck spill is not Elcon's responsibility as the legal ownership of the waste has not been transferred over to Elcon nor is this release covered under the RCRA permit program. However, Elcon is addressing this potential release scenario in its goal of being thorough in identifying potential impacts to the environment. Section A-12 provides information on the impacts on downstream and upstream water intakes of a spill reaching the Delaware River. The results of this analysis show that if Elcon did nothing to clean-up or mitigate the impacts of the spill of a full tank of material, there would be no impacts water intake systems on the Delaware River.

*Regarding Item D-8d(2)(b), Performance Standards, on the Department's Checklist* – In addition to the performance standards identified above in the discussion of item D-8d(1)(b), Performance Standards, on the Department's Checklist, to prevent an incident and possible release to surface water, wetlands, and soil surfaces, Elcon proposes the following performance standards for the process tanks and equipment:

1. The discharge of the infiltration basin will be kept in a normally closed position. Prior to discharging stormwater from the basin, the water will be visually evaluated. If there are any indications of contamination, such as discoloration or organic odors, a sample will be collected and analyzed in the on-site laboratory.
2. For ready use, drain covers will be stored near stormwater drains that may drain waste in the event of a spill.

*D-8d(3) Protection of the Atmosphere*

Prevention of any releases that may have adverse effects on human health or the environment due to migration of waste constituents in air are addressed in this sub-section.

*Regarding 40 CFR 264.601(c)(1) The volume and physical and chemical characteristics of the waste in the unit, including its potential for the emission and dispersal of gases, aerosols and particulates* – The volume and physical and chemical characteristics of the waste is addressed above under Section D-8b. Table D-18 provides a summary of the emission sources that are part of the miscellaneous units, the potential type of air pollutants, and how the potential air pollutants will be controlled.

**TABLE D-18**
**EMISSION SOURCES AND AIR POLLUTION CONTROLS FOR MISCELLANEOUS UNITS**

| Emission Source | Type of Air Emission[1] | Air Pollution Control |
|---|---|---|
| Process tanks in Area 5 containing organic material | Gases (VOCs and vHAPs) | Main control train[2] |
| Process tanks in Area 5 containing inorganic material | None | Optional control by main control train |
| Process operations in Area 5 processing organic material | Gases (VOCs and vHAPs); some acid gases, $SO_x$, PM, and $NO_x$ | Main control train |
| Process operations in Area 5 burning fuel | Carbon monoxide and Greenhouse Gases | Use of clean fuels and good combustion controls |
| Process operations in Area 5 processing inorganic material | None | Optional control by main control train |
| Process operations in Area 5 handling potentially dusty materials solid or materials | PM | Silos – baghouses<br>Operating equipment – localized cyclone/scrubber followed by main control train. |
| Fugitive emissions from pipes, valves and flanges handling organic materials | Gases (VOCs and vHAPs) | Leak detection and repair program |

[1] Where:

VOCs – volatile organic compounds
vHAPs – volatile hazardous air pollutants
PM – particulate matter, including particulate hazardous air pollutants
$NO_x$ – oxides of nitrogen
$SO_x$ – oxides of sulfur

[2] Main control train consists of the following air pollution controls, in series: thermal oxidizer, selective non-catalytic reduction, gas scrubber

*Regarding 40 CFR 264.601(c)(2) The effectiveness and reliability of systems and structures to reduce or prevent emissions of hazardous constituents to the air* – The air pollution control system design is based on the successful operation of technologies at a similar facility in Israel. Figure D-5 is a schematic of the air pollution control configuration for the facility. All of the technology will meet or exceed Pennsylvania's Best Available Technology requirements for reducing air emissions. Details on the control systems will be provided in the air permit application. The effectiveness of the individual air pollution control technology system components are summarized on Table D-19.

All of the air pollution controls that will be used by Elcon are common air pollution control technologies and reliably used by tens of thousands of industries in the United States. Based on Elcon's actual operational experience for more than 10 years at its facility in Israel, the air pollution controls have functioned as designed at all times that waste is being processed. This high reliability is possible due to the continuous monitoring done on the air pollution control systems, including continuous emission monitors and parametric monitors (e.g., temperature, flow rate, and pressure drop). Additionally, there are interlock systems that automatically shut down material feed to the operations if the air pollution control system is not operating within specified parameters as well as the preventive maintenance program in place at the facility. The interlocks are shown on the P&IDs in Appendix D-7. A back-up air pollution control system (carbon adsorption) will be in place to control breathing losses from tanks and vessels that contain organic materials even if the primary air pollution system is off line. Elcon will have two scheduled weeks of full plant shut-down per year for preventive maintenance.

*Regarding 40 CFR 264.601(c)(3) The operating characteristics of the unit* – Operating characteristics vary for each piece of equipment. Information on operating characteristics can be found in the following locations in this application:

- Table D-6 provides the following information for the miscellaneous units: operating temperature, operating pressure, identifies if the unit is agitated, identifies if the unit is jacketed.
- Table D-8 provides a summary of the materials that will be handled by each miscellaneous unit.
- The P&IDs in Appendix D-7 provide details on the basic operating conditions.

*Regarding 40 CFR 264.601(c)(4) The atmospheric, meteorologic, and topographic characteristics of the unit and the surrounding area* – Elcon's miscellaneous units themselves do not have any atmospheric, meteorologic, or topographic characteristics.

**TABLE D-19**
**EFFECTIVENESS OF AIR POLLUTION CONTROL TECHNOLOGIES PROPOSED FOR ELCON'S MISCELLANEOUS UNIT OPERATIONS**

| Operation | Air Pollution Control Device | Pollutants Controlled | Anticipated Effectiveness | Basis for Effectiveness |
|---|---|---|---|---|
| Process operations[1] | Thermal oxidizer | Organic compounds | 99.9% | Operating experience in Israel; vendor will guarantee |
| | Selective non-catalytic reduction | $NO_x$ | Varies based on loading[2] | EPA reports 30-50% for gas-fired boilers; ICAC reports 32-66% for municipal waste incinerators[2] |
| | Scrubber | Acid gasses | 95% | Operating experience in Israel |
| | | Particulate matter | 95%[3] | EPA AP-42[4], Table B.2-3 and operating experience in Israel |
| | Carbon adsorption (back-up) | Organic compounds | 95% | EPA Handbook[5], Table 3.1 |
| Sludge drying | Cyclone and scrubbers[4] | Particulate matter | 97.5%[6] | EPA AP-42, Table B.2-3 |
| Sludge treatment (fugitive emissions) | Baghouse | Particulate matter | >99% | EPA AP-42, Table B.2-3 |
| Lime and sludge silos | Baghouses | Particulate matter | >99% | EPA AP-42, Table B.2-3 |

[1] For operations handling organic materials; ventilation for tanks or vessels containing inorganic operations is optional as emissions are negligible.

[2] Effectiveness is variable based on the $NO_x$ loading; there will be higher effectiveness on higher inlet loadings. EPA reference is *Air Pollution Control Technology Fact Sheet* (EPA-452/F-03-031). ICAC (Institute of Clean Air Companies) reference is *White Paper Selective Non-catalytic Reduction (SNCR) for Controlling $NO_x$ Emissions*, February 2008.

[3] Particulate matter emission sources are also controlled at the local source by other controls. Overall effectiveness for particulate matter sources will be > 99%.

[4] AP-42 is *Compilation of Air Pollutant Emission Factors Volume I: Stationary Point and Area Sources* published by EPA.

[5] EPA Handbook is *Handbook Control Technologies for Hazardous Air Pollutants*, EPA/625/6-91/014, 1991.

[6] The cyclone and scrubber precede another scrubber which is also used to control general process emissions. Overall effectiveness for all of the particulate matter controls will be >99%.

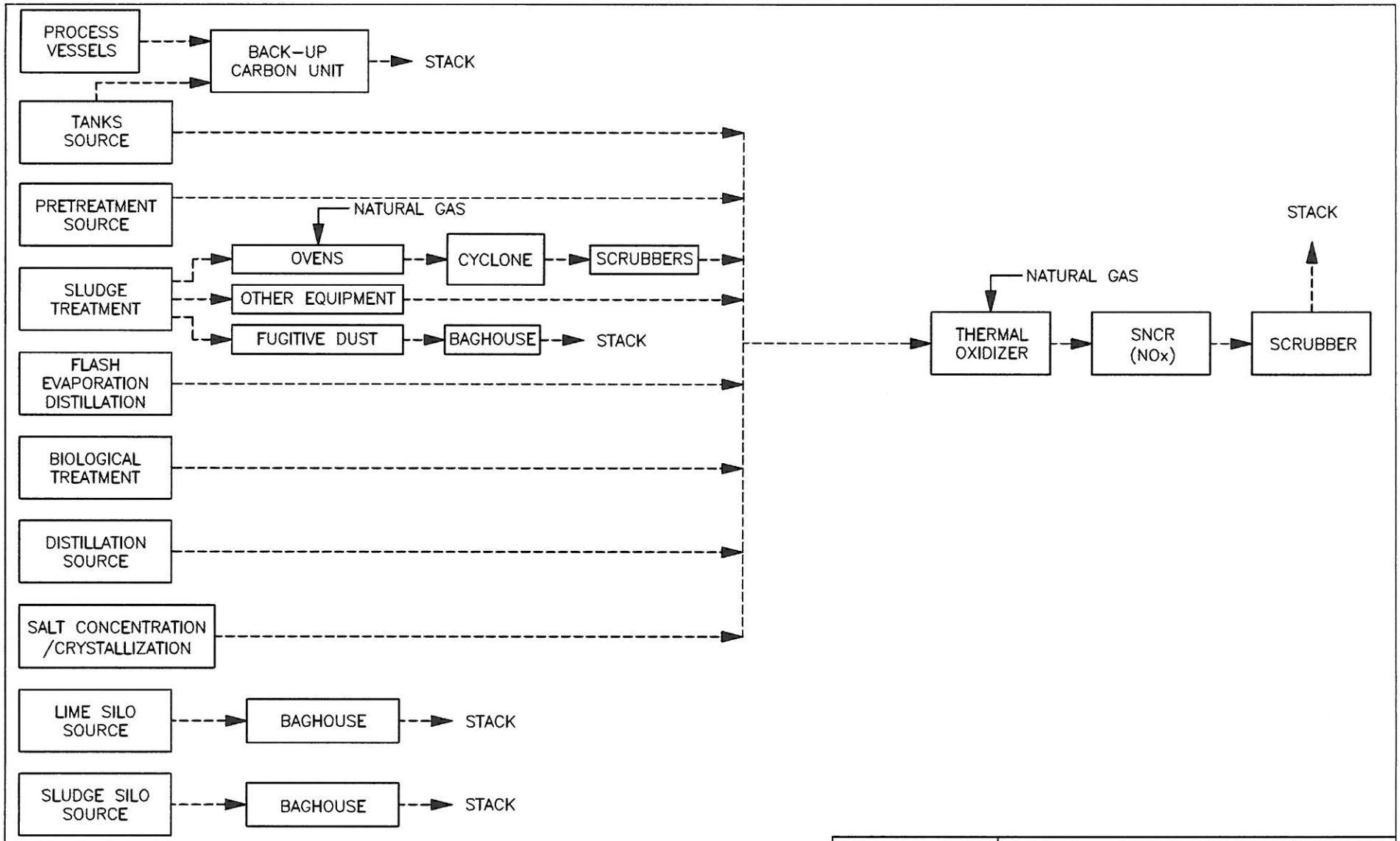


IES ENGINEERS

Date: 01-03-17 File: EV171065.01

Figure D-5

ELCON RECYCLING FACILITY
FALLS TOWNSHIP, BUCKS COUNTY, PA

GENERAL SCHEMATIC
AIR POLLUTION EMISSION SOURCES

Meteorological surface data (e.g., wind speed, direction, temperature) for Trenton, New Jersey, and atmospheric characteristics (e.g., upper air temperature, wind speed) for Washington Dulles International Airport in Loudoun, Virginia, will be incorporated into the air dispersion analysis that will be provided in a separate submittal to the Department's Air Quality personnel, as requested by the Department. These surface and upper air locations are the closest stations with representative and complete meteorological data and the data recommended by the Department for use with the air dispersion analysis for Elcon. Appendix D-22 includes a disk containing the surface and upper air data. Text is provided with this attachments that includes a description of the data fields for each set of data. This data was provided by the Department's Air Quality staff in Harrisburg, Pennsylvania.

Bucks County is part of Climate Division PA-3 (Southeast Piedmont) as classified by the National Oceanic & Atmospheric Administration (NOAA). Appendix D-17 provides a map of Pennsylvania showing the counties that are part of the Climate Division. Also included in Appendix D-17 is a summary of climatic data from NOAA from 1971 to 2000 as well as monthly data and a mean for the period from the Pennsylvania State Climatologist for the period of 1899 through June 2016.

The area is either considered a "humid subtropical climate zone" under the Köppen climate classification, or a temperate maritime climate classification under the Trewartha climate classification. In general, summers are typically hot and muggy, fall and spring are generally mild, and winter is cold. Snowfall is highly variable, with some winters bringing only light snow and others bringing several major snowstorms. Precipitation is generally spread throughout the year. Appendix D-17 provides summaries of various minimum, maximum, and mean meteorological data.

Regarding topographic characteristics of the area:

- Figure B-1 in Section B of this application provides a USGS topographic map of the area
- Drawing C101 in Section B, Appendix B-1 of this application provides a site specific contour map of the area (prior to regrading)
- Section A Appendix A-5 Attachment 16L-3 of this application is a preliminary grading plan of the site for Elcon's operations

*Regarding 40 CFR 264.601(c)(5) The existing quality of the air, including other sources of contamination and their cumulative impact on the air* – EPA has established National Ambient Air Quality Standards (NAAQSs) for six principal pollutants, which are referred to as criteria pollutants: carbon monoxide (CO); lead; nitrogen dioxide ($NO_2$); ozone; particulate matter (PM), including PM that is less than or equal to 2.5 micrometers (μm) ($PM_{2.5}$) and PM that is less than or equal to 10 μm ($PM_{10}$); and sulfur dioxide ($SO_2$). The primary NAAQSs are designed to protect human health, including sensitive populations, such as those with asthma, children, and the elderly. Secondary NAAQSs have also been set to protect public welfare including protection against decreased visibility, and damage to animals, crops, vegetation, and buildings.

The primary and secondary NAAQSs apply to all areas of the country. Areas that meet the established standards for a given pollutant are deemed to be in attainment for that pollutant. Areas that do not meet a NAAQS are classified as non-attainment. The area where Elcon is proposing to locate its facility is classified as attainment for all pollutants, except for ozone. The entire Philadelphia area, including the counties surrounding the City of Philadelphia, is classified as a moderate non-attainment area for ozone. Oxides of nitrogen ($NO_x$) and volatile organic compounds (VOCs) are precursors to the formation ozone and are more closely regulated in this area because of the non-attainment classification.

EPA has developed stringent rules to prevent further degradation of ambient air quality for areas that are classified as non-attainment under the Clean Air Act while still allowing for growth in the non-attainment area. Pennsylvania has adopted rules that incorporate EPA's stringent requirements and implements these requirements under the Non-attainment New Source Review program under PA Code 25 Part 127, Subchapter E. For areas that are classified as moderate non-attainment, as the Philadelphia area is, new facilities that are considered major (i.e., those with the potential to emit more than 25 tons per year of VOCs or $NO_x$) are required to comply with the Non-attainment New Source Review rules. Elcon will not be classified as a major source under the Non-attainment New Source Review program and its air quality permit will include federal enforceable limitations to ensure that it remains classified as a minor source. These limitations will include, for example, the use of highly effective air pollution control devices, operating practices, monitoring, recordkeeping, and reporting.

Table D-20 provides a summary of the NAAQS ambient monitoring data for Bucks County, Pennsylvania, and Mercer County, New Jersey. The monitors are determining ambient concentrations of the various pollutants in the area, including cumulative emissions from other emission sources in the area as well as other emission sources that are upwind of the monitor. The monitors determine impacts of manufacturing operations as well as vehicular traffic or biogenic sources. Based on information from EPA's website, approximately 49% of the $NO_x$ emissions generated in Pennsylvania are from mobile sources, versus 13% for industrial sources. Similarly for VOC emissions, approximately 21% of the emissions are generated by mobile sources and 4.3% by industrial operations.

Table D-21 provides a summary of the quantity of actual emissions, by criteria pollutant, for existing emission sources in the area (Bucks County) for 2014 and 2015 that are required to report emissions to the Department. These emissions are for manufacturing or combustion sources and do not include mobile sources. The list of actual emission sources contributing to the total emissions for individual facilities that are required to report emissions to the Department are provided in Appendix D-23 for 2014 and 2015.

## TABLE D-20
## SUMMARY OF NAAQS MONITORING DATA FOR BUCKS COUNTY, PA, AND MERCER COUNTY, NJ

| Pollutant | Primary/ Secondary | Averaging Period | NAAQS | Actual Data | | |
|---|---|---|---|---|---|---|
| | | | | Year | Bucks | Mercer |
| CO | Primary | 8 hours | 9 ppm, not to be exceeded more than once per year | 2015 | ND | ND |
| | | | | 2014 | 1.4 | ND |
| | | | | 2013 | 1.8 | ND |
| | | | | 2012 | 1.2 | ND |
| | Primary | 1 hour | 35 ppm, not to be exceeded more than once per year | 2015 | ND | ND |
| | | | | 2014 | 1.8 | ND |
| | | | | 2013 | 2.4 | ND |
| | | | | 2012 | 1.9 | ND |
| $NO_2$ | Primary | 1 hour | 100 ppb, 98th percentile, averaged over 3 years | 2015 | 42 | ND |
| | | | | 2014 | 43 | ND |
| | | | | 2013 | 34 | ND |
| | | | | 2012 | 39 | ND |
| | Primary and Secondary | Annual | 53 ppb, annual mean | 2015 | 10 | ND |
| | | | | 2014 | 8 | ND |
| | | | | 2013 | 8 | ND |
| | | | | 2012 | 10 | ND |
| Ozone | Primary and Secondary | 8 hour | 0.075 ppm, Annual fourth-highest daily maximum 8-hour concentration, averaged over 3 years | 2015 | 0.082 | 0.075 |
| | | | | 2014 | 0.071 | 0.071 |
| | | | | 2013 | 0.073 | 0.070 |
| | | | | 2012 | 0.082 | 0.081 |
| PM2.5 | Primary and Secondary | 24 hour | 35 ug/mg$^3$, 98th percentile, averaged over 3 years | 2015 | 29 | 24 |
| | | | | 2014 | 32 | 24 |
| | | | | 2013 | 37 | 24 |
| | | | | 2012 | 29 | 21 |
| | Primary | Annual | 12 ug/mg$^3$, annual mean, averaged for 3 years | 2015 | 11.5 | 8.2 |
| | | | | 2014 | 11.5 | 8.7 |
| | | | | 2013 | 11.6 | 9.1 |
| | | | | 2012 | 10.9 | 8.8 |
| | Secondary[1] | Annual | 15 ug/mg$^3$, annual mean, averaged for 3 years | 2015 | ND | ND |
| | | | | 2014 | | |
| | | | | 2013 | | |
| | | | | 2012 | | |
| $SO_2$ | Primary | 1 hour | 75 ppb, 99th percentile of 1-hour daily maximum concentrations, averaged over 3 years | 2015 | 8 | ND |
| | | | | 2014 | 13 | ND |
| | | | | 2013 | 16 | ND |
| | | | | 2012 | 15 | ND |
| | Secondary[2] | 3 hour | 0.5ppm, not to be exceeded more than once per year. | 2015 | ND | ND |
| | | | | 2014 | | |
| | | | | 2013 | | |
| | | | | 2012 | | |

Source: US EPA AirData; https://www3.epa.gov/airdata/
Where: ND is "no data"

[1]The EPA AirData Air Quality Statistics report does not include data for secondary standards for $PM_{2.5}$. However, the $PM_{2.5}$ emissions for Bucks and Mercer Counties are below the secondary standards of 15ug/mg$^3$ calculated as annual mean, averaged over 3 years.

[2] The data is not available as EPA AirData Air Quality Statistics report uses the previous $SO_2$ standards [0.14ppm (24-hours) and 0.03ppm (annual)] to calculate the $SO_2$ emissions for Bucks and Mercer Counties.

**TABLE D-21**
**SUMMARY OF ACTUAL EMISSIONS FROM EXISTING EMISSION SOURCES IN BUCKS**

| Year | Actual Pollutant Emissions[1] (tpy) | | | | | | |
|---|---|---|---|---|---|---|---|
| | CO | Lead | $NO_x$ | $PM_{2.5}$ | $PM_{10}$ | $SO_x$ | VOC |
| 2015 | 327 | 0.2984 | 1,395 | 124 | 190 | 237 | 422 |
| 2014 | 333 | 0.0634 | 1,388 | 123 | 175 | 247 | 427 |

Source: Department website – PADEP, eFacts facility Emission Report:
[1] For facilities in Bucks County that are required to report annual actual emissions to the Department.

In addition to the NAAQS network of ambient monitors, EPA uses a tool called the Air Quality Index (AQI) to provide information about local air quality. The AQI is calculated based on four criteria pollutants and it is an indicator of air quality conditions in six categories ranging from good to hazardous. For purposes of this application, AQI data is being provided as a tool to show "cumulative" impacts of multiple air pollutants on local air quality. AQI data for Bucks County, Pennsylvania, and Mercer County, New Jersey, is provided on Table D-22. The table shows that there have been no hazardous or very unhealthy air quality days in either county between 2012 and 2015. There is typically one unhealthy day per year in Bucks County and none (in the past 4 years) in Mercer County.

In addition to federal NAAQS, Pennsylvania and New Jersey have established ambient guideline levels for screening purposes for other pollutants (non-criteria pollutants), such as the hazardous air pollutants identified by EPA. The Department determines the ambient screening guideline values for individual pollutants based on information in EPA's Integrated Risk Information System (IRIS), or lacking data in IRIS, Occupational Health and Safety Administration OSHA data, or similar sources, with safety factors applied. The New Jersey Department of Environmental Protection (NJDEP) ambient screening guideline values have been established based on the agency's reviews of various studies of human risk data. NJDEP has complied this data and it is provided in Appendix D-24. New Jersey's screening level approach also takes into consideration cumulative impacts of multiple pollutants.

There is some monitoring data available for non-NAAQS pollutants. Appendix D-25 provides data available for Philadelphia, Pennsylvania, and Camden, New Jersey. There were no non-NAAQS ambient monitors identified in Bucks County, Pennsylvania, and Mercer County, New Jersey, in EPA's database.

Table D-23 provides a summary of actual HAP emission data reported by facilities in Bucks County by facilities that are required to report emissions annually to the Department for several representative HAPs. Appendix D-26 identifies the emission sources in Bucks County for the pollutant totals provided on Table D-23.

Elcon's operation will have the potential to emit Greenhouse Gas (GHG) emissions. There are no NAAQSs for GHG pollutants; however, there is a federal standard that requires facilities to report GHG emissions that emit more than 25,000 metric tons per year of GHG emissions. Table D-24 summarizes facilities in Bucks County that report GHG emissions along with their actual emissions for 2014 through 2015. Estimated actual GHG emissions from Elcon's proposed operations are below 25,000 metric tons per year.

**TABLE D-22**
**AIR QUALITY INDEX (AQI) DATA FOR BUCKS COUNTY PENNSYLVANIA AND MERCER COUNTY NEW JERSEY FOR 2012 TO 2015**

**Bucks County, Pennsylvania**

| | 2012 | 2013 | 2014 | 2015 |
|---|---|---|---|---|
| No. of Days with AQI | 363 | 365 | 365 | 363 |
| No. of Days with Good Air Quality | 204 | 217 | 206 | 204 |
| No. of Days with Moderate Air Quality | 135 | 134 | 151 | 142 |
| No. of Days with Unhealthy for Sensitive Groups Air Quality | 23 | 14 | 7 | 16 |
| No. of Days with Unhealthy Air Quality | 1 | - | 1 | 1 |
| No. of Days with Very Unhealthy Air Quality* | - | - | - | - |
| AQI Maximum | 161 | 128 | 172 | 164 |
| AQI 90th Percentile | 85 | 78 | 72 | 84 |
| AQI Median | 48 | 45 | 48 | 46 |

**Mercer County, New Jersey**

| | 2012 | 2013 | 2014 | 2015 |
|---|---|---|---|---|
| No. of Days with AQI | 366 | 365 | 365 | 365 |
| No. of Days with Good Air Quality | 249 | 242 | 253 | 246 |
| No. of Days with Moderate Air Quality | 97 | 120 | 106 | 109 |
| No. of Days with Unhealthy for Sensitive Groups Air Quality | 20 | 3 | 6 | 10 |
| No. of Days with Unhealthy Air Quality | - | - | - | - |
| No. of Days with Very Unhealthy Air Quality* | - | - | - | - |
| AQI Maximum | 143 | 122 | 119 | 147 |
| AQI 90th Percentile | 77 | 68 | 68 | 77 |
| AQI Median | 43 | 43 | 43 | 42 |

Source: EPA AirData (Air Quality System Database)

* Includes AQI categories of very unhealthy and hazardous

**TABLE D-23**
**SUMMARY OF ACTUAL HAP EMISSIONS FROM EXISTING SOURCES IN BUCKS COUNTY**

| Pollutant | Actual Pollutant Emissions[1] (tpy) | |
|---|---|---|
| | 2015 | 2014 |
| Methanol | 5.0932 | 6.8661 |
| Benzene | 5.9932 | 2.6154 |
| Toluene | 8.8145 | 9.9698 |
| Triethylamine | 0.0015 | 0.0022 |
| Glycol Ethers | 1.6290 | 3.2995 |
| Methylene Chloride | 0 | 0 |
| Trichloroethylene | 0.6175 | 1.0945 |
| Methyl Isobutyl Ketone | 1.3445 | 1.7463 |
| Chloroform | 0 | 0 |
| Hydrochloric Acid | 46.17 | 36.9 |
| Arsenic | 0 | 0.0001 |
| Beryllium | 0 | 0 |
| Cadmium | 0.0004 | 0.0005 |
| Chromium | 0.0006 | 0.0006 |
| Manganese | 0.1447 | 0.1169 |
| Nickel | 0.002 | 0.0017 |
| Lead | 0.2984 | 0.0634 |
| Selenium | | 0 |

Source: Department website – PADEP, eFacts facility Emission Report:
[1] For facilities in Bucks County that are required to report annual emissions to the Department.

**TABLE D-24**
**SUMMARY OF ACTUAL GHG EMISSIONS FROM EXISTING EMISSION SOURCES IN BUCKS COUNTY**

| Facility | Actual GHG Emissions[1] (tpy) | |
|---|---|---|
| | 2015 | 2014 |
| Fairless Energy, LLC | 2,452,328 | 2,730,615 |
| Grows Landfill, Waste Management | 77,441 | 96,731 |
| Tullytown Resource Recovery Facility Landfill | 101,260 | 94,582 |
| US Steel Fairless Hills | 25,322 | 34,888 |
| Wheelabrator Falls Township | 199,596 | 199,039 |

Source: From EPA's FLIGHT Tool (http://ghgdata.epa.gov/ghgp)
[1] For facilities in Bucks County that are required to report annual emissions to the EPA under 40 CFR 98 Mandatory GHG Reporting Rule).

*Regarding 40 CFR 264.601(c)(6) The potential for health risks caused by human exposure to waste constituents* – Untreated waste will not be released to the atmosphere during normal operations.

Elcon's proposed operations have the potential to emit both criteria and non-criteria pollutants. Under the Clean Air Act, the facility will be considered a minor source of air pollution since Elcon will voluntarily accept federally enforceable limitations. These limitations will be implemented through a federally enforceable air quality permit to limit Elcon's emissions to below major source levels. A comprehensive monitoring, recordkeeping, and reporting program, stipulated in the air quality permit, will ensure continuous compliance with the self-imposed limits.

An ambient air quality impact analysis will be provided to the Department; additional details on this analysis are provided below under the heading "*Regarding Item D-8d(3)(a), Environmental Assessment, on the Department's Checklist.*" The analysis will demonstrate conformance with the primary NAAQSs, including background data from other emissions sources. These standards were established by EPA to protect human health. Additionally, the proposed facility will comply with both the Department's and NJDEP's guidelines for ambient air impacts from non-criteria pollutants. Conformance with the federal primary NAAQSs and the Department and NJDEP guideline levels for non-criteria pollutants meets acceptability criteria for ambient air quality impacts.

*Regarding 40 CFR 264.601(b)(7) The potential for damage to domestic animals, wildlife, crops, vegetation, and physical structures caused by exposure to waste constituents* – Untreated waste will not be released to the atmosphere during normal operations.

An ambient air quality impact analysis will be provided to the Department; additional details on this analysis are provided below under the heading "*Regarding Item D-8d(3)(a), Environmental*

*Assessment, on the Department's Checklist.*" The analysis will demonstrate conformance with the secondary NAAQSs from other emissions sources. These standards were established by EPA to protect public welfare, including decreased visibility impacts and damage to animals, crops, vegetation, and buildings. Conformance with the federal secondary NAAQSs criteria for ambient air quality impacts meets acceptability criteria for ambient air quality impacts.

*Regarding Item D-8d(3)(a), Environmental Assessment, on the Department's Checklist* – There are potential air emissions during normal operations. The emissions will be regulated by a federally enforceable air permit; the air permit application will be submitted to the Department following the submission of the RCRA Part B application. The application will describe, in detail, the air pollution control equipment and operating procedures that will be in place and proposed monitoring, record keeping and reporting requirements to ensure continued compliance with all applicable state and federal air quality requirements.

An ambient air quality impact assessment will be prepared and submitted to the Department. As requested by the Department during Elcon's pre-application meeting, this assessment will be submitted to the Bureau of Air Quality in Harrisburg, Pennsylvania. Prior to submitting the results of the impact assessment, Elcon will provide a pre-assessment modeling protocol for the Department's review and comment. The protocol will provide details on the methodology for the analysis, data input parameters, models that will be used, and how the results will be provided to the Department. For the assessment, Elcon will use air dispersion models developed by EPA specifically for this type of analysis for documenting conformance with the NAAQSs and Pennsylvania guideline values for non-criteria pollutants. A detailed report of this assessment will be provided to the Department's Bureau of Air Quality. Elcon will comply with all applicable air quality requirements.

*Regarding Item D-8d(3)(b), Performance Standards, on the Department's Checklist* – In addition to the performance standards identified above in the discussion of item D-8d(1)(b) and item D-8(2)(b), Performance Standards, on the Department's Checklist, to prevent an incident and possible release to the atmosphere, Elcon proposes the performance standards listed below for the process tanks and equipment. These items will be outlined in the air permit application and will be made federally enforceable through the issuance of the air quality permit.

1. Air pollution controls that meet or exceed Pennsylvania's Best Available Technology requirements will be used to reduce emissions during operations, including start-ups, shutdowns, and malfunctions. Processing operations will not occur until the appropriate air pollution controls are operating at required performance levels.

2. An interlock system will be in place that prevents the start-up of the process equipment unless the air pollution controls are operating at required performance levels.

3. A carbon adsorption unit will be used as a back-up to the primary air pollution control device (thermal oxidizer) to control breathing losses of organic emissions from tanks and vessels in the event of a malfunction of the primary air pollution control system.

4. An emergency generator will be onsite in the event of a power outage to allow for safe shut down of the process operations and continued ventilation of working and breathing losses for tanks and vessels to the air pollution control device.

5. The main stack will be equipped with the following continuous emission monitors to document ongoing and real time compliance with emission limits from the main stack: oxides of nitrogen, total organic carbon, and sulfur oxides.

6. Emission testing will be conducted as stipulated in the air permit. Typically, emission testing is done after the operations are up and running at "normal maximum" production rates. Periodic emission re-testing will be stipulated in the operating permit.

Although not regulated under the environmental programs (e.g., RCRA or the Clean Air Act), Elcon will also comply with the federal the OSHA Process Safety Management (PSM) Program. The rigorous program requires conformance with fourteen key elements for affected equipment and processes, including, but not limited to:

- A process hazard analysis, including: 1) Engineering and administrative controls applicable to the hazards and their interrelationships such as appropriate application of detection methodologies to provide early warning of releases; 2) Consequences of failure of engineering and administrative controls; 3) Human factors; 4) A qualitative evaluation of a range of the possible safety and health effects of failure of controls on employees in the workplace.

- Development and implementation of written operating procedures that provide clear instructions for safely conducting activities involved in each covered process consistent with the process safety information. The procedures need to address steps for each operating phase: initial startup, normal operations, temporary operations, emergency shutdowns, emergency operations, normal shutdowns, and startups after any type of shutdown.

- Operating limits, including consequences of deviations and steps required to correct or avoid deviation.

- Safety and health considerations, such as precautions necessary to prevent exposure, including engineering controls, administrative controls, and personal protective equipment; control measures to be taken if physical contact or airborne exposure occurs; and quality control for raw materials and control of hazardous chemical inventory levels.

- Safety systems and their functions.

- Training

- Pre-start-up safety review

- Mechanical integrity

D-8e Monitoring, Analysis, Inspection, Response, Reporting, and Corrective Action

Monitoring, testing, analytical data, inspections, response, and reporting procedures and frequencies for miscellaneous units will be in place to ensure compliance 40 CFR Part 264.602, including compliance with the following additional regulatory references: 40 CFR Parts 264.601 (relating to environmental performance standards for miscellaneous units), 40 CFR Part 264.15 (relating to general inspection requirements), 40 CFR Part 264.33 (relating to testing and maintenance under the PPC Plan), 40 CFR Part 264.75 (relating to the biennial report), 40 CFR Part 264.76 (relating to un-manifested waste report), and 40 CFR Part 264.77 (relating to additional reports), as well as any additional requirements needed to protect human health and the environment identified in subsections D-8d(1), D-8d(2), and D-8d(3) of this application. The specific requirements related to monitoring, testing, analytical data, inspections, response, and reporting procedures and frequencies identified in the regulatory requirements are addressed below.

*40 CFR Part 264.601* – Information on the detection and monitoring equipment and interlock systems for the miscellaneous units is described in more detail earlier and is shown in detail on the P&IDs in Appendix D-7. In general, the process tanks include level indicators and interlocks to prevent overfilling (and spills) and the process equipment includes monitoring equipment, such as temperature, pressure, feed rate of materials to units, pH, etc., that is specific for each type of equipment. The specific monitoring equipment for each piece of miscellaneous unit is identified on the P&IDs in Appendix D-7.

The P&IDs in Appendix D-7 also include the parametric monitoring systems on the air pollution control devices that are used to control emissions from the miscellaneous units. In addition, particulate control devices will be equipped with pressure drop monitors and the outlet of the primary air pollution control device stack will include continuous monitoring of oxides of nitrogen, total organic carbon, and sulfur oxides. Specific details related to monitoring of potential sources of air emissions will be regulated by the Department in an air permit issued under its authority under the federal Clean Air Act. The air permit will be enforceable by both the Department and EPA.

Section G of this application, including the Contingency Plan, provides information related to plans and resources for responses to releases of hazardous waste or hazardous constituents from miscellaneous units.

*40 CFR Part 264.15* – Inspection requirements are discussed in detail in Section F of this application. In general, the equipment and containment structures will be inspected at least once per operating day to identify malfunctions and deterioration, operator errors, and discharges which may be causing or may lead to a release of hazardous waste constituents to the environment or a threat to human health.

A written schedule for inspecting monitoring equipment, safety and emergency equipment, security devices, and operating and structural equipment (such as secondary containment and sump pumps) that are important to preventing, detecting, or responding to environmental or human health hazards is provided in Section F of this application. The schedule will be kept at the facility. Section F also identifies the types of problems that will be looked for during the inspection as well as the inspection frequency. Prior to start-up, Elcon will develop area-specific, including individual pieces of equipment, inspection checklists to ensure that each inspection is conducted thoroughly and in enough detail to identify potential issues prior to a malfunction. An example inspection checklist is also provided in Section F.

Under 25 PA Code Part 264a.15, Elcon has provided a schedule for the construction of a hazardous waste management facility to the Department for approval. The schedule provides for inspection and approval by the Department during each phase of construction. This schedule is provided in Section F of this application.

*40 CFR Part 264.33* – All facility communications or alarm systems, fire protection equipment, spill control equipment, and decontamination equipment, where required, will be tested and maintained as necessary to assure its proper operation in time of emergency. Details on these procedures are outlined in Section F of this application.

*40 CFR Part 264.75* – Upon start-up of operations, Elcon will prepare and submit a copy of a biennial report to the Department by March 1 of each even numbered year, using EPA form 8700-13B, as modified by the Department. The report will cover facility activities during the previous calendar year and will include, at a minimum:

- The EPA identification number, name, and address of the facility.
- The calendar year covered by the report.
- The EPA identification number of each hazardous waste generator from which Elcon received a hazardous waste during the year.
- A description and the quantity of each hazardous waste Elcon received during the year, listed by EPA identification number of each generator.
- The method of treatment, storage, or disposal for each hazardous waste.
- The most recent closure cost estimate under 40 CFR Part 264.142.
- A description of the efforts undertaken during the year to reduce the volume and toxicity of waste generated.
- A description of the changes in volume and toxicity of waste actually achieved during the year in comparison to previous years.
- A certification signed by the owner or operator or his authorized representative.

*40 CFR Part 264.76* – Regarding un-manifested waste reports, upon start-up of operations, if Elcon accepts for treatment or storage from an off-site source without an accompanying manifest, or without an accompanying shipping paper as described, and if the waste is not excluded from the manifest requirement, then Elcon will prepare and submit a letter to EPA and the Department within 15 days after receiving the waste. The un-manifested waste report will contain the following information:

- The EPA identification number, name and address of the facility.
- The date the facility received the waste.
- The EPA identification number, name and address of the generator and the transporter, if available.
- A description and the quantity of each un-manifested hazardous waste.
- The method of treatment or storage for each hazardous waste.
- A certification signed by the owner or operator of the facility or his authorized representative.
- A brief explanation of why the waste was un-manifested, if known.

*40 CFR Part 264.77* – Upon start-up of operations, in addition to submitting the biennial reports and un-manifested waste reports described above, Elcon will also report to EPA and the Department:

- Releases, fires, and explosions that require the implementation of the Emergency Plan
- Facility closures
- As otherwise required by 40 CFR 264, subparts I (containers), J (tanks), X (Miscellaneous Units), AA (process vents), BB (equipment leaks), and CC (air emission standards).

*40 CFR Part 264.101* – See Section J of this application for information related to the portion of the solid waste management unit. There is a portion of a pre-existing unit on Elcon's property and U.S. Steel retains responsibility related to this solid waste management unit.

*Additional Requirements* – Elcon has identified a number of additional requirements to protect human health and the environment as listed above in Items D-8(d)(1)(b), D-8(d)(2)(b), and D-8(d)(3)(b).

*40 CFR Part 270.23(a)* – Detailed descriptions of the miscellaneous units are provided in earlier portions of this section (D-8) on Miscellaneous Units.

*D-8e(1) Elements of a Monitoring Program*

Section C of this application provides details on the waste monitoring program, including sampling, analysis, and evaluation of data. Specific information on the monitoring device locations for miscellaneous units are provided on the P&IDs in Appendix D-7. The P&IDs include Interlock Lists associated with each operating area indicate the circumstances that would cause a shutdown or other protective measure, such as adjustment of pH or opening or closure of a specified valve, to prevent a malfunction. Protective levels will be identified in the air permit application and included in the air permit specifically related to operating conditions for the air pollution control devices as well as operating parameters that have the potential to emit air pollutants.

Response procedures for malfunctions are provided in the Emergency Response Plan in Section G of this application. Inspection schedules are provided in Section F of this application.

*D-8e(2) Air Monitoring Alternatives*

An ambient monitoring system is already in place that is operated by EPA and state and local agencies and that adequately addresses local air quality monitoring. Elcon is proposing to specifically monitor its sources of air pollution directly so that operations can be immediately adjusted, including shutdown, if a monitoring device indicates a potential issue with air emissions. Waiting for an impact to show up at a local monitor, even one at or near the property line, can take much longer than directly monitoring the equipment exhaust points. The details on the proposed monitoring systems will be provided with the air permit application and will become enforceable by both the Department and EPA through the air permit.

The primary emission point for the miscellaneous units will be the Main Stack. This will include the ventilation of the equipment that has the potential to emit pollutants from the process operations and tanks containing organic compounds. Air pollution control devices on the Main Stack will reduce particulate matter, VOCs, HAPs, $SO_x$, acid gases, and $NO_x$. The following parameters will be monitored on this exhaust point:

- Continuous and real time monitoring using continuous emissions monitoring systems (CEMSs) for organic compounds, $SO_x$, and $NO_x$ at the release to the atmosphere. Interlocks will be in place to either adjust feed parameters, such as material flow, pH, or temperature adjustments, or to shut down the feed to the process equipment, effectively ceasing production, if necessary.

- Parametric monitors will also be employed to ensure optimum performance of the air pollution controls. The actual monitors vary by control equipment, but at a minimum will include:
    - Temperature and airflow rate of the thermal oxidizer to ensure optimum destruction and residence time of the organic constituents.
    - Water flow rates, pressure drop, and pH for the packed tower scrubber to ensure particulate matter removal and acid gas neutralization.
    - Ammonia feed rate for the selective non-catalytic reduction device to reduce $NO_x$ emissions. (Ammonia is the reducing agent for the $NO_x$.)

- Process operations will be monitored to document that the individual miscellaneous units are performing as intended. The actual monitoring varies for each type of unit and is provided on the P&IDs in Appendix D-7.

- Periodic emission testing of the exhaust to provide third-party verification that: 1) emissions comply with permit limits, 2) the parametric monitoring ranges are appropriate for the compliance limits, and 3) the CEMSs are performing as designed.

- Waste analysis will be used to identify upper bounds of certain constituents that the process can effectively treat without impacting the environment. Elcon will blend waste or limit throughput of these constituents, as needed.

In addition to the comprehensive monitoring on the Main Stack, other minor stacks that are filtering particulate matter, such as bin vents on storage silos (e.g., lime), will be equipped with gauges to continuously read pressure drop across the filter system. Pressure drop provides a routine and reliable means of determining the proper operation of the filter system. A pressure drop that is too low is an indicator that there could be a hole in the filter system and a pressure drop that is too high indicates a potential blockage or overloaded filter.

In accordance with the RCRA air quality requirements, certain equipment will be periodically monitored for organic leaks using a hand held meter. Additional details on the specific air monitoring required under the RCRA program is provided in Sections M, N, and O.

## D-9 BOILERS AND INDUSTRIAL FURNACES

No boilers or industrial furnaces are proposed for hazardous waste management. Therefore, this section is not applicable to the Elcon Facility.

## D-10 CONTAINMENT BUILDINGS

No containment buildings are proposed for hazardous waste management. Therefore, this section is not applicable to the Elcon Facility.

## D-11 DRIP PADS

No drip pads are proposed for hazardous waste management. Therefore, this section is not applicable to the Elcon Facility.

## D-12 BARRIER WALL

In addition to the secondary containment requirements for waste treatment and storage operations that are stipulated in the rules, Elcon is electing to install an additional barrier wall around the areas of the plant that will actively handle wastes. There are no environmental regulatory requirements related to this wall, since its installation is elective. This barrier wall will serve two functions: 1) to ensure that all active waste areas are outside of the 500-year flood plain, and 2) to provide an additional containment area in the unlikely release of material from the secondary containment areas. The barrier wall will have the capacity to contain the contents of all of the waste at the facility.

The location of the barrier wall is shown on Drawings C101 and C102 in Appendix B-1 of Section B of this application. Structural information on the barrier wall is provided in Drawing S111 in Appendix D-1 of this section.

The barrier wall encloses the active areas of the plant where hazardous waste is treated or stored. The security fence will be on top of the barriers wall. The height of the barrier wall will vary depending on the contours of the land, but the height of the security fence will be 8 feet above grade, regardless of the height of the barrier wall.

For stormwater purposes, the developed area of the property, those areas that are not within secondary containment, will be sloped and graded to a drainage conduit and then to an infiltration basin. A shut-off gate will be installed at the exit of the infiltration basin so that the opening can be closed, as needed, to prevent/minimize water or a catastrophic spill (i.e., a spill that has breached a secondary containment structure) from leaving the site.

APPENDIX D-1

DRAWINGS

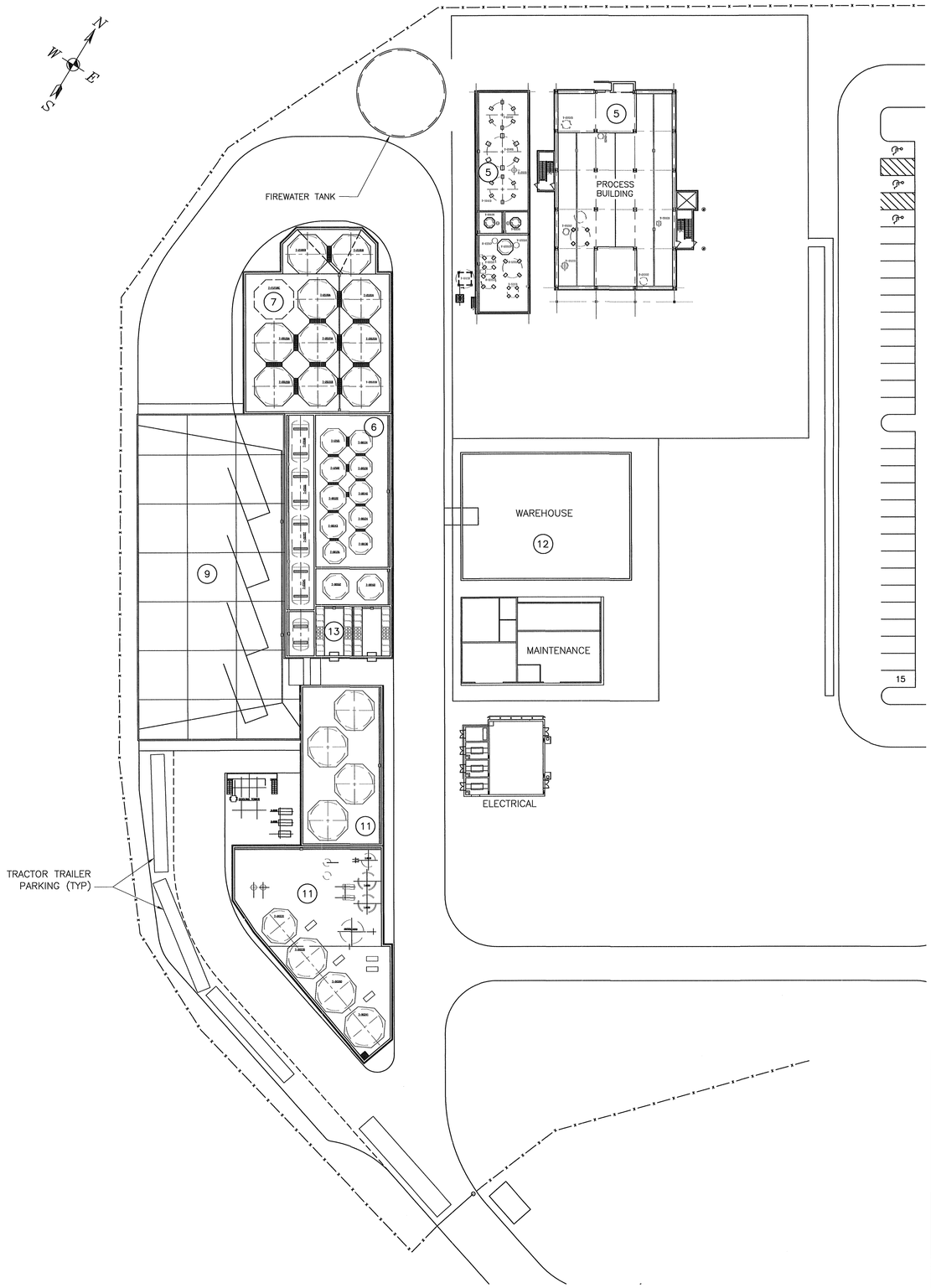


OVERALL PLAN

SCALE: 1"=30'-0"

## ABBREVIATIONS

| | |
|---|---|
| ASTM | AMERICAN SOCIETY OF TESTING AND MATERIALS |
| ACI | AMERICAN CONCRETE INSTITUTE |
| AISC | AMERICAN INSTITUTE OF STEEL CONSTRUCTION |
| ASCE | AMERICAN SOCIETY OF CIVIL ENGINEERS |
| AWS | AMERICAN WELDING SOCIETY |
| IBC | INTERNATIONAL BUILDING CODE |
| ADDN | ADDITIONAL |
| BJF | BITUMINOUS JOINT FILLER |
| BOT | BOTTOM |
| CLR | CLEAR |
| CM | COMPRESSIBLE MATERIAL |
| CMU | CONCRETE MASONRY UNIT |
| DGA | DENSE GRADED AGGREGATE |
| DFT | DRY FILM THICKNESS |
| DWLS | DOWELS |
| E | EXISTING |
| EF | EACH FACE |
| EJ | EXPANSION JOINT |
| EL | ELEVATION |
| EOR | ENGINEER OF RECORD |
| EWEF | EACH WAY EACH FACE |
| FTG | FOOTING |
| FS | FAR SIDE |
| GR | GRADE |
| HP | HIGH POINT |
| LF | LINEAR FEET |
| LL | LIVE LOAD |
| LLH | LONG LEG HORIZONTAL |
| LP | LOW POINT |
| MAX | MAXIMUM |
| MIL | 1/1000 INCHES |
| MIN | MINIMUM |
| N | NEW |
| NS | NEAR SIDE |
| O.C. | ON CENTER |
| PL | PLATE |
| PSF | POUNDS PER SQUARE FOOT |
| REF | REFERENCE |
| T/ | TOP |
| T&B | TOP AND BOTTOM |
| TOC | TOP OF CONCRETE |
| TYP | TYPICAL |
| UN | UNLESS NOTED |

## IBC CHAPTER 17 INSPECTION REQUIREMENTS

1. IBC INSPECTION REQUIREMENTS WILL BE PERFORMED BY THE EOR AND THE OWNER'S ITA. (P)=PERIODIC INSPECTION; (C)=CONTINUOUS INSPECTION, AS DEFINED BY IBC.

CONCRETE CONSTRUCTION

| | VERIFICATION AND INSPECTION | TYPE OF INSPECTION (C) OR (P) | INSPECTION REQUIREMENTS | RESPONSIBLE AGENCY |
|---|---|---|---|---|
| 1 | REINFORCING STEEL PLACEMENT | P | PRIOR TO CONC. PLACEMENT | ITA |
| 2 | BOLTS & OTHER EMBEDMENTS | C | PRIOR TO CONC. | ITA |
| 3 | CONCRETE DESIGN MIX | C | SEE NOTES BELOW | EOR (VENDOR SUBMITTALS); ITA (TRUCK DELIVERY TICKETS) |
| 4 | CONCRETE SAMPLING | P | SEE NOTES BELOW | ITA |
| 5 | CONCRETE PLACEMENT | C | EACH PLACEMENT | ITA |
| 6 | MAINTENANCE OF CURING & TEMPERATURE REQUIREMENTS | P | VERIFY CURING & HOT/COLD WEATHER CURING REQUIREMENTS | ITA |

CONCRETE

1. CONCRETE TESTING WILL BE PERFORMED BY AN INDEPENDENT TESTING AGENCY (ITA) HIRED BY THE OWNER. THE ITA SHALL PERFORM THE FOLLOWING SERVICES:
   a. MOLD AND CURE TEST SPECIMENTS IN ACCORDANCE WITH ASTM C31. MAKE AT LEAST ONE SET OF SPECIMENS AND ONE STRENGTH TEST FOR EACH 100 CY, OR FRACTION THEREOF, OF CONCRETE PLACED IN A SINGLE DAY.
   b. PERFORM ONE SLUMP TEST, ONE ENTRAINED AIR TEST, AND CHECK THE TEMPERATURE OF THE CONCRETE FOR EACH TEST SET.
   c. MOLD 6"ø SPECIMENS FOR EACH TEST SET.
   d. TESTING SHALL INCLUDE:
      –TWO SPECIMENS AT 7 DAYS FOR INFORMATION
      –TWO SPECIMENS AT 28 DAYS.

   THE AVERAGE VALUE OF THE 28 DAY TESTS WILL BE THE BASIS FOR FINAL ACCEPTANCE.
2. SUBMITTALS:
   a. CONCRETE MIX DESIGNS
   b. REINFORCING SHOP DRAWINGS AND MILL CERTIFICATIONS
   c. ADMIXTURES PRODUCT AND RECOMMENDED DOSE RATES
   d. CONCRETE TEST RESULTS.

| AREA NO | DESCRIPTION | DWG NO |
|---|---|---|
| 5 | PLAN - PROCESS BUILDING MAT | S102A |
| - | PLAN - PROCESS BUILDING +16'-5" | S102B |
| - | PLAN - PROCESS BUILDING +31'-2" | S102C |
| - | PLAN - PROCESS BUILDING +45'-11" | S102D |
| - | ELEVATION - PROCESS BUILDING - EAST | S102E |
| 7 | FOUNDATION & CONTAINMENT PLAN | S103 |
| 6 | FOUNDATION & CONTAINMENT PLAN | S104 |
| 9 | FOUNDATION & CONTAINMENT PLAN | S105 |
| 13 | FOUNDATION & CONTAINMENT PLAN | S106 |
| 11 | FOUNDATION & CONTAINMENT PLAN | S107 |
| 11 | FOUNDATION & CONTAINMENT PLAN | S108 |
| 12 | WAREHOUSE FOUNDATION PLAN | S109 |
| | TYPICAL STRUCTURAL DETAILS | S110 |
| | | |

## BUILDING CODES NOTES & SPECIFICATIONS

1. CONTAINMENT DESIGNS ARE BASED ON THE REQUIREMENTS OF THE UNIFORM CONSTRUCTION CODE OF THE COMMONWEALTH OF PENNSYLVANIA (THE INTERNATIONAL BUILDING CODE, 2009 EDITION, AND ASCE 7–05).

2. SNOW LOADS
   A. GROUND SNOW LOAD — 30 PSF
   B. DESIGN COEFFICIENTS: — Ct = 1.0, Ce = 0.9; I=1.0
   C. FLAT ROOF SNOW LOAD — 20 PSF
   D. SNOW DRIFTS ON LOW ROOFS PER ASCE 7

3. WIND LOAD
   A. BASIC WIND SPEED — 95 MPH
   B. IMPORTANCE FACTOR — 1.0
   C. EXPOSURE CATEGORY — C

4. SEISMIC DESIGN DATA
   A. OCCUPANCY CATEGORY — II
   B. IMPORTANCE FACTOR — 1.0
   C. Sds — 0.30g
   D. Sd1 — 0.10g
   E. SOIL CLASS — D
   F. SEISMIC DESIGN CATEGORY — B
   G. ANALYSIS PROCEDURE: — EQUIVALENT LATERAL FORCE
   H. CONTAINMENT SEISMIC FORCE–RESISTING SYSTEM: — ORDINARY REINFORCED CONCRETE SHEAR WALLS, R = 4.0; Cd = 4.0

5. FLOOD DATA:
   A. 100 YEAR FLOOD ELEVATION — EL. 16.75
   B. 500 YEAR FLOOD ELEVATION — EL. 22.0

6. FOUNDATION REQUIREMENTS ARE BASED ON "REPORT OF GEOTECHNICAL STUDY FOR ELCON RECYCLING FACILITY, FALLS TOWNSHIP, BUCKS COUNTY, PENNSYLVANIA", PREPARED BY GILMORE AND ASSOCIATES 65E BUTLER AVE., NEW BRITAIN, PA, 18901, DATED MAY 26, 2016.

7. REINFORCED CONCRETE DESIGN IS BASED ON ACI 318–08, "BUILDING CODE REQUIREMENTS FOR STRUCTURAL CONCRETE," USING THE STRENGTH DESIGN METHOD.

8. REINFORCED CONCRETE INSTALLATION SHALL CONFORM TO ALL REQUIREMENTS OF ACI 301–05, "SPECIFICATIONS FOR STRUCTURAL CONCRETE," WITH THE FOLLOWING PROVISIONS:
   A. CONCRETE STRENGTH @ 28 DAYS: — 4500 PSI
   B. CEMENT: — ASTM C150, TYPE I OR II
   C. AIR ENTRAINMENT: — ACI 318, TABLE 4.4.1 FOR "EXPOSURE CLASS F2"
   D. REINFORCING BARS: — ASTM A615, GRADE 60
   E. WATER STOPS: — SIKA HYDROTITE CJ–0725, GREENSTREAK GROUP, ST LOUIS, MO
   F. VAPOR BARRIER: — GRIFFOLYN TYPE 105, REEF INDUSTRIES, HOUSTON, TX
   G. CONTROL JOINT SEALANT: — SIKAFLEX–Ia, SIKA CORPORATION, LYNDHURST, NJ
   H. ALL CONCRETE TO RECEIVE TWO COATS CURING & SEALING AND HARDENING TREATMENT, EVERCLEAR VOX, EUCLID CORP, CLEVELAND, OH.

9. PRECAST CONCRETE TRENCH DRAINS AND SUMPS
   A. PRECAST CONCRETE TRENCH DRAINS SHALL BE PRE–SLOPED, 6 INCH WIDE POLYMER CONCRETE (POLYESTER OR VINYL ESTER) SERIES 9814, AS SUPPLIED BY JAY R. SMITH MFG CO., MONTGOMERY, AL
   B. PROVIDE A COMPLETE SYSTEM WITH A UNIFORM SLOPE. USE THE MINIMUM DEPTH CHANNEL AT THE HIGH POINT OF EACH TRENCH. PROVIDE STANDARD SLOPED UNITS TO THE PRECAST CATCH BASINS. PROVIDE UNIVERSAL END CAPS AT EACH HIGH POINT.
   C. CATCH BASIN: MODULAR SECTIONS, 9864–TM–TOP, 9868–BS BOTTOM.
   D. SUPPLY VINYLESTER FRP GRATES FOR TRENCHES AND CATCH BASIN, PROOF LOAD 150 PSI.
   E. SEALANT: ACO BOND–V.

10. FRP STRUCTURAL SECTIONS: EXTRUDED SHAPES, EXTREN, SERIES 625, AS MANUFACTURED BY STRONGWELL CORPORATION, BRISTOL, VA.

11. FRP GRATING: DURAGRATE, MOLDED FIBERGLASS GRATING, VE (VINYL ESTER), AS SUPPLIED BY STRONGWELL CORPORATION, BRISTOL, VA.

12. PROTECTIVE COATINGS
   A. CONTAINMENTS MATS, PADS, AND WALLS WILL BE PROTECTED BY ONE OF THE FOLLOWING SYSTEMS (SUPPLIED BY CARBOLINE, ST. LOUIS, MO, OR APPROVED SUBSTITUTE.) SYSTEM SELECTION WILL BE BASED ON THE EXPECTED CHEMICAL EXPOSURES:

      SANITILE 944SL (100% SOLIDS, EPOXY, GOOD CHEMICAL RESISTANCE, FORKLIFT TRAFFIC)

      SEMSTONE 140 (100% SOLIDS, HIGH PERFORMANCE EPOXY LINING SYSTEM FOR CONCRETE)

      SEMSTONE 145 (100% SOLIDS, HIGH PERFORMANCE NOVOLAC EPOXY LINING SYSTEM FOR CONCRETE)

      SEMSTONE 870 AFRC (HIGH PERFORMANCE, VINYL ESTER LINING SYSTEM)

      SEMSTONE 245 (100% SOLIDS, HIGH PERFORMANCE NOVOLAC EPOXY LINING SYSTEM FOR CONCRETE)

   B. PRECAST TRENCH DRAINS AND SUMPS NEED NOT BE COATED, UNLESS INDICATED.

CONTAINMENT DESIGN CRITERIA

1. CONTAINMENT VOLUMES AND DETAILS ARE BASED ON THE REQUIREMENTS OF 40 CODE OF FEDERAL REGULATIONS (CFR) AND THE PA DEPARTMENT OF ENVIRONMENTAL PROTECTION REGULATIONS.
2. CONTAINMENT VOLUME (40 CFR 264.175).
   A. EACH CONTAINMENT AREA IS DESIGNED TO HOLD 10 PERCENT OF THE TOTAL VOLUME OF ALL CONTAINERS, OR 100 PERCENT OF THE VOLUME OF THE LARGEST CONTAINER.
   B. IN ADDITION, ALL CONTAINMENTS EXPOSED TO THE WEATHER INCLUDE STORAGE VOLUME FOR A 25 YEAR STORM (6.25 INCHES OF WATER IN 24 HOURS).
   C. TOP OF WALL, WHERE SHOWN, IS A MINIMUM. HIGHER WALLS MAY BE USED IN THE FINAL DESIGN.
   D. ALL CONTAINMENT FLOORS ARE SLOPED TO A TRENCH DRAIN AND SUMP COLLECTION SYSTEM.
   E. PROCESS BUILDING CONTAINMENT DESIGN IS BASED ON THE VOLUME OF THE LARGEST TANK IN THE BUILDING PLUS 20 MINUTES OF SPRINKLER DISCHARGE.
   F. ALL CONTAINMENTS ARE EQUIPPED WITH AT LEAST ONE SUMP PUMP, WITH A MINIMUM CAPACITY OF 50 GALLONS PER MINUTE (GPM). ALL WORST–CASE SPILLS CAN BE REMOVED IN LESS THAN 24 HOURS.
3. STRUCTURAL DESIGN:
   A. CONTAINMENT WALLS AND MATS ARE DESIGNED FOR STORAGE OF LIQUIDS UP TO THE HEIGHT OF THE WALL, WHICH MAY BE HIGHER THAN REQUIRED FOR SPILL CONTAINMENT.
   B. WALL AND MAT THICKNESSES AND REINFORCING SHOWN ARE MINIMUMS FOR CONTAINMENT DESIGN. ADDITIONAL THICKNESS OR REINFORCING MAY BE REQUIRED FOR OTHER LOADING REQUIREMENTS.

**PRELIMINARY**
**NOT FOR CONSTRUCTION**


IES ENGINEERS — ENGINEERING FOR INDUSTRY
1720 WALTON ROAD, BLUE BELL, PA 19422
PHONE: (610) 828–3078, FAX: (610) 828–7842


| REV. | DATE | DESCRIPTION | BY | APP |
|---|---|---|---|---|
| A | 09–06–16 | CLIENT REVIEW | | |
| B | 01–13–17 | CLIENT REVIEW | | |

NOTE:
THE CONTRACTOR SHALL FIELD VERIFY ALL DIMENSIONS AND EXISTING CONDITIONS PRIOR TO PROCEEDING WITH ANY WORK. WHERE DISCREPANCIES OCCUR BETWEEN THESE DOCUMENTS AND EXISTING CONDITIONS, THE DISCREPANCY SHALL BE REPORTED TO THE OWNER AND/OR ENGINEER FOR EXPEDITING AND RESOLUTION.

CLIENT
ELCON RECYCLING FACILITY
FALLS TOWNSHIP, BUCKS COUNTY, PA

PROJECT TITLE
UNLOADING STATION & TANK CONTAINMENT

DRAWING TITLE
FOUNDATION KEY PLAN & CODE NOTES

| | | |
|---|---|---|
| LAST UPDATE 01–06–17 | ENGINEER AP | IES CONTRACT No. EG151065.03 |
| DATE 02–09–16 | DESIGNER MWM | CADD FILE No. 106503S101–111 |
| SCALE 1"=20'–0" | DRAWN BKA | XREF FILE(S) – |

RECORDS CONTROL

ALBERT P. POPOLI — COMMONWEALTH OF PENNSYLVANIA — REGISTERED PROFESSIONAL ENGINEER
P.A.P.E. NO. 35446

DRAWING NUMBER
S101

REVISION LEVEL
B

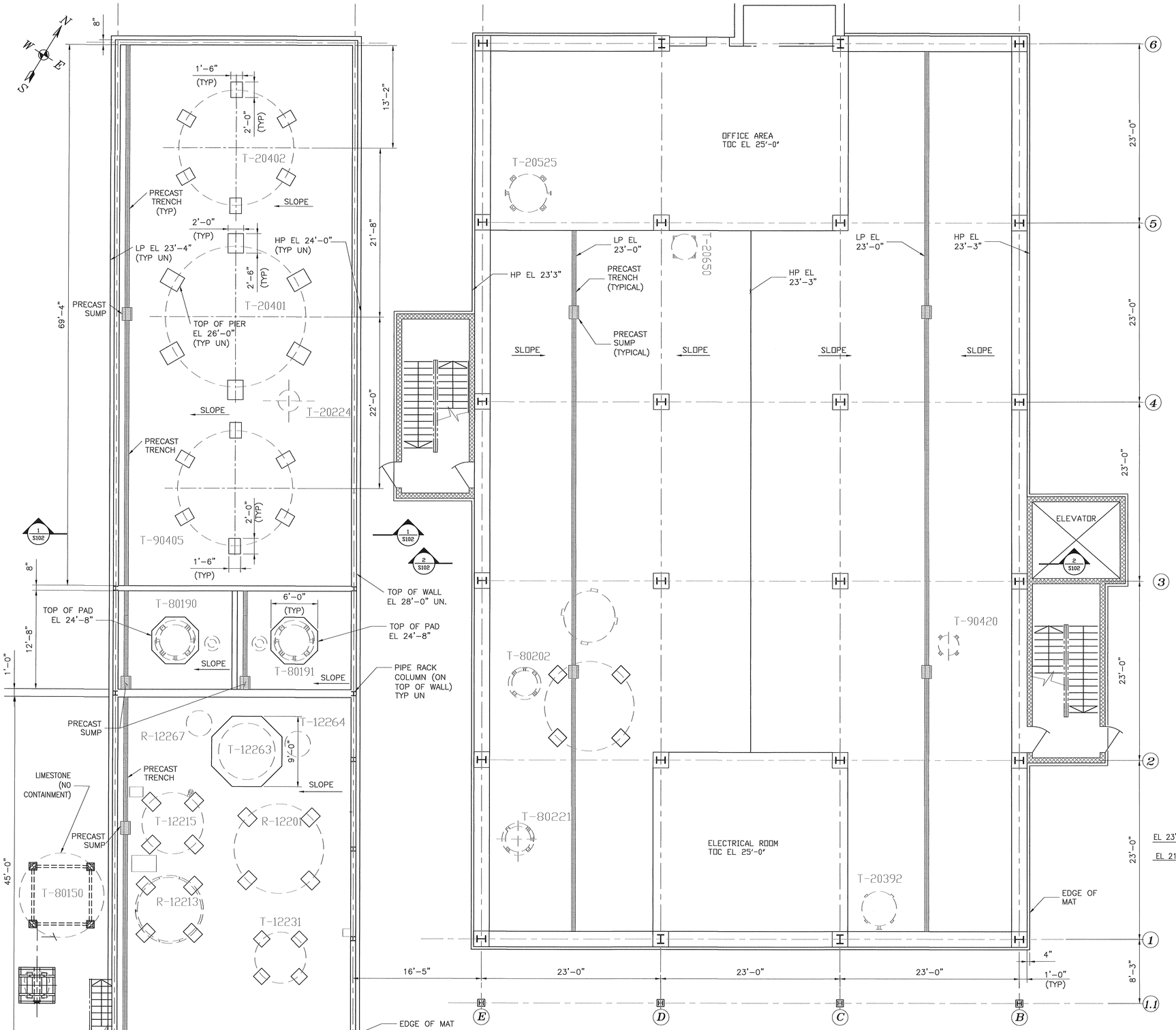


2 S102A PLAN – AREA 5 & BUILDING
SCALE: 3/16"=1'-0"
3/16" 0 1 2 4 8 12

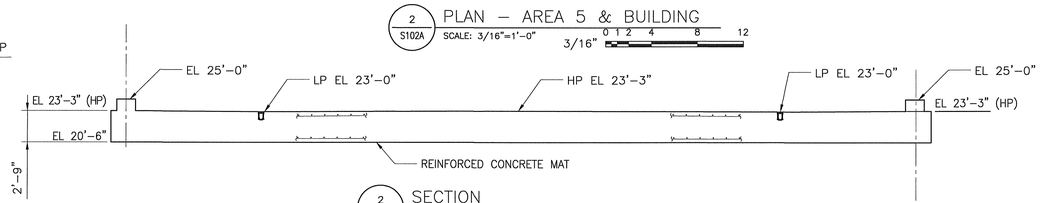


2 S102A SECTION
SCALE: 3/16"=1'-0"
3/16" 0 1 2 4 8 12

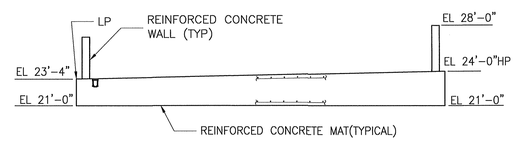


1 S102A SECTION
SCALE: 3/16"=1'-0"
3/16" 0 1 2 4 8 12

NOTES:

1. CODE NOTES DWG S101
2. CONTAINMENT WALL HEIGHT IN AREA 5 BASED ON LARGEST TANK IN EACH SECTION, PLUS RAINWATER FROM 25 YEAR STORM.
3. PROCESS BUILDING CONTAINMENT BASED ON A SPILL OF THE LARGEST TANK IN THE BUILDING PLUS 20 MINUTES OF FIRE SUPPRESSION SYSTEM DISCHARGE (50,000 gal.). ALL ABOVE-GRADE FLOOR AREAS DRAIN TO THE GROUND FLOOR CONTAINMENT.

**PRELIMINARY**
**NOT FOR CONSTRUCTION**


IES ENGINEERS
ENGINEERING FOR INDUSTRY
1720 WALTON ROAD
PHONE: (610) 828-3078
BLUE BELL, PA 19422
FAX: (610) 828-7842


| REV. | DATE | DESCRIPTION | BY | APP |
|---|---|---|---|---|
| A | 09-06-16 | CLIENT REVIEW | | |
| B | 01-13-17 | CLIENT REVIEW | | |

NOTE:
THE CONTRACTOR SHALL FIELD VERIFY ALL DIMENSIONS AND EXISTING CONDITIONS PRIOR TO PROCEEDING WITH ANY WORK. WHERE DISCREPANCIES OCCUR BETWEEN THESE DOCUMENTS AND EXISTING CONDITIONS, THE DISCREPANCY SHALL BE REPORTED TO THE OWNER AND/OR ENGINEER FOR EXPEDITING AND RESOLUTION.

CLIENT
ELCON RECYCLING FACILITY
FALLS TOWNSHIP, BUCKS COUNTY, PA

PROJECT TITLE
UNLOADING STATION & TANK CONTAINMENT

DRAWING TITLE
PLAN – AREA 5 & PROCESS BUILDING MAT

| LAST UPDATE | ENGINEER | IES CONTRACT No. |
|---|---|---|
| 01-05-17 | AP | EG151065.03 |
| DATE | DESIGNER | CADD FILE No. |
| 02-09-16 | BKA | 106503S101-111 |
| SCALE | DRAWN | XREF FILE(S) |
| 3/16"=1'-0" | BKA | – |

RECORDS CONTROL

ALBERT P. POPOLI
REGISTERED PROFESSIONAL ENGINEER
PA P.E. NO. 35446

DRAWING NUMBER
S102A

REVISION LEVEL
B

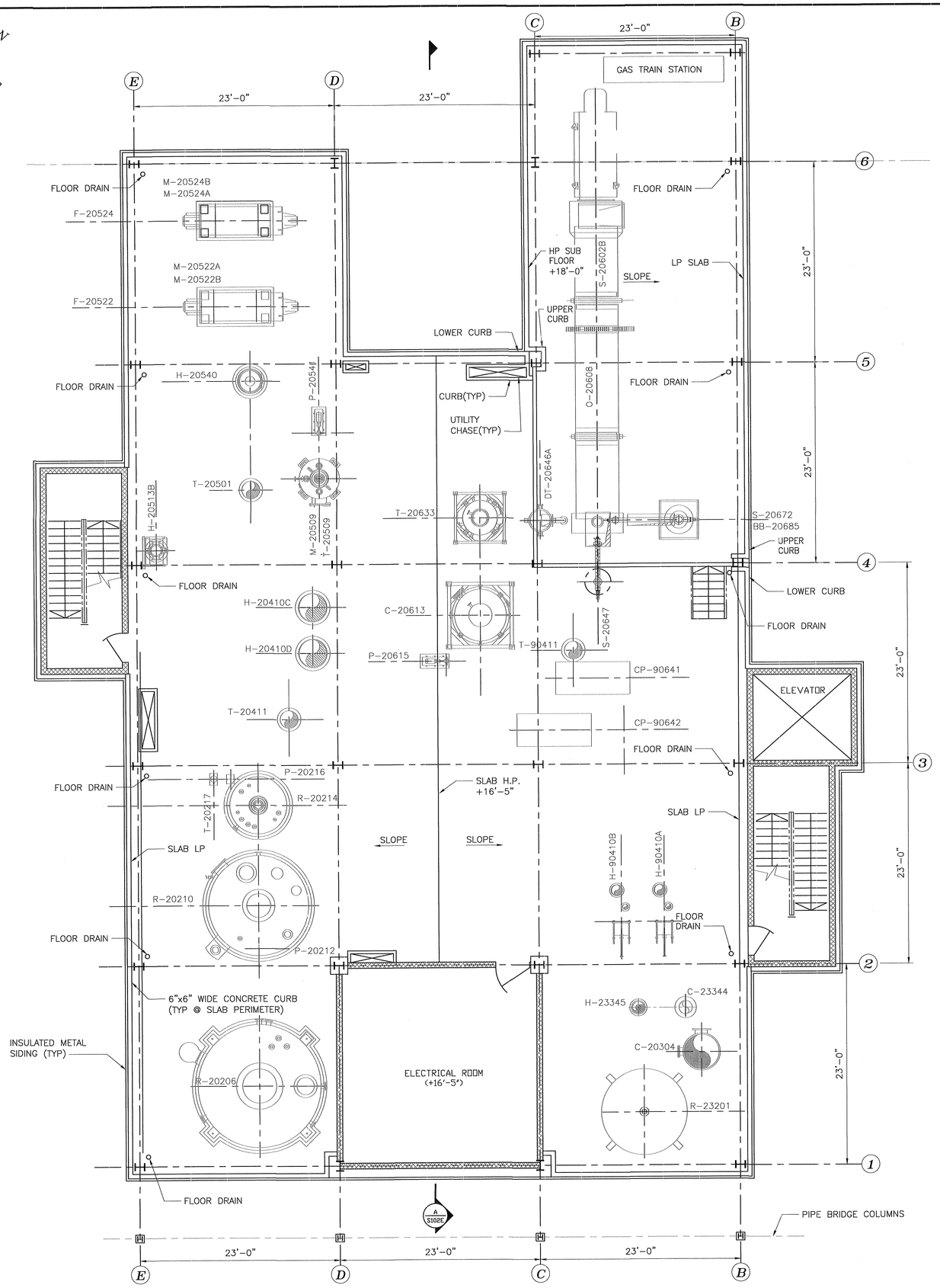


1 S102B PROCESS BUILDING PLAN +16'-5" ELEV.(UN)

SCALE: 3/16"=1'-0"

NOTES:

1. CODE NOTES DWG S101
2. FLOOR DRAINS PIPED TO GROUND FLOOR CONTAINMENT.

PRELIMINARY
NOT FOR CONSTRUCTION


IES ENGINEERS
ENGINEERING FOR INDUSTRY
1720 WALTON ROAD
PHONE: (610) 828-3078
BLUE BELL, PA 19422
FAX: (610) 828-7842


| REV. | DATE | DESCRIPTION | BY | APP |
|---|---|---|---|---|
| A | 09-06-16 | CLIENT REVIEW | | |
| B | 01-13-17 | CLIENT REVIEW | | |

NOTE:
THE CONTRACTOR SHALL FIELD VERIFY ALL DIMENSIONS AND EXISTING CONDITIONS PRIOR TO PROCEEDING WITH ANY WORK. WHERE DISCREPANCIES OCCUR BETWEEN THESE DOCUMENTS AND EXISTING CONDITIONS, THE DISCREPANCY SHALL BE REPORTED TO THE OWNER AND/OR ENGINEER FOR EXPEDITING AND RESOLUTION.

CLIENT
ELCON RECYCLING FACILITY
FALLS TOWNSHIP, BUCKS COUNTY, PA

PROJECT TITLE
UNLOADING STATION & TANK CONTAINMENT

DRAWING TITLE
PROCESS BUILDING PLAN +16'-5"

| | | |
|---|---|---|
| LAST UPDATE 01-05-17 | ENGINEER AP | IES CONTRACT No. EG151065.03 |
| DATE 08-01-16 | DESIGNER BKA | CADD FILE No. 106503S101-111 |
| SCALE 3/16"=1'-0" | DRAWN BKA | XREF FILE(S) – |

RECORDS CONTROL

ALBERT P. POPOLI
REGISTERED PROFESSIONAL ENGINEER
PA.P.E. NO. 35446

DRAWING NUMBER
S102B

REVISION LEVEL
B

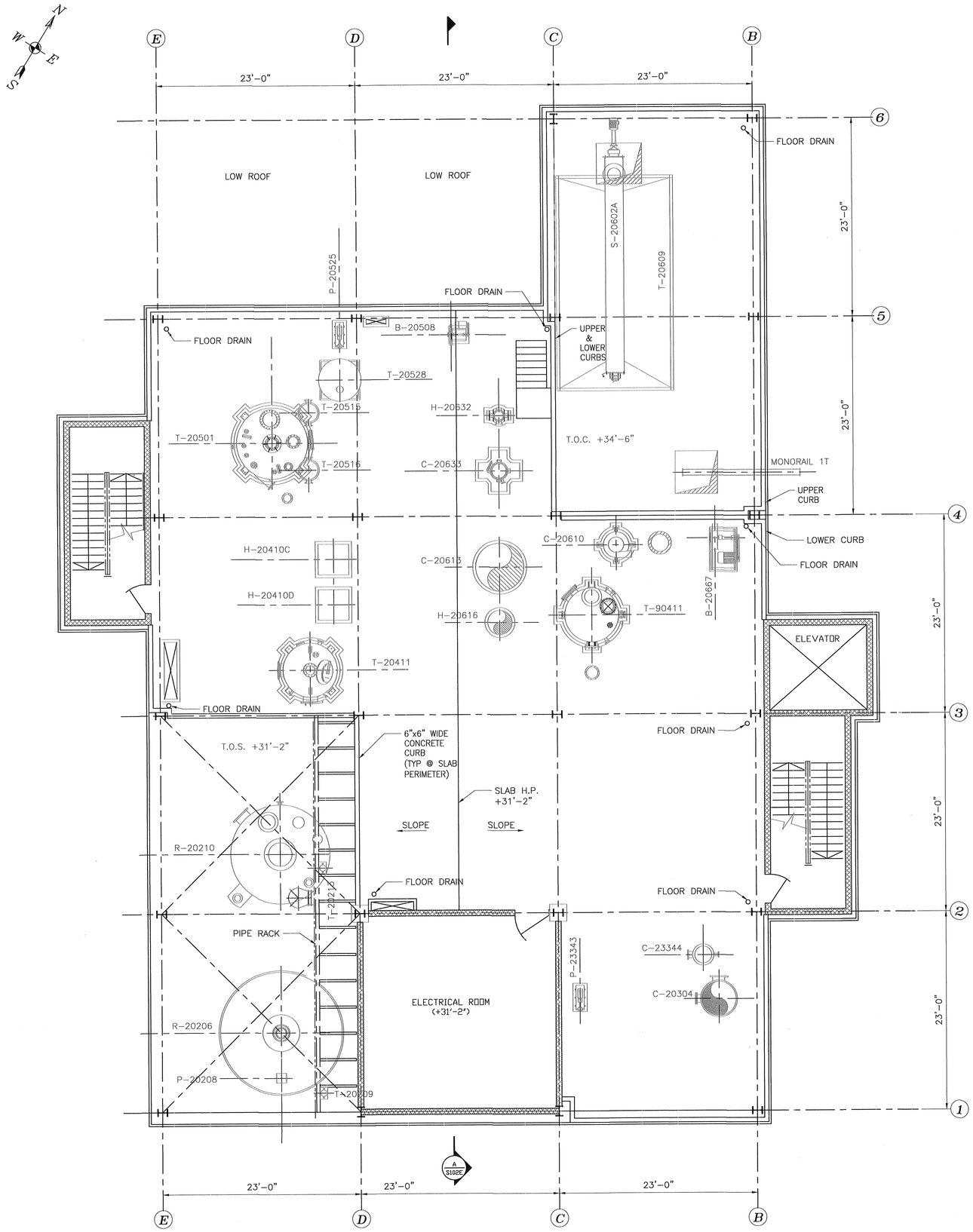


1 S102C PROCESS BUILDING PLAN +31'-2" ELEV.(UN)

SCALE: 3/16"=1'-0" 0 1 2 4 8 12

3/16"

NOTES:

1. CODE NOTES DWG S101
2. FLOOR DRAINS PIPED TO GROUND FLOOR CONTAINMENT.

PRELIMINARY
NOT FOR CONSTRUCTION


ENGINEERS
ENGINEERING FOR INDUSTRY
1720 WALTON ROAD
PHONE: (610) 828-3078
BLUE BELL, PA 19422
FAX: (610) 828-7842


| REV. | DATE | DESCRIPTION | BY | APP |
|---|---|---|---|---|
| A | 09-06-16 | CLIENT REVIEW | | |
| B | 01-13-17 | CLIENT REVIEW | | |

NOTE:
THE CONTRACTOR SHALL FIELD VERIFY ALL DIMENSIONS AND EXISTING CONDITIONS PRIOR TO PROCEEDING WITH ANY WORK. WHERE DISCREPANCIES OCCUR BETWEEN THESE DOCUMENTS AND EXISTING CONDITIONS, THE DISCREPANCY SHALL BE REPORTED TO THE OWNER AND/OR ENGINEER FOR EXPEDITING AND RESOLUTION.

CLIENT
ELCON RECYCLING FACILITY
FALLS TOWNSHIP, BUCKS COUNTY, PA

PROJECT TITLE
UNLOADING STATION & TANK CONTAINMENT

DRAWING TITLE
PROCESS BUILDING PLAN +31'-2"

| LAST UPDATE | ENGINEER | RECORDS CONTROL | IES CONTRACT No. |
|---|---|---|---|
| 01-05-17 | AP | | EG151065.03 |
| DATE | DESIGNER | | CADD FILE No. |
| 08-01-16 | BKA | | 1065035101-111 |
| SCALE | DRAWN | | XREF FILE(S) |
| 3/16"=1'-0" | BKA | | — |

ALBERT P. POPOLI
COMMONWEALTH OF PENNSYLVANIA
REGISTERED PROFESSIONAL ENGINEER
ENGINEER
NO. 35446-E
PA.P.E. NO. 35446

DRAWING NUMBER
S102C

REVISION LEVEL
B

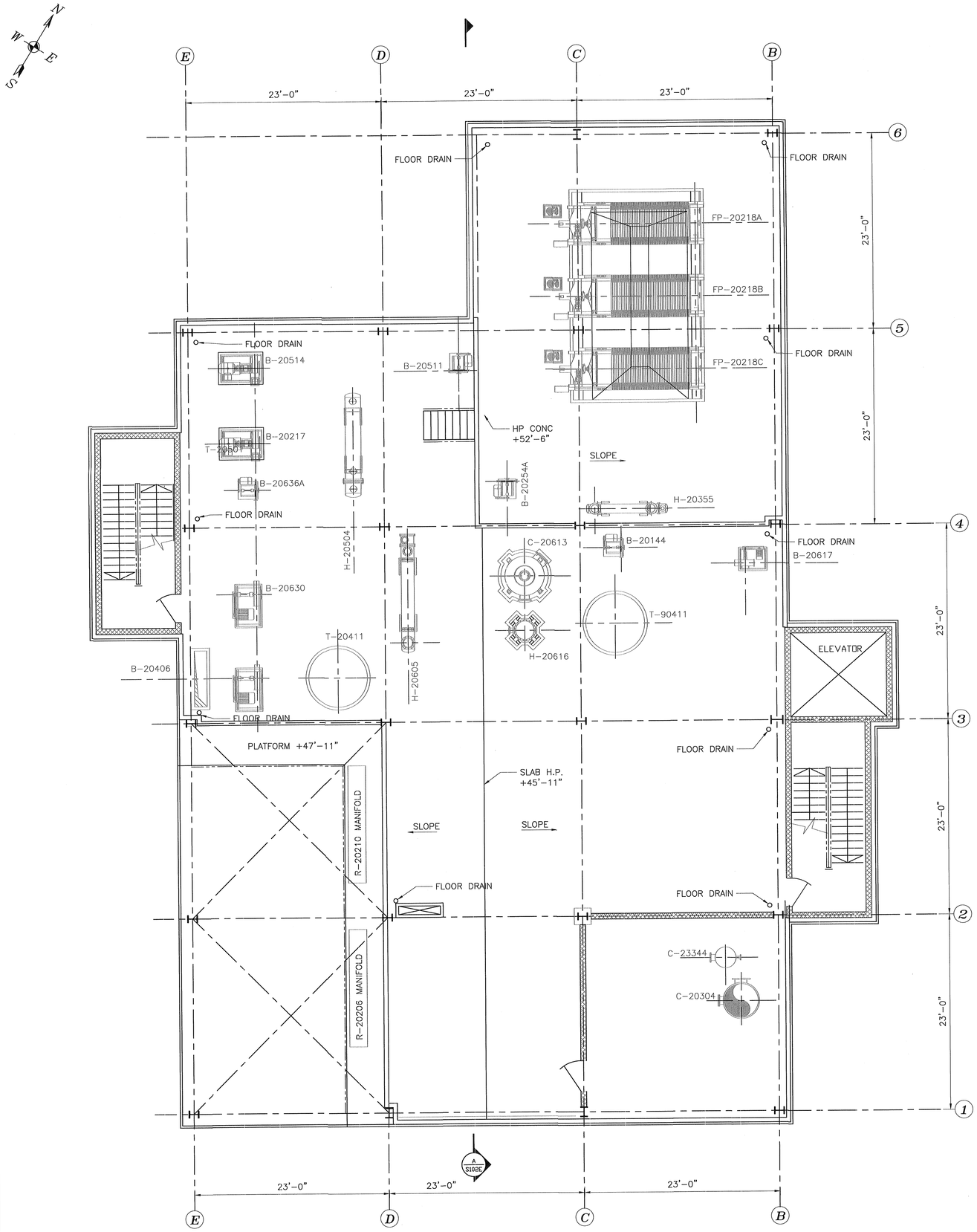


1 / S102D PROCESS BUILDING PLAN +45'-11" ELEV. (UN)
SCALE: 3/16"=1'-0"

NOTES:

1. CODE NOTES DWG S101
2. FLOOR DRAINS PIPED TO GROUND FLOOR CONTAINMENT.

PRELIMINARY
NOT FOR CONSTRUCTION


ENGINEERS
ENGINEERING FOR INDUSTRY
1720 WALTON ROAD
PHONE: (610) 828-3078
BLUE BELL, PA 19422
FAX: (610) 828-7842


| REV. | DATE | DESCRIPTION | BY | APP |
|---|---|---|---|---|
| A | 09-06-16 | CLIENT REVIEW | | |
| B | 01-13-17 | CLIENT REVIEW | | |

NOTE:
THE CONTRACTOR SHALL FIELD VERIFY ALL DIMENSIONS AND EXISTING CONDITIONS PRIOR TO PROCEEDING WITH ANY WORK. WHERE DISCREPANCIES OCCUR BETWEEN THESE DOCUMENTS AND EXISTING CONDITIONS, THE DISCREPANCY SHALL BE REPORTED TO THE OWNER AND/OR ENGINEER FOR EXPEDITING AND RESOLUTION.

CLIENT
ELCON RECYCLING FACILITY
FALLS TOWNSHIP, BUCKS COUNTY, PA

PROJECT TITLE
UNLOADING STATION & TANK CONTAINMENT

DRAWING TITLE
PROCESS BUILDING PLAN +45'-11"

| | | | |
|---|---|---|---|
| LAST UPDATE 01-05-17 | ENGINEER AP | RECORDS CONTROL | IES CONTRACT No. EG151065.03 |
| DATE 08-01-16 | DESIGNER BKA | | CADD FILE No. 106503S101-111 |
| SCALE 3/16"=1'-0" | DRAWN BKA | | XREF FILE(S) — |

ALBERT B. POPOLI
COMMONWEALTH OF PENNSYLVANIA
REGISTERED PROFESSIONAL ENGINEER
PA.P.E. NO. 35446

DRAWING NUMBER
S102D

REVISION LEVEL
B

NOTES:

1. CODE NOTES DWG S101
2. FLOOR DRAINS PIPED TO GROUND FLOOR CONTAINMENT.

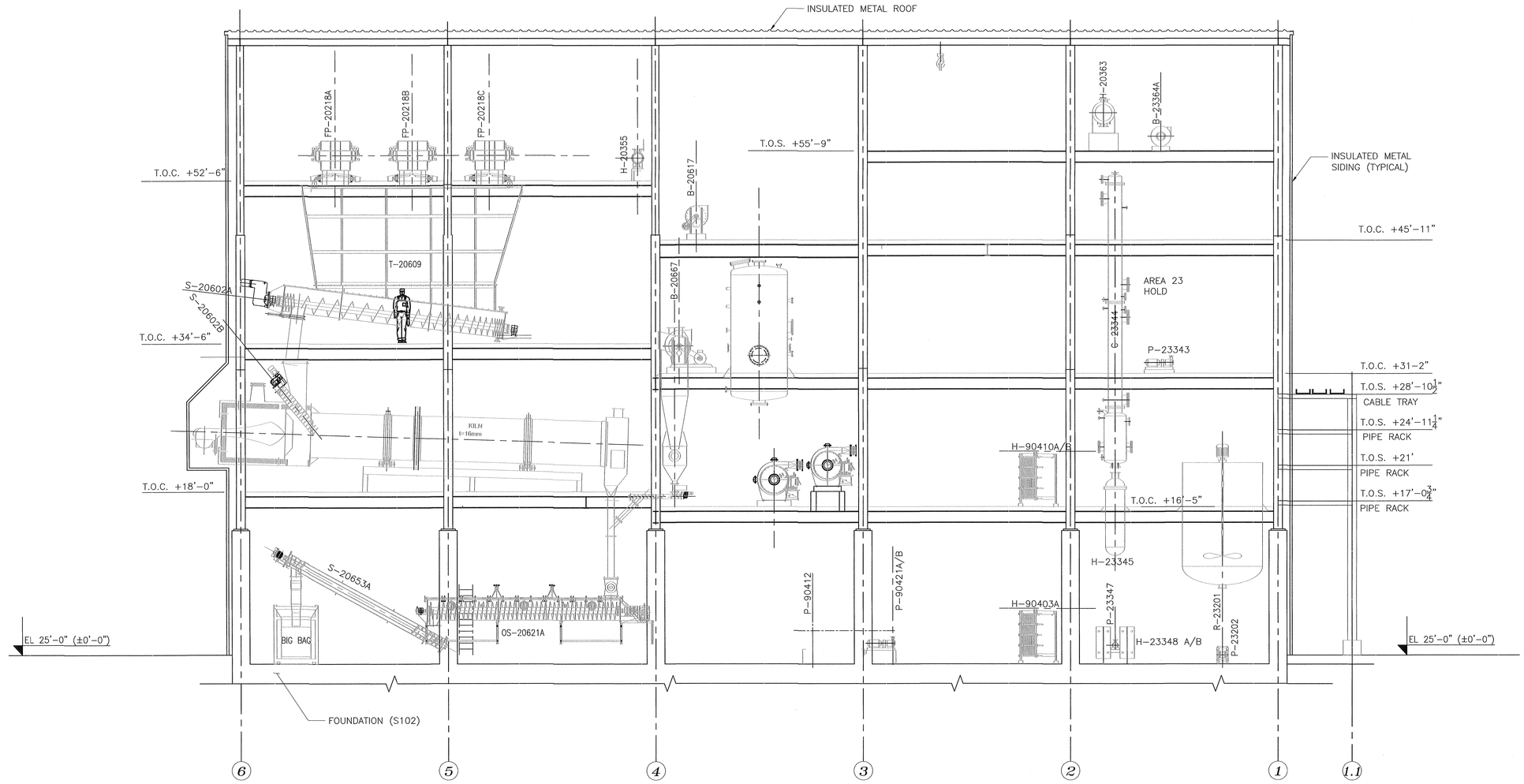


A-A
S102B,C&D
SECTION
SCALE: 3/16"=1'-0"

PRELIMINARY
NOT FOR CONSTRUCTION


IES ENGINEERS
ENGINEERING FOR INDUSTRY
1720 WALTON ROAD
PHONE: (610) 828-3078
BLUE BELL, PA 19422
FAX: (610) 828-7842


| REV. | DATE | DESCRIPTION | BY | APP |
|---|---|---|---|---|
| A | 09-06-16 | CLIENT REVIEW | | |
| B | 01-13-17 | CLIENT REVIEW | | |

NOTE:
THE CONTRACTOR SHALL FIELD VERIFY ALL DIMENSIONS AND EXISTING CONDITIONS PRIOR TO PROCEEDING WITH ANY WORK. WHERE DISCREPANCIES OCCUR BETWEEN THESE DOCUMENTS AND EXISTING CONDITIONS, THE DISCREPANCY SHALL BE REPORTED TO THE OWNER AND/OR ENGINEER FOR EXPEDITING AND RESOLUTION.

CLIENT
ELCON RECYCLING FACILITY
FALLS TOWNSHIP, BUCKS COUNTY, PA

PROJECT TITLE
UNLOADING STATION & TANK CONTAINMENT

DRAWING TITLE
PROCESS BUILDING ELEVATION VIEW EAST

| | | | |
|---|---|---|---|
| LAST UPDATE 01-05-17 | ENGINEER AP | RECORDS CONTROL | IES CONTRACT No. EG151065.03 |
| DATE 08-01-16 | DESIGNER BKA | | CADD FILE No. 106503S101-111 |
| SCALE 3/16"=1'-0" | DRAWN BKA | | XREF FILE(S) — |

ALBERT P. POPOLI
COMMONWEALTH OF PENNSYLVANIA
REGISTERED PROFESSIONAL ENGINEER
ALBERT PETER POPOLI
No. 35446-E
PA.P.E. NO. 35446

DRAWING NUMBER
S102E

REVISION LEVEL
B

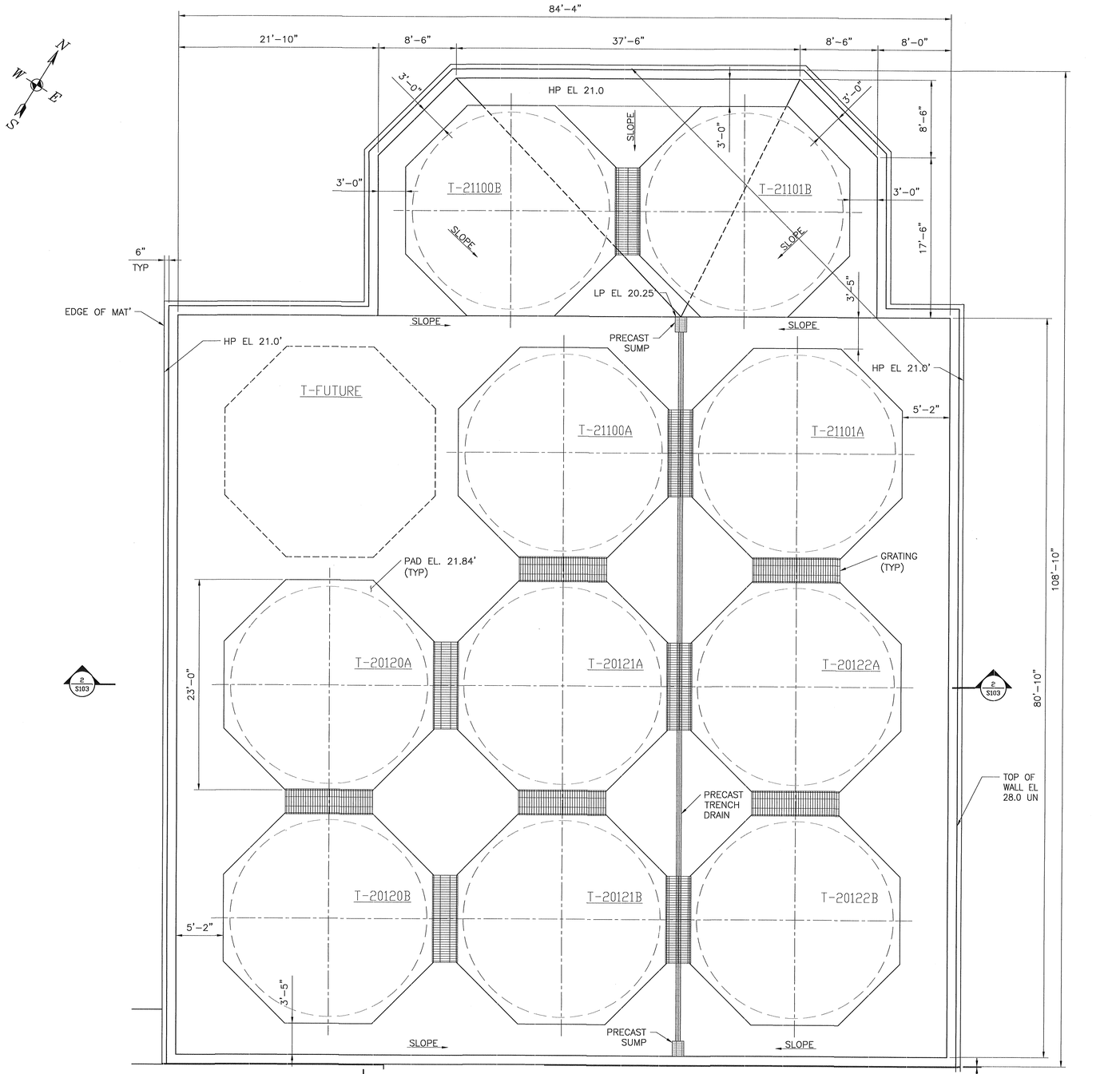


1 S103 PLAN – AREA 7
SCALE: 3/16"=1'-0"
1/8" 0 1 2 4 8

CONTINUED ON S104

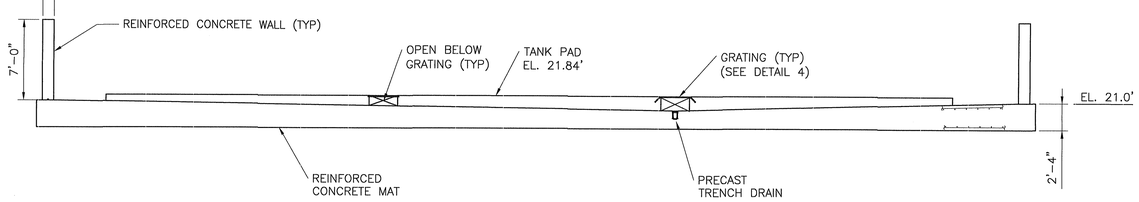


2 S103 SECTION – AREA 7
SCALE: 3/16"=1'-0"
3/16" 0 1 2 4 8 12

NOTES:
1. CODE NOTES DWG S101
2. CONTAINMENT WALL HEIGHT BASED ON SPILL FROM ANY SINGLE TANK, PLUS RAINWATER FROM 25 YEAR STORM.

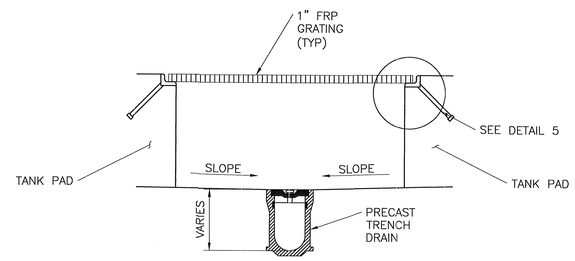


4 S103 GRATING DETAIL
SCALE: 1 1/2"=1'-0"
1½" 0 1 2

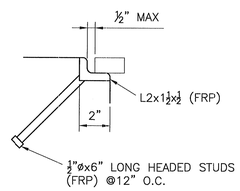


5 S103 GRATING SUPPORT DETAIL
SCALE: 3"=1'-0"
3" 0 0.5 1

**PRELIMINARY**
**NOT FOR CONSTRUCTION**


ENGINEERS
ENGINEERING FOR INDUSTRY
1720 WALTON ROAD
PHONE: (610) 828-3078
BLUE BELL, PA 19422
FAX: (610) 828-7842


| REV. | DATE | DESCRIPTION | BY | APP |
|---|---|---|---|---|
| A | 09-06-16 | CLIENT REVIEW | | |
| B | 01-13-17 | CLIENT REVIEW | | |

NOTE:
THE CONTRACTOR SHALL FIELD VERIFY ALL DIMENSIONS AND EXISTING CONDITIONS PRIOR TO PROCEEDING WITH ANY WORK. WHERE DISCREPANCIES OCCUR BETWEEN THESE DOCUMENTS AND EXISTING CONDITIONS, THE DISCREPANCY SHALL BE REPORTED TO THE OWNER AND/OR ENGINEER FOR EXPEDITING AND RESOLUTION.

CLIENT
ELCON RECYCLING FACILITY
FALLS TOWNSHIP, BUCKS COUNTY, PA

PROJECT TITLE
UNLOADING STATION & TANK CONTAINMENT

DRAWING TITLE
FOUNDATION & CONTAINMENT PLAN – AREA 7

| | | |
|---|---|---|
| LAST UPDATE 01-05-17 | ENGINEER AP | IES CONTRACT No. EG151065.03 |
| DATE 02-09-16 | DESIGNER MWM | CADD FILE No. 106503S101-111 |
| SCALE AS NOTED | DRAWN BKA | XREF FILE(S) — |

RECORDS CONTROL

ALBERT P. POPOLI
COMMONWEALTH OF PENNSYLVANIA
REGISTERED PROFESSIONAL ENGINEER
ALBERT PETER POPOLI
No. 35446
P.A.P.E. NO. 35446

DRAWING NUMBER
S103

REVISION LEVEL
B

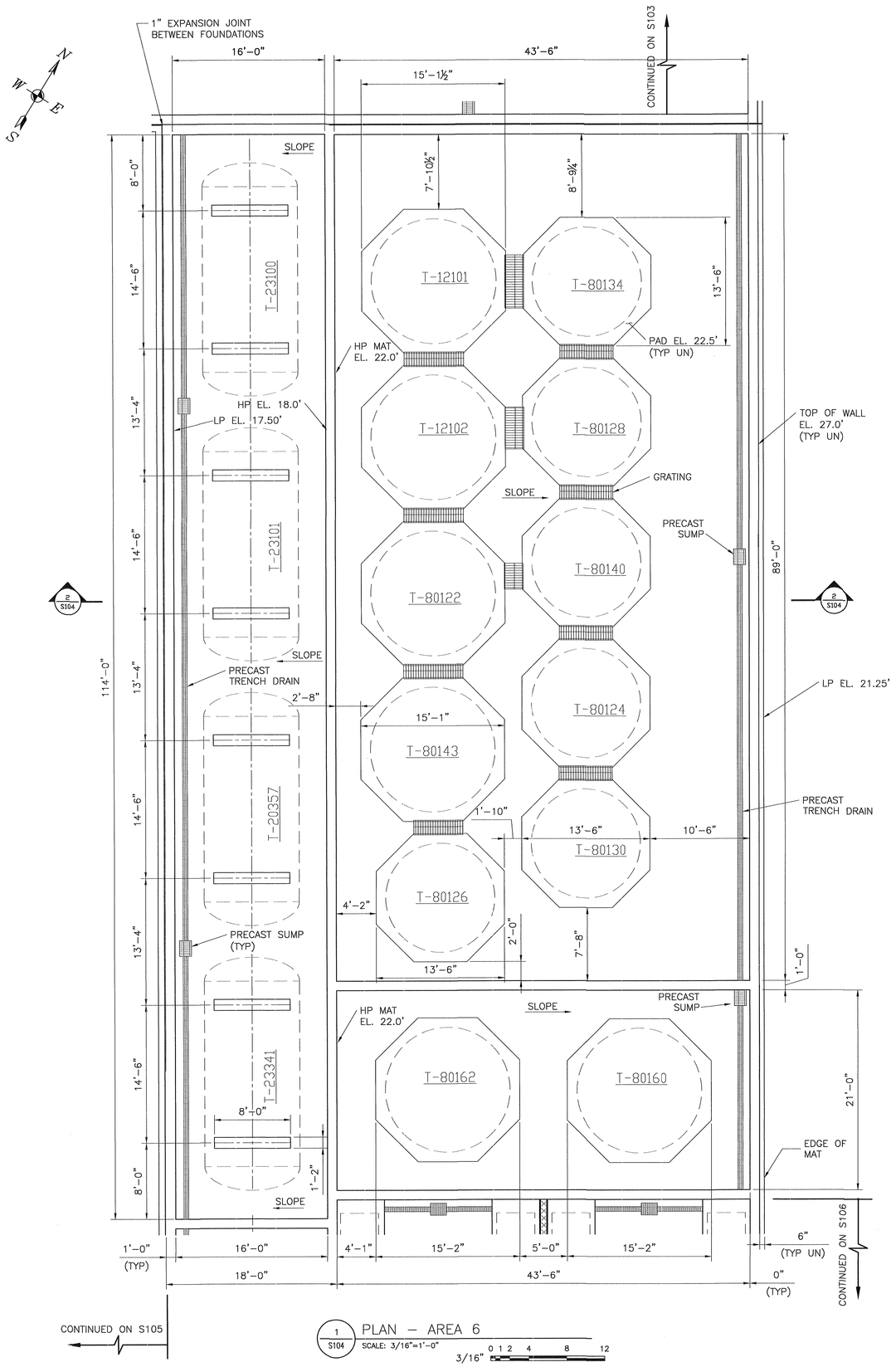


NOTES:
1. CODE NOTES DWG S101
2. CONTAINMENT WALL HEIGHT BASED ON LARGEST TANK IN EACH AREA, PLUS RAINWATER FROM 25 YEAR STORM.

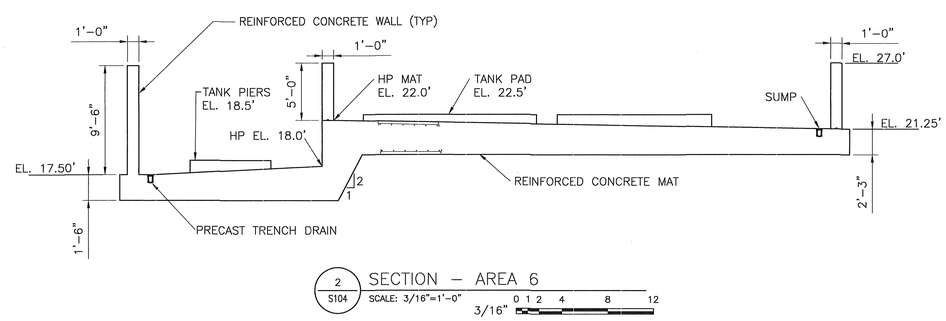


PRELIMINARY
NOT FOR CONSTRUCTION


IES ENGINEERS
ENGINEERING FOR INDUSTRY
1720 WALTON ROAD
PHONE: (610) 828-3078
BLUE BELL, PA 19422
FAX: (610) 828-7842


| REV. | DATE | DESCRIPTION | BY | APP |
|---|---|---|---|---|
| A | 09-06-16 | CLIENT REVIEW | | |
| B | 01-13-17 | CLIENT REVIEW | | |

NOTE:
THE CONTRACTOR SHALL FIELD VERIFY ALL DIMENSIONS AND EXISTING CONDITIONS PRIOR TO PROCEEDING WITH ANY WORK. WHERE DISCREPANCIES OCCUR BETWEEN THESE DOCUMENTS AND EXISTING CONDITIONS, THE DISCREPANCY SHALL BE REPORTED TO THE OWNER AND/OR ENGINEER FOR EXPEDITING AND RESOLUTION.

CLIENT
ELCON RECYCLING FACILITY
FALLS TOWNSHIP, BUCKS COUNTY, PA

PROJECT TITLE
UNLOADING STATION & TANK CONTAINMENT

DRAWING TITLE
FOUNDATION & CONTAINMENT PLAN – AREA 6

| | | |
|---|---|---|
| LAST UPDATE 01-05-17 | ENGINEER AP | IES CONTRACT No. EG151065.03 |
| DATE 02-09-16 | DESIGNER MWM | CADD FILE No. 106503S101-111 |
| SCALE 3/16"=1'-0" | DRAWN BKA | XREF FILE(S) – |

RECORDS CONTROL

ALBERT P. POPOLI
REGISTERED PROFESSIONAL ENGINEER
ALBERT P. POPOLI
PA.P.E. NO. 35446

DRAWING NUMBER
S104

REVISION LEVEL
B

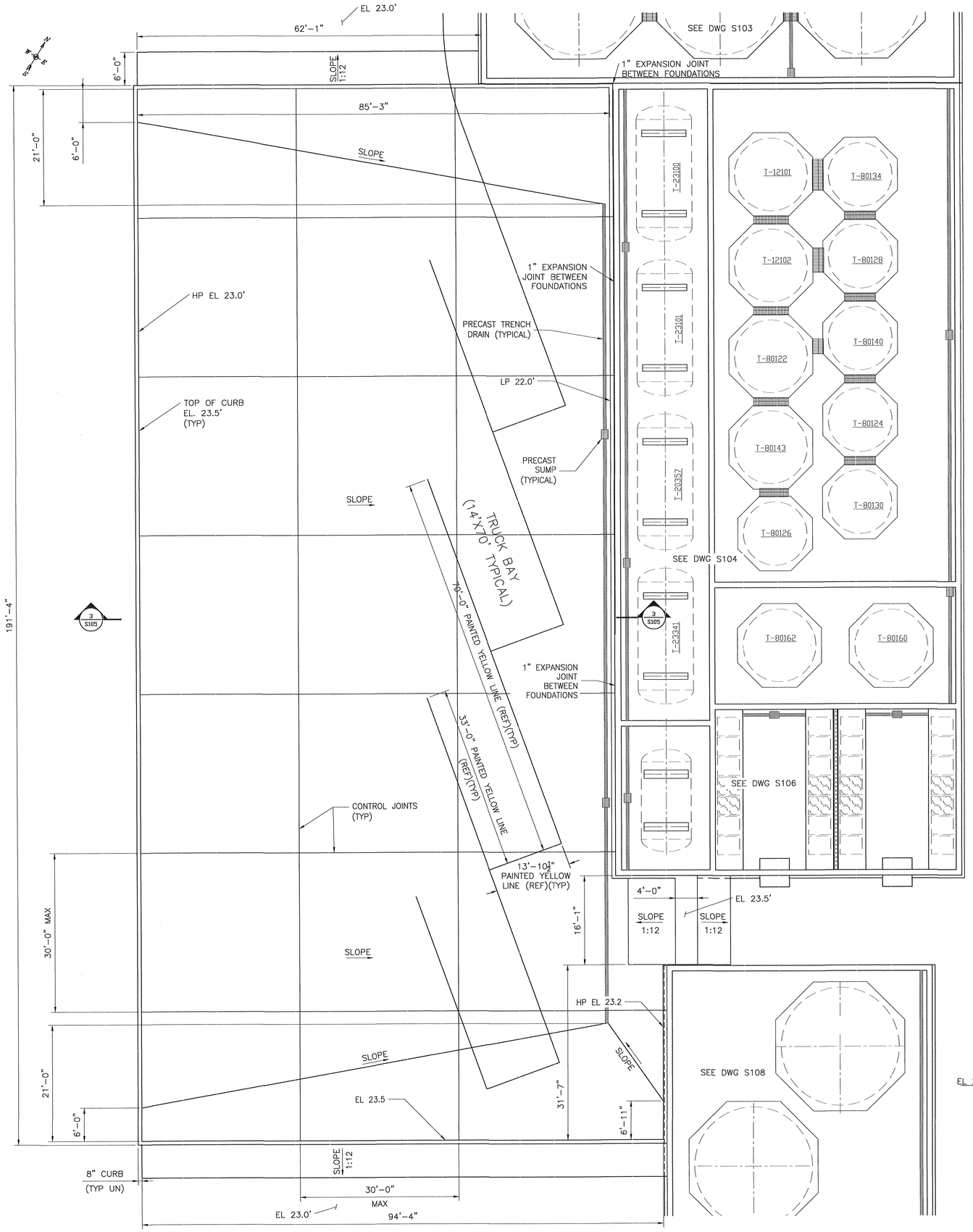


1 / S105 PLAN – AREA 9
SCALE: 1/8"=1'-0"

NOTES:
1. CODE NOTES DWG S101
2. CONTAINMENT SIZED TO STORE 8000 GAL TRUCK SPILL PLUS RAINWATER FROM 25 YEAR STORM.

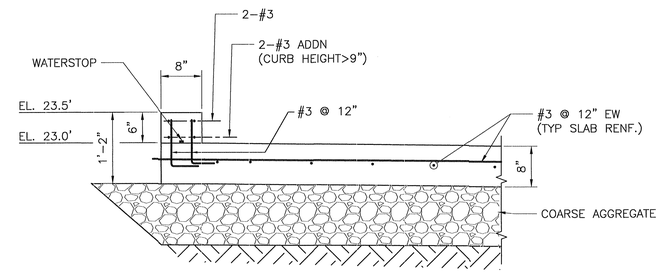


2 / S105 CURB DETAIL @ H.P.
SCALE: 1"=1'-0"

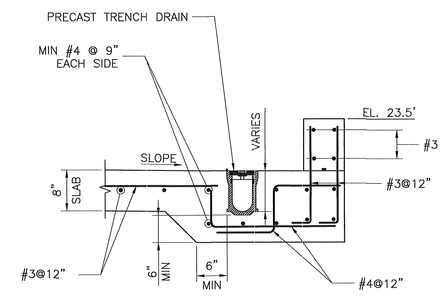


2 / S105 TRENCH DETAIL @ L.P.
SCALE: 1"=1'-0"

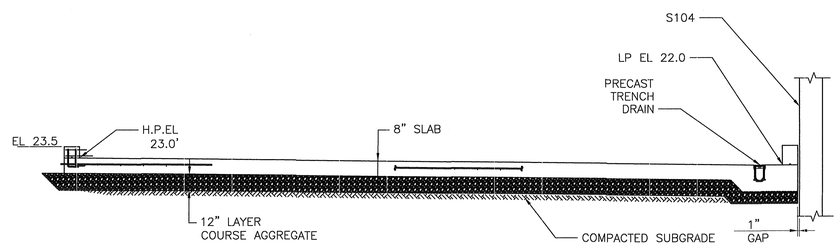


3 / S105 SECTION – AREA 9
NTS

**PRELIMINARY**
**NOT FOR CONSTRUCTION**


IES ENGINEERS
ENGINEERING FOR INDUSTRY
1720 WALTON ROAD
PHONE: (610) 828-3078
BLUE BELL, PA 19422
FAX: (610) 828-7842


| REV. | DATE | DESCRIPTION | BY | APP |
|---|---|---|---|---|
| A | 09-06-16 | CLIENT REVIEW | | |
| B | 01-13-17 | CLIENT REVIEW | | |

NOTE:
THE CONTRACTOR SHALL FIELD VERIFY ALL DIMENSIONS AND EXISTING CONDITIONS PRIOR TO PROCEEDING WITH ANY WORK. WHERE DISCREPANCIES OCCUR BETWEEN THESE DOCUMENTS AND EXISTING CONDITIONS, THE DISCREPANCY SHALL BE REPORTED TO THE OWNER AND/OR ENGINEER FOR EXPEDITING AND RESOLUTION.

CLIENT
ELCON RECYCLING FACILITY
FALLS TOWNSHIP, BUCKS COUNTY, PA

PROJECT TITLE
UNLOADING STATION & TANK CONTAINMENT

DRAWING TITLE
FOUNDATION & CONTAINMENT PLAN – AREA 9

| | | | |
|---|---|---|---|
| LAST UPDATE 01-05-17 | ENGINEER AP | RECORDS CONTROL | IES CONTRACT No. EG151065.03 |
| DATE 02-09-16 | DESIGNER MWM | | CADD FILE No. 106503S101-111 |
| SCALE 3/16"=1'-0" | DRAWN BKA | | XREF FILE(S) – |

ALBERT P. POPOLI
COMMONWEALTH OF PENNSYLVANIA REGISTERED PROFESSIONAL ENGINEER
PA.P.E. NO. 35446

DRAWING NUMBER
S105

REVISION LEVEL
B

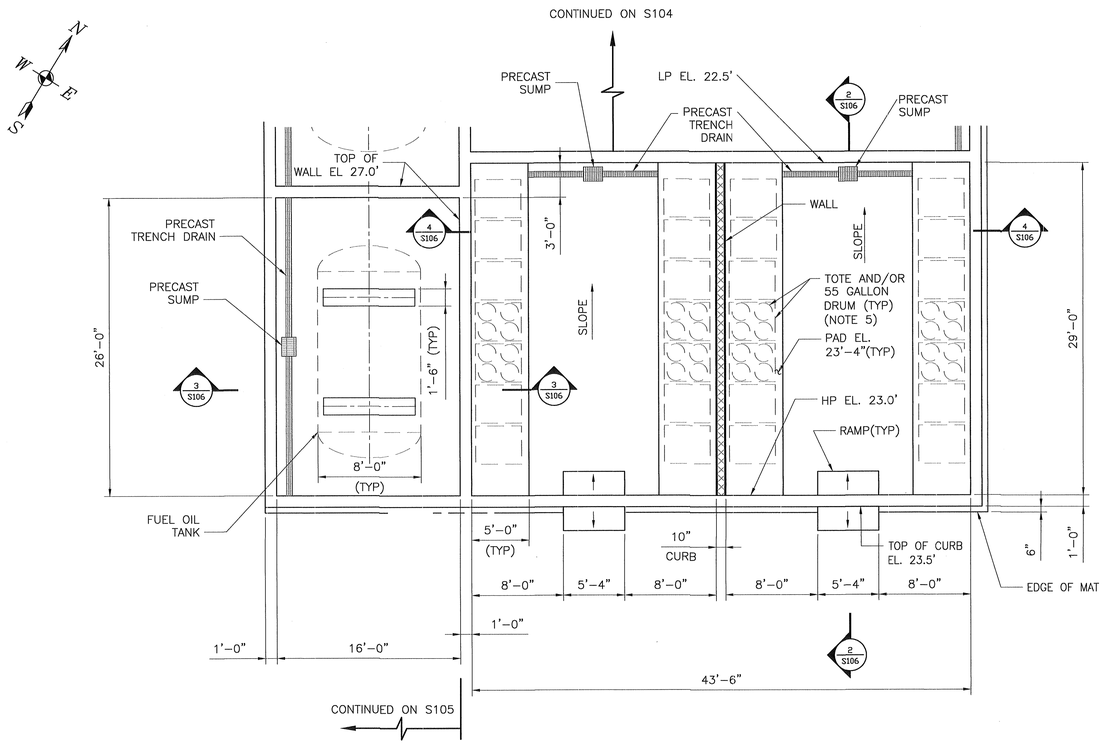


1 S106 PLAN – TOTE & FUEL OIL TANK AREA
SCALE: 3/16"=1'-0"
3/16" 0 1 2 4 8 12

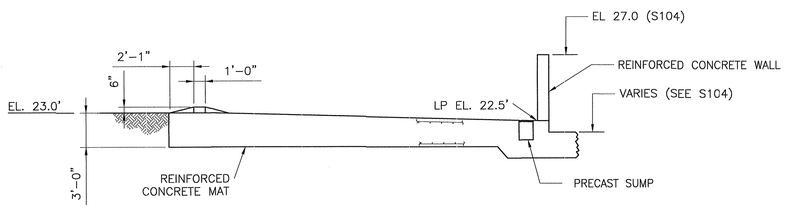


2 S106 SECTION – TOTE AREA
SCALE: 3/16"=1'-0"
3/16" 0 1 2 4 8 12

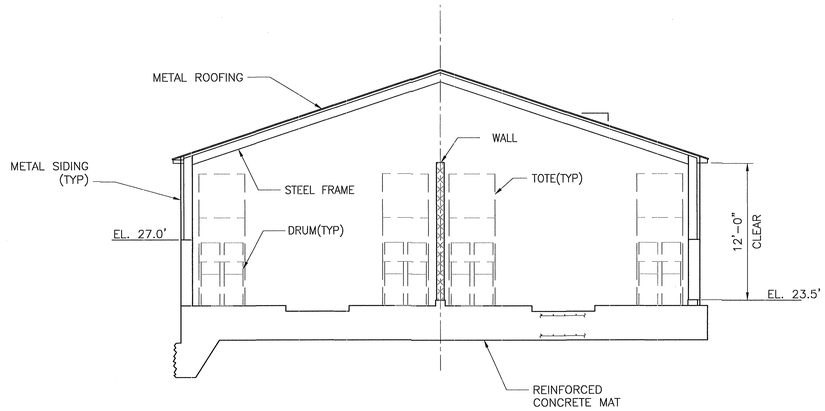


4 S106 SECTION – TOTE AREA
SCALE: 3/16"=1'-0"
3/16" 0 1 2 4 8 12

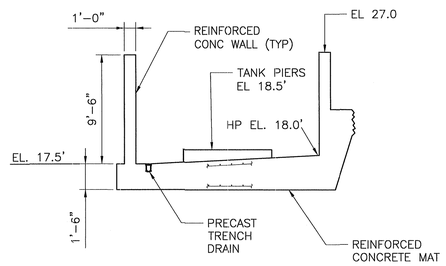


3 S106 SECTION – FUEL OIL TANK AREA
SCALE: 3/16"=1'-0"
3/16" 0 1 2 4 8 12

NOTES:
1. CODE NOTES DWG S101
2. TOTE CONTAINMENT WALL HEIGHTS BASED ON 10% OF TOTAL VOLUME OF EACH TOTE AREA.
3. TOTE AREA HAS WALLS AND ROOF – RAINWATER CONTAINMENT NOT REQUIRED.
4. FUEL OIL TANK CONTAINMENT WALL HEIGHT BASED ON 100% OF TANK CONTENTS PLUS RAINWATER FROM 25 YEAR STORM.
5. DRUM AND TOTE LABELS MUST FACE AISLE, ONLY (2) DRUMS ON PALLET MAY HAVE WASTE (2) EMPTY DRUMS FURTHEST FROM AISLE TO SUPPORT (1) PALLET ABOVE.

**PRELIMINARY**
**NOT FOR CONSTRUCTION**


IES ENGINEERS
ENGINEERING FOR INDUSTRY
1720 WALTON ROAD
PHONE: (610) 828-3078
BLUE BELL, PA 19422
FAX: (610) 828-7842


| REV. | DATE | DESCRIPTION | BY | APP |
|---|---|---|---|---|
| A | 09-06-16 | CLIENT REVIEW | | |
| B | 01-13-17 | CLIENT REVIEW | | |

NOTE:
THE CONTRACTOR SHALL FIELD VERIFY ALL DIMENSIONS AND EXISTING CONDITIONS PRIOR TO PROCEEDING WITH ANY WORK. WHERE DISCREPANCIES OCCUR BETWEEN THESE DOCUMENTS AND EXISTING CONDITIONS, THE DISCREPANCY SHALL BE REPORTED TO THE OWNER AND/OR ENGINEER FOR EXPEDITING AND RESOLUTION.

CLIENT
ELCON RECYCLING FACILITY
FALLS TOWNSHIP, BUCKS COUNTY, PA

PROJECT TITLE
UNLOADING STATION & TANK CONTAINMENT

DRAWING TITLE
FOUNDATION & CONTAINMENT TOTE AREA 13 & FUEL OIL TANK – PLAN & SECTIONS

| LAST UPDATE | ENGINEER | IES CONTRACT No. |
|---|---|---|
| 01-05-17 | AP | EG151065.03 |
| DATE | DESIGNER | CADD FILE No. |
| 02-09-16 | MWM | 106503S101-111 |
| SCALE | DRAWN | XREF FILE(S) |
| 3/16"=1'-0" | BKA | – |

RECORDS CONTROL

ALBERT P. POPOLI
COMMONWEALTH OF PENNSYLVANIA
REGISTERED PROFESSIONAL ENGINEER
ALBERT PETER POPOLI
PA.P.E. NO. 35446
PA.P.E. NO. 35446

DRAWING NUMBER
S106

REVISION LEVEL
B

NOTES:
1. CODE NOTES DWG S101
2. CONTAINMENT WALL HEIGHT BASED ON SPILL FROM LARGEST SINGLE TANK, PLUS RAINWATER FROM 25 YEAR STORM.

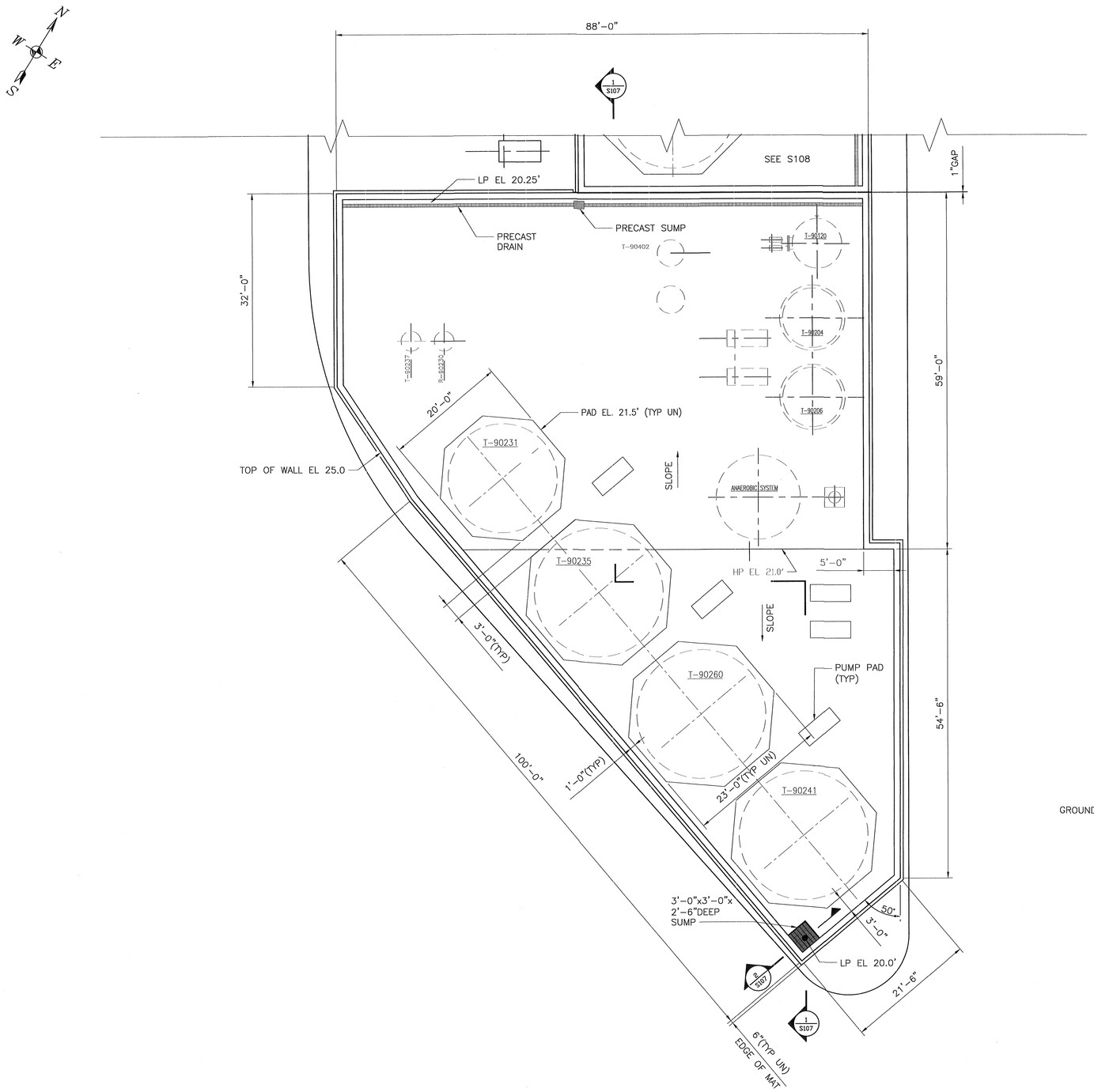


1 / S107 PLAN – AREA 11
SCALE: 1/8"=1'-0"
1/8" 0 1 2 4 8

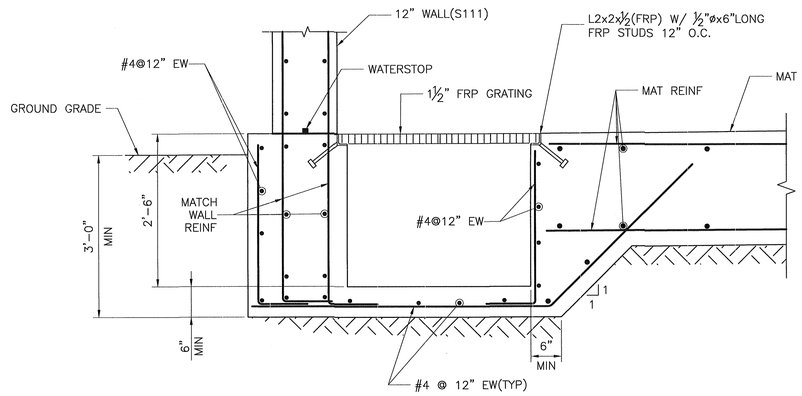


2 / S107 CAST IN PLACE SUMP SECTION
SCALE: 1"=1'-0"

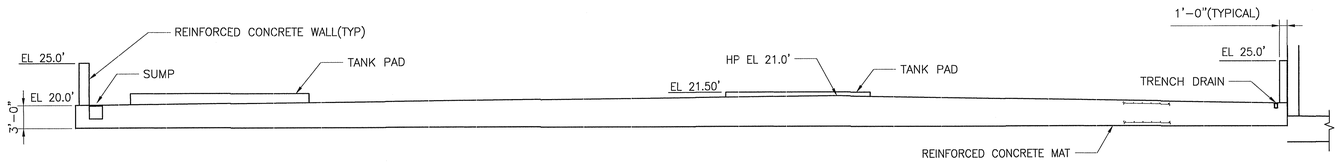


1 / S107 SECTION – AREA 11
SCALE: 1/8"=1'-0"
1/8" 0 1 2 4 8

**PRELIMINARY**
**NOT FOR CONSTRUCTION**


IES ENGINEERS
ENGINEERING FOR INDUSTRY
1720 WALTON ROAD
PHONE: (610) 828-3078
BLUE BELL, PA 19422
FAX: (610) 828-7842


| REV. | DATE | DESCRIPTION | BY | APP |
|---|---|---|---|---|
| A | 09-06-16 | CLIENT REVIEW | | |
| B | 01-13-17 | CLIENT REVIEW | | |

NOTE:
THE CONTRACTOR SHALL FIELD VERIFY ALL DIMENSIONS AND EXISTING CONDITIONS PRIOR TO PROCEEDING WITH ANY WORK. WHERE DISCREPANCIES OCCUR BETWEEN THESE DOCUMENTS AND EXISTING CONDITIONS, THE DISCREPANCY SHALL BE REPORTED TO THE OWNER AND/OR ENGINEER FOR EXPEDITING AND RESOLUTION.

CLIENT
ELCON RECYCLING FACILITY
FALLS TOWNSHIP, BUCKS COUNTY, PA

PROJECT TITLE
UNLOADING STATION & TANK CONTAINMENT

DRAWING TITLE
FOUNDATION & CONTAINMENT PLAN AREA 11

| | | |
|---|---|---|
| LAST UPDATE 01-05-17 | ENGINEER AP | IES CONTRACT No. EG151065.03 |
| DATE 04-19-16 | DESIGNER BKA | CADD FILE No. 106503S101-111 |
| SCALE AS NOTED | DRAWN BKA | XREF FILE(S) — |

RECORDS CONTROL

ALBERT P. POPOLI
COMMONWEALTH OF PENNSYLVANIA REGISTERED PROFESSIONAL ENGINEER
PA.P.E. No. 35446

DRAWING NUMBER
S107

REVISION LEVEL
B

NOTES:
1. CODE NOTES DWG S101
2. CONTAINMENT WALL HEIGHT BASED ON LARGEST TANK IN EACH AREA, PLUS RAINWATER FROM 25 YEAR STORM.

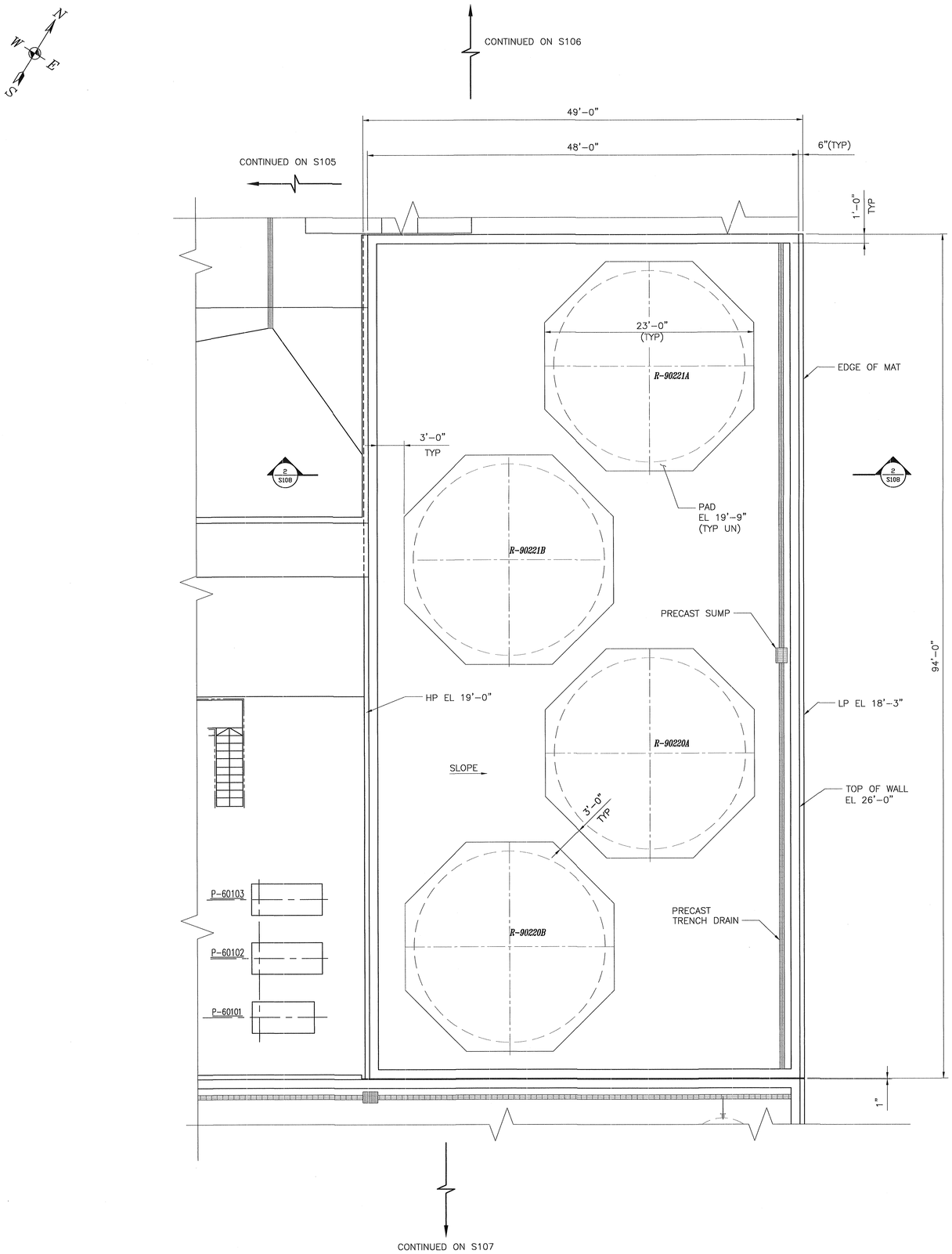


1 / S108 PLAN – EFFLUENT WATER TANK AREA
SCALE: 3/16"=1'-0"
3/16" 0 1 2 4 8 12

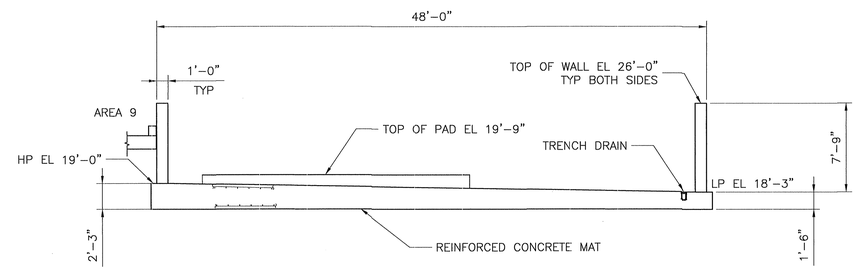


2 / S108 SECTION – EFFLUENT TANK AREA
SCALE: 3/16"=1'-0"
3/16" 0 1 2 4 8 12

PRELIMINARY
NOT FOR CONSTRUCTION


IES ENGINEERS
ENGINEERING FOR INDUSTRY
1720 WALTON ROAD
PHONE: (610) 828-3078
BLUE BELL, PA 19422
FAX: (610) 828-7842


| REV. | DATE | DESCRIPTION | BY | APP |
|---|---|---|---|---|
| A | 09-06-16 | CLIENT REVIEW | | |
| B | 01-13-17 | CLIENT REVIEW | | |

NOTE:
THE CONTRACTOR SHALL FIELD VERIFY ALL DIMENSIONS AND EXISTING CONDITIONS PRIOR TO PROCEEDING WITH ANY WORK. WHERE DISCREPANCIES OCCUR BETWEEN THESE DOCUMENTS AND EXISTING CONDITIONS, THE DISCREPANCY SHALL BE REPORTED TO THE OWNER AND/OR ENGINEER FOR EXPEDITING AND RESOLUTION.

CLIENT
ELCON RECYCLING FACILITY
FALLS TOWNSHIP, BUCKS COUNTY, PA

PROJECT TITLE
UNLOADING STATION & TANK CONTAINMENT

DRAWING TITLE
FOUNDATION
EFFLUENT WATER TANKS
AREA 11

| | | | |
|---|---|---|---|
| LAST UPDATE 01-06-17 | ENGINEER AP | RECORDS CONTROL | IES CONTRACT No. EG151065.03 |
| DATE 04-19-16 | DESIGNER BKA | | CADD FILE No. 106503S101-111 |
| SCALE AS NOTED | DRAWN BKA | | XREF FILE(S) — |

ALBERT P. POPOLI
PA.P.E. NO. 35446

DRAWING NUMBER
S108

REVISION LEVEL
B

NOTES:

1. CODE NOTES DWG S101
2. CONTAINMENT CURB HEIGHT BASED ON SPILL FROM 10% OF THE TOTAL VOLUME OF 500 TONS OF SALT OR SLUDGE.
3. BOXING SHOWN IS ⅓ TOTES, AND ⅓ SUPERSAKS.
4. LABELS ON TOTES AND SUPERSAKS MUST FACE AISLE.

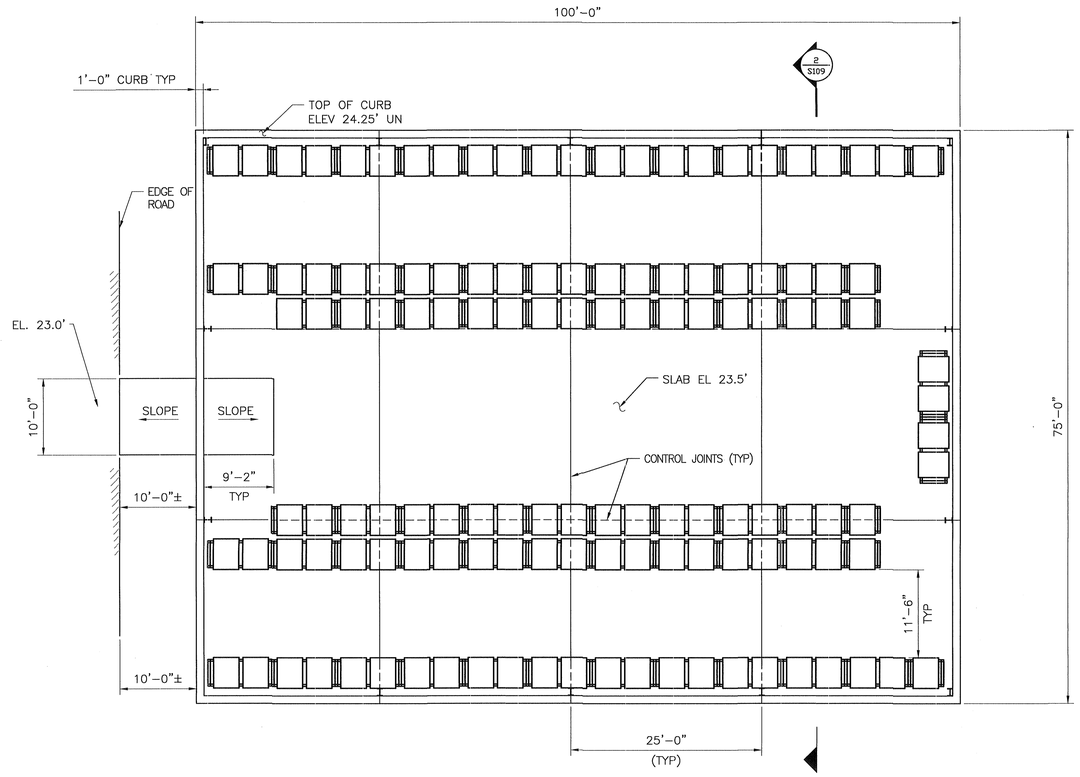


1 / S109 PLAN – WAREHOUSE
SCALE: 1/8"=1'-0"
1/8" 0 1 2 4 8

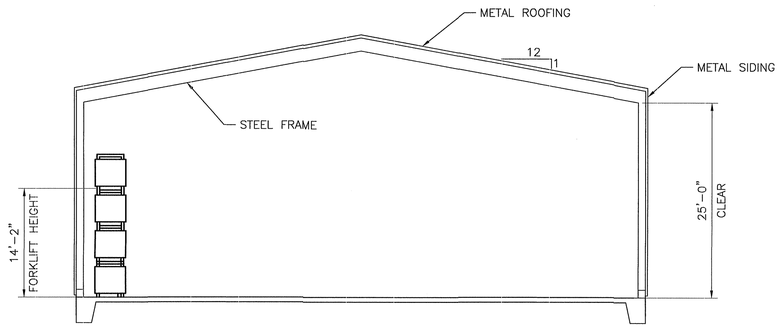


2 / S109 BUILDING SECTION
SCALE: 1/8"=1'-0"

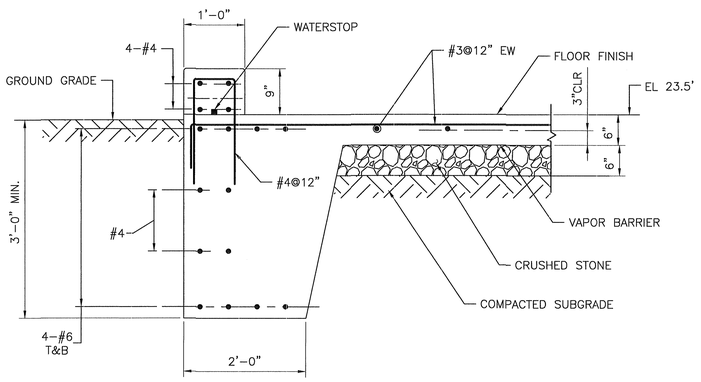


3 / S109 DETAIL – TYPICAL WAREHOUSE FOUNDATION
SCALE: 3/4"=1'-0"
3/4" 0 0.5 1 2 3 4

PRELIMINARY
NOT FOR CONSTRUCTION


ENGINEERS
ENGINEERING FOR INDUSTRY
1720 WALTON ROAD
PHONE: (610) 828-3078
BLUE BELL, PA 19422
FAX: (610) 828-7842


| REV. | DATE | DESCRIPTION | BY | APP |
|---|---|---|---|---|
| A | 09-06-16 | CLIENT REVIEW | | |
| B | 01-13-17 | CLIENT REVIEW | | |

NOTE:
THE CONTRACTOR SHALL FIELD VERIFY ALL DIMENSIONS AND EXISTING CONDITIONS PRIOR TO PROCEEDING WITH ANY WORK. WHERE DISCREPANCIES OCCUR BETWEEN THESE DOCUMENTS AND EXISTING CONDITIONS, THE DISCREPANCY SHALL BE REPORTED TO THE OWNER AND/OR ENGINEER FOR EXPEDITING AND RESOLUTION.

CLIENT
ELCON RECYCLING FACILITY
FALLS TOWNSHIP, BUCKS COUNTY, PA

PROJECT TITLE
UNLOADING STATION & TANK CONTAINMENT

DRAWING TITLE
WAREHOUSE FOUNDATION PLAN
AREA 12

| LAST UPDATE | ENGINEER | IES CONTRACT No. |
|---|---|---|
| 01-05-17 | AP | EG151065.03 |
| DATE | DESIGNER | CADD FILE No. |
| 04-19-16 | BKA | 1065035101-111 |
| SCALE | DRAWN | XREF FILE(S) |
| AS NOTED | BKA | – |

RECORDS CONTROL

ALBERT P. POPOLI
COMMONWEALTH OF PENNSYLVANIA
REGISTERED PROFESSIONAL ENGINEER
ALBERT PAUL POPOLI
No. 35446-E
PA.P.E. NO. 35446

DRAWING NUMBER
S109

REVISION LEVEL
B

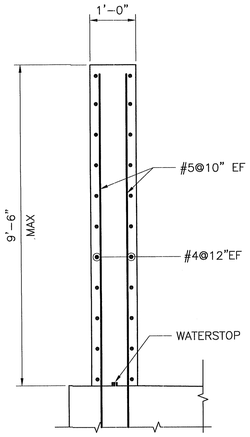


S110 TYPICAL 12" WALL SECTION
SCALE: 3/4"=1'-0"

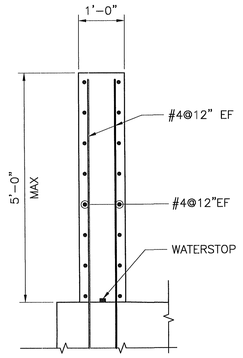


S110 TYPICAL 8" WALL SECTION
SCALE: 3/4"=1'-0"

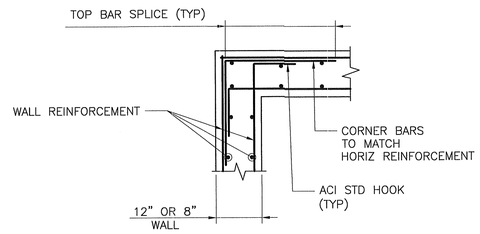


S110 WALL CORNER DETAIL
SCALE: 3/4"=1'-0"

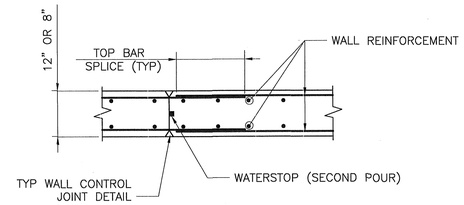


S110 WALL CONSTRUCTION JOINT
SCALE: 3/4"=1'-0"

NOTES:
1. CODE NOTES DWG S101

REBAR SPLICES

| TENSION SPLICES | | |
|---|---|---|
| BAR # | STANDARD LENGTH | TOP BAR* LENGTH |
| #3 | 19" | 24" |
| #4 | 25" | 32" |
| #5 | 31" | 40" |
| #6 | 37" | 48" |
| #7 | 55" | 71" |
| #8 | 63" | 81" |
| #9 | 70" | 91" |

* TOP BAR- HORIZONTAL REINFORCEMENT SO PLACED THAT MORE THAN 12 INCHES OF FRESH CONCRETE IS CAST BELOW THE SPLICE.

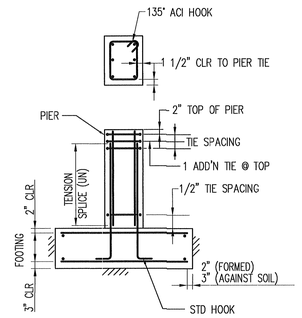


S110 TYPICAL REBAR DETAILS
SCALE: 1/8" = 1'-0"
SEE FOUNDATION PLAN FOR FOOTING & PIER DIMENSIONS & REINFORCING
N.T.S.

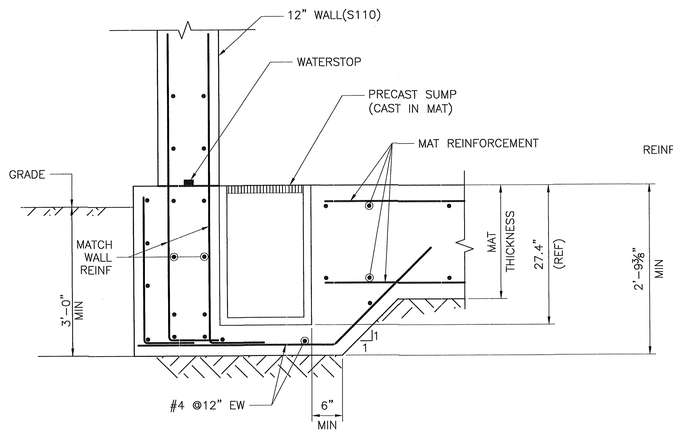


S110 SECTION @ PRECAST SUMP
SCALE: 1"=1'-0"

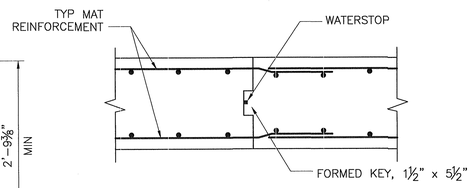


S110 MAT CONSTRUCTION JOINT DETAIL
SCALE: NTS

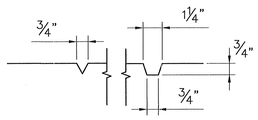


"V" GROOVE OR TAPERED JOINT. CAULK WITH SIKA-FLEX 1A INSTALL FULL HEIGHT OF WALL, BOTH SIDES AND TOP OF WALL

S110 WALL CONTROL JOINT REGLET DETAIL
SCALE: NTS

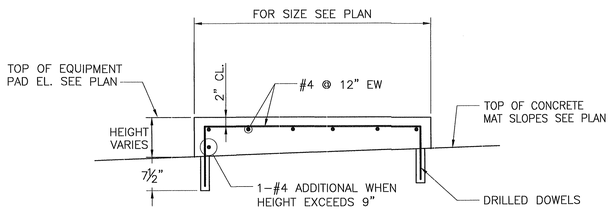


S110 TANK OR EQUIPMENT SUPPORT PAD DETAIL
SCALE: N.T.S.

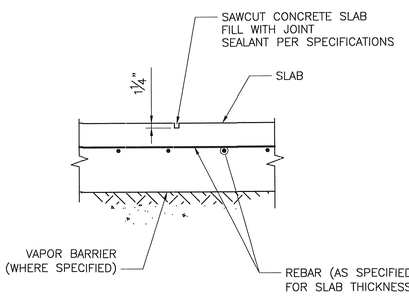


S110 SLAB CONTROL JOINT
SCALE: 3/4"=1'-0"

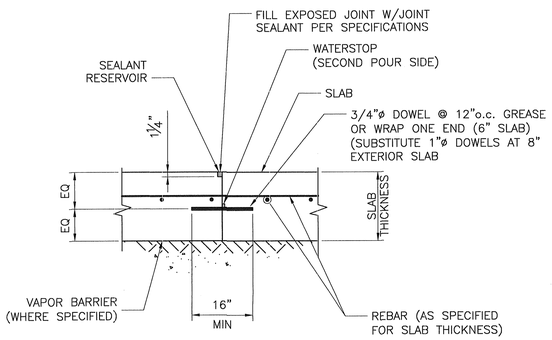


S110 SLAB CONSTRUCTION JOINT
SCALE: 3/4"=1'-0"

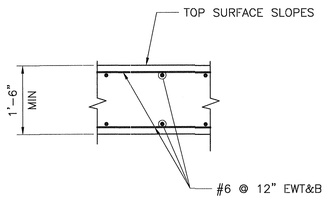


S110 REINFORCED CONCRETE MAT
SCALE: 3/4"=1'-0"

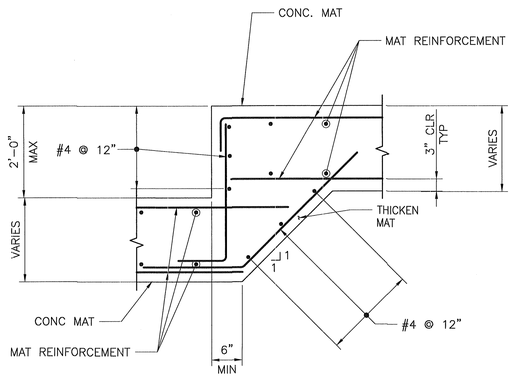


S110 STEPPED FOOTING
SCALE: 3/4"=1'-0"

PRELIMINARY
NOT FOR CONSTRUCTION


IES ENGINEERS
ENGINEERING FOR INDUSTRY
1720 WALTON ROAD
PHONE: (610) 828-3078
BLUE BELL, PA 19422
FAX: (610) 828-7842


| REV. | DATE | DESCRIPTION | BY | APP |
|---|---|---|---|---|
| A | 09-06-16 | CLIENT REVIEW | | |
| B | 01-13-17 | CLIENT REVIEW | | |

NOTE:
THE CONTRACTOR SHALL FIELD VERIFY ALL DIMENSIONS AND EXISTING CONDITIONS PRIOR TO PROCEEDING WITH ANY WORK. WHERE DISCREPANCIES OCCUR BETWEEN THESE DOCUMENTS AND EXISTING CONDITIONS, THE DISCREPANCY SHALL BE REPORTED TO THE OWNER AND/OR ENGINEER FOR EXPEDITING AND RESOLUTION.

CLIENT
ELCON RECYCLING FACILITY
FALLS TOWNSHIP, BUCKS COUNTY, PA

PROJECT TITLE
UNLOADING STATION & TANK CONTAINMENT

DRAWING TITLE
TYPICAL STRUCTURAL DETAILS

| | | |
|---|---|---|
| LAST UPDATE 01-06-17 | ENGINEER AP | IES CONTRACT No. EG151065.03 |
| DATE 07-11-16 | DESIGNER BKA | CADD FILE No. 106503S101-111 |
| SCALE AS NOTED | DRAWN BKA | XREF FILE(S) — |

RECORDS CONTROL

ALBERT P. POPOLI
COMMONWEALTH OF PENNSYLVANIA REGISTERED PROFESSIONAL ALBERT PETER POPOLI ENGINEER
PA.P.E. NO. 35446

DRAWING NUMBER
S110

REVISION LEVEL
B

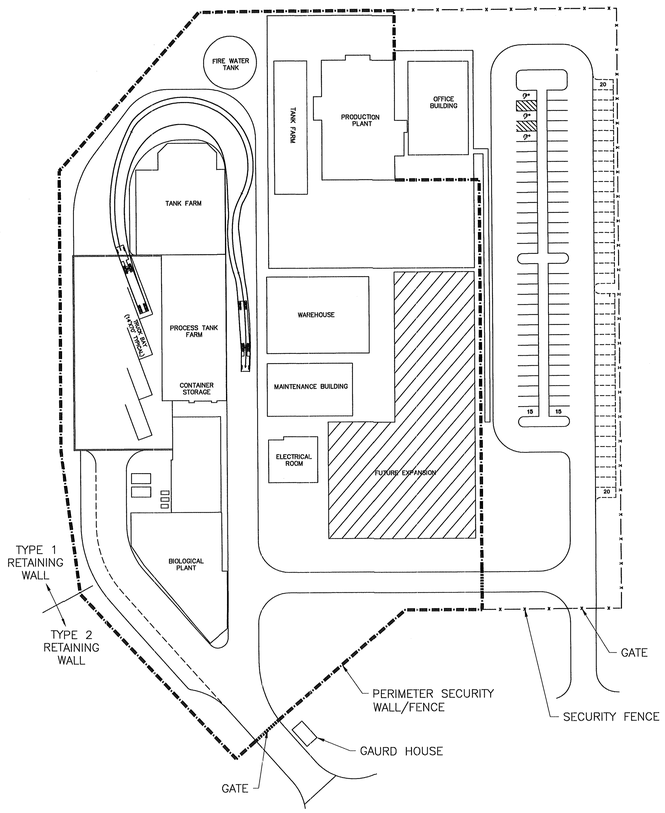


KEY PLAN
1"= 60'

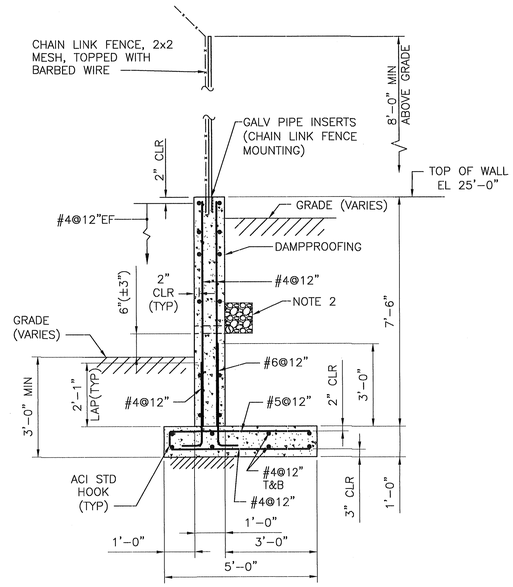


TYPICAL CROSS SECTION
TYPE 1 RETAINING WALL
S111 SCALE: 1/2"=1'-0"

## NOTES:

1. CODE NOTES S101.
2. BACKFILL DRAINAGE AND CONVEYANCE SYSTEM:
   18x18 AASTO No.57 STONE WRAPPED IN FILTER FABRIC (MIRAFI 140N), WITH A 4" DIAMETER PERFORATED DRAIN PIPE WITH 2" DIAMETER PIPE WEEPS. THE SYSTEM SHALL RUN THE FULL LENGTH OF THE WALL, WITH WEEPS SPACED AT 4FT. MAXIMUM FROM THE END AND 8FT MAXIMUM ALONG THE WALL.
3. INSTALL WALL CONTROL JOINTS:
   A. AT 10'-0" MAX FROM CORNERS.
   B. AT 20'-0" MAX O.C. ALONG WALL.
   C. AT CONSTRUCTION JOINTS.

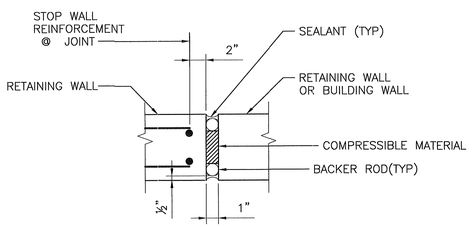


TYPICAL WALL EXPANSION JOINT
NTS
SEE KEY PLAN FOR LOCATIONS

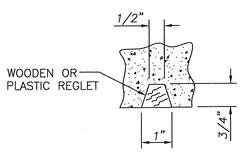


TYPICAL WALL CONTROL JOINT (Note 3)
(CAST IN REGLET)
NTS

INSTALL REGLET FULL HEIGHT OF PUBLIC FACE, OVER TOP OF WALL AND DOWN BACK SIDE TO A POINT 1'-0" MINIMUM BELOW GRADE. FILL WITH SEALANT AFTER CONCRETE HAS CURED.

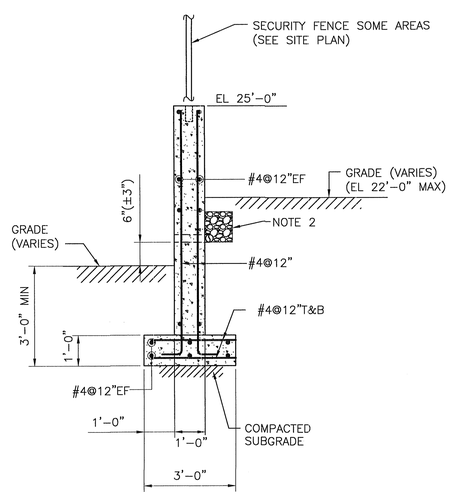


TYPICAL CROSS SECTION
TYPE 2 RETAINING WALL
S111 SCALE: 1/2"=1'-0"

(SEE TYPE 1 CROSS SECTION FOR ADDITIONAL INFORMATION)

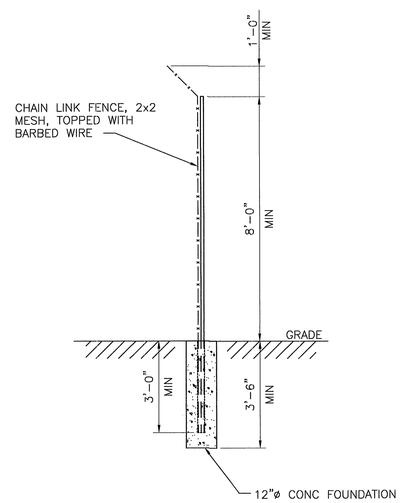


TYPICAL CROSS SECTION
SECURITY FENCE FOUNDATION
S111 SCALE: 1/2"=1'-0"

**PRELIMINARY**
**NOT FOR CONSTRUCTION**


IES ENGINEERS
ENGINEERING FOR INDUSTRY
1720 WALTON ROAD
PHONE: (610) 828-3078
BLUE BELL, PA 19422
FAX: (610) 828-7842


| REV. | DATE | DESCRIPTION | BY | APP |
|---|---|---|---|---|
| A | 09-06-16 | CLIENT REVIEW | | |
| B | 01-13-17 | CLIENT REVIEW | | |

NOTE:
THE CONTRACTOR SHALL FIELD VERIFY ALL DIMENSIONS AND EXISTING CONDITIONS PRIOR TO PROCEEDING WITH ANY WORK. WHERE DISCREPANCIES OCCUR BETWEEN THESE DOCUMENTS AND EXISTING CONDITIONS, THE DISCREPANCY SHALL BE REPORTED TO THE OWNER AND/OR ENGINEER FOR EXPEDITING AND RESOLUTION.

CLIENT
ELCON RECYCLING FACILITY
FALLS TOWNSHIP, BUCKS COUNTY, PA

PROJECT TITLE
UNLOADING STATION & TANK CONTAINMENT

DRAWING TITLE
RETAINING WALL & SECURITY FENCE SECTIONS AND DETAILS

| | | | |
|---|---|---|---|
| LAST UPDATE 01-05-17 | ENGINEER AP | RECORDS CONTROL | IES CONTRACT No. EG151065.03 |
| DATE 04-19-16 | DESIGNER BKA | | CADD FILE No. 106503S101-111 |
| SCALE AS NOTED | DRAWN BKA | | XREF FILE(S) — |

ALBERT P. POPOLI
COMMONWEALTH OF PENNSYLVANIA
REGISTERED PROFESSIONAL
ALBERT PETER POPOLI
Expires
PA.P.E. LIC. NO. 35446

DRAWING NUMBER
S111

REVISION LEVEL
B

APPENDIX D-2

TYPICAL INCOMING TOTE AND DRUM INFORMATION

My Account | Contact Us | Sign In | Cart $0.00

ULINE 1-800-295-5510

Search

Products Uline Products Quick Order Catalog Special Offers About Us

Home > All Products > Drums, Pails and Containers > IBC Tanks

# IBC Tank - 275 Gallon

Enlarge & Video

Hold as much liquid as **five 55-gallon** drums. Use 20% less floor space.

- Store and dispense water, pesticides or other liquids and powders.
- Chemical-resistant HDPE tank surrounded by a galvanized steel cage.
- Mounted to steel frame pallet for easy transport. 4-way fork access.
- Stack up to 3 high.
- 6" diameter fill cap, 2" diameter drain.
- FDA compliant.

| MODEL NO. | DIMENSIONS L x W x H | CAPACITY | UN RATING | WT. (LBS.) | PRICE EACH | | ADD TO CART | |
|---|---|---|---|---|---|---|---|---|
| | | | | | 1 | 3+ | | |
| H-3886 | 48 x 40 x 46" | 275 Gallon | 31HA1/Y | 128 | $499 | $479 | 1 | ADD |

SHIPS VIA MOTOR FREIGHT

Additional Info | Email Page | Add to Favorites | Request a Catalog

**FEATURES:**

TANK:
- Blow molded, natural
- Can be used to store drinking water.
- Overflow Volume: 280 gal
- UV inhibitor
- Filter Opening:
  - Inner Diameter: 5 3/4"
  - Outer Diameter: 6"
  - Closed with red screw cap.
  - 2" solid plug with BSP (British Standard Pipe) threading.
- Discharge Opening:
  - Butterfly valve
  - Viton gasket
  - Male NPS outlet
  - 3-piece dust cap

CAGE:
- Material:
  - Electro galvanized steel
- 2-piece label plate
- Tie bars

PALLET:
- Fork Opening:
  - 4" height

Ships Via Motor Freight

Availability: In Stock
Unit Weight: 128 lbs.

Instructions

Parts List

Test Report

Catalog Page 489

Country of Origin: USA

- Material:
  - Conductive anti-static material
- Colorant:
  - Heavy metal free

**TEMPERATURE:**
- Tank: -78 to 150 F

**COMPATIBILITY:**
- Not for use with flammable liquids.

**SPECIFICATIONS:**
- Stacking Test Load: 3,855 kg
- Gross Mass: 2,015 kg
- BPA Free

Call 1-855-493-HOGS or CHAT LIVE now.

New Pig

Search by keyword, item # or SDS

Free $25 The Home Depot Gift Card with a $250 order

# 55-Gallon Tight-Head UN Rated Steel Drum

DRM427 Write a Review

**55 gal., UN1A1/X1.6/300, 1.2/0.9/1.2 mm Thick**

As Low As **$81.00**

Tough, UN Rated drums are made for hazardous materials, so you can rely on them to deliver safety and compliance. Read More ▸

**Please choose an option to see pricing.**

**$81.00 - $96.00**

**This product has accessories — take a look ▸**

OPTIONS

**Style:** Choose Style

**Qty** 1

ADD TO CAR

## Customers Who Bought This Also Bought

DRM973

### 55-Gallon Open-Head UN Rated Steel Drum with Bungs

- 55 gal.
- UN1A2/Y1.2/100
- UN1A2/Y1.2/100/S

**$92.00 - $108.00**

Call **1-855-493-HOGS** or **CHAT LIVE** now.

DRM844 ★★★★★(1)

### 55-Gallon Open-Head UN Rated Steel Drum

- 55 gal.
- UN1A2/Y1.2/100
- UN1A2/Y425/S

**$87.00 - $103.00**

BEST SELLER

MAT240 ★★★★½(111)

### PIG Absorbent Mat Pad in Dispenser Box

- Heavyweight
- 15" x 20"
- 100 pads

**$86.00 - $104.00**

Previous Page 1 of 4 Next

## Description

**Tough, UN Rated drums are made for hazardous materials, so you can rely on them to deliver safety and compliance.**

- UN Rated and tested to help ensure safe shipping of hazardous materials

## Specifications

| | |
|---|---|
| Drum Lid Closure | Tight-Head |
| Container Type | Drums & Barrels |
| Lining | Lined; Unlined |

- Tight-head design is equipped with 2" NPT and 3/4" NPT bungs
- Interior is coated with a corrosion inhibitor; choose optional phenolic/epoxy lining for added resistance
- 18-gauge steel top and bottom with a 20-gauge body meet strict wall thickness requirements to ensure strength, durability and long life

Call 1-855-493-HOGS or CHAT LIVE now.

| | |
|---|---|
| Size | 55 gal. |
| Thickness | 1.2/0.9/1.2 mm Thick |
| Color | Black & White |
| Dimensions | ext. dia. 23" x 35.25" H |
| Storage Capacity | 55 gal. |
| Bung Type | 2" NPT and .75" NPT (Tri-Sure) Bungs |
| Drum Type | Steel |
| Interior Dimensions | 22.5" Dia. x 33" H Interior |
| Lid Type | Tight-Head |
| Sold as | 1 each |
| Weight | 40 lbs. |
| # per Pallet | 8 |
| Composition | Drum - Carbon Steel Bung Gasket - Buna-N Lining - Phenolic Epoxy |
| UNSPSC | 24112108 |

Page 359

Call 1-855-493-HOGS or CHAT LIVE now.

Pigalog®
Page Number

## Accessories for DRM427

SGN645

### Danger Contents May Be Flammable Drum ID Label

- Labels
- Drum & Container Identification
- 6" x 6"

**$49.75 - $71.80**

SGN646

### Danger Contains Hazardous Waste Drum ID Label

- Labels
- Drum & Container Identification
- 6" x 6"

**$49.75 - $71.80**

SGN647

### Caution Hazardous Waste Drum ID Label

- Labels
- Drum & Container Identification
- 6" x 6"

**$49.75 - $71.80**

Previous Page 1 of 8 Next

Call 1-855-493-HOGS or CHAT LIVE now.

## Reviews

Based on 0 reviews WRITE A REVIEW

## Additional Information

Product Data Sheet (PDS)

### Certifications, Approvals and Ratings

UN1A1/X1.6/300

Get your very own 2016 Pigalog!

MAIL IT TO ME VIEW ONLINE

DAILY DEAL - LIMIT 1

Pig Blue® Absorbent Mat Roll

~~$53.00 - $65.00~~

$48.75

Sign up for PIG Deals

Score incredible offers!

email@example.com SIGN UP

CUSTOMER SERVICE

Contact Us

PIG Promise Call 1-855-493-HOGS or CHAT LIVE now.

Returns

Shipping & Terms

Federal Shipping & Ordering

Federal Overseas Shipping

Discount Programs

International Distributors

Online Catalog

No Guff Guarantee™

RESOURCES & HELP

Expert Advice

National Stock Numbers

Recycled Products

Help & FAQ's

Site Map

Explore the Issues

ABOUT NEW PIG

The New Pig Difference

Our History

Careers

Newsroom

**STAY CONNECTED** Call **1-855-493-HOGS** or **CHAT LIVE** now.

Check out Expert Advice

About SSL Certification

## DO-RIGHT DONE RIGHT

We've got your back. Our team of leak and spill experts is ready to hop-to on your behalf. That's the PIG Promise. Learn more.

## THE NEW PIG NO GUFF GUARANTEE™

We stand behind 100% of our products 100% of the time. If you're not happy, we'll refund every penny, including taxes and shipping both ways. Zero risk. No guff. All good.

ONE PORK AVENUE • PO BOX 304 • TIPTON, PA 16684-0304

1-855-493-HOGS (493-4647) • Fax: 1-800-621-PIGS (621-7447) • hothogs@newpig.com

© 2016 New Pig Corporation. All Rights Reserved.

Trademarks • Privacy Policy • Terms of Use

APPENDIX D-3

TYPICAL DRAIN AND SUMP MATERIALS OF CONSTRUCTION

SMITH®
CUSTOMER DRIVEN

JAY R. SMITH MFG. CO.
Member of Morris Group International

# SMITH/ACO Trench Drain Series

Polymer Concrete, Fiberglass and Stainless Steel Surface Drainage Systems

MORRIS GROUP
INTERNATIONAL

## Table of Contents

Drainage Systems Selection Guide ..... 3
6" Wide Channel System, Fig. 9818 ..... 4
6" Wide Channel System, Fig. 9814 ..... 6
6" Wide Channel System, Fig. 9816 ..... 8
12" Wide Channel Brute System, Fig. 9828 ..... 10
6" Wide Fiberglass Trench, Fig. 9810 ..... 12
10" Wide Fiberglass Trench, Fig. 9812 ..... 14
9818 Series with QuickLock® ..... 16
9832 Shallow Channel Systems ..... 17
9836 Shallow Channel W/Rails ..... 17
9837 Membrane Drain ..... 17
9833 MINIKLASSIC Narrow Channel ..... 18
9857 Oil Separator ..... 18
9846 Sump Boxes ..... 18
9860 Series Catch Basins ..... 19
9870 Series Drainage Systems Grates ..... 20
9812 Series Drainage Systems Grates ..... 22
Accessories ..... 23
Chemical Resistance Guide ..... 24
9818 Specifications ..... 25
9814 Specifications ..... 26
9828 Specifications ..... 27
9812 Specifications ..... 28
9814, 9816, 9818 Channel Slope® Installation ..... 29
9828 Channel Brute Installation ..... 30
9812 Fiberglass Installation ..... 31

## Design Approach

To select the proper drainage system:

1. Identify the appropriate loading and fall conditions based on the anticipated traffic, site topography or other physical constraints.

2. Calculate the length and depth of the catchment area.

3. Identify rainfall intensity over the given area; or identify the output position, source and flow rate of the liquid to be drained.

4. Determine runoff surface flow characteristics.

5. Calculate required flow rate per meter of drainage channel and its distribution (ie., evenly or unevenly distributed).

6. Select the system with the appropriate width for the conditions identified.

7. Determine the number, size and locations of outlets to the sewer system.

## System Fall Types

| | |
|---|---|
| Sloped .6% | 9814, 9816, 9818 and 9828 |
| Sloped 1.0% | 9812 |
| Sloped 1.0% | 9810 |
| Neutral | 9810, 9812, 9814, 9816, 9818, 9828, 9832, 9833, 9836 and 9837 |

## Nominal Width

| | | |
|---|---|---|
| 2” | (51 mm) Inside Dim. | 9833 |
| 6” | (155 mm) Outside Dim. | 9810, 9814, 9816, 9818, 9832, 9836, and 9837 |
| 10” | (257 mm) Outside Dim. | 9812 |
| 12” | (305 mm) Inside Dim. | 9828 |

## Channel Material

| | |
|---|---|
| Polymer Concrete (Polyester or Vinylester) | 9814, 9816, 9818, 9828, 9832, 9833, 9836 and 9837 |
| Fiberglass (Polyester or Vinylester) | 9810, 9812 |

## *Load Rating and Application Guide

| | |
|---|---|
| Pedestrians, Bicycles, Private Vehicles | 9810, 9812, 9814, 9816, 9818, 9828, 9832, 9833, 9836 and 9837 (with appropriate grating) |
| Passenger Cars, Vans (with appropriate grating) | 9810, 9812, 9814, 9816, 9818, 9828, 9832, 9833, 9836 and 9837 |
| Commercial Vehicles, Buses (with appropriate grating) | 9810, 9812, 9814, 9816, 9818, 9828, 9832, 9833, 9836 and 9837 |
| Pneumatic Tire Forklift Traffic (with appropriate grating) | 9810, 9812, 9814, 9816, 9818, 9828 and 9832 |
| Solid Tire Forklift Traffic (with appropriate grating) | 9810, 9812, 9816, 9818 and 9828 |
| Heavy and Industrial Vehicles, Tracked Vehicles | 9810, 9812, 9816, 9818 and 9828 (with appropriate grating) |
| Commercial and Military Aircraft (with appropriate grating) | 9828 |

*See pages 20-22 for appropriate grating for load class requirements.

# 6" Wide Channel Slope® Precast Polymer Concrete System, Flagship Figure 9818

The 9818 Channel Slope® Precast Polymer Concrete System is the **flagship** trench drain in the Jay R. Smith Mfg. Co.® Drainage Systems product line.

The 9818 is a sloped trench drain system which incorporates an integral cast-in metal rail edge design. This innovative concept provides reinforced edge protection for the polymer concrete channel and offers a striking and distinctive finished appearance.

The 9818 Channel utilizes QuickLock® cover grate and rail which protects the polymer concrete edge. A number of different cover grates with matching cast-in rails are available. When fitted with a heavy duty ductile iron cover or grate, 9818 can be recommended for infrequent hard wheel traffic of 10 ton wheel loads and up to load class "E" (135,000 lbs.)

Where visual effect is of paramount importance, Jay R. Smith Mfg. Co. Drainage Systems can supply cover grates and matching integral rails from its precious metal series. These include attractive galvanized or stainless steel rail edge. This important feature allows architects and designers to provide efficient surface water drainage while enhancing the visual appearance of projects such as shopping malls, major entry ways and other locations where aesthetic appearance is paramount.

Refer to pages 20 - 22 for complete drainage system grate information.

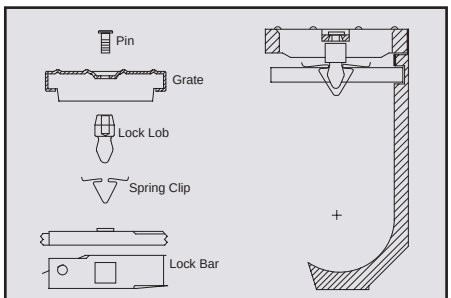


QuickLock® assembly components

Cross section with QuickLock®

Refer to page 16 for QuickLock® detail

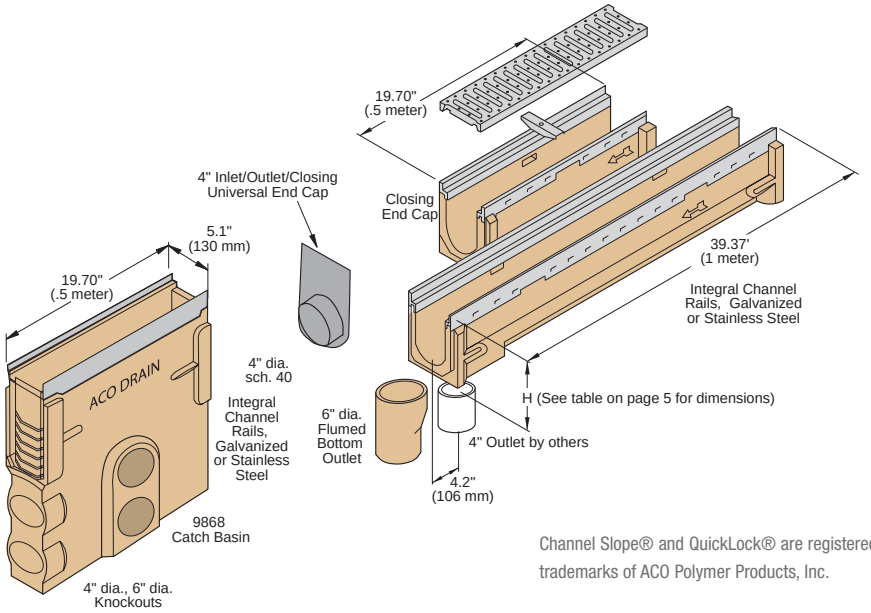


Channel Slope® and QuickLock® are registered trademarks of ACO Polymer Products, Inc.

# 9818 System Overview

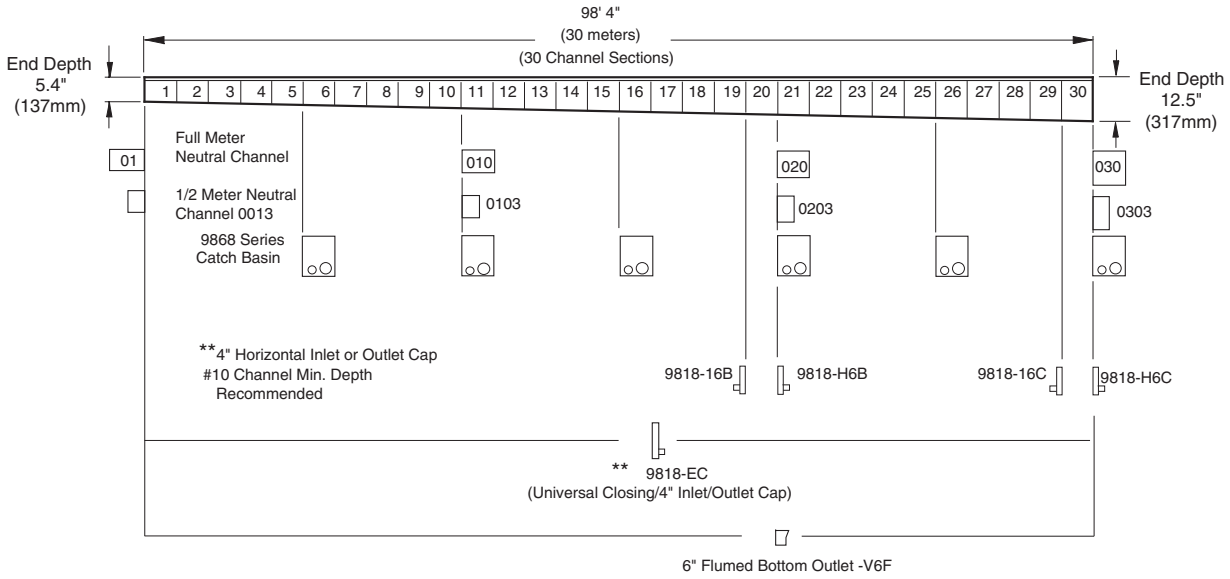


## Capacity and Deep End Depths 9818 System

| Channel Number | Deep End Depth* in. | mm | Slope | Holding Capacity (gallons) | Weight lbs. |
|---|---|---|---|---|---|
| 9818-100S-0013* | 5.4 | 137 | 0.0 | 1.0 | 15.0 |
| 9818-100S-01# | 5.4 | 137 | 0.0 | 2.0 | 29.0 |
| 9818-100S-1 | 5.7 | 145 | 0.6 | 2.3 | 31.0 |
| 9818-100S-2 | 5.9 | 151 | 0.6 | 2.6 | 31.0 |
| 9818-100S-3 | 6.2 | 157 | 0.6 | 2.6 | 32.0 |
| 9818-100S-4 | 6.4 | 163 | 0.6 | 2.7 | 34.0 |
| 9818-100S-5 | 6.7 | 169 | 0.6 | 2.9 | 34.0 |
| 9818-100S-6 | 6.9 | 175 | 0.6 | 3.0 | 35.0 |
| 9818-100S-7 | 7.1 | 181 | 0.6 | 3.2 | 37.0 |
| 9818-100S-8 | 7.3 | 187 | 0.6 | 3.4 | 39.0 |
| 9818-100S-9 | 7.6 | 193 | 0.6 | 3.5 | 39.0 |
| 9818-100S-10 | 7.8 | 199 | 0.6 | 3.7 | 41.0 |
| 9818-100S-010# | 7.8 | 199 | 0.0 | 3.6 | 39.0 |
| 9818-100S-0103* | 7.8 | 199 | 0.0 | 3.6 | 21.0 |
| 9818-100S-11 | 8.1 | 205 | 0.6 | 3.8 | 41.0 |
| 9818-100S-12 | 8.3 | 211 | 0.6 | 4.0 | 42.0 |
| 9818-100S-13 | 8.5 | 217 | 0.6 | 4.2 | 42.0 |
| 9818-100S-14 | 8.8 | 223 | 0.6 | 4.3 | 43.0 |
| 9818-100S-15 | 9.0 | 229 | 0.6 | 4.5 | 43.0 |
| 9818-100S-16 | 9.3 | 235 | 0.6 | 4.6 | 44.0 |
| 9818-100S-17 | 9.5 | 241 | 0.6 | 4.8 | 45.0 |
| 9818-100S-18 | 9.7 | 247 | 0.6 | 4.9 | 46.0 |
| 9818-100S-19 | 9.9 | 253 | 0.6 | 5.1 | 47.0 |
| 9818-100S-20 | 10.2 | 259 | 0.6 | 5.3 | 50.0 |
| 9818-100S-020# | 10.2 | 259 | 0.0 | 5.2 | 47.0 |
| 9818-100S-0203* | 10.2 | 259 | 0.0 | 5.2 | 26.0 |
| 9818-100S-21 | 10.4 | 265 | 0.6 | 5.4 | 52.0 |
| 9818-100S-22 | 10.7 | 271 | 0.6 | 5.6 | 52.0 |
| 9818-100S-23 | 10.9 | 277 | 0.6 | 5.7 | 53.0 |
| 9818-100S-24 | 11.1 | 283 | 0.6 | 5.9 | 53.0 |
| 9818-100S-25 | 11.4 | 289 | 0.6 | 6.1 | 54.0 |
| 9818-100S-26 | 11.6 | 295 | 0.6 | 6.2 | 54.0 |
| 9818-100S-27 | 11.8 | 301 | 0.6 | 6.4 | 55.0 |
| 9818-100S-28 | 12.1 | 307 | 0.6 | 6.5 | 55.0 |
| 9818-100S-29 | 12.3 | 313 | 0.6 | 6.7 | 55.0 |
| 9818-100S-30 | 12.6 | 319 | 0.6 | 6.9 | 56.0 |
| 9818-100S-030# | 12.5 | 317 | 0.0 | 6.8 | 55.0 |
| 9818-100S-0303* | 12.5 | 317 | 0.0 | 6.8 | 31.0 |

# Neutral Full Meter Channel
* Neutral Half Meter Channel

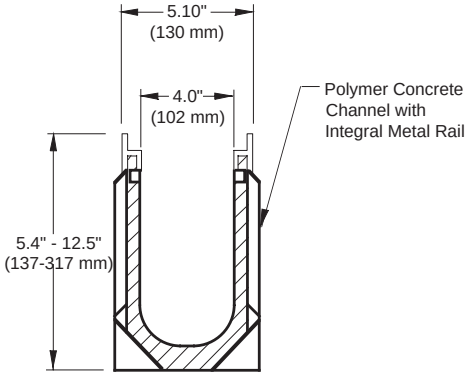


**CROSS SECTION DETAIL**

Note: This trench drainage system is designed for "on-grade" applications only, as there are no provisions for a flashing flange or flashing clamp.

# 6" Wide Channel Slope® Precast Polymer Concrete System, Figure 9814

Precision molded from durable polymer concrete, 9814 Channel Slope® System is the workhorse of the line. This precast system can be configured to accommodate a wide range of applications and site requirements.

Installation is quick and precise as the precast channels are joined via positive, interlocking tongue and groove ends. This reduces installation time and related costs.

The latest design has been engineered to provide the one meter length channels with improved security, reinforcement and flexibility for installation.

The 9814 utilizes the Quicklock® cover grate. Anchor ribs on the outside channel walls offer security against upward movement or shifting after installation. Inside the channel, reinforced locking areas protect against liquid buildup in surrounding concrete. A locking bar securely holds the cover grate in place.

Design flexibility is enhanced due to vertical 4" round or 6" flumed knockouts (all channels) and side knockouts to accept channels (half meter). These knockouts provide a wide range of vertical and horizontal evacuation points for on-site versatility during installation.

The system's 30 channels employ a built in 0.6% slope and radiused bottom. Neutral channels are available in full and half meter sizes to lengthen the system.

Jay R. Smith Mfg. Co.® Drainage Systems offer a line of cover grates and accessories engineered to fit securely with 9814 channels. Grate selection is determined by traffic conditions, chemical environments, hydraulic needs and aesthetic requirements. Refer to page 20 - 22 for drainage system grate information.

Accessories include catch basins, pipe and flumed outlets, installation and maintenance products are found on pages 18 and 23.

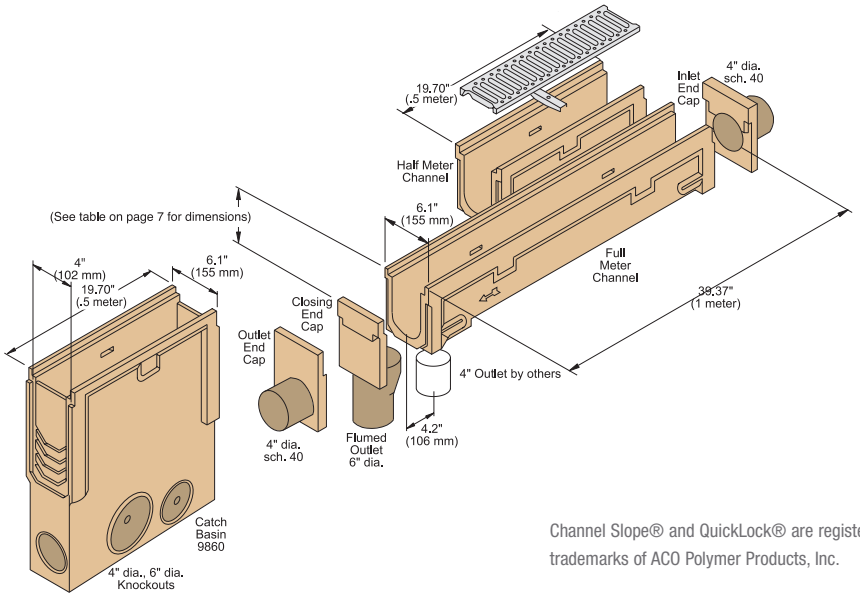


Channel Slope® and QuickLock® are registered trademarks of ACO Polymer Products, Inc.

# 9814 System Overview

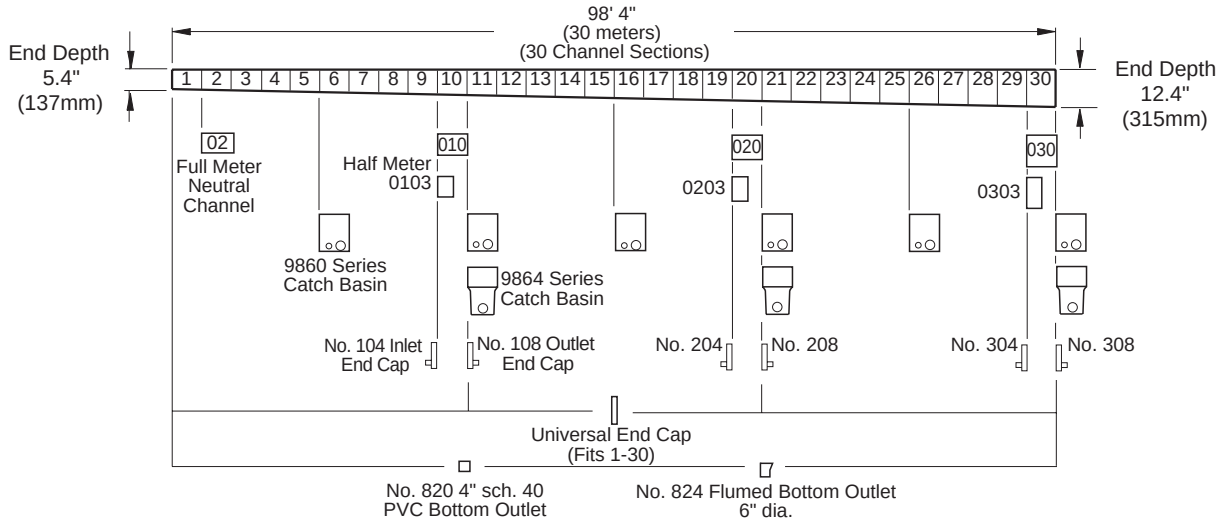


| Capacity and Deep End Depths 9814 System | | | | | |
|---|---|---|---|---|---|
| Channel Number | Deep End Depth in. | mm | Slope | Holding Capacity (gallons) | Weight lbs. |
| 9814-100-1 | 5.6 | 143 | 0.6 | 2.3 | 33.0 |
| 9814-100-02# | 5.6 | 143 | 0.0 | 2.3 | 33.0 |
| 9814-100-2 | 5.8 | 149 | 0.6 | 2.6 | 33.0 |
| 9814-100-3 | 6.0 | 155 | 0.6 | 2.6 | 35.0 |
| 9814-100-4 | 6.3 | 161 | 0.6 | 2.7 | 35.0 |
| 9814-100-5 | 6.5 | 167 | 0.6 | 2.9 | 36.0 |
| 9814-100-6 | 6.7 | 173 | 0.6 | 3.0 | 36.0 |
| 9814-100-7 | 7.0 | 179 | 0.6 | 3.2 | 38.0 |
| 9814-100-8 | 7.2 | 185 | 0.6 | 3.4 | 40.0 |
| 9814-100-9 | 7.4 | 191 | 0.6 | 3.5 | 41.0 |
| 9814-100-010# | 7.4 | 191 | 0.0 | 3.6 | 42.0 |
| 9814-100-0103* | 7.4 | 191 | 0.0 | 1.8 | 22.0 |
| 9814-100-10 | 7.7 | 197 | 0.6 | 3.7 | 43.0 |
| 9814-100-11 | 7.9 | 203 | 0.6 | 3.8 | 44.0 |
| 9814-100-12 | 8.1 | 209 | 0.6 | 4.0 | 44.0 |
| 9814-100-13 | 8.4 | 215 | 0.6 | 4.2 | 45.0 |
| 9814-100-14 | 8.6 | 221 | 0.6 | 4.3 | 46.0 |
| 9814-100-15 | 8.9 | 227 | 0.6 | 4.5 | 47.0 |
| 9814-100-16 | 9.1 | 233 | 0.6 | 4.6 | 48.0 |
| 9814-100-17 | 9.3 | 239 | 0.6 | 4.8 | 49.0 |
| 9814-100-18 | 9.6 | 245 | 0.6 | 4.9 | 50.0 |
| 9814-100-19 | 9.8 | 251 | 0.6 | 5.1 | 51.0 |
| 9814-100-020# | 9.8 | 251 | 0.0 | 5.2 | 52.0 |
| 9814-100-0203* | 9.8 | 251 | 0.0 | 2.6 | 27.0 |
| 9814-100-20 | 10.0 | 257 | 0.6 | 5.3 | 53.0 |
| 9814-100-21 | 10.3 | 263 | 0.6 | 5.4 | 54.0 |
| 9814-100-22 | 10.5 | 269 | 0.6 | 5.6 | 55.0 |
| 9814-100-23 | 10.7 | 275 | 0.6 | 5.7 | 56.0 |
| 9814-100-24 | 11.0 | 281 | 0.6 | 5.9 | 56.0 |
| 9814-100-25 | 11.2 | 287 | 0.6 | 6.1 | 58.0 |
| 9814-100-26 | 11.5 | 293 | 0.6 | 6.2 | 58.0 |
| 9814-100-27 | 11.7 | 299 | 0.6 | 6.4 | 59.0 |
| 9814-100-28 | 11.9 | 305 | 0.6 | 6.5 | 59.0 |
| 9814-100-29 | 12.2 | 311 | 0.6 | 6.7 | 59.0 |
| 9814-100-030# | 12.2 | 311 | 0.0 | 6.8 | 59.0 |
| 9814-100-0303* | 12.2 | 311 | 0.0 | 3.4 | 32.0 |
| 9814-100-30 | 12.5 | 317 | 0.6 | 6.9 | 60.0 |

# Neutral Full Meter Channel
* Neutral Half Meter Channel

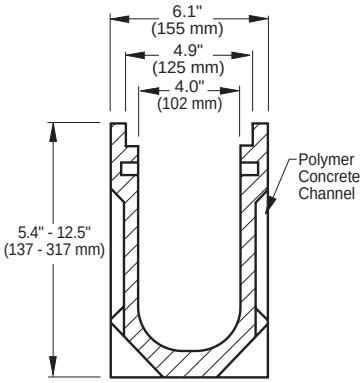


**CROSS SECTION DETAIL**

Note: This trench drainage system is designed for "on-grade" applications only, as there are no provisions for a flashing flange or flashing clamp.

# 6" Wide Channel Slope® Extra Heavy Duty Polymer Concrete System, Figure 9816

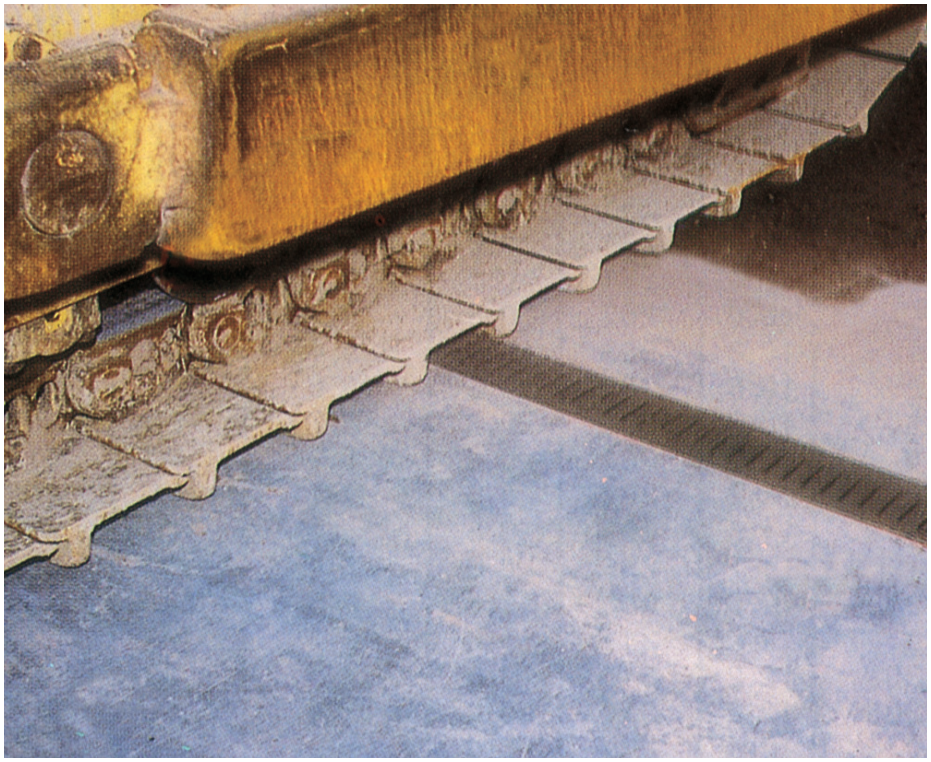

This extra heavy duty version of the 9814 system incorporates a ductile iron frame and grate. Recommended for situations requiring an extra heavy duty, fully sloped channel system, 9816 provides the perfect drainage solution. This system is capable of handling solid tire traffic and provides high resistance against impact from steel containers, struts and metal wheels.

The sturdy ductile iron framework will also accept any of the 9814 cast or ductile iron gratings or covers to meet specific site requirements. Refer to pages 21 and 22 for drainage system grate information.

The frame adds an additional height of 1.1" (28 mm) to channel units. See chart on the next page for details of channel depth, system design and holding capacity.

Supplied with concrete anchors that tie the ductile iron frames into the surrounding concrete. The 9816 series grates are specially designed to prevent longitudinal or lateral movement.

To provide additional finishing detail, end frames are available for each end of channel run. The complete line of 9814 accessories is available for use with the 9816 system.

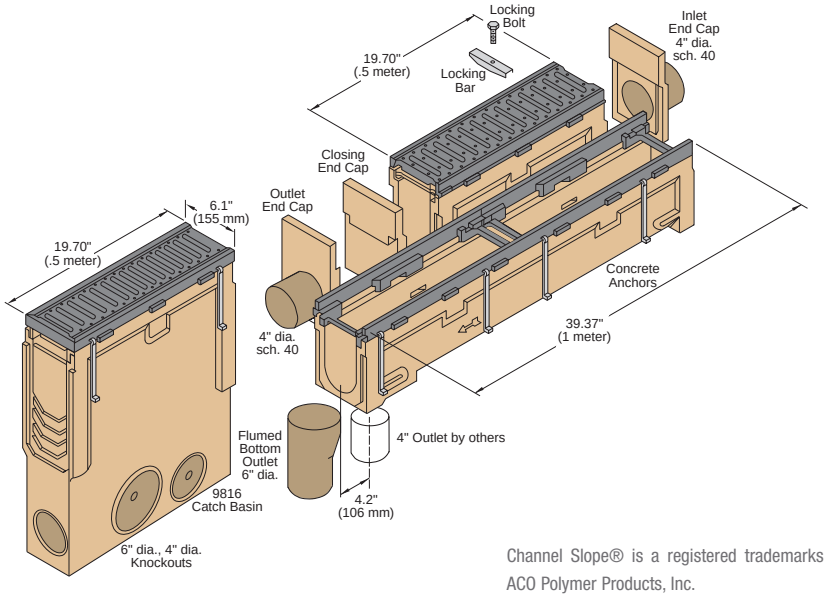


Channel Slope® is a registered trademarks of ACO Polymer Products, Inc.

# 9816 System Overview

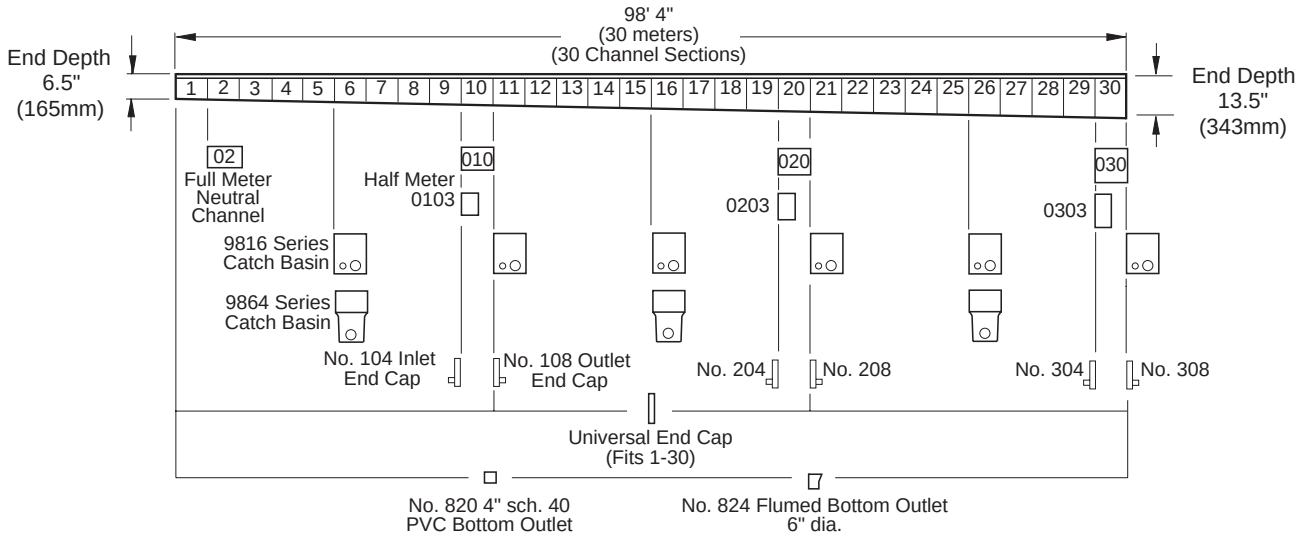


| Capacity and Deep End Depths 9816 System | | | | |
|---|---|---|---|---|
| Channel Number | Deep End Depth in. | mm | Slope | Holding Capacity (gallons) |
| 9816-475-1 | 6.7 | 171 | 0.6 | 2.7 |
| 9816-475-02# | 6.7 | 171 | 0.0 | 2.7 |
| 9816-475-2 | 6.9 | 177 | 0.6 | 3.0 |
| 9816-475-3 | 7.1 | 183 | 0.6 | 3.0 |
| 9816-475-4 | 7.4 | 189 | 0.6 | 3.1 |
| 9816-475-5 | 7.6 | 195 | 0.6 | 3.3 |
| 9816-475-6 | 7.8 | 201 | 0.6 | 3.4 |
| 9816-475-7 | 8.1 | 207 | 0.6 | 3.6 |
| 9816-475-8 | 8.3 | 213 | 0.6 | 3.8 |
| 9816-475-9 | 8.5 | 219 | 0.6 | 3.9 |
| 9816-475-010# | 8.5 | 219 | 0.0 | 4.0 |
| 9816-475-0103* | 8.5 | 219 | 0.0 | 2.0 |
| 9816-475-10 | 8.8 | 225 | 0.6 | 4.1 |
| 9816-475-11 | 9.0 | 231 | 0.6 | 4.2 |
| 9816-475-12 | 9.2 | 237 | 0.6 | 4.4 |
| 9816-475-13 | 9.5 | 243 | 0.6 | 4.6 |
| 9816-475-14 | 9.7 | 249 | 0.6 | 4.7 |
| 9816-475-15** | 10.0 | 255 | 0.6 | 4.9 |
| 9816-475-16 | 10.2 | 261 | 0.6 | 5.0 |
| 9816-475-17 | 10.4 | 267 | 0.6 | 5.2 |
| 9816-475-18 | 10.7 | 273 | 0.6 | 5.3 |
| 9816-475-19 | 10.9 | 279 | 0.6 | 5.5 |
| 9816-475-020# | 10.9 | 279 | 0.0 | 5.6 |
| 9816-475-0203* | 10.9 | 279 | 0.0 | 2.8 |
| 9816-475-20 | 11.1 | 285 | 0.6 | 5.7 |
| 9816-475-21 | 11.4 | 291 | 0.6 | 5.8 |
| 9816-475-22 | 11.6 | 297 | 0.6 | 6.0 |
| 9816-475-23 | 11.8 | 303 | 0.6 | 6.1 |
| 9816-475-24 | 12.1 | 309 | 0.6 | 6.3 |
| 9816-475-25** | 12.3 | 315 | 0.6 | 6.4 |
| 9816-475-26 | 12.6 | 321 | 0.6 | 6.6 |
| 9816-475-27 | 12.8 | 327 | 0.6 | 6.8 |
| 9816-475-28 | 13.0 | 333 | 0.6 | 6.9 |
| 9816-475-29 | 13.3 | 338 | 0.6 | 7.1 |
| 9816-475-030# | 13.3 | 338 | 0.0 | 7.2 |
| 9816-475-0303* | 13.3 | 338 | 0.0 | 3.6 |
| 9816-475-30 | 13.5 | 345 | 0.6 | 7.3 |

# Neutral Full Meter Channel
* Neutral Half Meter Channel
** Indicates outlet depth compatible with 9864 Series Catch Basins

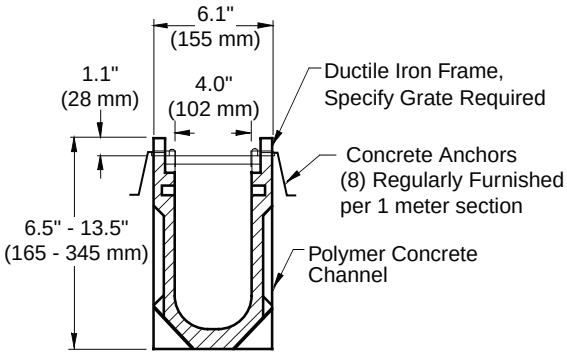


**CROSS SECTION DETAIL**

The end depths include grate frame of 1.1 inches (28 mm)

Note: This trench drainage system is designed for "on-grade" applications only, as there are no provisions for a flashing flange or flashing clamp.

# 12" Wide Channel Brute Extra Heavy Duty Polymer Concrete System, Figure 9828

The Jay R. Smith Mfg. Co.® 9828 Channel Brute Drainage System is a wider, high capacity version of our 9816 extra heavy duty polymer concrete system. The 9828 system is a pre-manufactured trench drain system with 12" of internal width and integral ductile iron rails. The channel in combination with our secured ductile iron slotted grate is rated for DIN 19580 Load Class "F" for 202,320 pound loads. The grate is secured with eight high strength bolts to the ductile iron frame.

The Channel Brute System is available in two neutral depths and 20 interlocking, 0.6% pre-sloped channels. The shallowest channel is 13.06" and the deepest is 17.81". The 9828 system is available in one meter (3.28') sections. A closing end cap and a horizontal outlet caps provide for a complete drainage system. All channel sections are provided with a vertical performed knockout of 6" and 8" outlet discharge.

Channel Brute System is designed for extra heavy-duty installations such as airports, bus depots, military bases, warehouses, service stations, highways, and other industrial areas. Strengthening ribs on the channel sides create a stronger and safer system capable of withstanding the considerable loading imposed by the turning action of heavy wheeled vehicles. Side profiling also provides anchoring to the surrounding concrete to prevent movement due to freeze-thaw cycles.

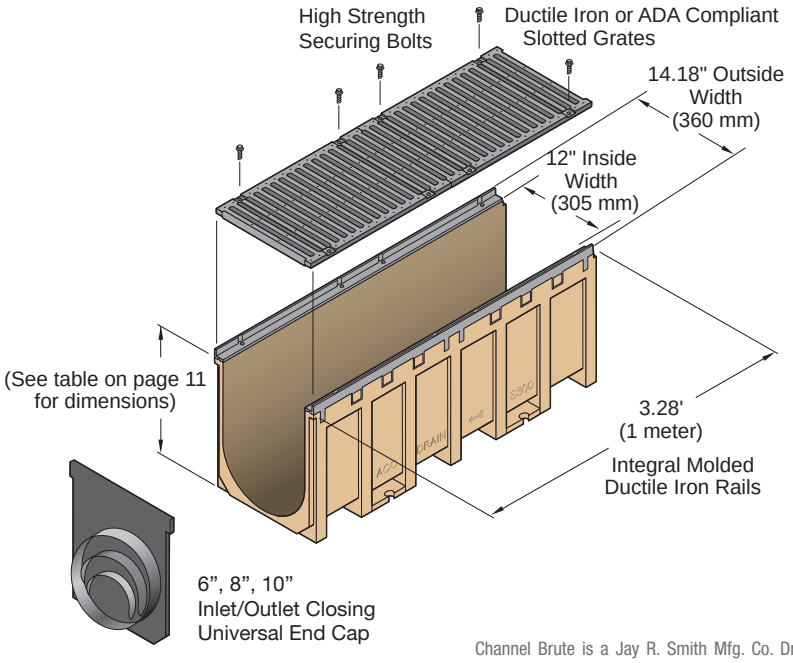


Channel Brute is a Jay R. Smith Mfg. Co. Drainage System product.

# 9828 System Overview

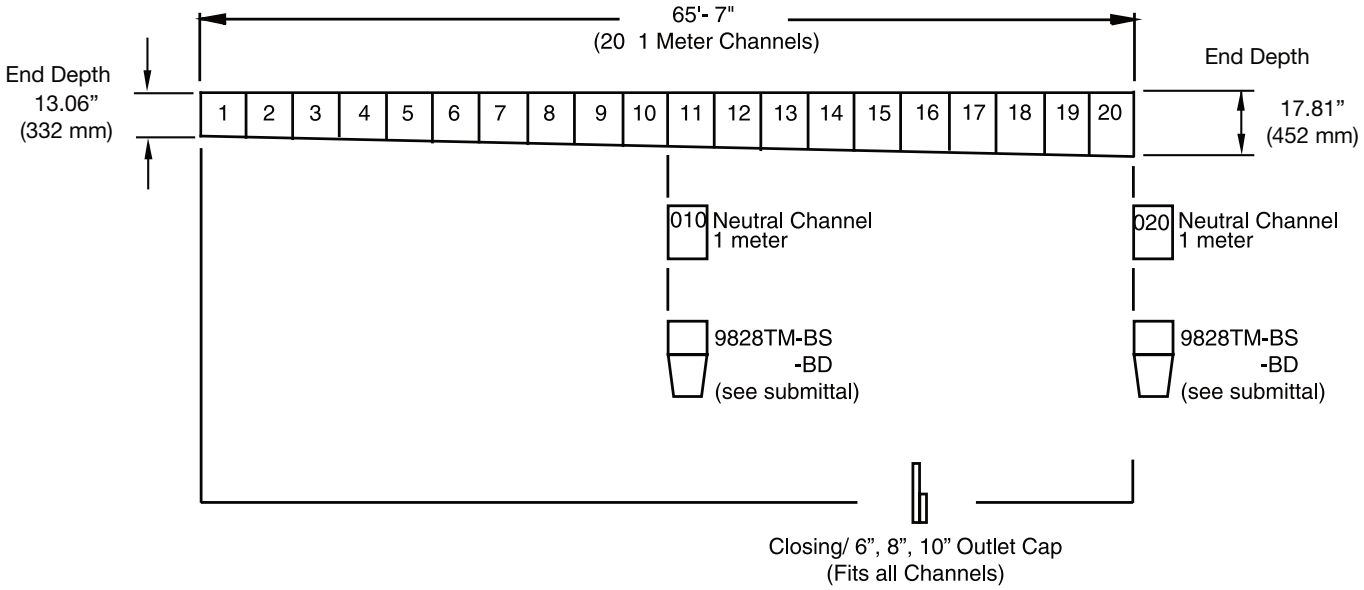


| Channel Number | Deep End Depth in. | mm | Slope | Channel Length | Weight lbs. Channel w/Grates |
|---|---|---|---|---|---|
| 9828-S300-1 | 13.31 | 338 | 0.6 | 39.37/1m | 217 |
| 9828-S300-2 | 13.54 | 344 | 0.6 | 39.37/1m | 218 |
| 9828-S300-3 | 13.78 | 350 | 0.6 | 39.37/1m | 219 |
| 9828-S300-4 | 14.01 | 356 | 0.6 | 39.37/1m | 220 |
| 9828-S300-5 | 14.25 | 362 | 0.6 | 39.37/1m | 221 |
| 9828-S300-6 | 14.49 | 368 | 0.6 | 39.37/1m | 222 |
| 9828-S300-7 | 14.72 | 374 | 0.6 | 39.37/1m | 223 |
| 9828-S300-8 | 14.96 | 380 | 0.6 | 39.37/1m | 224 |
| 9828-S300-9 | 15.20 | 386 | 0.6 | 39.37/1m | 225 |
| 9828-S300-10 | 15.43 | 392 | 0.6 | 39.37/1m | 226 |
| 9828-S300-010 | 15.43 | 392 | 0.0 | 39.37/1m | 227 |
| 9828-S300-11 | 15.67 | 398 | 0.6 | 39.37/1m | 227 |
| 9828-S300-12 | 15.91 | 404 | 0.6 | 39.37/1m | 228 |
| 9828-S300-13 | 16.14 | 410 | 0.6 | 39.37/1m | 230 |
| 9828-S300-14 | 16.38 | 416 | 0.6 | 39.37/1m | 231 |
| 9828-S300-15 | 16.61 | 422 | 0.6 | 39.37/1m | 232 |
| 9828-S300-16 | 16.85 | 428 | 0.6 | 39.37/1m | 233 |
| 9828-S300-17 | 17.09 | 434 | 0.6 | 39.37/1m | 234 |
| 9828-S300-18 | 17.32 | 440 | 0.6 | 39.37/1m | 235 |
| 9828-S300-19 | 17.56 | 446 | 0.6 | 39.37/1m | 236 |
| 9828-S300-20 | 17.81 | 452 | 0.6 | 39.37/1m | 238 |
| 9828-S300-020 | 17.81 | 452 | 0.0 | 39.37/1m | 238 |

**NOTE:** To calculate invert dimension on deep end of the channel, subtract 1.12" (28mm) from deep end depth shown in above table.

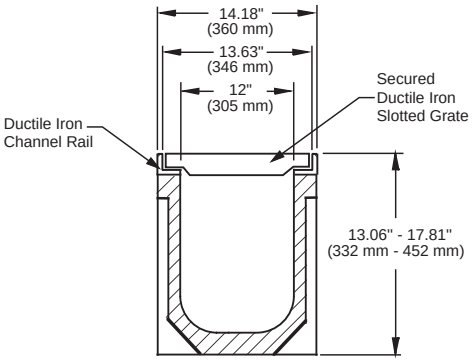


**CROSS SECTION DETAIL**

Note: All channels provided with vertical preformed knock out position for 6" (152 mm) and 8" (203 mm) outlet discharge.

Note: This trench drainage system is designed for "on-grade" applications only, as there are no provisions for a flashing flange or flashing clamp.

# 6" Wide Advanced Hydraulic Presloped Fiberglass Trench System, Figure 9810

Jay R. Smith Mfg. Co.® Drainage Systems offers a revolutionary concept in presloped drainage channels - 9810 System. The 9810 utilizes sophisticated hydraulics to maximize the use of each radiused bottom channel. The 9810 System is composed of 10 sloped and 6 neutral channels: (3) 3 meters (9 feet, 10 inches) in length, and (3) 1 meter (3 feet, 3 inches) in length.

The channels have a 1.0% slope to increase the velocity of the liquid flow. In comparison to conventional 4 inch width uniformly sloped systems, 9810 provides approximately 20% higher flow capacity and velocity. This is a substantial benefit in large applications where high capacity is a concern.

Channels are available in both high performance polyester and vinylester fiberglass and provide resistance to a variety of corrosive elements. This offers minimum maintenance costs and long service life to systems even in extreme chemical environments.

Channels are molded precisely with a smooth finish and are color coded for both material types. Polyester units are tan and vinylester units are gray: both are marked with flow direction arrows and progressive channel numbers. Male/female channel ends form high integrity lap joints.

The lightweight channels are easily assembled to the grate frame. Each channel is fitted with a "Z" profile, coated steel, galvanized or stainless steel frame, depending on the application. The grate frames are available in 3 meter and 1 meter lengths. The labor savings compared to shorter, heavier systems is substantial.

Jay R. Smith Mfg. Co. Drainage Systems offer a line of grates and covers engineered to fit securely with 9810 channels which come equipped with QuickLock® locking device. Grates are selected based on traffic conditions, chemical environments, hydraulic needs and aesthetic requirements. Refer to pages 20 through 22 for complete drainage system grate information.

Accessories include bottom vertical outlet units, catch basins, outlet caps. The accessories are easily custom fit to the channel layout with on-site fabrications, providing maximum flexibility to designer and installer.

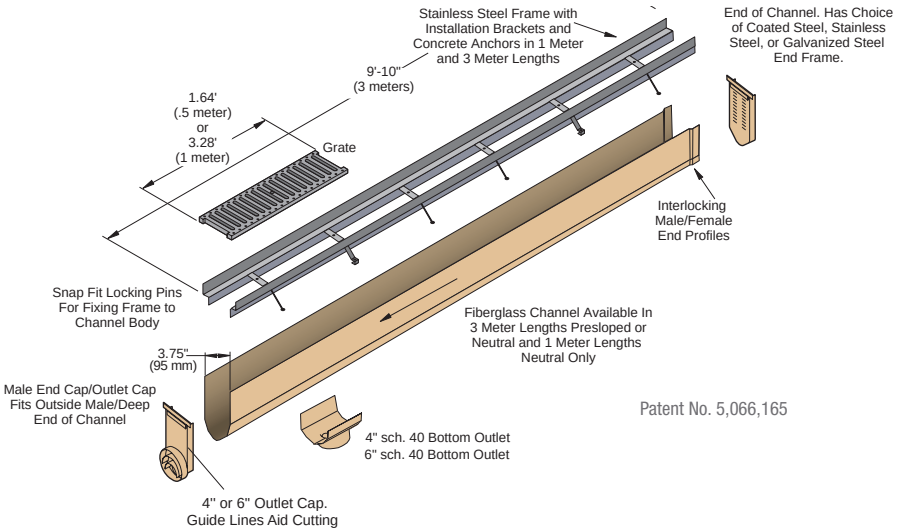


Patent No. 5,066,165

# 9810 System Overview

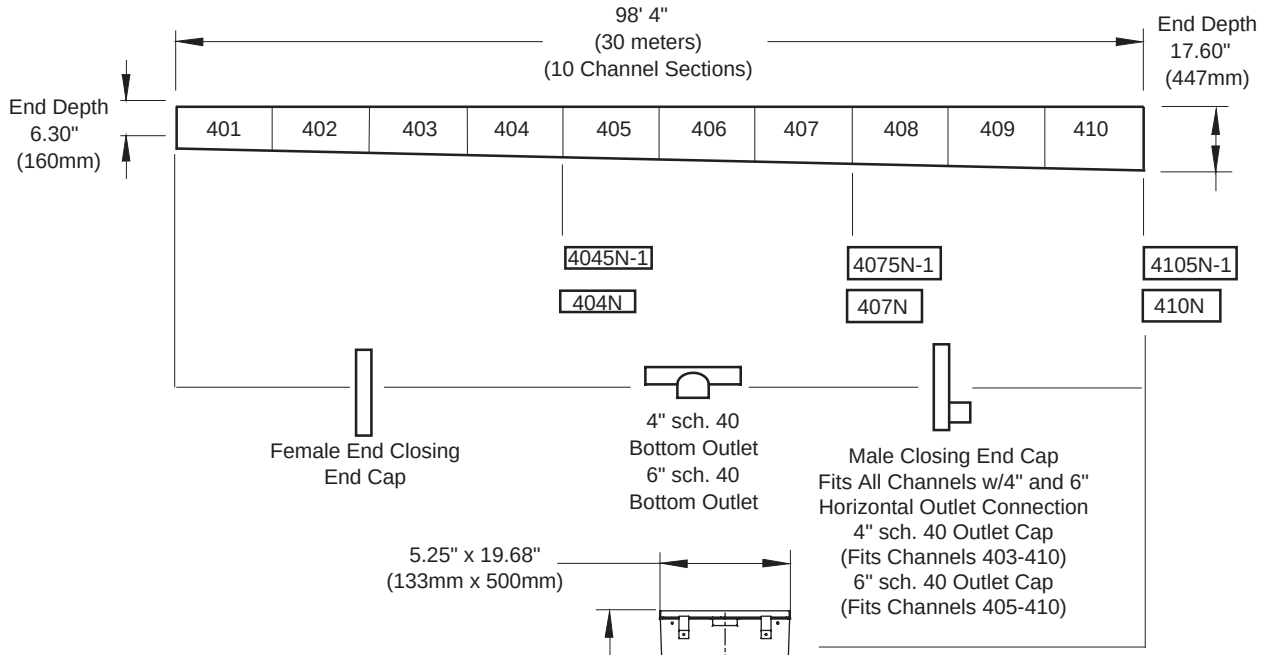


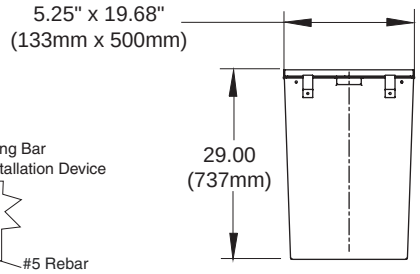


9810-CB4 In-Line Catch Basin

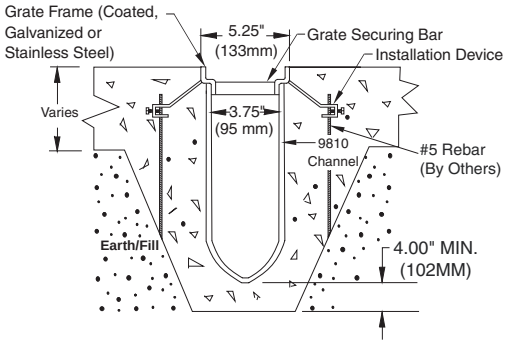


TYPICAL INSTALLATION CROSS SECTION

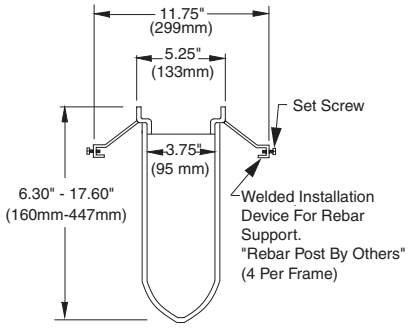


CROSS SECTION DETAIL

Note: This trench drainage system is designed for "on-grade" applications only, as there are no provisions for a flashing flange or flashing clamp.

**Deep End Depths 9810 System**

| Channel Number | Deep End Depth in. | mm | Slope % |
|---|---|---|---|
| 401 | 7.43 | 189 | 1.0 |
| 402 | 8.56 | 217 | 1.0 |
| 403 | 9.69 | 246 | 1.0 |
| 404 | 10.82 | 275 | 1.0 |
| #404N | 10.82 | 275 | 0.0 |
| ##4045N-1 | 10.82 | 275 | 0.0 |
| 405 | 11.95 | 304 | 1.0 |
| 406 | 13.08 | 332 | 1.0 |
| 407 | 14.12 | 361 | 1.0 |
| #407N | 14.12 | 361 | 0.0 |
| ##4075N-1 | 14.12 | 361 | 0.0 |
| 408 | 15.34 | 390 | 1.0 |
| 409 | 16.47 | 418 | 1.0 |
| 410 | 17.60 | 447 | 1.0 |
| #410N | 17.60 | 447 | 0.0 |
| ##4105N-1 | 17.60 | 447 | 0.0 |

NOTE: Depths are top of grate to invert.
# 3 meter Neutral Channel
## 1 meter Neutral Channel

# 10" Wide High Capacity Presloped Fiberglass Trench System, Figure 9812

Jay R. Smith Mfg. Co.® Drainage Systems now provides the industry with a precision engineered solution for high capacity drainage requirements.

The 9812 System combines high strength, corrosion resistant polyester (tan) or vinylester (gray) fiberglass with an innovative design. Channels have an 8" internal width with the additional feature of a built-in slope of 1.0%.

These features promote quick evacuation of large volumes of standing or surface liquids. The wider interior width allows not only for increased hydraulic capacity but also for an efficient means of handling solids.

The system's twelve sloped channels are each nine feet in length and channel depth varies from 6.88 to 20.38 inches. Four neutral nine foot channels and four neutral three foot channels are available to lengthen the system.

The lightweight channel design of the 9812 System allows for exceptionally rapid installation. The heaviest nine foot channel and grate frame assembly is easily handled since it weighs only 81 pounds. Prior to installation, each channel is fitted with a frame using fourteen plastic push pins. The 9812 frame is equipped with concrete anchors (one pair per every 18 inches).

Frames are available in 3 or 9 foot lengths, allowing channel units to be installed in these lengths. Cast iron slotted grating is recommended for heavy duty pneumatic tire traffic and ductile iron slotted grating is recommended for extra heavy duty solid tire traffic applications. These 18 inch grates are securely locked to the sturdy grate frame with two stainless steel 1/2" bolts. For lighter duty applications, galvanized or stainless steel bar grating can be provided based on mechanical or chemical requirements. These three foot grates are locked down to the frame with four socket head bolts per grate. For extreme chemical conditions, vinylester fiberglass bar grating is available in three foot lengths. Refer to page 22 for 9812 Series grating information.

Accessory components include catch basins, universal end caps, universal outlet caps, 4", 6" and 8" bottom outlets to provide a high degree of flexibility when designing the system. Custom outlets are available upon customer request.

The 9812 Catch Basin comes with coated steel frame and ductile iron grate. These basins may be used with any channel section to serve as an outlet point for the trench system. Knockouts to accept trench inlets are easily fabricated in the catch basin walls on the job site.

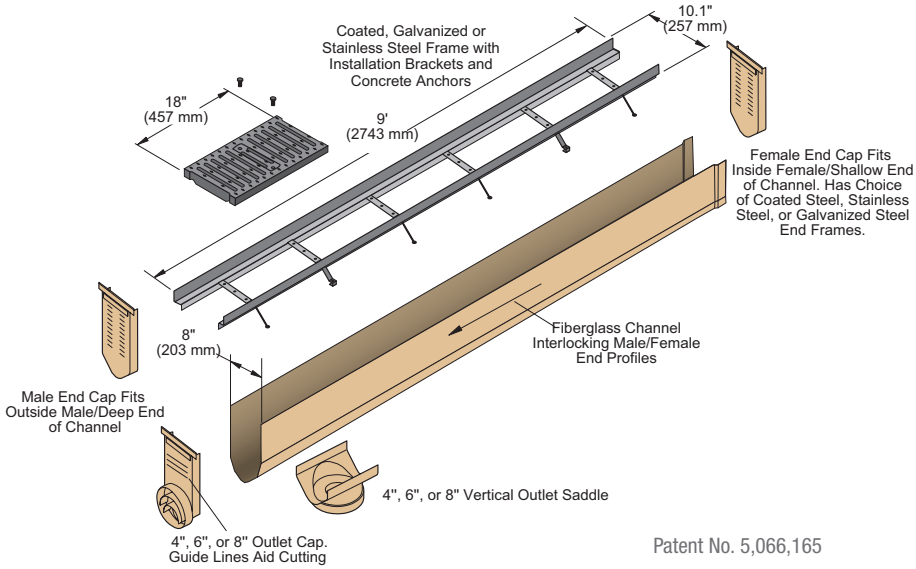


Patent No. 5,066,165

# 9812 System Overview

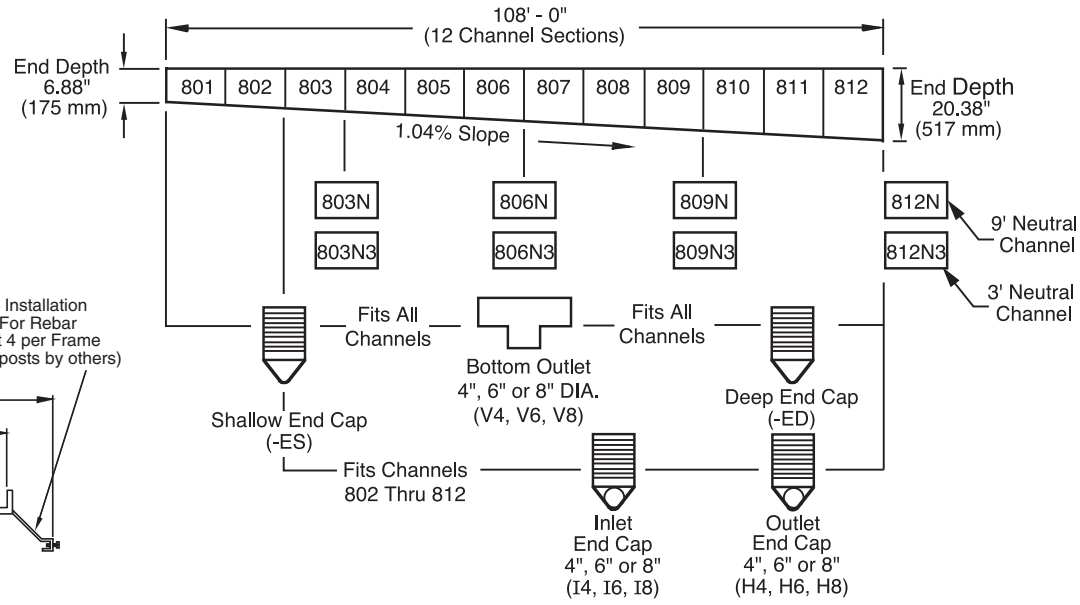


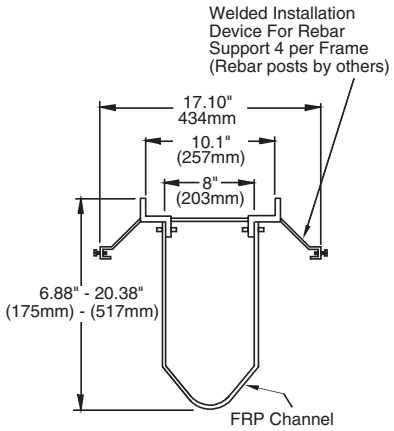


**CROSS SECTION DETAIL**

- The end depths include grate frame of 1.5 inches (38 mm.).

Note: This trench drainage system is designed for "on-grade" applications only, as there are no provisions for a flashing flange or flashing clamp.

**Deep End Depths 9812 System**

| | Channel Number | Deep End Depths* in . | mm | Holding Capacity (gallons) |
|---|---|---|---|---|
| | 9812-801 | 8.00 | 203 | 18.37 |
| | 9812-802 | 9.13 | 232 | 22.58 |
| | 9812-803 | 10.25 | 260 | 26.79 |
| ** | 9812-803N | 10.25 | 260 | 28.80 |
| *** | 9812-803N3 | 10.25 | 260 | 9.60 |
| | 9812-804 | 11.38 | 289 | 31.00 |
| | 9812-805 | 12.50 | 317 | 35.21 |
| | 9812-806 | 13.63 | 346 | 39.42 |
| ** | 9812-806N | 13.63 | 346 | 41.50 |
| *** | 9812-806N3 | 13.63 | 346 | 13.83 |
| | 9812-807 | 14.75 | 374 | 43.63 |
| | 9812-808 | 15.88 | 403 | 47.84 |
| | 9812-809 | 17.00 | 432 | 52.05 |
| ** | 9812-809N | 17.00 | 432 | 54.10 |
| *** | 9812-809N3 | 17.00 | 432 | 18.00 |
| | 9812-810 | 18.13 | 460 | 56.26 |
| | 9812-811 | 19.25 | 489 | 60.47 |
| | 9812-812 | 20.38 | 517 | 64.68 |
| ** | 9812-812N | 20.38 | 517 | 66.76 |
| *** | 9812-812N3 | 20.38 | 517 | 22.25 |

**Outlet Cap Flow Rates**

| Outlet Size | Channel | Invert Depth | GPM | CFS |
|---|---|---|---|---|
| 4" Vertical | 801 | 7.88 (200) | 154 | 0.34 |
| 4" Vertical | 812 | 20.25 (514) | 246 | 0.54 |
| 6" Vertical | 801 | 7.88 (200) | 346 | 0.77 |
| 6" Vertical | 812 | 20.25 (514) | 553 | 1.23 |
| 8" Vertical | 801 | 7.88 (200) | 616 | 1.37 |
| 8" Vertical | 812 | 20.25 (514) | 982 | 2.18 |
| 4" Horizontal | 802 | 9.00 (229) | 145 | 0.33 |
| 4" Horizontal | 812 | 20.25 (514) | 233 | 0.54 |
| 6" Horizontal | 803 | 10.13 (257) | 330 | 0.76 |
| 6" Horizontal | 812 | 20.25 (514) | 510 | 1.17 |
| 8" Horizontal | 805 | 12.38 (314) | 635 | 1.46 |
| 8" Horizontal | 812 | 20.25 (514) | 880 | 2.03 |

Dim's in ( ) are mm.

** 9' Long Neutral Channel
*** 3' Long Neutral Channel

## 9818 Series QuickLock® assembly and removal of the cover grate is easier than ever.

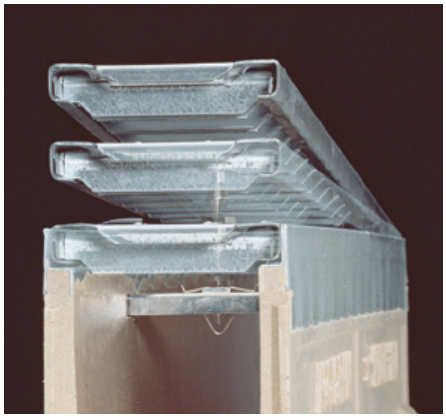

QuickLock® is a revolutionary grate locking system designed to improve accessibility to the channels for cleaning and maintenance. QuickLock® replaces the standard bolt and bar locking device used in many other trench drain systems.

The factory assembled components that make up the QuickLock® locking system include a glass nylon grate stud and a stainless steel spring clip type locking bar. (See page 4 for illustration).

QuickLock® is a registered trademark of ACO Polymer Products, Inc.

| Grating Available with QuickLock® | Load Class "A" | Load Class "C" | Load Class "E" |
|---|---|---|---|
| 9870-410-GP | • | | |
| 9870-420-G | • | | |
| 9870-445-SSADA | • | | |
| 9870-450-SS | • | | |
| 9870-451-SSPA | • | | |
| 9870-494-PADAB | • | | |
| 9870-494-PADAG | • | | |
| 9870-494-PADABR | • | | |
| 9870-494-PADAGR | • | | |
| 9870-405-GM | | • | |
| 9870-411GPHD | | • | |
| 9870-416-GS | | • | |
| 9870-425-GHD | | • | |
| 9870-430-SSM | | • | |
| 9870-455-SSHD | | • | |
| 9870-465-SSP | | • | |
| 9870-479-MD | | • | |
| 9870-485-PB | | • | |
| 9870-492-RC | | • | |
| 9870-435-GHDE | | | • |
| 9870-461-M | | | • |
| 9870-477-ADA | | | • |
| 9870-477-ML | | | • |
| 9870-490-SSHDE | | | • |

## Assembly and Removal

QuickLock® components are preassembled to the gratings and only the locking bar must be fit into place by the installer. The locking bar holds itself into the channel's locking pockets with tension side grips which can be released with a flat blade screwdriver. Removing the grates for channel cleaning is simple once the first grate is pulled out. A grate lifting tool, 9859 Quicklock® hook, is offered for safe removal.

The spring clip in the locking bar is designed to allow centering of the grates for final positioning.

The locking force is sufficient to hold grates in place up to load Class E.

There is no need for tools to fasten the grate into the channel. The grate snaps into place with a quick impact.

## 9859 QuickLock® Hook

The 9859 QuickLock® hook is designed to ease the removal of grates from trench drainage system using the QuickLock® securing method.

## 9832 Shallow Channel Systems

Note: This trench drainage system is designed for "on-grade" applications only, as there are no provisions for a flashing flange or flashing clamp.

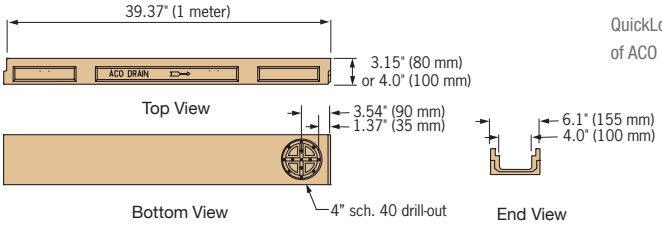


QuickLock® is a registered trademark of ACO Polymer Products, Inc.

The 9832 Shallow Channel Systems provide a cost effective solution in applications where surface drainage or ducting is needed but installation depth is restricted. 9832 Shallow Channel Systems (Channels #080 and #0100) consist of two depths, 3.15" and 4.0" (80 mm and 102 mm).

Made from high strength polyester or vinylester concrete, these units are lightweight and easy to install. Each channel has a groove profile to assist with alignment during installation.

All of the standard QuickLock® cover grates can be utilized with the 9832 Shallow Channel Systems. Refer to pages 20 - 22 for complete drainage system grate information. Closing end caps are also available.

## 9836 Shallow Channel with Rails

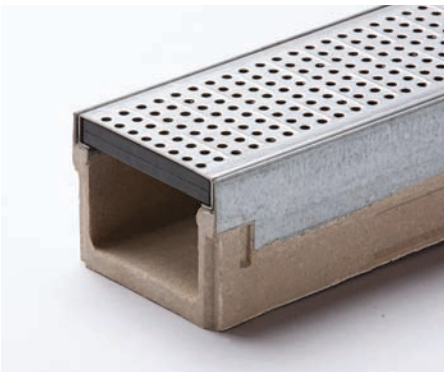

Note: This trench drainage system is designed for "on-grade" applications only, as there are no provisions for a flashing flange or flashing clamp.

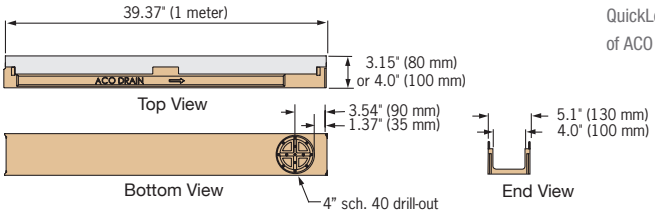


QuickLock® is a registered trademark of ACO Polymer Products, Inc.

In general, the 9836 Shallow Channel Systems are identical to the 9832 systems but incorporate an integrally molded galvanized steel or stainless steel edge rail for applications up to DIN load class E.

Also made from high strength polyester or vinylester concrete, these units are lightweight and easy to install. Each channel has a groove profile to assist with alignment during installation.

All of the standard QuickLock® cover grates can be utilized with the 9836 Shallow Channel Systems. Refer to pages 20 - 22 for complete drainage system grate information. Closing end caps in galvanized steel or stainless steel are also available. A 4.00 drill out is located on the bottom of each channel to fit schedule 40 PVC piping. (supplied by others)

## 9837 Membrane Drain

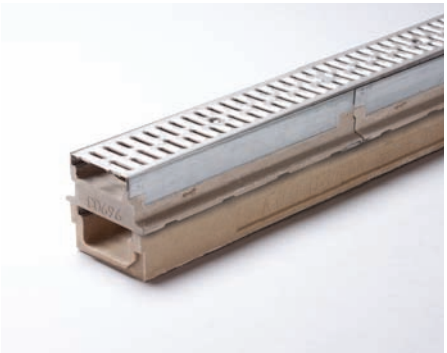

This trench drain is not intended for use above occupied spaces.

Channel Slope® is a registered trademark of ACO Polymer Products, Inc.

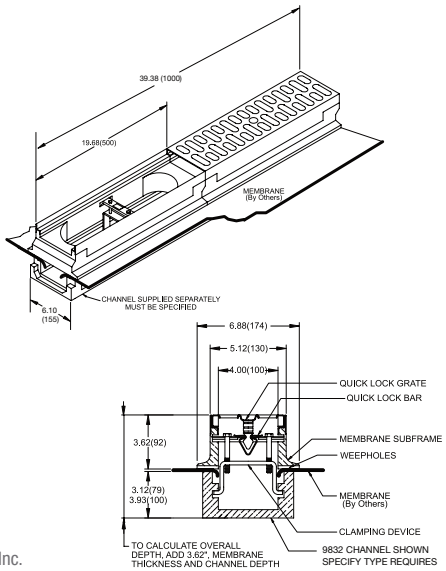


The 9837 Membrane Drain Waterproofing System is designed specifically for use in suspended slabs where any liquid permeating through the concrete is collected by a membrane and directed back into the trench drain via weepholes.

A pair of polymer concrete membrane clamping subframes are placed on top of either 9832 or the 9814 channel system after the membrane is laid and the channel and the subframes are clamped together with a metal clamping device, essentially sandwiching the membrane in between.

The subframes are available with galvanized steel or stainless steel edge rails. Loading is determined by the grating up to DIN load class C.

# 9833 MINIKLASSIC Narrow Channel, 9857 Oil Separator and 9846 Sump Boxes

## 9833 MINIKLASSIC Narrow Channel

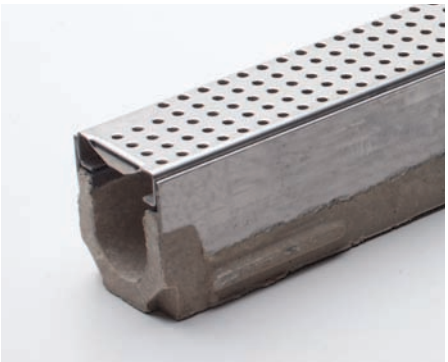

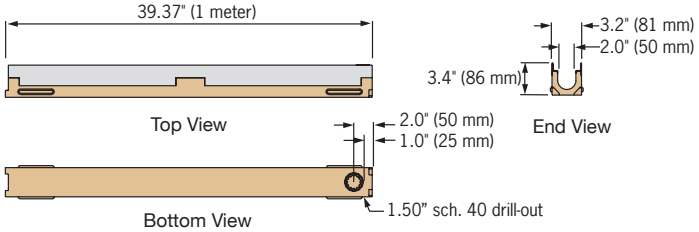


Note: This trench drainage system is designed for "on-grade" applications only, as there are no provisions for a flashing flange or flashing clamp.

The 9833 MiniKlassic Narrow Channel System is a 2" internal width system for high profile aesthetic applications where a barrier is required to separate wet and dry areas.

Made from high strength polyester polymer concrete, these units are available with integrally molded galvanized steel or stainless steel edge rails, which protect the channel edge from damage. 1.50" SCH 40 drill out allows vertical drainage of run at any point.

A choice of grates in various materials and styles (including ADA compliant) are available for applications from DIN load classes A through C. Closing end caps are also available in galvanized steel or stainless steel.

## 9857 Oil Separator

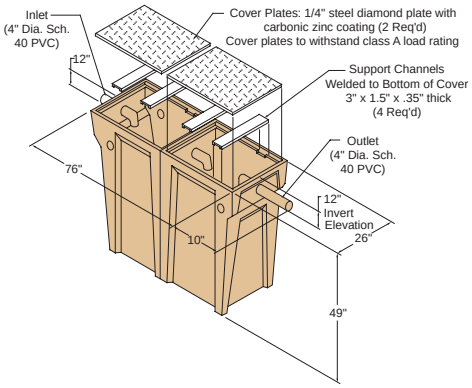


The Jay R. Smith Mfg. Co.® Drainage Systems 9857 Oil Separator effectively helps to separate oils, gases, acids, sand, food remains and sludges from waste water. It can be utilized in a variety of applications – auto body shops, gas stations, and manufacturing and food processing plants. The 9857 is a manufactured double-basin 220 gallon capacity design from polymer concrete. All PVC 4" piping and cover plates are provided.

Smith Drainage Systems will furnish engineering and installation drawings for your review.

Technical assistance is also available for installation, which normally is accomplished in a few hours.

1/4" steel diamond cover plates with carbonic zinc coatings are standard for the 9857. The load rating is Class A, or light Duty, for slow speed pneumatic tire traffic only, gross vehicle weight of 3500 lbs – 70PSI.

Available options include holes for venting and Heavy Duty load class "C" covers.

.

## 9846 Sump Boxes

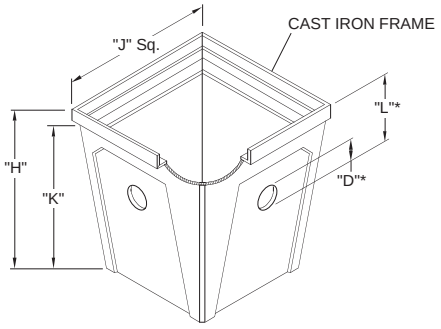


The Jay R. Smith Mfg. Co.® Drainage Systems 9846 Sump Boxes are preassembled modular units which offer solutions to many applications. Well suited for high capacity flow rates, solids and sludge handling, chemical containment and pump housing, the sump boxes are available in a range of sizes from 2'x2'x2' to 4'x4'x4'.

These polymer concrete sump boxes are easily adapted for uses with any of the Channel Slope Precast Polymer Concrete Systems. Upon specification, knockouts can be custom fabricated for pipe connections. Regularly furnished with cast iron frame and loose set cast iron slotted grate. Jay R. Smith Mfg. Co. Drainage Systems trained staff will assist in specifying the 9846 Sump Box to meet your special needs.

| | | |
|---|---|---|
| INLET | "D" | |
| INLET | "L" | |

| | | |
|---|---|---|
| OUTLET | "D" | |
| OUTLET | "L" | |

*Specify Inlet and Outlet Diameter and Invert Location

| Figure Number | Inside Dimension of Sump Box | Capacity Gallons | Capacity Liters | Weight w/o Cover | "H" w/Frame | "K" w/out Frame | "J" SQ Outside DIM |
|---|---|---|---|---|---|---|---|
| 9846 | 2' x 2' (610mm x 610mm) | 43.3 | 164 | 197 (90 kg) | 26.75 (680mm) | 24.00 (610mm) | 27.88 (708mm) |
| 9847 | 3' x 3' (914mm x 914mm) | 161.2 | 610 | 467 (212 kg) | 38.50 (978mm) | 35.75 (909mm) | 40.50 (1029mm) |
| 9848 | 4' x 4' (1219mm x 1219mm) | 475 | 1798 | 808 (368 kg) | 50.38 (1280 mm) | 48.75 (1238mm) | 51.38 (1305mm) |

## 9860 and 9868 Catch Basin

The 9860 and 9868 Series Catch Basins are designed for the 9814 and 9818 Channel Systems and accommodate any style 9870 series grate. Trash buckets in molded poly-propylene are available for easy collection and removal of debris. Knockout panels are provided on either end of the catch basin for connection with channels.

## 9868 Catch Basin

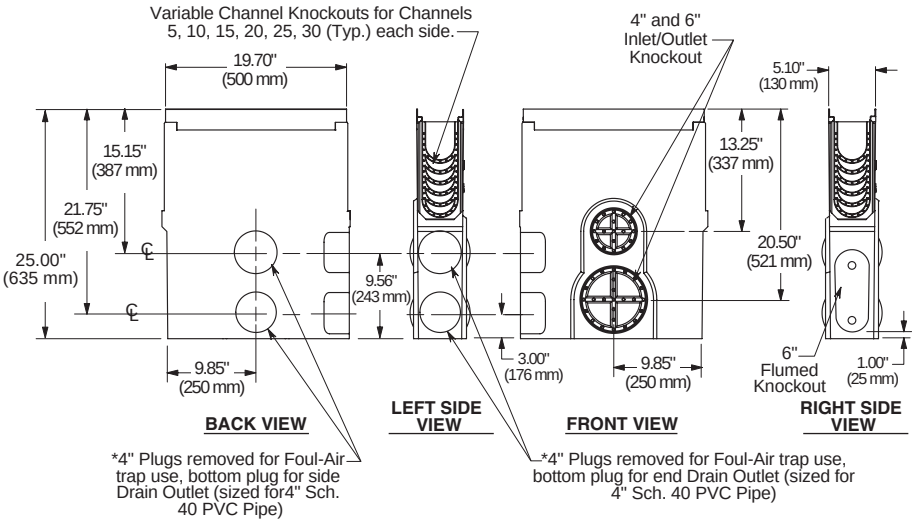


## 9864 Modular Catch Basins

The 9864 modular catch basins with extensions are available for the 9814 and 9818 systems. These stackable, modular units have center sections to extend the catch basin to meet depth requirements. Furnished with ductile iron slotted grate or ductile iron ADA compliant grate.

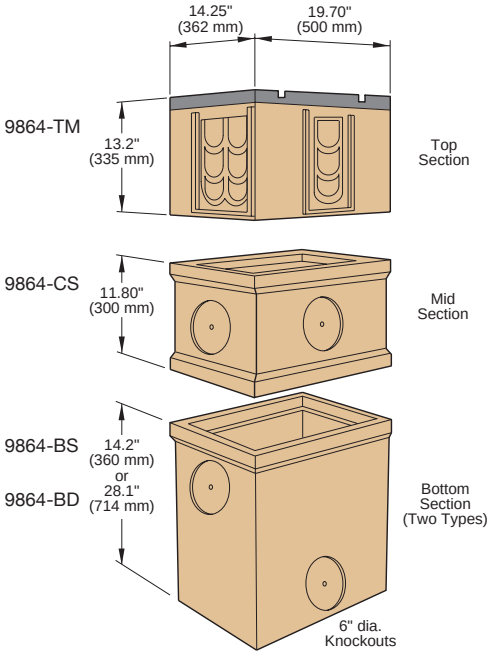


## 9812 Catch Basins

The 9812 Series Catch Basins are (9812-660-CB12) 1'-3" x 2' x 2'-3" deep and (9812-880-CB24) 2' x 2'-3" x 2'-4" deep units. It can be used in conjunction with either Fiberglass Trench System, 9810 or 9812. Knockouts to accept trench inlets or plumbing connections are easily fabricated on the job site. All units come standard with a secured, slotted ductile iron grate and coated steel frame, as well as installation brackets.

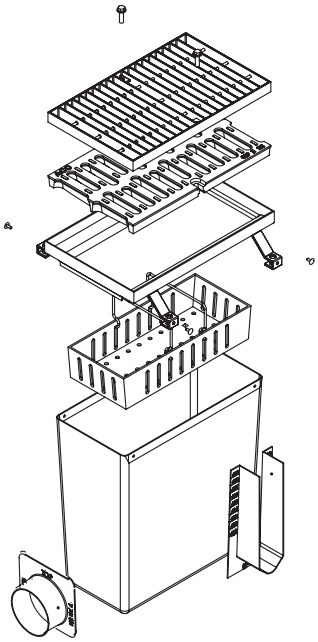

**9812-660-CB12**

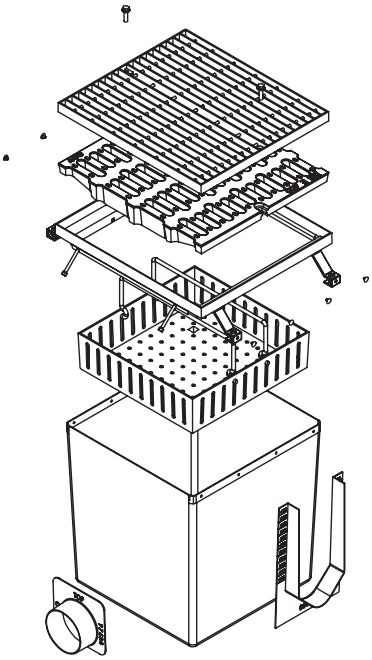

**9812-880-CB24**

# 9870 Series Drainage Systems Grates

A range of gratings designed for use with channels from the 9810, 9814, 9818, 9832, 9836 and 9837 Systems

## Load Class A: Light Duty

Light Duty, DIN 19580/EN 1433 Class A - 3,500 lbs - 70 psi for pedestrian, wheelchair and bicycle traffic.

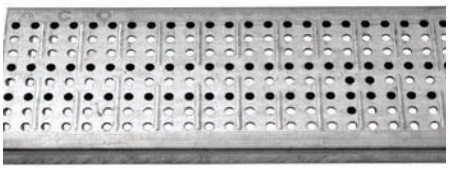

**9870-410-GP**
**Perforated Galvanized Steel**
1/4" holes for effective surface drainage. Minimizes high heel hazard and large debris collection. 1 meter. 5 lbs. Open Area 27.60 Sq. In. Quicklock® securing device is regularly furnished.

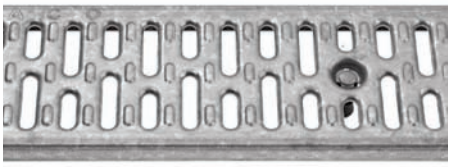

**9870-420-G**
**Slotted Galvanized Steel**
Resistant to bicycle and wheelchair tires; efficient drainage. 1 meter. 6 lbs. Open Area 42.60 Sq. In. Quicklock® securing device is regularly furnished.

**9870-440-VF**
**Vinylester Fiberglass**
For high chemical resistance or non-conductivity. 1/4" bars spaced on 1" centers. 1 meter. 4 lbs. Open Area 144.0 Sq. In.

**9870-440-VF2**
**Vinylester Fiberglass**
For high chemical resistance or non-conductivity. 1/4" bars spaced on 5/8" centers. 1 meter. 4 lbs. Open Area 113.0 Sq. In.

**9870-445-SSADA**
**ADA Stainless Steel**
Stainless steel 11 ga. ADA compliant design rated for light duty loads. 1 meter. 8 lbs. Open area 95.00 Sq. In. Quicklock® securing device is regularly furnished.

**9870-450-SS**
**Slotted Stainless Steel**
For food and beverage processing areas. High corrosion resistance. 1 meter. 6 lbs. Open Area 42.60 Sq. In. Quicklock® securing device is regularly furnished.

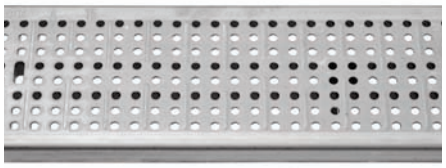

**9870-451-SSPA**
**Perforated Stainless Steel**
1/4" holes for effective surface drainage. Minimizes high heel hazard and large debris collection. High corrosion resistance. 1 meter. 5 lbs. Open Area 27.60 Sq. In. Quicklock® securing device is regularly furnished.

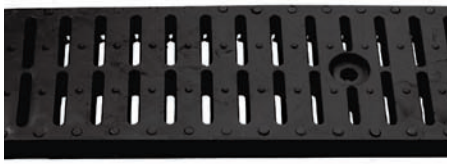

**9870-491-HPP**
**Slotted Black Polypropylene**
1/4" slots minimizes high heel hazard and large debris collection. Designed for light duty loads. 1/2 meter. 2 lbs. Open Area 17.55 Sq. In.

**9870-494-PADAB/-PADAG/**
**-PADABR/-PADAGR**
**ADA Black Polypropylene**
ADA compliant design that is rated for light duty loads. 1/2 meter. 2 lbs. Open area 28.00 Sq. In. Also available in gray color - PADAG, brick red color - PADABR, green color - PADAGR Quicklock® securing device is regularly furnished.

## Load Class C: Heavy Duty

Heavy Duty, DIN 19580/EN 1433 Class C - 56,000 lbs. 1,162 psi for commercial pneumatic tire traffic patterns, forklifts, and tractor trailers

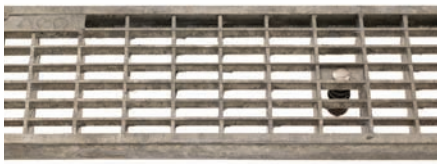

**9870-405-GM**
**Mesh Galvanized Steel**
Galvanized steel 14 ga. mesh designed for heavy loads and high intake capacity. 1 meter. 8 lbs. Open area 125.30 Sq. In. Quicklock® securing device is regularly furnished.

**9870-411-GPHD**
**Perforated Galvanized Steel**
(Reinforced). 1/4" holes for effective surface drainage. Minimizes high heel hazard and large debris collection. Heavy loads and frequent traffic. 1 meter. 10 lbs. Open Area 27.60 Sq. In. Quicklock® securing device is regularly furnished.

**9835**
**Brick Slot Grate**
Galvanized steel grates designed for heavy loads and use with brick or stone pavers. The grate features a ½" slot for paving joints. Quicklock® securing device is regularly furnished. For use with 9818 channel only.

QuickLock® is a registered trademark of ACO Polymer Products, Inc.

# 9870 Series Drainage Systems Grates

A range of gratings designed for use with channels from the 9810, 9814, 9818, 9832, 9836 and 9837 Systems

## Load Class C: Heavy Duty, continued

**9870-416-GS**
**Solid Galvanized Steel**
(Reinforced). For pipe or conduit housing. Protects channel from debris while allowing access. For heavy duty loads and frequent traffic. 1 meter. 11 lbs. Quicklock® securing device is regularly furnished.

**9870-425-GHD**
**Slotted Galvanized Steel**
(Reinforced) For heavy loads and frequent traffic. Less than half the weight of cast iron. 1 meter. 10 lbs. Open Area 42.60 Sq. In. Quicklock® securing device is regularly furnished.

**9870-430-SSM**
**Mesh Stainless Steel**
Stainless steel 14 ga. mesh designed for heavy loads and high intake capacity. 1 meter. 8 lbs. Open area 125.30 Sq. In. Quicklock® securing device is regularly furnished.

**9870-455-SSHD**
**Slotted Stainless Steel**
(Reinforced). For heavy loads and frequent traffic. High corrosion resistance. 1 meter. 10 lbs. Open Area 42.60 Sq. In. Quicklock® securing device is regularly furnished.

**9870-460-CI**
**Slotted Cast Iron**
Heavy loads and frequent traffic. 1/2 meter. 11 lbs. Open Area 26.40 Sq. In.

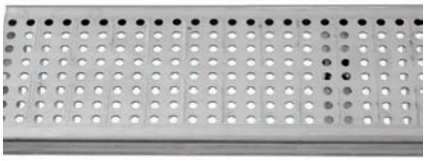

**9870-465-SSP**
**Perforated Stainless Steel**
(Reinforced). 1/4" holes for effective surface drainage. Minimizes high heel hazard and large debris collection. Heavy loads and frequent traffic. High corrosion resistance. 1 meter. 12.5 lbs. Open Area 27.60 Sq. In. Quicklock® securing device is regularly furnished.

**9870-479-MD**
**MOSAIC Ductile Iron**
Black duco coated ductile iron grate with mosaic pattern, designed for heavy duty loads. 1/2 meter. 10 lbs. Open Area 19.50 Sq. In. Quicklock® securing device is regularly furnished.

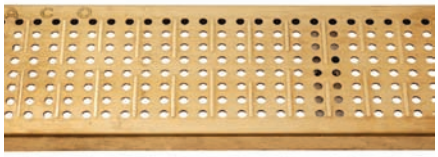

**9870-485-PB**
**Perforated Brass**
(Reinforced). 1/4" holes for effective surface drainage. Minimizes high heel hazard and large debris collection. Heavy loads, frequent traffic. Decorative. 1 meter. 13.5 lbs. Open Area 27.60 Sq. In. Quicklock® securing device is regularly furnished.

**9870-492-RC**
**Resin Composite**
Durable resin composite with 5/16" slots for effective surface drainage. For harsh chemical application, non-conductive and anti-spark. 1/2 meter. 4 lbs. Open Area 16.30 Sq. In. Quicklock® securing device is regularly furnished.

## *Load Class E: Extra Heavy Duty

Extra Heavy Duty, DIN 19580/EN 1433 Class E - 135,000 lbs. - 2,788 psi for commercial solid tire traffic patterns, forklifts and impacts from steel struts or metal wheels.

**9870-477D-ML**
**Longitudinal Slotted Ductile Iron**
Larger, horizontal slots for increased intake capacity. For heavy loads, frequent traffic. 1/2 meter. 10 lbs. Open Area 41.90 Sq. In. per 1/2 meter.

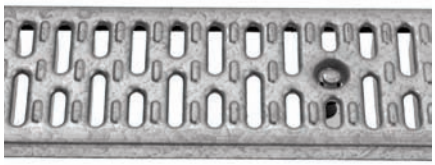

**9870-435-GHDE**
**Slotted Galvanized Steel**
(Reinforced) For heavy loads and frequent traffic. 1 meter. 10 lbs. Open Area 42.60 Sq. In. per meter. QuickLock® securing device is regularly furnished.

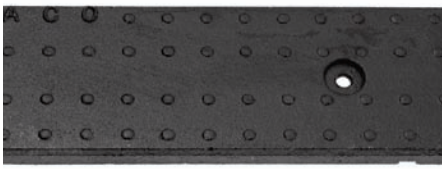

**9870-456D-MS**
**Solid Ductile Iron**
For pipe or conduit housing. Protects channel from debris while allowing access. 1/2 meter. 14 lbs.

QuickLock® is a registered trademark of ACO Polymer Products, Inc.

# 9870 Series Drainage Systems Grates

A range of gratings designed for use with channels from the 9810, 9814, 9818, 9832, 9836 and 9837 Systems

## *Load Class E: Extra Heavy Duty, continued

**9870-461-M**
**Slotted Ductile Iron**
For dynamic loads and hard wheel forklifts. 1/2 meter. 11 lbs. Open Area 26.40 Sq. In.

**9870-490-SSHDE**
**Slotted Stainless Steel**
(Reinforced) For heavy loads and frequent traffic. High corrosion resistance. 1 meter. 10 lbs. Open Area 42.60 Sq. In. per meter. QuickLock® securing device is regularly furnished.

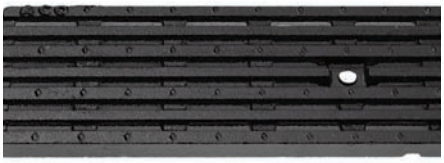

**9870-477-MADA**
**ADA Ductile Iron**
ADA compliant design that is rated for heavy loads and frequent traffic. 1/2 meter. 11 lbs. Open Area 28.50 Sq. In.

*Only meets Class E Rating when used with 9816 Frame or 9818 Series Channel.

# 9812 Series Drainage Systems Grates

## Load Class C: Heavy Duty

Heavy Duty, DIN 19580 Class C -56,000 lbs -1,162 psi for commercial pneumatic tire traffic patterns, forklifts and tractor trailers.

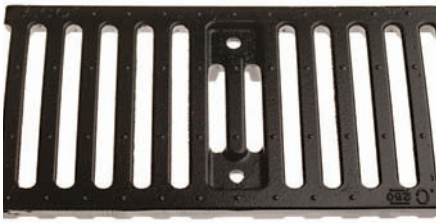

**9812-CI**
**Cast Iron Slotted**
For frequent loads and heavy traffic. Open Area 61.25 Sq. In. per 18" grate.

**9812-G**
**Galvanized Steel Bar**
For high flow areas, allows larger fluid volumes and debris to enter. Open Area 263.50 Sq. In. per 3' grate.

**9812-SS**
**Stainless Steel Bar**
For high corrosion resistance, food processing. Open Area 263.50 Sq. In. per 3' grate.

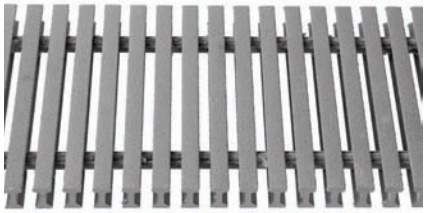

**9812-VF**
**Vinylester Fiberglass**
For high chemical resistance or non-conductivity. Open Area 35.0 Sq. In. per 3' grate.

## Load Class E: Extra Heavy Duty

Extra Heavy Duty, DIN 19580/EN 1433 Class E -135,000 lbs - 2,788 psi for commercial solid tire traffic patterns, forklifts and impacts from steel struts or metal wheels.

**9812-M**
**Ductile Iron**
For dynamic loads and hard wheel forklifts. Open Area 61.25 Sq. In. per 18" grate.

**9812-MADA**
**Extra Heavy Duty**
ADA compliant design that is rated for heavy loads and frequent traffic. Open area 42.00 sq. in. per 18" grate.

# Polymer Concrete Drainage Systems Accessories

### 9849 Rante-Arrow

The 9849 Rante-Arrow is designed for use with the 9814, 9816, and 9818 Systems. The 9849 Rante-Arrow firmly anchors the channel system in most sub-base conditions, eliminating flotation allowing for a monolithic pour.

### 9869-D Double Arrow Channel Support

This installation device supports and holds two channel ends together, allowing vertical and horizontal adjustment.

### 9869-R Rebar Channel Support

This installation tool uses rebar or other jobsite materials to support and hold channel ends together, allowing vertical and horizontal adjustment.

### 9852 Channel Chair

The 9852 Channel Chairs support adjoining ends of channels for use with all 4" I. D. polymer concrete trench systems.

### 6" Pipe Outlets

Manufactured with quality, pipe outlets form a rugged connection between channels and underground piping systems. 6" flumed schedule 40 PVC.

### 9854 Strainer

Designed to fit a 4" diameter channel outlet hole, the strainer prevents debris from entering underground piping systems.

### 9853 Shovel Head

Shaped to match the inside diameter of all 4" I.D. channels, the 9853 Shovel Head is a convenient tool for channel cleaning.

### ACO Bond - P (Polyester)
### ACO Bond - V (Vinylester)

Polymer Joint sealant for use with polyester or vinylester polymer concrete channels. ACO-Bond sealant is available in 2 1/2 lb. size, enough for 25 joints.

Channel Slope®, Channel Brace, ACOWall® and QuickLock® are registered trademarks of ACO Polymer Products, Inc.

# Smith Drainage Systems
# Chemical Resistance Guide

| Chemical Medium | Max. conc. | Short time exposure 72 hours Polyester | Long time exposure 42 days | Max. conc. | Short time exposure 72 hours Vinyl ester | Long time exposure 42 days |
|---|---|---|---|---|---|---|
| **Acetic Acid** | **30%** | ✔ | × | **75%** | ✔ | ✔ |
| Acetone | 10% | ✔ | × | 10% | ✔ | × |
| **Ammonia** | **10%** | ✔ | × | **10%** | ✔ | × |
| Aniline | 100% | ✔ | × | 100% | ✔ | × |
| **Aniline in Ethyl Alcohol** | **10%** | ✔ | ✔ | **10%** | ✔ | ✔ |
| Benzene | 100% | ✔ | × | 100% | ✔ | × |
| **Boric Acid** | **100%** | ✔ | ✔ | **100%** | ✔ | ✔ |
| Butyric Acid | 25% | ✔ | ✔ | 50% | ✔ | ✔ |
| **Butyl Alcohol** | **100%** | ✔ | ✔ | **100%** | ✔ | ✔ |
| Calcium Chloride | 100% | ✔ | ✔ | 100% | ✔ | ✔ |
| **Calcium Hydroxide** | **100%** | ✔ | × | **100%** | ✔ | ✔ |
| Caster Oil | 100% | ✔ | ✔ | 100% | ✔ | ✔ |
| **Chloric Acid** | **5%** | ✔ | × | **5%** | ✔ | ✔ |
| Chromic Acid | 5% | ✔ | ✔ | 20% | ✔ | ✔ |
| **Citric Acid** | **100%** | ✔ | ✔ | **100%** | ✔ | ✔ |
| Diesel Fuel | 100% | ✔ | ✔ | 100% | ✔ | ✔ |
| **Ethanol** | **100%** | ✔ | × | **95%** | ✔ | ✔ |
| Ethlendiamine | 100% | ✔ | ✔ | 100% | ✔ | ✔ |
| **Ethyl Acetate** | **100%** | ✔ | × | **100%** | ✔ | × |
| Ferrous Sulfate | 30% | ✔ | ✔ | 100% | ✔ | ✔ |
| **Fluorallic Acid** | **10%** | ✔ | ✔ | **10%** | ✔ | ✔ |
| Formaldehyde | 35% | ✔ | ✔ | 100% | ✔ | ✔ |
| **Formic Acid** | **10%** | ✔ | × | **10%** | ✔ | ✔ |
| Fuel Oil | 100% | ✔ | ✔ | 100% | ✔ | ✔ |
| **Gasoline** | **100%** | ✔ | ✔ | **100%** | ✔ | ✔ |
| n-Heptane | 100% | ✔ | ✔ | 100% | ✔ | ✔ |
| **n-Hexane** | **100%** | ✔ | ✔ | **100%** | ✔ | ✔ |
| Hydraulic Oil | 100% | ✔ | ✔ | 100% | ✔ | ✔ |
| **Hydrochloric Acid** | **10%** | ✔ | ✔ | **37%** | ✔ | ✔ |
| Hydrofluoric Acid | 5% | ✔ | × | 20% | ✔ | ✔ |
| **JP4** | **100%** | ✔ | ✔ | **100%** | ✔ | ✔ |
| JP8 | 100% | ✔ | ✔ | 100% | ✔ | ✔ |
| **Lactic Acid** | **10%** | ✔ | ✔ | **100%** | ✔ | × |
| Methanol | 5% | × | × | 5% | ✔ | × |
| **Methyl Amine** | **100%** | ✔ | × | **100%** | ✔ | × |
| Methyl Ethyl Ketone | 100% | ✔ | × | 100% | ✔ | × |
| **Mineral Oil SAE5W50** | **100%** | ✔ | ✔ | **100%** | ✔ | ✔ |
| Monochlor Benzene | 0.05% | × | × | 0.05% | ✔ | ✔ |
| **Monochloroacetic Acid** | **10%** | ✔ | ✔ | **10%** | ✔ | ✔ |
| Nitric Acid | 10% | ✔ | × | 20% | ✔ | ✔ |
| **n-Nonane** | **100%** | ✔ | ✔ | **100%** | ✔ | ✔ |
| Iso-Octane | 100% | ✔ | × | 100% | ✔ | × |
| **Oxalic Acid** | **100%** | ✔ | ✔ | **100%** | ✔ | ✔ |
| Phenol | 100% | ✔ | × | 100% | ✔ | × |
| **Phosphoric Acid** | **10%** | ✔ | ✔ | **75%** | ✔ | ✔ |
| Potassium Hydroxide | 10% | × | × | 10% | ✔ | ✔ |
| **Sodium Acetate** | **100%** | ✔ | × | **100%** | ✔ | ✔ |
| Sodium Carbonate | 20% | ✔ | ✔ | 35% | ✔ | ✔ |
| **Sodium Chloride** | **100%** | ✔ | ✔ | **100%** | ✔ | ✔ |
| Sodium Hydroxide | 15% | ✔ | × | 25% | ✔ | ✔ |
| **Sodium Hypochloric** | **5%** | ✔ | ✔ | **5%** | ✔ | ✔ |
| Sulfuric Acid | 40% | ✔ | ✔ | 70% | ✔ | ✔ |
| **Tetrafluoroborsaure** | **20%** | ✔ | × | **20%** | ✔ | ✔ |
| Toluene | 100% | ✔ | × | 100% | ✔ | × |
| **Trichloroethylene** | **100%** | × | × | **100%** | × | × |
| Triethylamine | 100% | ✔ | ✔ | 100% | ✔ | ✔ |
| **Xylene** | **100%** | ✔ | × | **100%** | ✔ | × |

**Note**: Maximum operating temperature of 180ºF (82ºC)

Smith/ACO Drain channel bodies are highly resistant to chemical attack and, with the appropriate grate, can be used in most environments where acids and dilute alkalis are encountered.

Refer to chemical chart left for resistance of Polyester and Vinyl ester polymer concrete. Fiberglass products use the same polyester resin - refer to Polyester details for chemical resistance.

When greater chemical resistance is required, Vinylester polymer concrete channels should be specified.

These recommendations are for guidance only. Customers are advised to test a coupon of polymer concrete to ensure suitability. Test coupons are available free of charge from Smith/ACO.

Polymer concrete is not affected by road de-icing salts, and conforms to **ASTM - B117 Salt Spray Test.**

## Important considerations for chemical environments

When reviewing potential applications of trench drains in chemical environments, the following issues should be considered:

1. Type(s) & mixture of chemical(s).
2. Concentration percentages.
3. Contact time with trench system.
4. Temperatures of chemicals flowing into the trench drain (180ºF, 82ºC max).
5. Flushing system employed to clear chemicals from the system.
6. Cleaning agents should be checked for compatibility with trench material.
7. Test coupons can be used for final determination of chemical resistance.
8. Grate, locking mechanism, edge rail, outlet and trash bucket materials should be checked for chemical resistance.
9. Check sealant for compatibility.

# 9818 Channel Slope® Precast Polymer Concrete System Specifications

## Part 1

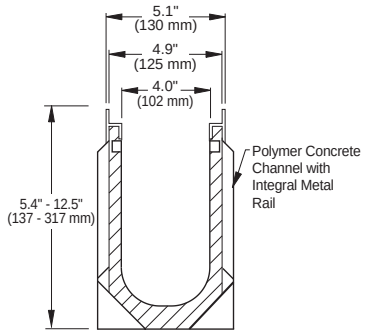


**CROSS SECTION DETAIL**

### General

All materials, labor and equipment necessary to install a precast, presloped, chemical-resistant polyester concrete (or vinylester concrete) trench drainage system as specified and as shown on the working drawings shall be included. Install Smith Drainage Systems in strict accordance with manufacturer's recommendations and shop drawings.

### Related Work

Work specified in other sections includes, but is not limited to: excavation and backfill, cast-in-place concrete, and mechanical equipment.

### System Description

Modular trench drainage system precast from a corrosion resistant polyester concrete (or vinylester concrete) including interlocking modular components for on-site installation.

### Submittals

Manufacturer will submit, when required, shop drawings showing a schematic plan of the total drainage system listing all parts being provided with exact centerline dimensions suitable for installation. Copies of the manufacturer's recommended method of installation, assembly, and anchorage shall be submitted for review.

## Part 2

### Products

Manufacturer shall be Jay R. Smith Mfg. Co.®, Montgomery, Alabama.

### Product Description

| | |
|---|---|
| Top Unit Width | 5.1" |
| Internal Width | 4.0" |
| Unit Depth | 5.4" to 12.5" |
| Compressive Strength | 14,500 psi |
| Tensile Strength | 28,000 psi |
| Built-in Slope | .6% |

Water Absorption not to exceed 1%

Each precast polyester polymer concrete one meter unit shall have a .6% built-in slope and a permanently cast-in integral galvanized steel or stainless steel rail with a maximum edge thickness of .10". The integral cast-in metal rail shall provide mechanical support as a one-part unit which can support 135,000 lbs. - 2,788 psi vehicle weight, with class "E" rated grates.

All metal material used in grate and rail construction shall be minimum of .10" thick.

Channel profile shall include positive interlocking tongue and groove connections (male and female joining ends) which can be sealed to provide water tight connections.

Locking device recesses are formed into the reinforced channel walls. All locking device recess material of construction shall be polymer concrete.

Quicklock® locking device is provided with selected grates. Quicklock® insures proper and secure grate lock down each time the grate is replaced in the trench.

The QuickLock® grates shall have a non-removal factory pressed glass nylon securing lug with mating stainless steel spring clip locking bar.

All precast polyester polymer concrete one meter units shall have a .6% built-in slope and cast-in integral solid metal rail and shall have a preformed vertical 4" and flumed 6" knock-out on the bottom of the unit.

All catch basins shall have a permanently cast-in integral solid metal rail with a maximum edge thickness of .10". The cast-in solid metal rail shall support 135,000 lbs. - 2,788 psi vehicle weight, with class "E" rated grates.

## Part 3

### Site Preparation

Excavate the area for channel placement wide and deep enough to accommodate the standard channel size and a minimum of 4" concrete encasement on both sides as well as underneath the channel. Channels require a minimum of 4" of concrete support and top of channel must be evenly aligned to the surface of the surrounding slab.

### Installation

Channel sections are installed from the outlet end of the system, working from either catch basin or deeper channel sections to shallow channel sections. Insert channels from above to allow ends to interlock. Channel sections shall be placed on Rante Arrows, brick, rebar basket, Channel Chair, low slump concrete, grout slurry, or suspended to obtain correct finished elevation. Cutting will be made, if required, by masonry or concrete saw. Temporarily place grate in channel with shim spacer to avoid compression during concrete placement.

### Concrete Pour

Protect grates and channel interior during pouring of concrete. Place concrete in a manner that will not dislodge the channels. Concrete shall be at finished level or 1/8" above the top of the channel to ensure efficient drainage and adequate channel edge protection.

### Finishing and Clean up

Following final set of concrete, remove grate protection, place grates in final position and engage locking bolts in correct location.

The approved supplier is Jay R. Smith Mfg. Co.®, 2781 Gunter Park Drive East, Montgomery, Alabama 36109. Telephone: 334-277-8520

Channel Slope® and QuickLock® are registered trademarks of ACO Polymer Products, Inc.

# 9814 Channel Slope® Precast Polymer Concrete System Specifications

## Part 1

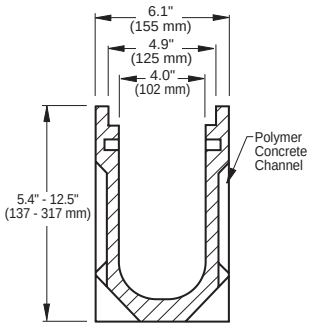


**CROSS SECTION DETAIL**

### General

All materials, labor, and equipment necessary to install a precast, sloped or neutral, chemical resistant polymer concrete trench drainage system as specified and as shown on the working drawings shall be included. Install Smith Drainage Systems in strict accordance with manufacturer's recommendations and shop drawings.

### Related Work

Work specified in other sections includes, but is not limited to: excavation and backfill, cast-in-place concrete, and mechanical equipment.

### System Description

Modular trench drainage system precast from a corrosion resistant polymer concrete including interlocking modular components for on-site installation.

### Quality Assurance

Manufacturer shall submit test results from an independent testing laboratory stating the uniform live compressive load in accordance with specification DIN 19580/EN 1433 for drainage channel sections.

### Submittals

Manufacturer will submit, when required, shop drawings showing a schematic plan of the total drainage system listing all parts being provided with exact centerline dimensions suitable for installation. Copies of the manufacturer's recommended method of installation and assembly shall be submitted for review.

## Part 2

### Products

Manufacturer shall be Jay R. Smith Mfg. Co.®, Montgomery, Alabama.

### Product Description

Product shall be the Channel Slope® Precast Polymer Concrete System including grates of a material recommended by the manufacturer. Trench drain channels shall be precast, sloped or neutral and interlocking, incorporating either polyester or vinylester resins and formulated aggregate, with recesses for grating lockdown devices molded into the channel walls. Recesses shall be formed from the same material as the channel.

Channels shall not have any projecting surfaces within 2" of the top surfaces.

| | |
|---|---|
| Unit Width | 6.1" |
| Unit Depth | 5.4" to 12.5" |
| Internal Width | 4.0" |
| Unit Length | 39.37" |
| System Slope | .06% |
| Compressive Strength | 14,500 psi |
| Flexural Strength | 2,900 psi |
| Water Absorption not to exceed 1% | |

Channel profile shall include positive interlocking tongue and groove connections (male and female joining ends) which can be sealed to provide water tight connections.

Locking device recesses are formed into the reinforced channel walls. All locking device recess material of construction shall be polymer concrete.

Quicklock® locking device is provided with selected grates. Quicklock® insures proper and secure grate lock down each time the grate is replaced in the trench.

The QuickLock® grates shall have a non-removal factory pressed glass nylon securing lug with mating stainless steel spring clip locking bar.

All precast polyester polymer concrete one meter units shall have a .6% built-in slope and shall have a preformed vertical 4" and flumed 6" knock-out on the bottom of the unit.

## Part 3

### Site Preparation

Install Smith Drainage Systems in strict accordance with manufacturer's recommendations and shop drawings. Excavate the area for channel placement wide and deep enough to accommodate the standard channel size and a minimum of 4" concrete encasement on both sides as well as underneath the channels. Channels require a minimum of 4" of support and the top of the grate must be evenly aligned with the surface of the surrounding slab. (Note: The thickness of the concrete encasement must be at least as thick as the slab and never less than 4".)

### Installation

Channel sections are installed from the outlet end of the system working from either catch basins or deeper channel sections to shallow channel sections. Insert channels from above to allow ends to interlock. Channel sections shall be placed on brick, rebar basket, Channel Chairs, Channel Brace, or low slump concrete, grout slurry, or suspended to obtain correct finished elevation. Cutting will be made, if required, by masonry saw. Temporarily place grate in channel with shim spacer to avoid compression during concrete placement.

### Concrete Pour

Protect grates and channel interior during pouring of concrete. Place concrete in a manner that will not dislodge the channels. Concrete shall be at finished level or 1/8" above the top of the channel to ensure efficient drainage and adequate channel edge protection.

### Finishing and Clean up

Following final set of concrete, remove grate protection, place grates in final position and engage locking bolts in correct location.

The approved supplier is Jay R. Smith Mfg. Co.®, 2781 Gunter Park Drive East, Montgomery, Alabama 36109. Telephone: 334-277-8520

Channel Slope® and QuickLock® are registered trademarks of ACO Polymer Products, Inc.

# 9828 Channel Brute Extra Heavy Duty Concrete System Specifications

## Part 1

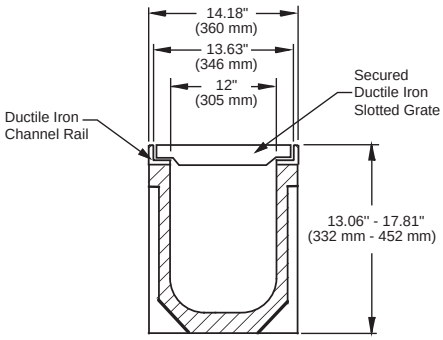


**CROSS SECTION DETAIL**

### General

All materials, labor, and equipment necessary to install a precast, sloped or neutral, chemical resistant polymer concrete trench drainage system as specified and as shown on the working drawings shall be included. Install Smith Drainage Systems in strict accordance with manufacturer's recommendations and shop drawings.

### Related Work

Work specified in other sections includes, but is not limited to: excavation and backfill, cast-in-place concrete, and mechanical equipment.

### System Description

Modular trench drainage system precast from a corrosion resistant polymer concrete including interlocking modular components for on-site installation.

### Quality Assurance

Manufacturer shall submit test results from an independent testing laboratory stating the uniform live compressive load in accordance with specification DIN 19580/EN 1433 for drainage channel sections.

### Submittals

Manufacturer will submit, when required, shop drawings showing a schematic plan of the total drainage system listing all parts being provided with exact centerline dimensions suitable for installation. Copies of the manufacturer's recommended method of installation and assembly shall be submitted for review.

## Part 2

### Products

Manufacturer shall be Jay R. Smith Mfg. Co.®, Montgomery, Alabama.

### Product Description

Product shall be the Channel Brute Extra Heavy Duty Polymer Concrete System including ductile iron slotted grates. Trench drain channels shall be precast, sloped or neutral and interlocking, incorporating either polyester or vinylester resins and formulated aggregate, with recesses for grating lockdown devices molded into the channel walls. Recesses shall be formed from the same material as the channel.

Channels shall not have any projecting surfaces within 2" of the top surfaces.

| | |
|---|---|
| Unit Width | 14.18" |
| Unit Depth | 13.06"to 17.81" |
| Internal Width | 12.0" |
| Unit Length | 39.37" |
| System Slope | .06% |
| Compressive Strength | 14,500 psi |
| Flexural Strength | 2,900 psi |
| Water Absorption not to exceed 1% | |

## Part 3

### Site Preparation

Install Smith Drainage Systems in strict accordance with manufacturer's recommendations and shop drawings. Excavate the area for channel placement wide and deep enough to accommodate the standard channel size and a minimum of 8" concrete encasement on both sides as well as underneath the channels. Channels require a minimum of 8" of support and the top of the grate must be evenly aligned with the surface of the surrounding slab. (Note: The thickness of the concrete encasement must be at least as thick as the slab and never less than 8".)

### Installation

Channel sections are installed from the outlet end of the system working from either catch basins or deeper channel sections to shallow channel sections. Insert channels from above to allow ends to interlock. Channel sections shall be placed on brick, rebar basket, low slump concrete, grout slurry, or suspended to obtain correct finished elevation. Cutting will be made, if required, by masonry saw. Temporarily place grate in channel to avoid compression during concrete placement.

### Concrete Pour

Protect grates and channel interior during pouring of concrete. Place concrete in a manner that will not dislodge the channels. Concrete shall be at finished level or 1/8" above the top of the channel to ensure efficient drainage and adequate channel edge protection.

### Finishing and Clean up

Following final set of concrete, remove grate protection, place grates in final position and engage locking bolts in correct location.

The approved supplier is Jay R. Smith Mfg. Co.®, 2781 Gunter Park Drive East, Montgomery, Alabama 36109. Telephone: 334-277-8520

Channel Brute is a Jay R. Smith Mfg. Co. Drainage System product.

# 9812 High Capacity Presloped Fiberglass Trench System Specifications

## Part 1

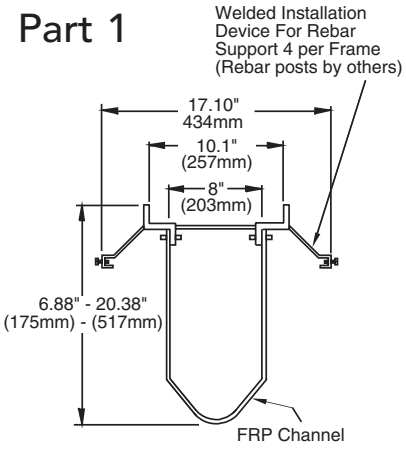


**CROSS SECTION DETAIL**

### General

All materials, labor, and equipment necessary to install a precast, pre-sloped, chemical resistant polyester fiberglass (or vinylester fiberglass) trench drainage system as specified and as shown on the working drawings shall be included. Install Smith Drainage Systems in strict accordance with manufacturer's recommendations and shop drawings.

### Related Work

Work specified in other sections includes, but is not limited to: excavation and backfill, cast-in-place concrete, and mechanical equipment.

### System Description

Modular trench drain system molded from chemical and corrosion resistant polyester or vinylester fiberglass for on-site assembly and installation.

### Quality Assurance

Manufacturer shall submit test results from an independent testing laboratory stating the uniform live compressive load in accordance with specification DIN 19580/EN 1433 for ductile iron channel gratings.

### Submittals

Manufacturer will submit, when required, shop drawings showing a schematic plan of the total drainage system listing all parts being provided with exact centerline dimensions suitable for installation. Copies of the manufacturer's recommended method of installation, assembly, and anchorage shall be submitted for review.

## Part 2

### Products

Manufacturer shall be Jay R. Smith Mfg. Co.®, Montgomery, Alabama.

### Product Description

Product shall be the Presloped Fiberglass Trench System including grates as recommended by manufacturer. Channels shall be molded, presloped and interlocking, made from polyester or vinylester reinforced resin materials. Grates shall have integral lockdown capabilities with:

| | |
|---|---|
| Unit Width | 10.1" |
| Unit Depth | 6.88" to 20.38" |
| Internal Width | 8.0" |
| Unit Length | 108.0" |
| System Length | 108' (12 units) |
| System Slope | 1.04% |
| Tensile Strength | 16,400 PSI |
| Flexural Strength | 24,000 PSI |
| Compressive Strength | 32,000 PSI |
| Water Absorption | .15% net |

### Related Products

Smith Drainage Systems also has available the 9810 Fiberglass Sloped System as an alternate system. This specification is suggested for the 9812 System, although the 9810 System has similar properties with different dimensions.

## Part 3

### Site Preparation

Excavate the area for channel placement wide and deep enough to accommodate the standard channel size and a minimum of 4" concrete encasement on both sides as well as underneath the channel. Channels require a minimum of 4" of concrete support and top of channel must be evenly aligned with the surface of the surrounding slab.

### Installation

Channel sections are installed from the outlet end of the system, working from either catch basins or deeper channel sections to shallow channel sections. Insert channels from above to allow ends to interlock. Channel sections shall be suspended to obtain correct finish height. Cutting will be performed with all purpose metal cutting saw or appropriate tool. Temporarily place expanded polystyrene block sidewall supports inside channels to avoid compression by concrete pour.

### Concrete Pour

Protect channel interior during pouring of concrete. Place concrete in a manner that will not dislodge the channels. Concrete shall be at finished level or 1/8" above the top of the channel to ensure efficient drainage and adequate channel edge protection.

### Finishing and Cleanup

Following final set of concrete, remove channel protection, place grates in final position and engage locking bolts in correct location.

The approved supplier is Jay R. Smith Mfg. Co.®, 2781 Gunter Park Drive East, Montgomery, Alabama 36109. Telephone: 334-277-8520

# Smith Drainage Systems 9814, 9816, and 9818 Channel Slope® Trench Drain Installation

Installation of the Channel Slope® Precast Polymer Concrete Systems are achieved by following these basic steps.

1. Excavate a wide and deep trench to accommodate the channel and bedding concrete. Erect a temporary string line at each end of the drain run as a guide for laying the channels to the required level. Lay a bed of foundation concrete and place the first (deepest) drain channel or catch basin in position. The depth of the bedding concrete should be a minimum of 4" thick or equal to the surrounding slab thickness, whichever is thicker. **(Fig. A)**

2. Successive channels should be installed in order to ensure the top edge of the channel follows the string line. It is important that the arrow cast on the channel point toward the outlet or catch basin. **(Fig. B)**

3. The final channel in the run may require cutting to length with a masonry saw. End plates are placed in position and backfilled with concrete. **(Fig. C)**

4. Grate covers should be placed in the channels when filling the concrete along the sides. This ensures channel side walls are supported. During this process, mask the grates to protect against concrete splashes and stains. **(Fig. D)**

5. For drain channels laid in concrete floors, expansion joints must be provided parallel to each side of the drain run. Smith Drainage Systems also recommend placing crack control joints at right angles to the channels. Line up these joints with the joint lines of the channels. **(Fig. E)**

6. Installation is complete. A complete installation guide is available upon request.

Channel Slope® is a registered trademark of ACO Polymer Products, Inc.

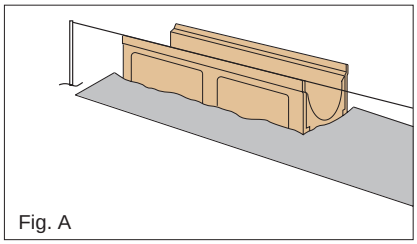

Fig. A

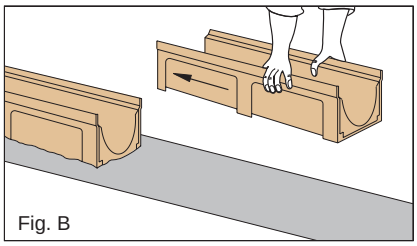

Fig. B

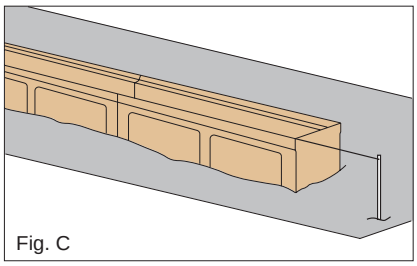

Fig. C

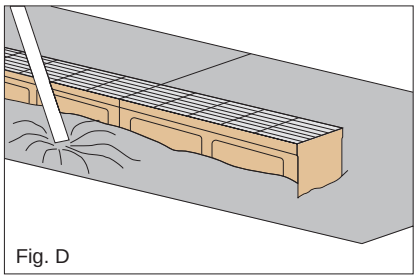

Fig. D

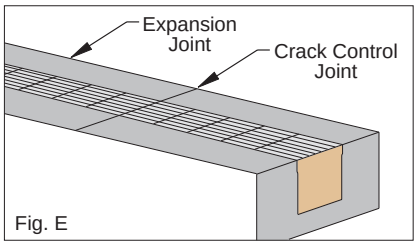


Fig. E

## Installation into Different Materials

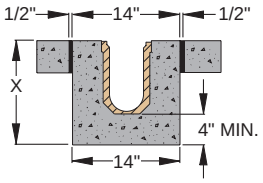


INSTALLATION IN CONCRETE

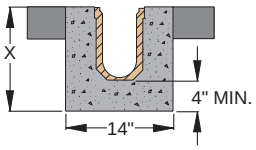


INSTALLATION IN ASPHALT

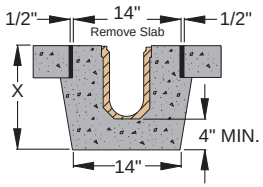


RETROFIT INSTALLATION

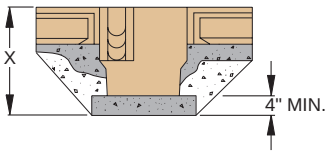


CATCH BASIN BEDDING

X=variable dimension

## Sealing Channel joints and inlet/outlet connections

The following channel surface preparation steps must be followed in order for PJ-Seal-P (flexible one part urethane sealant), ACO Bond-P (2 part polyester polymer resin epoxy) or ACO Bond-V (2 part vinylester polymer resin epoxy) to seal the channel sections. The adjoining section surfaces **must** be cleaned using a wire brush or sand paper, which will expose a lighter color of the channel that will allow the sealant to bond. Please note that the channel sections have a wax release agent coating on the surface and it must be removed from any areas that are going to be sealed.

# Smith Drainage Systems 9828 Channel Brute Trench Drain Installation

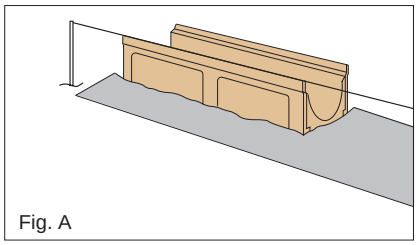

Fig. A

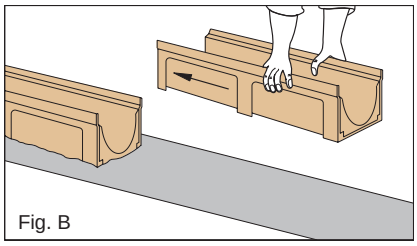

Fig. B

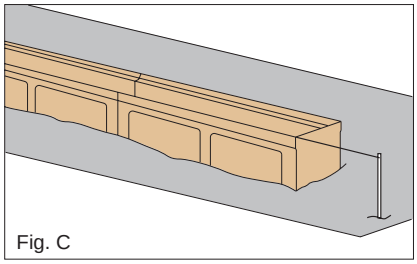

Fig. C

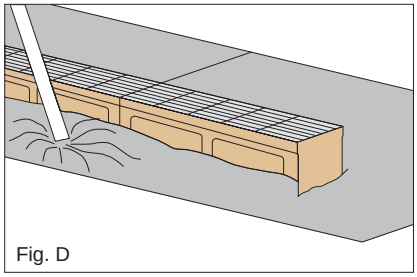

Fig. D

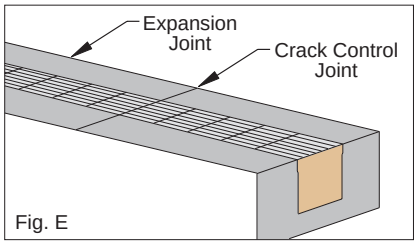


Fig. E

Installation of the 9828 Channel Brute Extra Heavy Duty Polymer Concrete System is achieved by following these basic steps.

1. Excavate a wide and deep trench to accommodate the channel and bedding concrete. Erect a temporary string line at each end of the drain run as a guide for laying the channels to the required level. Lay a bed of foundation concrete and place the first (deepest) drain channel or catch basin in position. The depth of the bedding concrete should be a minimum of 6.5" thick or equal to the surrounding slab thickness, whichever is thicker. **(Fig. A)**

2. Successive channels should be installed in order to ensure the top edge of the channel follows the string line. It is important that the arrow cast on the channel point toward the outlet or catch basin. **(Fig. B)**

3. The final channel in the run may require cutting to length with a masonry saw. End plates are placed in position and backfilled with concrete. **(Fig. C)**

4. Grate covers should be placed in the channels when filling the concrete along the sides. This ensures channel side walls are supported. During this process, mask the grates to protect against concrete splashes and stains. **(Fig. D)**

5. For drain channels laid in concrete floors, expansion joints must be provided parallel to each side of the drain run. Smith Drainage Systems also recommend placing crack control joints at right angles to the channels. Line up these joints with the joint lines of the channels. **(Fig. E)**

6. Installation is complete. A complete installation guide is available upon request.

Channel Brute is a Jay R. Smith Mfg. Co. Drainage System product.

## Installation into Different Materials

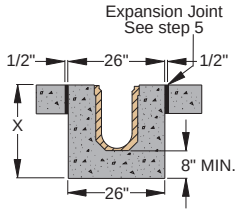


INSTALLATION IN CONCRETE

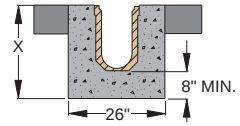


INSTALLATION IN ASPHALT

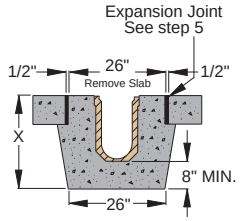


RETROFIT INSTALLATION

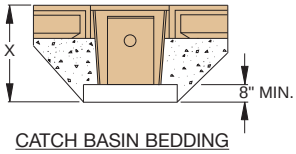


CATCH BASIN BEDDING

X=variable dimension

## Sealing Channel joints and inlet/outlet connections

The following channel surface preparation steps must be followed in order for PJ-Seal-P (flexible one part urethane sealant), ACO Bond-P (2 part polyester polymer resin epoxy) or ACO Bond-V (2 part vinylester polymer resin epoxy) to seal the channel sections. The adjoining section surfaces **must** be cleaned using a wire brush or sand paper, which will expose a lighter color of the channel that will allow the sealant to bond. Please note that the channel sections have a wax release agent coating on the surface and it must be removed from any areas that are going to be sealed.

# Smith Drainage Systems 9812 Fiberglass Trench Drain Installation

Installation of the 9812 series Presloped Fiberglass Trench System is achieved by following these basic steps.

Tools and supplies needed:
#5 rebar (5/8" dia.) 4 pcs. per Channel (by others)
Fiberglass repair kit – 8 oz. or 32 oz.
Adjustable wrench
Expanded polystyrene locks for internal bracing
Rags, sandpaper
Plywood (or similar) covers, 10" wide

1. Set the 9' or 3' frame on saw horses upside down and assemble the channel to the frame, making sure to line up the holes in the channel with the holes in the frame. Also make sure the male end of the channel is flush with the end of the frame.

2. Insert the supplied plastic ratchet fasteners through the holes in the frame from the inside and then through the holes in the channel. This fastens the channel to the frame. Use sandpaper and sand outside surface of the male (deep) end of the channel and the inside surface of the female (shallow) end of the channel. This step **must** be done before applying sealant to the channel sections.

3. Place the outlet (deepest) channel first. Attach the outlet to the stub-up pipe as required and align the channel to the string line. Drive the rebar through each of the four brackets coming off the frame into the subsoil (8 inches minimum).

4. Adjust the frame height by tightening the set screw bolts onto the rebar.

5. Place next channel into position slightly behind first channel. Set channel into female saddle at the shallow end of the channel placed in step 3. The protruding channel on the first channel will accept and support the male end of the second channel. Make sure the frames of both channels fit flush together. Smooth any sealant that oozes out with a putty knife or similar tool.

6. Fasten the installation brackets to the rebar as in step 4.

7. Repeat steps 3-6 for any remaining channels.

8. Attention: Step 8 must be followed or damage to channels will occur! For channel numbers 801-804 no interior support is required for the channel walls. For channels 805-807 place the supplied expanded polystyrene blocks into the channels with one at each end, one in the middle and one in between for a total of five blocks. For channels 808-812 place the blocks at each end and in between each cross bar for a total of eight blocks. PROPERLY BRACING THE DEEPER CHANNELS DURING CONCRETE PLACEMENT WILL PREVENT BOWING OR COLLAPSE OF THE CHANNELS DUE TO HYDROSTATIC PRESSURE FROM THE CONCRETE. REQUIRED INTERNAL BRACING SHOULD BE VIEWED AS ANY OTHER CONCRETE FORM.

9. Place plywood or similar covers into the grate area to prevent concrete from entering the channels.

10. Recheck the tightness of all fasteners and reattach any questionable areas.

11. Cut the end caps to length per the markings on the end caps. Sand all matting surfaces prior to applying sealant to the end caps, inlet/outlet caps, and vertical outlets. Attach end caps with required sealant (PJ-Seal-P or Fiberglass resin, for vertical outlet Fiberglass resin). The flanges on the sides of the male end cap or the outlet cap fits over the outside of the channel. The female end cap fits inside the saddle on the end of the channel, but the flange faces away from the end of the channel. Attach the end frame by slipping the groove over the top of the cap.

## Installation into Different Materials

9812
Concrete Installation

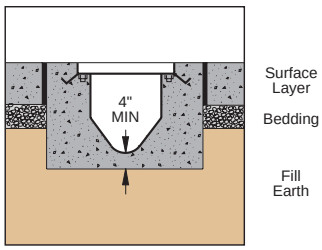


9812
Asphalt Installation

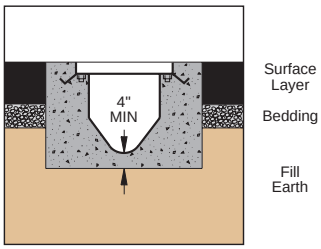


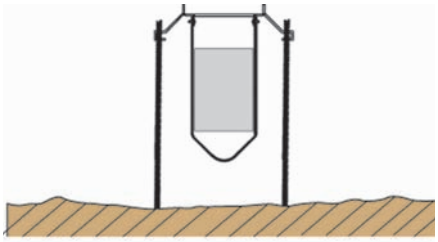

9812 using rebar in installation brackets

NOTE: Foam block bracing to prevent channel crushing during concrete pour.

12. When placing the concrete around the channels, take care to place it equally on both sides of the trench system. Placing too much concrete on one side of the channel may cause the channel to twist.

13. If any concrete enters the channels, let it cure, it will not adhere, and is easily removed after it has cured. However, it is important to minimize the amount of concrete that enters the channel.

14. After concrete has taken its initial set, remove covers and internal bracing.

15. Install grates.

SMITH® JAY R. SMITH MFG. CO.®
Member of Morris Group International
CUSTOMER DRIVEN

Plumbing and Drainage Products
P.O. Box 3237
Montgomery, AL 36109-0237
Tel 800-467-6484 • 334-277-8520
Fax 334-272-7396

www.jrsmith.com

# Jay R. Smith Mfg. Co.® Drainage System
# Smith/ACO Trench Drain Series

## 6" Wide Channel Slope® Polymer Concrete System

9818 Series - Page 4

## 6" Wide Channel Slope® Polymer Concrete System

9814 Series - Page 6

## 6" Wide Extra Heavy Duty Polymer Concrete System

9816 Series - Page 8

## 12" Wide Channel Brute Extra Heavy Duty Polymer Concrete System

9828 Series - Page 10

## 6" Wide Advanced Hydraulic Fiberglass System

9810 Series - Page 12

## 10" Wide High Capacity Fiberglass System

9812 Series - Page 14

This information is believed to be accurate but is not guaranteed to be so. Specifications subject to change without notice.

Channel Slope® is a registered trademarks of ACO Polymer Products, Inc.

MORRIS GROUP
INTERNATIONAL
www.morrisgroup.co

SPM 0334 4/12

# APPENDIX D-4

# TYPICAL FLOOR COATING MATERIALS

## Table 3.1a—Acids

| Substance | Notes | Effect on concrete | Protective treatments |
|---|---|---|---|
| Acetic acid, less than 10 mass percent | a | Slow disintegration | 1, 2, 9, 10, 12, 14, 16 (II, III, V, VI, VII, VIII) |
| Acetic acid, 30 mass percent | a | Slow disintegration | 9, 10, 14, 16 (III, V, VI, VII) |
| Acetic acid, 100 percent (glacial) | | Slow disintegration | 9, 16 (V, VII) |
| Acid waters | b | Slow disintegration. In porous or cracked concrete, attacks steel. Steel corrosion could cause concrete to spall. | 1, 2, 3, 6, 8, 9, 10, 11, 12, 13, 16 (II, III, V, VI, VII, VIII), 17, 24, 25 |
| Acid waters (pH 6.5 or less) | b | Natural, slightly acid waters could erode surface mortar, but then action usually stops. Disintegration increases as pH decreases. | 1, 2, 3, 6, 8, 9, 10, 11, 12, 13, 16 (II, III, V, VI, VII, VIII), 17 |
| Arsenious acid | | None | |
| Boric acid | | Negligible effect | 2, 6, 7, 8, 9, 10, 12, 13, 15, 16 (II, III, V, VI, VII, VIII), 17, 19, 24, 25 |
| Butyric acid | a | Slow disintegration | 3, 4, 8, 9, 10, 12, 16 (II, III, V, VI) |
| Carbolic acid | | Slow disintegration | 1, 2, 16 (III, V, VII), 17, 25 |
| Carbonic acid (soda water, club soda) | a, d | 0.9 to 3 ppm of carbon dioxide dissolved in natural waters, disintegrates concrete slowly, and higher concentrations are slightly more aggressive. | 2, 3, 4, 8, 9, 10, 12, 13, 15, 16 (II, III, V, VI, VIII), 17 |
| Chromic acid 5 mass percent | f | None. In porous or cracked concrete, attacks steel. Steel corrosion could cause concrete to spall. | 2, 6, 7, 8, 9, 10, 16 (VI, VII, VIII), 19 |
| Chromic acid, 50 mass percent | f | None. In porous or cracked concrete, attacks steel. Steel corrosion could cause concrete to spall. | 16 (VII), 19 |
| Formic acid, 10 mass percent | a | Slow disintegration | 2, 5, 6, 7, 10, 12, 13, 16 (II, III, V, VII), 17, 24, 25 |
| Formic acid, 90 mass percent | | Slow disintegration | 2, 7, 10, 13, 16 (III, V, VII), 17 |
| Humic acid | | Slow disintegration possible (aggressiveness depends on humus type) | 1, 2, 3, 9, 10, 12, 15, 16 (II, III, V), 25 |
| Hydrochloric acid, 10 mass percent | a | Rapid disintegration, including steel | 5, 6, 7, 8, 9, 10, 12, 14, 16 (II, III, V, VI, VII, VIII), 17, 19, 20, 25 |
| Hydrochloric acid, 37 mass percent (muriatic acid) | | Rapid disintegration, including steel | 5, 6, 8, 9, 10, 16 (III, V, VI, VII, VIII) |
| Hydrofluoric acid, 10 mass percent | | Rapid disintegration, including steel | 5, 6, 7, 8, 9, 12, 16 (carbon and graphite brick; II, III, V, VII), 17 |
| Hydrofluoric acid 75 mass percent | | Rapid disintegration, including steel | 16 (carbon and graphite brick; V, VIII), 17 |
| Hypochlorous acid 10 mass percent | | Slow disintegration | 5, 8, 9, 10, 16 (VI, VII), 24 |
| Lactic acid, 5 to 25 mass percent | a | Slow disintegration | 3, 4, 5, 7, 8, 9, 10, 11, 12, 13, 15, 16 (II, III, V, VI, VII, VIII), 17, 21, 25 |
| Nitric acid, 2 mass percent | | Rapid disintegration | 6, 8, 9, 10, 13, 16 (VI, VII, VIII), 20 |
| Nitric acid, 40 mass percent (red fuming) | | Rapid disintegration | 8, 16 (VII) |
| Oleic acid, 100 percent | a | None | |
| Oxalic acid | | No disintegration. When applied to concrete, oxalic acid forms calcium oxalate, which protects concrete against acetic acid, carbon dioxide, and salt water. Oxalic acid and its salts are poisonous and must not be used on concrete in contact with food or drinking water. | |
| Perchloric acid, 10 mass percent | | Disintegration | 8, 10, 16 (V, VI, VII, VIII) |
| Phosphoric acid, 10 mass percent | a | Slow disintegration | 1, 2, 3, 5, 6, 7, 8, 9, 10, 11, 12, 13, 14, 15, 16 (II, III, V, VI, VII, VIII), 17, 19, 25 |
| Phosphoric acid, 85 mass percent | a | Slow disintegration | 1, 2, 3, 5, 7, 8, 9, 10, 13, 14, 15, 16 (III, V, VI, VII, VIII), 17, 19 |
| Stearic acid | a | Slow disintegration | 5, 6, 7, 8, 9, 10, 11, 12, 13, 15, 16 (II, III, V, VI, VII, VIII), 17, 24, 25 |
| Sulfuric acid, 10 mass percent | a | Rapid disintegration | 5, 6, 7, 8, 9, 10, 12, 13, 14, 15, 16 (II, III, V, VI, VII, VIII), 17, 19, 20, 25 |
| Sulfuric acid, 100 mass percent (oleum) | | Disintegration | 16 (VII), 19 |
| Sulfurous acid | | Rapid disintegration | 6, 7, 9, 10, 11, 12, 13, 16 (II, III, V, VIII), 19, 20, 25 |
| Tannic acid | | Slow disintegration | 1, 2, 3, 6, 7, 8, 9, 10, 11, 12, 13, 16 (II, III, V, VII), 17, 24, 25 |
| Tartaric acid (solution) | a | None; refer to wine under Table 3.1h—Miscellaneous substances | |

American Concrete Institute Copyrighted Material—www.concrete.org

**Table 3.1b—Salts and alkalis; solutions where dry materials generally have no effect**

| Substance | Notes | Effect on concrete | Protective treatments |
|---|---|---|---|
| Acetate, calcium | c | Slow disintegration* | 1, 3, 4, 5, 6, 7, 8, 9, 10, 11, 12, 13, 15, 16 (II, III, V, VI, VII, VIII), 17, 24, 25 |
| Acetate, magnesium | | Slow disintegration* | 1, 3, 4, 5, 6, 7, 8, 9, 10, 11, 12, 13, 15, 16 (II, III, V, VI, VII, VIII), 17 |
| Acetate, potassium | | None* | |
| Acetate, sodium | c | None* | |
| Bicarbonate, ammonium | a | None | |
| Bicarbonate, sodium | a | None | |
| Bisulfate, ammonium | | Disintegration. In porous or cracked concrete, attacks steel. Steel corrosion could cause concrete to spall. | 5, 6, 7, 8, 9, 10, 11, 12, 13, 14, 15, 16 (II, III, V, VI, VIII), 17, 25 |
| Bisulfate, sodium | | Disintegration. In porous or cracked concrete, attacks steel. Steel corrosion could cause concrete to spall. | 5, 6, 7, 8, 9, 10, 11, 12, 13, 14, 15, 16 (II, III, V, VI, VIII), 17 |
| Sulfite, calcium (sulfite solution) | | Rapid disintegration | 7, 8, 9, 10, 12, 13, 16 (II, III, V, VI, VIII), 17, 25 |
| Bromide, sodium | | Slow disintegration. In porous or cracked concrete, attacks steel. Steel corrosion could cause concrete to spall. | 1, 2, 5, 6, 7, 8, 9, 10, 11, 12, 13, 14, 16 (II, III, V, VI, VIII), 17, 24, 25 |
| Carbonate, ammonium | | None | |
| Carbonate, potassium | | None | |
| Carbonate, sodium | | None | |
| Chlorate, sodium | | Slow disintegration | 1, 4, 6, 7, 8, 9, 10, 16 (VI, VII, VIII), 17, 19, 24 |
| Chloride, calcium†<br>Chloride, potassium<br>Chloride, sodium*<br>Chloride, strontium | a, c<br>a, c<br>a, c<br>a, c | None, unless concrete is alternately wet and dry with the solution. Concentrated $CaCl_2$ solutions, however, disintegrate concrete, whereas weak solutions do not. In porous or cracked concrete, attacks steel. Steel corrosion could cause concrete to spall (Concrete Construction Problem Clinic 1976; Portland Cement Association 2012). | 1, 3, 4, 5, 6, 7, 8, 9, 10, 11, 12, 13, 15, 16 (II, III, V, VI, VII, VIII), 17, 21, 24, 25 |
| Chloride, ammonium<br>Chloride, copper<br>Chloride, ferric (iron)<br>Chloride, ferrous<br>Chloride, magnesium†<br>Chloride, mercuric<br>Chloride, mercurous<br>Chloride, zinc | a<br><br><br><br>a | Slow disintegration. In porous or cracked concrete, attacks steel. Steel corrosion could cause concrete to spall. | 1, 3, 4, 5, 6, 7, 8, 9, 10, 11, 12, 13, 15, 16 (II, III, V, VI, VII, VIII), 17, 24, 25 |
| Chloride, aluminum | | Rapid disintegration | 1, 3, 4, 5, 6, 7, 8, 9, 10, 11, 12, 13, 15, 16 (II, III, V, VI, VIII), 17, 25 |
| Chromate, sodium | | None | |
| Cyanide, ammonium<br>Cyanide, potassium<br>Cyanide, sodium | | Slow disintegration | 7, 8, 9, 10, 12, 13, 16 (II, III), 17, 24, 25 |
| Dichromate, potassium | | Disintegration | 1, 2, 6, 7, 8, 9, 10, 11, 12, 13, 15, 16 (II, III, V, VI, VIII), 17, 24, 25 |
| Dichromate, sodium | | Slow disintegration with dilute solutions | 1, 2, 6, 7, 8, 9, 10, 11, 12, 13, 15, 16 (II, III, V, VI, VIII), 17, 24, 25 |
| Ferrocyanide, sodium | | None | |
| Fluoride, ammonium<br>Fluoride, sodium | | Slow disintegration | 3, 4, 8, 9, 10, 13, 16 (I, III, V, VIII), 17, 24 |
| Fluosilicate, magnesium | n | None. Reacts to harden older concrete when wet. | |
| Formate, potassium<br>Formate, sodium | a<br>a | None | |
| Hexametaphosphate, sodium | | Slow disintegration | 5, 6, 7, 8, 9, 10, 12, 13, 15, 16 (II, III, V), 17, 24, 25 |
| Hydroxide, ammonium<br>Hydroxide, barium<br>Hydroxide, calcium<br>Hydroxide, potassium, 15 mass percent<br>Hydroxide, sodium, 10 mass percent | <br><br>a<br>j<br>a, j | None | |

American Concrete Institute Copyrighted Material—www.concrete.org

**Table 3.1b—Salts and alkalis; solutions where dry materials generally have no effect (cont.)**

| Substance | Notes | Effect on concrete | Protective treatments |
|---|---|---|---|
| Hydroxide, potassium, 25 mass percent<br>Hydroxide, sodium, 20 mass percent | j<br>a, j | Disintegration. Use of calcareous aggregate lessens attack. | 5, 7, 8, 10, 12, 13, 14, 15, 16, (carbon and graphite brick; II, III), 17, 25 |
| Nitrate, calcium<br>Nitrate, ferric<br>Nitrate, zinc | | None | |
| Nitrate, lead<br>Nitrate, magnesium<br>Nitrate, potassium<br>Nitrate, sodium | <br><br>a<br>a | Slow disintegration | 2, 5, 6, 7, 8, 9, 10, 11, 12, 13, 16 (II, III, V, VI, VII, VIII), 17, 20, 24, 25 |
| Nitrate, ammonium | | Disintegration | 2, 5, 6, 8, 9, 10, 11, 12, 13, 16 (II, III, V, VI, VII, VIII), 17, 20, 25 |
| Nitrite, sodium | a | Slow disintegration | 1, 2, 5, 6, 7, 8, 9, 10, 12, 13, 16 (II, III), 17, 24, 25 |
| Orthophosphate, sodium (dibasic and tribasic) | | None | |
| Oxalate, ammonium | | None | |
| Perborate, sodium | | Slow disintegration | 1, 4, 7, 8, 9, 10, 13, 16 (IV, VI, VII, VIII), 17, 24 |
| Permanganate, potassium | | None, unless potassium sulfate is present. | |
| Persulfate, potassium | | Disintegration of concrete with inadequate sulfate resistance | 1, 2, 5, 7, 8, 9, 10, 12, 13, 16 (II, III, V, VI, VIII), 17, 24, 25 |
| Phosphate, sodium (monobasic) | | Slow disintegration | 5, 6, 7, 8, 9, 10, 12, 15, 16 (II, III), 17, 25 |
| Pyrophosphate, sodium | | None | |
| Stannate, sodium | | None | |
| Sulfate, ammonium | a | Disintegration | 5, 6, 7, 8, 9, 10, 11, 12, 13, 14, 15, 16 (II, III, V, VI, VII, VIII), 17, 25 |
| Sulfate, aluminum<br>Sulfate, calcium<br>Sulfate, cobalt<br>Sulfate, copper<br>Sulfate, ferric<br>Sulfate, ferrous (iron vitriol)<br>Sulfate, magnesium (epsom salt)<br>Sulfate, manganese<br>Sulfate, nickel<br>Sulfate, potassium<br>Sulfate, potassium aluminum (alum)<br>Sulfate, sodium<br>Sulfate, zinc | <br>a<br><br><br>a<br>a<br>a<br><br><br><br>a<br>a | Disintegration of concrete with inadequate sulfate resistance. Concrete products cured in high-pressure steam are highly resistant to sulfates. | 1, 3, 4, 5, 6, 7, 8, 9, 10, 11, 12, 13, 15, 16, (II, III, V, VI, VII, VIII), 17, 24, 25 |
| Sulfide, copper<br>Sulfide, ferric<br>Sulfide, potassium | | None, unless sulfates are present | 7, 8, 9, 10, 12, 13, 15, 16 (II, III, V, VI, VIII), 17, 24, 25 |
| Sulfide, sodium | | Slow disintegration | 6, 7, 8, 9, 10, 11, 12, 13, 15, 16 (II, III), 17, 25 |
| Sulfide, ammonium | | Disintegration | 7, 8, 9, 10, 12, 13, 15, 16 (I, II, III, V), 17, 25 |
| Sulfite, sodium | a | None unless sulfates are present | 1, 2, 5, 6, 7, 8, 9, 10, 11, 12, 13, 15, 16 (II, III, V), 17, 24, 25 |
| Sulfite, ammonium | a | Disintegration | 8, 9, 10, 12, 15, 16 (II, III, V, VIII), 17, 25 |
| Superphosphate, ammonium | | Disintegration | 8, 9, 10, 12, 13, 15, 16 (II, III, V), 17,19 |
| Tetraborate, sodium (borax) | | Slow disintegration | 5, 6, 7, 8, 9, 10, 11, 12, 13, 15, 16 (II, III, V, VI, VII, VIII), 17, 24, 25 |
| Tetrachloride, carbon | | Impervious concrete is required to prevent loss from penetration. Sometimes used in food, processing, or both and requires compatible coating. Refer to "Tetrachloride, carbon" under Table 3.1c—Solvents and alcohols. | |
| Thiosulfate, sodium | | Slow disintegration of concrete with inadequate sulfate resistance. | 1, 2, 5, 6, 7, 8, 9, 10, 12, 13, 15, 16, (II, III, V), 17, 24, 25 |
| Thiosulfate, ammonium | | Disintegration | 8, 9, 12, 13, 15, 16 (III, V), 17, 25 |

[j]Refer to "Deicers and anti-icers" under Table 3.1h—Miscellaneous substances.

[a]Frequently used as deicer for concrete pavements. Any substance used as a deicer on concrete could increase scaling if the concrete contains insufficient entrained air. For more information, refer to "Deicers and anti-icers" under Table 3.1h—Miscellaneous substances, and Cody et al. (1996), National Cooperative Highway Research Program (2007), and Kozikowski et al. (2007). Shil et al. (2009) and Sutter et al. (2005) have demonstrated destructive expansive damage due to the use of deicers not related to freezing-and-thawing cycling.

Note: If concrete is made with reactive aggregates, disruptive expansion could occur from sodium and potassium salts.

American Concrete Institute Copyrighted Material—www.concrete.org

**Table 3.1c—Petroleum oils**

| Substance | Notes | Effect on concrete | Protective treatments |
|---|---|---|---|
| Heavy oil below 35 Baumé* | | None | |
| Paraffin should not be used on masonry | q | | |
| Gasoline<br>Kerosene<br>Light oil above 35 Baumé<br>Ligroin<br>Lubricating oil*<br>Machine oil*<br>Mineral spirits | | None. Impervious concrete is required to prevent loss from penetration, and surface treatments are generally used. | 1, 2, 8, 10, 11, 12, 14, 16 (II, III, V, VI), 17, 19, 24, 25 |
| Mineral oil | a | Slow disintegration if fatty oils are present | |
| Gasoline, high octane | | None. Surface treatments are generally used to prevent contamination with alkalis in concrete. | 10, 11, 14, 17, 24, 25 |

*Could contain some vegetable or fatty oils; concrete should be protected from such oils.

**Table 3.1d—Coal tar distillates**

| Substance | Notes | Effect on concrete | Protective treatments |
|---|---|---|---|
| Alizarin<br>Anthracene<br>Carbazole<br>Chrysen<br>Pitch | | None | |
| Benzol (benzene)<br>Cumol (cumene)<br>Phenanthrene<br>Toluol (toluene)<br>Xylol (xylene) | | None. Impervious concrete is required to prevent loss from penetration, and surface treatments are generally used. | 1, 2, 11, 12, 16 (II, III, V, VI, VII), 19, 24 |
| Creosote<br>Cresol<br>Dinitrophenol<br>Phenol, 5 mass percent | | Slow disintegration | 1, 2, 16 (III, V, VII), 17, 19, 24 |

American Concrete Institute Copyrighted Material—www.concrete.org

## Table 3.1e—Solvents and alcohols

| Substance | Notes | Effect on concrete | Protective treatments |
|---|---|---|---|
| Carbon tetrachloride | | None. Impervious concrete is required to prevent loss of alcohol from penetration, and surface treatments are generally used. | 1, 2, 10, 12, 16 (II, III, V, VII), 24, 25 |
| Ethyl alcohol | a | None. Impervious concrete is required to prevent loss of alcohol from penetration, and surface treatments are generally used. Frequently used as deicer for airplanes. Heavy spillage on concrete containing insufficient entrained air could cause surface scaling. | 1, 2, 5, 7, 10, 12, 13, 14, 16 (II, III, V, VI, VII, VIII), 17, 19, 24 |
| Ethyl ether | | None. Impervious concrete is required to prevent loss of ether from penetration, and surface treatments are generally used. | 11, 12, 16 (III, V), 19, 24, 25 |
| Methyl alcohol | | None. Impervious concrete is required to prevent loss of alcohol from penetration, and surface treatments are generally used. | 1, 2, 5, 7, 10, 12, 13, 14, 16 (II, III, V, VI, VII, VIII), 17, 19, 24 |
| Methyl ethyl ketone | | None. Impervious concrete is required to prevent loss of ketone from penetration, and surface treatments are generally used. | 16 (III, V), 17, 19, 24 |
| Methyl isoamyl ketone | | None. Impervious concrete is required to prevent loss of ketone from penetration, and surface treatments are generally used. | 16 (III, V), 17, 24 |
| Methyl isobutyl ketone | | None. Impervious concrete is required to prevent loss of ketone from penetration, and surface treatments are generally used. | 16 (III, V), 17, 24 |
| Perchloroethylene | | None. Impervious concrete is required to prevent loss of perchloroethylene from penetration, and surface treatments are generally used. | 12, 16 (II, III, V), 24, 25 |
| t-Butyl alcohol | | None. Impervious concrete is required to prevent loss of alcohol from penetration, and surface treatments are generally used. | 1, 2, 5, 7, 10, 12, 13, 14, 16 (II, III, V, VI, VII, VIII), 17, 19, 24, 25 |
| Trichloroethylene | | None. Impervious concrete is required to prevent loss of trichloroethylene from penetration, and surface treatments are generally used. | 1, 2, 12, 16 (II, III, V, g), 24, 25 |
| Acetone | | None. Impervious concrete is required to prevent loss of acetone from penetration, and surface treatments are generally used. Acetone could, however, contain acetic acid as impurity. Refer to Table 3.1a—Acids. | 1, 2, 16 (III, V, VII), 17, 19, 24 |
| Carbon disulfide | a | Slow disintegration possible | 1, 2, 11, 16 (III, V, VII), 24, 25 |
| Glycerin (glycerol) | a | Slow disintegration possible | 1, 2, 3, 4, 7, 10, 11, 12, 13, 16 (II, III, V, VI, g), 17, 24, 25 |
| Ethylene glycol | c | Slow disintegration. Frequently used as deicer for airplanes. Heavy spillage on concrete containing insufficient entrained air could cause surface scaling. | 1, 2, 7, 10, 12, 13, 14, 16 (II, III, V, VI, VII, VIII), 17, 24, 25 |

## Table 3.1f—Vegetable oils

| Substance | Notes | Effect on concrete | Protective treatments |
|---|---|---|---|
| Rosin and rosin oil | | None | |
| Turpentine | | Mild attack and considerable penetration. Impervious concrete is required to prevent loss from penetration, and surface treatments are generally used. | 1, 2, 10, 11, 12, 14, 16 (II, III, V), 24, 25 |
| Almond | a | Slow disintegration. For expensive cooking oils, use 20. | 1, 2, 8, 10, 11, 12, 14, 16 (II, III, V, VI), 17, 24, 25 |
| Linseed* | a | | |
| Olive | a | | |
| Peanut | a | | |
| Poppyseed | a | | |
| Soybean* | a | | |
| Tung* | | | |
| Walnut | a | | |
| Margarine | a | Slow disintegration, faster with melted margarine. | 1, 2, 8, 10, 11, 12, 13, 16 (II, III, V, VI), 24, 25 |
| Castor | | Disintegration, especially if exposed to air. | 1, 2, 8, 10, 11, 12, 14, 16 (II, III, V, VI), 17, 25 |
| Cocoa bean | a | | |
| Cocoa butter | a | | |
| Coconut | a | | |
| Cottonseed | a | | |
| Mustard | a | | |
| Rapeseed | a | | |

*Applied in thin coats, the material quickly oxidizes and has no effect. The effect indicated is for constant exposure to the substance in liquid form.

American Concrete Institute Copyrighted Material—www.concrete.org

## Table 3.1g—Fats and fatty acids (animal)

| Substance | Notes | Effect on concrete | Protective treatments |
|---|---|---|---|
| Fish liquor | g | Disintegration | 3, 8, 10, 12, 13, 16 (II, III, V, VI), 17, 25 |
| Fish oil | a | Slow disintegration with most fish oils | 1, 2, 3, 8, 10, 12, 13, 16 (II, III, V, VI), 17, 24, 25 |
| Whale oil | a | Slow disintegration | 1, 2, 3, 8, 10, 12, 13, 16, (II, III, V, VI), 17, 24, 25 |
| Neatsfoot oil<br>Tallow and tallow oil | | Slow disintegration | 1, 2, 3, 8, 10, 12, 13, 16 (II, III, V, VI), 17, 24, 25 |
| Beef fat<br>Horse fat<br>Lamb fat | a<br><br>a | Slow disintegration with solid fat, faster with melted | 1, 2, 3, 8, 10, 12, 13, 16 (II, III, V, VI), 17, 24, 25 |
| Lard and lard oil | a | Slow disintegration, faster with oil | 1, 2, 3, 8, 10, 12, 13, 16 (II, III, V, VI), 17, 24, 25 |
| Slaughterhouse wastes | g, s | Disintegration due to organic acids | 8, 10, 12, 13, 16 (II, III, V), 24, 25 |

## Table 3.1h—Miscellaneous substances

| Substance | Notes | Effect on concrete | Protective treatments |
|---|---|---|---|
| Alum | a | Refer to "Sulfate, potassium aluminum," under Table 3.1b—Salts and alkalis. | |
| Ammonia, liquid | | None, unless it contains harmful ammonium salts. Refer to Table 3.1b—Salts and alkalis. | |
| Ammonia, vapors | | Possible slow disintegration of moist concrete and steel attacked in porous or cracked moist concrete. | 8, 9, 10, 12, 13, 16 (I, II, III, VI), 17, 24, 25 |
| Ashes, cold | c | Harmful if wet, when sulfides and sulfates leach out. Refer to "Sulfate, sodium," under Table 3.1b—Salts and alkalis. | 1, 2, 3, 8, 9, 10, 13, 16 (II, III, V), 24, 25 |
| Ashes, hot | c | Thermal expansion | 16 (calcium aluminate cement, fire-clay, and refractory-silicate-clay mortars) |
| Automobile and diesel exhaust gases by action of carbonic, nitric, or sulfurous acid. Refer to Table 3.1a—Acids. | k | Possible disintegration of moist concrete | 1, 5, 8, 10, 12, 16 (II, III, V), 24, 25 |
| Baking soda (sodium bicarbonate) | a | None. | |
| Beer | a, f | No progressive disintegration, but in beer storage and fermenting tanks a special coating is used to guard against beer contamination. Beer could contain, as fermentation products, acetic, carbonic, lactic, or tannic acids. Refer to Table. 3.1a—Acids. | 8, 10, 12, 16 (II, III, VI), 17, 24, 25 |
| Bleaching solution | a | Refer to specific chemical, such as hypochlorous acid, sodium hypochlorite, and sulfurous acid. | |
| Borax (salt) | | Refer to "Tetraborate, sodium," under Table 3.1b—Salts and alkalis. | |
| Brine | a | Refer to "Chloride, sodium," or other salts under Table 3.1b—Salts and alkalis. | |
| Bromine | | Disintegration if bromine is gaseous, or if a liquid containing hydrobromic acid and moisture. | 10, 13, 16 (VI, VII) |
| Buttermilk | a, f | Slow disintegration due to lactic acid | 2, 3, 4, 7, 8, 9, 10, 11, 12, 13, 16 (II, III, V, VI), 17, 24, 25 |
| Butyl stearate | | Slow disintegration | 8, 9, 10, 16 (II, III, V) |
| Carbon dioxide | a, d | Gas could cause permanent shrinkage or carbonation. Carbonation will not harm plain (nonreinforced) concrete; however, steel embedded in carbonated concrete is prone to corrosion. Refer to "Carbonic acid" under Table 3.1a—Acids, if moisture is present in carbon dioxide gas. | 1, 2, 3, 6, 8, 9, 10, 11, 12, 13, 15, 16 (II, III, V, VI, VIII), 17, 24, 25 |
| Caustic soda | a | Refer to hydroxide, sodium under Table 3.1b—Salts and alkalis. | |
| Chile saltpeter | | Refer to "Nitrate, sodium," under Table 3.1b—Salts and alkalis. | |
| Chlorine gas | | Slow disintegration of moist concrete | 2, 8, 9, 10, 16 (VI, VII), 17 |
| Chrome plating solutions | l | Slow disintegration | 7, 8, 9, 10, 16 (VI, VII), 20 |
| Cider | a, f | Slow disintegration. Refer to "Acetic acid" under Table 3.1a—Acids. | 1, 2, 9, 10, 12, 14, 16 (II, III, V, VI, g), 17, 24, 25 |
| Cinders cold and hot | c, p | Refer to Table 3.1a—Acids. | |

American Concrete Institute Copyrighted Material—www.concrete.org

**Table 3.1h—Miscellaneous substances (cont.)**

| Substance | Notes | Effect on concrete | Protective treatments |
|---|---|---|---|
| Coal | p | None, unless coal is high in pyrites (sulfide or iron) and moisture. Sulfides leaching from damp coal could oxidize to sulfurous or sulfuric acid, or ferrous sulfate. Refer to Table 3.1a—Acids and Table 3.1b—Salts and alkalis. Rate is greatly retarded by deposit of an insoluble film. | 1, 2, 3, 6, 7, 8, 9, 10, 12, 13, 16 (II, III, V, VIII), 17, 24, 25 |
| Coke | p | Sulfides leaching from damp coke could oxidize to sulfurous or sulfuric acid. Refer to Table 3.1a—Acids. | 1, 2, 3, 6, 7, 8, 9, 10, 12, 13, 16 (II, III, V, VIII), 24, 25 |
| Copper plating solutions | m | None | |
| Corn syrup (glucose) | a, f | Slow disintegration | 1, 2, 3, 7, 8, 9, 10, 12, 13, 16 (II, III, V), 17, 22, 25 |
| Deicers and anti-icers | c | Chlorides (calcium, magnesium, and sodium) and non-chlorides (calcium magnesium acetate, potassium and sodium acetates and formates, urea, and ethyl alcohol) cause scaling of concrete. Air-entrained concrete does not need added protection from deicers. Potassium acetate deicers or anti-icers and, to a lesser extent, potassium formate and sodium acetate or formate could accelerate alkali-silica reaction when reactive aggregates are present (Rangaraju et al. 2005). | 50 mass percent solution of boiled linseed oil in kerosene, soybean oil, modified castor oil, cottonseed oil, sand-filled epoxy, coal-tar epoxy, 21,* 22 |
| Distiller's slop | | Slow disintegration due to lactic acid | 1, 8, 9, 10, 12, 13, 15, 16 (II, III, V, VI, VIII), 17, 24, 25 |
| Fermenting fruits, grains, vegetables, or extracts | a, f | Slow disintegration. Industrial fermentation processes produce lactic acid. Refer to Table 3.1a—Acids | 1, 2, 3, 8, 9, 10, 12, 16 (II, III, V), 17, 24, 25 |
| Flue gases | d, k | Hot gases (400 to 1100°F [200 to 600°C]) cause thermal stresses. Cooled, condensed sulfurous, hydrochloric acids disintegrate concrete slowly. | 9 (high melting), 16 (VII, fireclay mortar) |
| Formaldehyde, 37 mass percent (formalin) | | Slow disintegration due to formic acid formed in solution | 2, 5, 6, 8, 10, 11, 12, 13, 14, 16 (II, III, V, VI, VII, VIII), 17, 20, 24, 25 |
| Fruit juices | a, f | Little, if any, effect for most fruit juices as tartaric and citric acids do not appreciably affect concrete. Sugar fermentation and other acids cause disintegration. | 1, 2, 3, 6, 7, 8, 9, 10, 11, 12, 16 (II, III, V), 17, 25 |
| Gas water | h | Ammonium salts seldom present in sufficient quantity to disintegrate concrete. | 9, 10, 12, 16 (II, III) |
| Glyceryl tristearate | | None | |
| Honey | a | None | |
| Hydrogen sulfide | | Slow disintegration in moist oxidizing environments where hydrogen sulfide converts to sulfurous acid. | 1, 2, 5, 6, 7, 8, 9, 10, 11, 12, 13, 16 (II, III, V, VI, VII, VIII), 17, 19, 24, 25 |
| Iodine | | Slow disintegration. In porous or cracked concrete, attacks steel. Steel corrosion could cause concrete to spall. | 1, 2, 6, 10, 12, 13, 16 (II, III, V, VII), 17, 24, 25 |
| Lead refining solution | n, v | Slow disintegration | 1, 2, 6, 8, 9, 10, 12, 16 (carbon and graphite brick; II, III, V, VIII), 17, 20 |
| Leuna saltpeter | | Disintegration. Refer to ammonium nitrate and ammonium sulfate. | 5, 6, 8, 9, 10, 11, 12, 13, 16 (II, III, V, VI, VII, VIII), 17 |
| Lignite oils | | Slow disintegration if fatty oils present | 1, 2, 6, 8, 10, 12, 16 (II, III, V, VI), 24, 25 |
| Lye: Refer to "Hydroxide, sodium" and "Hydroxide, potassium," under Table 3.1b—Salts and alkalis | | | |
| Manure | f | Slow disintegration | 1, 2, 8, 9, 10, 12, 13, 16 (II, III, V), 24, 25 |
| Marsh, fermenting | f | Slow disintegration due to acetic and lactic acids and sugar. Refer to Table 3.1a—Acids. | 1, 8, 9, 10, 12, 13, 16 (II, III) |
| Milk | a, f | None, unless milk is sour. Then lactic acid disintegrates concrete slowly. | 3, 4, 8, 9, 10, 11, 12, 13, 16 (II, III, VI), 17, 24, 25 |
| Mine water, waste | | Sulfides, sulfates, or acids present disintegrate concrete and attack steel in porous or cracked concrete. | 1, 2, 5, 8, 9, 10, 12, 13, 15, 16 (II, III, V, VI, VIII), 17, 24, 25 |
| Molasses | a | Slow disintegration at temperatures of 120°F (50°C) or more. | 1, 2, 7, 8, 9, 10, 12, 13, 16 (II, III, V), 17 |

American Concrete Institute Copyrighted Material—www.concrete.org

**Table 3.1h—Miscellaneous substances (cont.)**

| Substance | Notes | Effect on concrete | Protective treatments |
|---|---|---|---|
| Nickel plating solutions | m, r | Slow disintegration due to nickel ammonium sulfate | 2, 5, 6, 7, 8, 9, 10, 13, 16 (III, V,VI), 17, 24, 25 |
| Niter: refer to "Nitrate, potassium" under Table 3.1b—Salts and alkalis | | | |
| Ores | | Sulfides leaching from damp ores could oxidize to sulfuric acid or ferrous sulfate. Refer to these materials under Table 3.1a—Acids and Table 3.1b—Salts and alkalis. | 2, 9, 10, 12, 13, 15, 16 (II, III, V, VI, VII), 17, 24, 25 |
| Pickling brine | a | Steel attacked in porous or cracked concrete. Refer to Table 3.1b—Salts and alkalis, "Boric acid," or "Sugar (sucrose)." | 1, 7, 8, 9, 10, 12, 13, 16 (II, III, V, VIII), 17, 24, 25 |
| Sal ammoniac: refer to "Chloride, ammonium" under Table 3.1b—Salts and alkalis | | | |
| Sal soda: refer to "Carbonate, sodium" under Table 3.1b—Salts and alkalis | | | |
| Saltpeter: refer to "Nitrate, potassium" under Table 3.1b—Salts and alkalis | | | |
| Sauerkraut | a, f | Slow disintegration possible due to lactic acid. Flavor impaired by concrete. | 1, 2, 8, 9, 10, 12, 13, 16 (II, III, V, VI), 17, 24, 25 |
| Seawater | | Disintegration of concrete with inadequate sulfate resistance and steel attacked in porous or cracked concrete. | 1, 2, 5, 6, 7, 8, 9, 10, 11, 12, 13, 14, 15, 16, (II, III, V, VI), 17, 24, 25 |
| Sewage and sludge | | Usually not harmful. Refer to "Hydrogen sulfide." | |
| Silage | f | Slow disintegration due to acetic, butyric, and lactic acids, and sometimes fermenting agents of hydrochloric or sulfuric acids. Refer to Table 3.1a—Acids. | 3, 4, 8, 9, 10, 12, 16 (II, III, V, VI), 24, 25 |
| Sodium hypochlorite | | Slow disintegration | 7, 8, 9, 10, 13, 16 (IV, VI), 17, 24, 25 (aliphatic only) |
| Sugar (sucrose) | a, f | None with dry sugar on thoroughly cured concrete. Sugar solutions could slowly disintegrate concrete. | 1, 2, 3, 7, 8, 9, 10, 12, 13, 15, 16 (II, III, V, VI), 17 |
| Sulfite liquor | | Disintegration | 1, 2, 3, 5, 6, 8, 9, 10, 12, 13, 16 (II, III, V, VI, VIII), 17, 19, 24, 25 |
| Sulfur dioxide | a | None if dry. With moisture, sulfur dioxide forms sulfurous acid. | 2, 5, 6, 8, 9, 10, 12, 13, 16 (II, III, V, VI, VII, VIII), 17, 19, 24, 25 |
| Tanning bark | | Slow disintegration possible if damp. Refer to "Tanning liquor." | 1, 2, 3, 6, 8, 9, 10, 11, 12, 13, 16 (II, III, V), 17, 24, 25 |
| Tanning liquor | | None with most liquor, including chromium. If liquor is acid, it disintegrates concrete. | 1, 2, 3, 5, 6, 8, 9, 10, 11, 12, 13, 16 (II, III, V), 17 |
| Tobacco | | Slow disintegration if organic acids present | 1, 8, 9, 10, 12, 13, 16 (II, III, V, VI), 17 |
| Trisodium phosphate | | None | |
| Urea | a, c | None. Refer to "Deicers and anti-icers." | |
| Urine | | None, but steel attacked in porous or cracked concrete | 7, 8, 10, 12, 13, 16 (II, III, V), 24, 25 |
| Vinegar (refer to acetic acid) | a | Slow disintegration due to acetic acid | 9, 10, 12, 16 (II, III, V, VIII), 17, 24, 25 |
| Washing soda (sodium carbonate) | | None | |
| Water, soft (<75 ppm of carbonate hardness) | | Leaching of hydrated lime by flowing water in porous or cracked concrete | 2, 3, 4, 8, 9, 10, 12, 13, 16 (II, III, V, VI, VIII), 17, 24, 25 |
| Whey | a, f | Slow disintegration due to lactic acid | 3, 4, 5, 7, 8, 9, 10, 12, 13, 16 (II, III, V, VI, VIII), 17, 24, 25 |
| Wine | a, f | None, but taste of first wine batch could be affected unless concrete has been given tartaric acid treatment. Solutions from wine-making process can cause slow disintegration. | For fine wines, two or three applications of tartaric acid solution, 1 lb (320 g) tartaric acid in 3 pt (1 L) of water, 2, 8, 10, 12, 16 (II), 20, 24, 25 |
| Wood pulp | | None | |
| Zinc refining solutions | | Disintegration if hydrochloric or sulfuric acids present. | 8, 9, 10, 12, 13, 16 (II, III, V, VI, VIII), 17, 25 |
| Zinc slag | | Zinc sulfate (refer to Table 3.1b—Salts and alkalis) could be formed by oxidation. | 8, 9, 10, 12, 13, 16 (II, III, V, VI, VIII), 17, 24, 25 |

*Impermeable materials, such as most epoxies, should not be used on exterior slabs on ground or other concrete where moisture can freeze under the coating. The freezing water can cause surface delamination under the impermeable coating.

American Concrete Institute Copyrighted Material—www.concrete.org

## Protective Treatments for Concrete Containments

Concrete Containments

All concrete containments will be protected against degradation from exposure to damaging chemicals. The coatings will cover the top of the containment and extend up the full height of the containment walls. Cast-in-place trenches or sumps will also receive the same protection as the main containment.

The potential for damage from chemical attack will be based on the recommendations in ACI 515.2R-13, "Guide to Selecting Protective Treatments for Concrete," Tables 3.1a through 3.1h.

The protection systems will be supplied by Carboline, St. Louis, MO. An equivalent system by another supplier may be substituted if it meets or exceeds the protection provided by the Carboline products specified in this document.

Containments will be protected by one of the following systems. System selection will be based on the expected chemical exposures, and are listed here in order of increasing resistance:

- Sanitile 944SL (100% solids, epoxy, good chemical resistance, forklift traffic resistance)
- Semstone 140 (100% solids, high performance epoxy lining system for concrete)
- Semstone 145 (100% solids, high performance novolac epoxy lining system for concrete)
- Semstone 870 AFRC (high performance, vinyl ester lining system)
- Semstone 245 (100% solids, high performance novolac epoxy lining system for concrete)

Minimum system thickness for the Semstone Series is 60 mils. A thicker system, up to 125 mils, may be required for aggressive chemicals or wheeled traffic. The 125 mil systems are generally reinforced with fiberglass cloth.

All systems will be installed over the manufacturer's recommended primer. Bare concrete surfaces will be prepared in accordance with the manufacturer's recommendations prior to primer application.

All systems have special details at the wall-to-mat interface, and at construction and contraction joints. All special details will be incorporated into the specifications for the work. Installation of liner systems will be limited to Contractors trained and authorized by Carboline.

All construction joints in concrete will also have a chemically-resistant waterstop, Hydrotite CJ-0725-3K, as manufactured by Sika Corporation, Lyndhurst, NJ. The waterstop is a second line of defense in case of failure of the primary coating system, and also prevents groundwater from penetrating the joint from the outside and damaging the protective coating.

Precast Concrete Drainage Products

Precast concrete trench drains will be polymer concrete, series 9814, pre-sloped and flat sections as supplied by Jay R. Smith Manufacturing Company, Montgomery, Al. Precast concrete sumps will be model 9864-TM (top) and 9868 –BS (bottom), by the same supplier. Trenches and sumps will be fabricated with polymer concrete, using the vinyl ester mix where required for

severe chemical exposure. The precast sections will be cast in the reinforced concrete foundation, with a minimum of 6 inches of reinforced concrete at the sides and bottom.

Polymer concrete has superior chemical resistance compared to standard concrete. The trenches and sumps will be coated with a chemically resistant coating system if the required resistance is not provided by the polyester or vinyl ester concrete.

Trench Drain and Sump Grating

All trenches and sumps will have either polyester or vinyl ester fiberglass grating. These gratings are resistant to most chemicals and ultraviolet degradation. Vinyl ester grating will be used in the areas with the more aggressive chemical exposure.

Copies of technical data sheets and typical details for all products are included for reference.

product data carboline

# Sanitile® 944 SL

## Selection & Specification Data

**Generic Type** 100% Solids Self-Leveling Epoxy

**Description** Epoxy floor coating for use on metal and concrete surfaces. Provides durable floor finish with good resistance to common chemicals and daily forklift traffic. Provides an cost effective solution to floor coating needs.

**Features**
- High gloss finish
- Good chemical resistance
- Suitable for use in USDA inspected facilities
- Very good abrasion resistance
- Direct-to-concrete capability

**Color** Light Gray (C705), Machine Gray (0754)

**Gloss** High Gloss

**Primer** Sanitile 900, Sanitile 1340 WB or self priming.

**Dry Film Thickness** 6.0 - 15.0 mils (152 - 381 microns) per coat

**Solids Content** By Volume 100% +/- 1%

**Theoretical Coverage Rate** 1604 $ft^2$ at 1 mil (39 $m^2$/l at 25 microns)
267 $ft^2$ at 6 mils (7 $m^2$/l at 150 microns)
107 $ft^2$ at 15 mils (3 $m^2$/l at 375 microns)

Allow for loss in mixing and application.

**VOC Values** As Supplied 0.0 lbs./gal (0g/l)

**Dry Temp. Resistance** Continuous: 200 °F (93 °C)
Non-Continuous: 250 °F (121 °C)

## Substrates & Surface Preparation

**Steel** Steel substrates to be coated should be abrasive blasted to a near white metal finish (SSPC-10 or NACE-2) with a 2 to 3 mils anchor profile.

**Concrete** Reference SSPC-13/NACE-6 and ICRI 03732 on proper surface cleaning and profiling of concrete substrate. Refer to ASTM F 2170 and ASTM F 1869 to determine amount of moisture in concrete substrate. Contact Carboline technical service in cases where moisture content is higher than 75% RH or 3 lbs./1000 sq.ft./24 hr period. Concrete should be properly cured and have the following characteristics:
Substrate tensile strength of at least 300 psi.
A pH in the range of 7 to 11.
The surface must show open pores throughout and have a sandpaper texture.

## Mixing & Thinning

**Mixing** Mix Part A and Part B separately first for 30 seconds. Combine Part A and part B in a 3 to 1 ratio and power mix for 2 minutes. Do not whip air into mixture. DO NOT USE PARTIAL KITS. No sweat-in or induction time is required. Thinning is not recommended.

**Thinning** Not recommended.

**Ratio** 3:1

## Mixing & Thinning

**Pot Life** 30-60 mins @ 75°F (24°C) and less at higher temperatures. Pot life ends when coating becomes to viscous to use.

## Application Equipment Guidelines

Listed below are general equipment guidelines for the application of this product. Job site conditions may require modifications to these guidelines to achieve the desired results.

**Brush & Roller (General)** Use a short-nap mohair roller cover with solvent resistant core and a rubber or EPDM squeegee. For best results condition roller before application to minimize lint or loose fibers. A high quality solvent resistant brush may be used for hard to reach areas.

## Application Conditions

| Condition | Material | Surface | Ambient | Humidity |
|---|---|---|---|---|
| Minimum | 60 °F (16 °C) | 50 °F (10 °C) | 50 °F (10 °C) | 10% |
| Maximum | 85 °F (29 °C) | 85 °F (29 °C) | 90 °F (32 °C) | 80% |

Apply coating while concrete temperature is descending to reduce the chance of out-gassing or pin holing.

## Curing Schedule

| Surface Temp. & 50% Relative Humidity | Dry to Receive Light Traffic | Dry to Recoat | Dry to Topcoat Maximum | Final Cure Time | Tack Free |
|---|---|---|---|---|---|
| 70 °F (21 °C) | 12 Hours | 8 Hours | 24 Hours | 7 Days | 4 Hours |

## Cleanup & Safety

**Cleanup** Use MEK, Toluene, or Xylene. In case of spillage, absorb and dispose of in accordance with local governments regulations. Use adequate ventilation.

**Safety** Read and follow all caution statements on this product data sheet and on the MSDS for this product. Employ normal workmanlike safety precautions.

**Ventilation** When used in enclosed areas, thorough air circulation must be used during and after application until the coating is cured. The ventilation system should be capable of preventing the solvent vapor concentration from reaching the lower explosion limit for the solvents used. User should test and monitor exposure levels to insure all personnel are below guidelines. If not sure or if not able to monitor levels, use MSHA / NIOSH approved respirator.

## Packaging, Handling & Storage

**Shelf Life** 24 months

When stored indoors at 75°F (24°C)in recommended storage conditions in original unopened containers.

**Shipping Weight (Approximate)** Shipping Weight: (Approx) 9.3/gal. (4.2 kg/gal)



To the best of our knowledge the technical data contained herein is true and accurate on the date of publication and is subject to change without prior notice. User must contact Carboline Company to verify correctness before specifying or ordering. No guarantee of accuracy is given or implied. We guarantee our products to conform to Carboline quality control. We assume no responsibility for coverage, performance or injuries resulting from use. Liability, if any, is limited to replacement of products. NO OTHER WARRANTY OR GUARANTEE OF ANY KIND IS MADE BY CARBOLINE. EXPRESS OR IMPLIED, STATUTORY, BY OPERATION OF LAW, OR OTHERWISE, INCLUDING MERCHANTABILITY AND FITNESS FOR A PARTICULAR PURPOSE. Carboline® and Carboguard® are registered trademarks of Carboline Company.

# Sanitile® 944 SL

## Packaging, Handling & Storage

| | |
|---|---|
| **Storage Temperature & Humidity** | 40-110°F (4-43°C)<br>0-90% Relative Humidity |
| **Flash Point (Setaflash)** | Part A: 225°F (107°C)<br>Part B: 220°F (93°C) |
| **Packaging** | 1 gallon, 4 gallon, 40 gallon, and full 55 gallon drum sizes available. |

carboline
Coatings · Linings · Fireproofing
2150 Schuetz Rd., St. Louis, MO 63146
Tel: 314-644-1000 Toll-Free: 800-848-4645
www.carboline.com

An RPM Company

S944



To the best of our knowledge the technical data contained herein is true and accurate on the date of publication and is subject to change without prior notice. User must contact Carboline Company to verify correctness before specifying or ordering. No guarantee of accuracy is given or implied. We guarantee our products to conform to Carboline quality control. We assume no responsibility for coverage, performance or injuries resulting from use. Liability, if any, is limited to replacement of products. NO OTHER WARRANTY OR GUARANTEE OF ANY KIND IS MADE BY CARBOLINE, EXPRESS OR IMPLIED, STATUTORY, BY OPERATION OF LAW, OR OTHERWISE, INCLUDING MERCHANTABILITY AND FITNESS FOR A PARTICULAR PURPOSE. Carboline® and Carboguard® are registered trademarks of Carboline Company.

product data carboline®

# SEMSTONE® 140

## PRODUCT DESCRIPTION

Semstone 140 is a 100% solids, high performance, epoxy lining system designed for concrete. Semstone 140 is a semi-leveling coating which may be applied as an aggregate filled and/or reinforced coating system. Semstone 140 is specially formulated to withstand some of industry's most aggressive chemicals including acids, caustics, solvents, and various wastewater exposures including $H_2S$ fumes commonly seen in waste streams.

## USES, APPLICATIONS

- Process Slabs
- Tank Farm Floors
- Chemical Loading and Unloading Areas
- Spill Containment Areas
- Wastewater exposures

## PRODUCT ADVANTAGES

Semstone 140 is a two-component system that possesses the following characteristics:

- Excellent resistance to chemical attack
- Excellent abrasion and impact resistance
- Exceptional thermal shock resistance
- Superior bonding qualities
- High cohesive strength
- Low permeability
- Low odor

## CHEMICAL RESISTANCE

Semstone 140 is formulated to resist a variety of chemical solutions. Please consult Carboline Technical Service Department for specific recommendations.

## PACKAGING

Semstone 140 is available in 1-gallon and 5-gallon units.

A 1 gallon unit consists of:
1 1 gallon can of Part A (resin)
1 1 quart can of Part B (hardener)

A 5 gallon unit consists of:
1 5 gallon pail of Part A (resin)
1 1 gallon can of Part B (hardener)

## COVERAGE

Semstone 140 will cover 1,604 mils sq. ft./gal. For estimating purposes, one gallon of Semstone 140 will cover 64 sq. ft./6.95 sq. m at a thickness of 25 mils/0.63 mm. Application thickness may vary from 30-150 mils/0.75-3.8 mm, depending on expected service conditions (i.e., chemical exposure, temperature, traffic load and other mechanical abuse, immersion service vs. splash-spill, etc.). Consult Carboline's Technical Service Department for specific thickness recommendations. In addition, coverage rates will be affected by the condition of the surface being coated (degraded vs. smooth, steel vs. concrete, etc.).

## STORAGE CONDITIONS

Keep product tightly sealed in its original container until ready for use. Store at 50-85°F/10-29°C out of direct sunlight. The cure mechanism of this product is not affected for a minimum of 24 months. Film build (per coat) decreases with age. *Fresh:* Over 60 mils; *3-6 months:* 50-30 mils; *After 6 months:* Less than 30 mils. Follow intercoat preparation requirements. Twenty-four hours before application, all materials (components A and B, aggregate, etc.) should be stored at 70-85°F/21-29°C to facilitate handling.

## PHYSICAL CHARACTERISTICS

| | |
|---|---|
| **Compressive Strength** | 14,000 psi (ASTM C-579: AFC) |
| **Tensile Strength** (ASTM D-638) | Neat: 6,300 psi<br>Reinforced: 8,600 psi |
| **Flexural Strength** (ASTM D-790)<br>(ASTM C-580) | Neat: 9,500 psi<br>Reinforced: 15,800 psi<br>Aggregate Filled: 6,100 psi |
| **Flexural Modulus of Elasticity** (ASTM D-790)<br>(ASTM C-580) | Neat: $4.7 \times 10^6$ psi<br>Reinforced: $7.7 \times 10^6$ psi<br>Aggregate Filled: $11.0 \times 10^6$ psi |
| **Hardness** | Neat: 75 (ASTM D-2240, Shore D) |
| **Bond Strength** (ASTM D-4541) | > 400 psi<br>(100% concrete failure) |
| **Water Vapor Transmission** | 0.0120 grams/hr./ft$^2$ (ASTM E-96) |
| **Permeability** | 0.0042 perm. -in. (ASTM E-96) |
| **Weight per Mixed Gallon** | 10.0 lbs. |
| **Pot Life @ 75°F** | 45 to 60 min* |
| **Cure Times @ 75°F** | Dry to Touch: 12 hrs<br>Firm: 24 hrs<br>Chemical Service: 36 hrs |
| **Flammability** | Non-flammable |

* Significantly less at elevated temperatures

## SUBSTRATE PREPARATION

### *General*

Proper preparation is critical to ensure an adequate bond. The substrate must be dry and free of all wax, grease, oils, fats, soil, loose or foreign materials and laitance. Laitance and unbonded cement particles must be removed by mechanical methods, i.e., abrasive blasting or scarifying. Other contaminants may be removed by scrubbing with a heavy-duty industrial detergent and rinsing with clean water. For recommendations or additional information regarding substrate preparation, please contact Carboline's Technical Service Department.

### *Concrete*

Concrete should be properly cured for 28 days and have the following characteristics:

- Substrate tensile strength of at least 300 psi.
- pH in the range of 7 to 11.

The surface must show open pores throughout and have a sandpaper texture.

### *Steel*

Equipment base plates, etc. to be coated along with the concrete should be abrasive blasted to a near white metal finish. SSPC-10 or NACE-2, with a 1 to 2 mils anchor profile.

### *Masking*

Mask surfaces that are not to be coated. This material is difficult to remove once applied.



To the best of our knowledge the technical data contained herein is true and accurate on the date of publication and is subject to change without prior notice. User must contact Carboline Company to verify correctness before specifying or ordering. No guarantee of accuracy is given or implied. We guarantee our products to conform to Carboline quality control. We assume no responsibility for coverage, performance or injuries resulting from use. Liability, if any, is limited to replacement of products. NO OTHER WARRANTY OR GUARANTEE OF ANY KIND IS MADE BY CARBOLINE, EXPRESS OR IMPLIED, STATUTORY, BY OPERATION OF LAW, OR OTHERWISE, INCLUDING MERCHANTABILITY AND FITNESS FOR A PARTICULAR PURPOSE. Carboline® and Semstone® are registered trademarks of Carboline Company.

# SEMSTONE® 140

## APPLICATION GUIDELINES

Before mixing and applying any material, make sure environmental conditions are satisfactory for application. For optimal working conditions, substrate temperature must be between 60°F/15°C and 80°F/27°C. Measure the surface temperature with a surface thermometer. Cold areas must be heated until the slab temperature is above 50°F/10°C. This will allow the material to achieve a proper cure. Also, a cold sub-strate will make the material stiff and difficult to apply. Warm areas or areas in direct sunlight must be shaded or arrangements made to work during evenings or at night. A warm substrate (60°F/15°C to 80°F/27°C) will aid in the material's workability; however, a hot substrate (80°F/27°C to 100°F/37°C) or a substrate directly in the sun will shorten the material's working time and can cause other phenomenon such as pinholing and bubbling. Substrate temperature should be greater than 5°F/3°C above dew point.

If the temperature is expected to drop below 50°F/10°C use Semstone 140CT.

## APPLICATION

### *Priming*

Apply Semstone 110 Primer in accordance with the product data sheet. Allow the primer to cure prior to the application of Semstone 140.

**Note**: For substrates with out-gassing concerns use Carboguard 1340. Primer should be applied while the substrate temperature is decreasing.

### *Broadcast Application (AFC – Broadcast)*

Pre-mix Part A (resin) for 30 seconds using a Jiffy Mixer. Pour Part B (hardener) into the Part A pail and mix thoroughly for 2 minutes.

Apply a base coat at the specified thickness using a squeegee or a notched trowel. For a 60 mil/1.5 mm system apply a 25 mil/0.63 mm base coat and for a 125 mil/3.1 mm system apply a 50 mil/1.3 mm base coat. Immediately after applying the base coat, begin broadcasting the aggregate until a dry appearance is achieved.

**Note**: The use of a 20/40 mesh aggregate is highly recommended. One gallon of 20/40 mesh silica weighs 13-14 lbs.

After the base coat has cured, remove the loose aggregate. Apply a 10-15 mil/0.25-0.38 mm topcoat using a squeegee or roller.

### *Material Coverages*

Below is a list of coverages for the Broadcast application depending upon desired thickness and texture.

| MATERIAL | Nominal 60 mils/1.5 mm | Nominal 75 mils/1.9 mm | Nominal 125 mils/3.1 mm |
|---|---|---|---|
| Semstone 110 Primer | 200-250 sq.ft./gal. | 200-250 sq.ft./gal. | 200-250 sq.ft./gal. |
| Semstone-140 Base Coat | 64 sq.ft./gal. | 45 sq.ft./gal. | 32 sq.ft./gal. |
| Aggregate | 1.5 lbs./sq.ft. | 1.5 lbs./sq.ft. | 2 lbs./sq.ft. |
| Semstone 140 Topcoat 15 mils | 100 sq.ft./gal. | 100 sq.ft./gal. | 100 sq.ft./gal. |

### *Blended Application (AFC – Blended)*

Pre-mix Part A (resin) for 30 seconds using a Jiffy Mixer. Pour Part B (hardener) into Part A and thoroughly mix for 2 minutes. After mixing Part A and Part B, split the mix into two 5 gallon buckets. While continuing to mix with a Jiffy Mixer, slowly add the aggregate.

**Note**: A 2:1 sand to liquid weight ratio will produce a trowel-like consistency. A 3:1 sand to liquid weight ratio will produce a grout-like consistency.

**Note**: The use of a 20/40 mesh silica aggregate is highly recommended. One gallon of 20/40 mesh silica weighs 13-14 lbs.

Apply the mixture at the desired thickness using a notched trowel.

**Note**: For vertical surfaces add Semstone Thixotrope Part C (pre-measured mixes) or Cab-O-Sil (TS 720) to the blended mix at a 1:2 Cab-O-Sil to liquid volume ratio.

After the surface has cured, the surface must be washed with soap and water prior to re-coating.

**Note**: Surface must be sanded prior to re-coating after an initial cure of 24 hours.

### *Material Coverages*

Below is a list of coverages for the Blended application.

### *Reinforced (AFRC – Broadcast)*

A fiberglass scrim cloth may be added to the 125 mil broadcast system. For the 125 mil broadcast system apply the fiberglass scrim cloth into the base coat prior to applying the aggregate.

### *Reinforced (AFRC – Blended)*

A fiberglass scrim cloth may be added to the 125 blended system. For the 125 mil blended system apply a 25-35 mil/0.63-0.88 mm base coat and lay the fiberglass scrim cloth into the base coat.

**Note**: For a vertical surface, the base coat should be mixed with Cab-O-Sil (TS 720) at a 1:1 volume ratio.

Allow the base coat to become tacky and then apply Semstone 140 mortar at 90-100 mils/2.25-2.50 mm.

Note. Application of base coat, fiberglass scrim cloth, and mortar should be completed in the same day.

## RECOMMENDATIONS

- Apply only on clean, sound, dry and properly prepared substrates.
- Minimum ambient and surface temperatures are 50°F/10°C at the time of application.
- Maximum surface temperatures should not exceed 90°F/32°C during the time of application.
- Substrate temperature should be greater than 5°F/3°C above dew point.
- Application and curing times are dependent upon ambient and surface conditions. Consult Carboline's Technical Service Department if conditions are not within the recommended guidelines.

## PRECAUTIONS

- MEK, Toluene or Xylene solvents are recommended for clean up of Semstone 140 material spills. Use these materials only in strict accordance with manufacturer's recommended safety procedures. Dispose of waste materials in accordance with government regulations.
- The use of a NIOSH/MSHA approved respirator using a #TC-23C-738 organic vapor or a #TC-23C-740 organic vapor acid gas cartridge is mandatory.
- The selection of proper protective clothing and equipment will significantly reduce risk to injury. Body covering apparel, safety goggles and impermeable gloves are highly recommended.
- In case of contact, flush the area with water for 15 minutes and seek medical attention. Wash skin with soap and water.
- Use only with adequate ventilation.

## NOTES

- Specific information regarding chemical resistance of Semstone 140 is available in the Semstone Chemical Resistance Guide.

carboline
Coatings · Linings · Fireproofing
2150 Schuetz Rd., St. Louis, MO 63146
PH: 314-644-1000 Toll-Free: 800-848-4645
www.carboline.com

An RPM Company

January 2013 replaces January 2011

To the best of our knowledge the technical data contained herein is true and accurate on the date of publication and is subject to change without prior notice. User must contact Carboline Company to verify correctness before specifying or ordering. No guarantee of accuracy is given or implied. We guarantee our products to conform to Carboline quality control. We assume no responsibility for coverage, performance or injuries resulting from use. Liability, if any, is limited to replacement of products. NO OTHER WARRANTY OR GUARANTEE OF ANY KIND IS MADE BY CARBOLINE, EXPRESS OR IMPLIED, STATUTORY, BY OPERATION OF LAW, OR OTHERWISE, INCLUDING MERCHANTABILITY AND FITNESS FOR A PARTICULAR PURPOSE. Carboline® and Semstone® are registered trademarks of Carboline Company.

product data carboline

# SEMSTONE® 145

## PRODUCT DESCRIPTION
Semstone 145 is a 100% solids, high performance, novolac epoxy lining system designed for concrete. Semstone 145 is a semi-leveling coating which may be applied as an aggregate filled and/or reinforced coating system. Semstone 145 is specially formulated to withstand some of industry's most aggressive chemicals, including 98% sulfuric acid, as well as many organic chemicals and solvents.

## USES, APPLICATIONS
- Process Slabs
- Tank Farm Floors
- Chemical Loading and Unloading Areas
- Spill Containment Areas

## PRODUCT ADVANTAGES
Semstone 145 is a two-component system that possesses the following characteristics:
- Excellent resistance to chemical attack
- Excellent abrasion and impact resistance
- Exceptional thermal shock resistance
- Superior bonding qualities
- High cohesive strength
- Low permeability
- Low odor

## CHEMICAL RESISTANCE
Semstone 145 is formulated to resist a variety of chemical solutions. Please consult Carboline Technical Service Department for specific recommendations.

## PACKAGING
Semstone 145 is available in 1 gallon and 5 gallon units.

A 1 gallon unit consists of:
1 1 gallon can of Part A (resin)
1 1 quart can of Part B (hardener)

A 5 gallon unit consists of:
1 5 gallon pail of Part A (resin)
1 1 gallon can of Part B (hardener)

## COVERAGE
Semstone 145 will cover 1,604 mils sq. ft./gal. For estimating purposes, one gallon of Semstone 145 will cover 64 sq. ft./5.96 sq. m at a thickness of 25 mils/0.63 mm. Application thickness may vary from 30-150 mils/0.75-3.8 mm, depending on expected service conditions (i.e., chemical exposure, temperature, traffic load and other mechanical abuse, immersion service vs. splash-spill, etc.). Consult Carboline's Technical Service Department for specific thickness recommendations. In addition, coverage rates will be effected by the condition of the surface being coated (degraded vs. smooth, steel vs. concrete, etc.).

## STORAGE CONDITIONS
Store all components between 50-75°F/10-24°C in a dry area. Keep out of direct sunlight. Avoid excessive heat and do not freeze.
Twenty-four hours before application, all materials (components A and B, aggregate, etc.) should be stored at a 70-85°F/21-29°C to facilitate handling.

## SUBSTRATE PREPARATION
### *General*
Proper preparation is critical to ensure an adequate bond. The substrate must be dry and free of all wax, grease, oils, fats, soil, loose or foreign materials and laitance. Laitance and unbonded cement particles must be removed by mechanical methods, i.e., abrasive blasting or scarifying. Other contaminants may be removed by scrubbing with a heavy-duty industrial detergent and rinsing with clean water. For recommendations or additional information regarding substrate preparation, please contact Carboline's Technical Service Department.

### *Concrete*
Concrete should be properly cured for 28 days and have the following characteristics:
- Substrate tensile strength of at least 300 psi.
- pH range of 7 to 11.

The surface must show open pores throughout and have a sandpaper texture.

### *Steel*
Equipment base plates, etc. to be coated along with the concrete should be abrasive blasted to a near white metal finish, SSPC-10 or NACE-2, with a 1 to 2 mils anchor profile.

### *Masking*
Mask surfaces that should not be coated. This material is difficult to remove once applied.

## PHYSICAL CHARACTERISTICS

| | |
|---|---|
| **Compressive Strength** | 16,000 psi (ASTM C-579: AFC) |
| **Tensile Strength** | Neat: 7,000 psi |
| (ASTM D-638) | Reinforced: 8,500 psi |
| **Flexural Strength** | Neat: 9,000 psi |
| (ASTM D-790) | Reinforced: 13,000 psi |
| (ASTM C-580) | Aggregate Filled: 6,200 psi |
| **Flexural Modulus of Elasticity** | Neat: $5.4 \times 10^5$ psi |
| (ASTM D-790) | Reinforced: $7.5 \times 10^5$ psi |
| (ASTM C-580) | Aggregate Filled: $12.6 \times 10^5$ psi |
| **Hardness** | Neat: 75 (ASTM D-2240, Shore D) |
| **Bond Strength** | > 400 psi |
| (ASTM D-4541) | (100% concrete failure) |
| **Water Vapor** | 0.0120 grams/hr./ft$^2$ (ASTM E-96) |
| **Transmission Permeability** | 0.0042 perm. -in (ASTM E-96) |
| **Weight per Mixed Gallon** | 10.4 lbs. |
| **Pot Life @ 75°F** | 45 to 60 min* |
| **Shelf Life** | Part A: 24 months; Part B: 24 months |
| **Cure Times @ 75°F** | Dry to Touch: 12 hrs |
| | Firm: 24 hrs |
| | Chemical Service: 36 hrs |
| **Flammability** | Non-flammable |

*Significantly less at elevated temperatures

## APPLICATION GUIDELINES
Before mixing and applying any material, make sure environmental conditions are satisfactory for application. For optimal working conditions, substrate temperature must be between 60°F/15°C and 80°F/27°C. Measure the surface temperature with a surface thermometer. Cold areas must be heated until the slab temperature is above 60°F/10°C. This will allow the material to achieve a proper cure. Also, a cold substrate will make the material stiff and difficult to apply.



To the best of our knowledge the technical data contained herein is true and accurate on the date of publication and is subject to change without prior notice. User must contact Carboline Company to verify correctness before specifying or ordering. No guarantee of accuracy is given or implied. We guarantee our products to conform to Carboline quality control. We assume no responsibility for coverage, performance or injuries resulting from use. Liability, if any, is limited to replacement of products. NO OTHER WARRANTY OR GUARANTEE OF ANY KIND IS MADE BY CARBOLINE, EXPRESS OR IMPLIED, STATUTORY, BY OPERATION OF LAW, OR OTHERWISE, INCLUDING MERCHANTABILITY AND FITNESS FOR A PARTICULAR PURPOSE. Carboline® and Semstone® are registered trademarks of Carboline Company.

# SEMSTONE® 145

Warm areas or areas in direct sunlight must be shaded or arrangements made to work during evenings or at night. A warm substrate (60°F/15°C to 80°F/27°C) will aid in the material's workability; however, a hot substrate (80°F/27°C to 100°F/37°C) or a substrate directly in the sun will shorten the material's working time and can cause other phenomenon such as pinholing and bubbling. Substrate temperature should be greater than 5°F/3°C above dew point.

If the temperature is expected to drop below 50°F/10°C use Semstone 145CT.

## APPLICATION

### Priming

Apply Semstone 110 Primer in accordance with the product data sheet. Allow the primer to cure prior to application of Semstone 145.

**Note**: For substrates with out-gassing concerns use Carboguard 1340. Primer should be applied while the substrate temperature is decreasing.

### Broadcast Application (AFC – Broadcast)

Pre-mix Part A (resin) for 30 seconds using a Jiffy Mixer. Pour Part B (hardener) into the Part A pail and mix thoroughly for 2 minutes.

Apply a base coat at the specified thickness using a squeegee or a notched trowel. For a 60 mil/1.5 mm system apply a 25 mil/0.63 mm base coat and for a 125 mil/3.1 mm system apply a 50 mil/1.3 mm base coat. Immediately after applying the base coat, begin broadcasting the aggregate until a dry appearance is achieved.

**Note**: The use of a 20/40 mesh aggregate is highly recommended. One gallon of 20/40 mesh silica weighs 13-14 lbs.

After the base coat has cured, remove the loose aggregate. Apply a 10-15 mil/0.25-0.38 mm topcoat using a squeegee or roller.

### Material Coverages

Below is a list of coverages for the Broadcast application depending upon desired thickness and texture.

| MATERIAL | Nominal 60 mils/1.5 mm | Nominal 75 mils/1.9 mm | Nominal 125 mils/3.1 mm |
|---|---|---|---|
| Semstone 110 Primer | 200-250 sq.ft./gal. | 200-250 sq.ft./gal. | 200-250 sq.ft./gal |
| Semstone 145 Base Coat | 64 sq.ft./gal. | 45 sq.ft./gal. | 32 sq.ft./gal. |
| Aggregate | 1.5 lbs./sq. ft | 1.5 lbs./sq. ft | 2 lbs./sq. ft |
| Semstone 145 Topcoat | | | |
| 15 mils | 100 sq. ft./gal. | 100 sq. ft./gal. | 100 sq. ft./gal |
| 30 mils | 53 sq. ft./gal. | 53 sq. ft./gal. | 53 sq. ft./gal. |

### Blended Application (AFC – Blended)

Pre-mix Part A (resin) for 30 seconds using a Jiffy Mixer. Pour Part B (hardener) into Part A and thoroughly mix for 2 minutes. After mixing Part A and Part B, split the mix into two 5 gallon buckets. While continuing to mix with a Jiffy Mixer, slowly add the aggregate.

**Note**: A 2:1 sand to liquid weight ratio will produce a trowel-like consistency. A 3:1 sand to liquid weight ratio will produce a grout-like consistency

**Note**: The use of a 20/40 mesh silica aggregate is highly recommended. One gallon of 20/40 mesh silica weighs 13-14 lbs

Apply the mixture at the desired thickness using a notched trowel.

**Note**: For vertical surfaces add Semstone Thixotrope Part C (pre-measured mixes) or Cab-O-Sil (TS 720) to the blended mix at a 1:2 Cab-O-Sil to liquid volume ratio.

After the surface has cured, the surface must be washed with soap and water prior to re-coating.

**Note**: Surface must be sanded prior to re-coating after an initial cure of 24 hours

### Material Coverages

Below is a list of coverages for the Blended application.

| MATERIAL | Nominal 125 mils / 3.1 mm |
|---|---|
| Semstone 110 Primer | 200-250 sq. ft./gal |
| Semstone 145 CT Mortar 125 mils | 30 sq. ft./gal |

### Reinforced (AFRC – Broadcast)

A fiberglass scrim cloth may be added to the 125 mil broadcast system. For the 125 mil broadcast system apply the fiberglass scrim cloth into the base coat prior to applying the aggregate.

### Reinforced (AFRC – Blended)

A fiberglass scrim cloth may be added to the 125 mil blended system. For the 125 mil blended system apply a 25-35 mil/0.63-0.88 mm base coat and lay the fiberglass scrim cloth into the base coat.

**Note**: For a vertical surface, the base coat should be mixed with Cab-O-Sil (TS 720) at a 1:1 volume ratio.

Allow the base coat to become tacky and then apply Semstone 145 mortar at 90-100 mils/2.25-2.50 mm.

**Note**: Application of base coat, engineering fabric, and mortar should be completed in the same day

## RECOMMENDATIONS

- Apply only on clean, sound, dry and properly prepared substrates.
- Minimum ambient and surface temperatures are 50°F/10°C at the time of application.
- Maximum surface temperatures should not exceed 90°F/32°C during the time of application.
- Substrate temperature should be greater than 5°F/3°C above dew point.
- Application and curing times are dependent upon ambient and surface conditions. Consult Carboline's Technical Service Department if conditions are not within the recommended guidelines

## PRECAUTIONS

- MEK, Toluene or Xylene solvents are recommended for clean up of Semstone 145 material spills. Use these materials only in strict accordance with manufacturer's recommended safety procedures. Dispose of waste materials in accordance with government regulations.
- The use of a NIOSH/MSHA approved respirator using a #TC-23C-738 organic vapor or a #TC-23C-740 organic vapor acid gas cartridge is mandatory.
- The selection of proper protective clothing and equipment will significantly reduce risk to injury. Body covering apparel, safety goggles and impermeable gloves are highly recommended.
- In case of contact, flush the area with water for 15 minutes and seek medical attention. Wash skin with soap and water.
- Use only with adequate ventilation.

## NOTES

- Material Safety Data Sheets on Semstone 145 are available on request.
- Specific information regarding chemical resistance of Semstone 145 is available in the Semstone Chemical Resistance Guide.
- A staff of technical service engineers is available to assist with product application or to answer questions related to Carboline products
- Requests for technical literature or service can be made through local sales representatives and offices, or corporate offices located worldwide.

carboline
Coatings · Linings · Fireproofing
2150 Schuetz Rd., St. Louis, MO 63146
Tel: 314-644-1000 Toll Free: 800-848-4645
www.carboline.com

An RPM Company

November 2011 replaces November 2010

To the best of our knowledge the technical data contained herein is true and accurate on the date of publication and is subject to change without prior notice. User must contact Carboline Company to verify correctness before specifying or ordering. No guarantee of accuracy is given or implied. We guarantee our products to conform to Carboline quality control. We assume no responsibility for coverage, performance or injuries resulting from use. Liability, if any, is limited to replacement of products. NO OTHER WARRANTY OR GUARANTEE OF ANY KIND IS MADE BY CARBOLINE, EXPRESS OR IMPLIED, STATUTORY, BY OPERATION OF LAW, OR OTHERWISE, INCLUDING MERCHANTABILITY AND FITNESS FOR A PARTICULAR PURPOSE. Carboline® and Semstone® are registered trademarks of Carboline Company

product data carboline®

# SEMSTONE® 870 Series

## PRODUCT DESCRIPTION

Semstone 870 is a high performance, vinyl ester lining system specially formulated to withstand some of industry's most aggressive chemicals, including a broad range of organic chemicals. Semstone 870 is a self-leveling coating designed for concrete. It is applied as an aggregate filled and/or reinforced coating system. A cooler temperature version (670 CT) is available on special order. Semstone 870 S is designed for steel substrates and is formulated for spray application. It may be applied using catalyst injection spray equipment.

## USES, APPLICATIONS

- Process slabs
- Tank farm floors
- Flue gas desulfurization equipment
- Chemical loading and unloading areas
- Spill containment areas

## PRODUCT ADVANTAGES

The product is a two-component system that possesses the following characteristics:

- Excellent resistance to chemical attack
- Excellent abrasion and impact resistance
- Exceptional thermal shock resistance
- Superior bonding qualities
- High cohesive strength
- Low permeability
- Low odor

## CHEMICAL RESISTANCE

The products are formulated to resist a variety of chemical solutions. Please consult Carboline Technical Service Department for specific recommendations.

## PACKAGING

Semstone 870/870 CT are available in 1-gal and 5-gal units.

| 1-Gal Unit | 5 gallon unit |
|---|---|
| 1 gal of Part A (resin) | 4.98 gal of Part A (resin) |
| 2.14 oz in a 6 oz. jar of Part B (catalyst) | 11 oz in a quart jar of Part B (catalyst) |

Semstone 870 S (using catalyst injection) is only available in 5-gal units with a special 1-gal catalyst container that treats 60 gals of resin (Part A) at 2.5 ounces/gal usage.

## COVERAGE

Semstone 870 will cover 1,363 mils sq. ft./gal. For estimating purposes, one gallon of Semstone 870 will cover 54 sq. ft./5.02 sq. m at a thickness of 25 mils/0.63 mm. Application thickness may vary from 30-150 mils/0.75-3.6 mm depending on expected service conditions (i.e., chemical exposure, temperature, traffic load and other mechanical abuse, immersion service vs. splash-spill, etc.). Semstone 870 S may be used from 60-100 mils depending on conditions. Consult Carboline's Technical Service Department for specific thickness recommendations.

## STORAGE CONDITIONS

Store all components between 50-65°F/10-18°C in a dry area. Keep out of direct sunlight. Avoid excessive heat and do not freeze. The shelf life is 3 months in the original, unopened container. The catalyst must be stored below 100°F.

Twenty-four hours before application, all materials (components A and B, aggregate, etc.) should be stored at a 60-75°F/18-21°C to facilitate handling.

## PHYSICAL CHARACTERISTICS*

*(based on Semstone 870)*

| | |
|---|---|
| **Compressive Strength** | 17,500 psi (ASTM C-579: AFC) |
| **Tensile Strength** | Neat: 5,300 psi |
| (ASTM D-638) | Reinforced: 10,000 psi |
| **Flexural Strength** | Neat: 8,200 psi |
| (ASTM D-790) | Reinforced: 22,000 psi |
| (ASTM C-580) | Aggregate Filled: 5,800 psi |
| **Flexural Modulus of Elasticity** | Neat: 10.9 x $10^5$ psi |
| (ASTM D-790) | Reinforced: 15.6 x $10^5$ psi |
| (ASTM C-580) | Aggregate Filled: 15.3 x $10^5$ psi |
| **Hardness** | Neat: 80 (ASTM D-2240, Shore D) |
| **Bond Strength** | > 400 psi |
| (ASTM D-4541) | (100% concrete failure) |
| **Water Vapor** | |
| **Transmission** | 0.0120 grams/hr./ft$^2$ (ASTM E-96) |
| **Permeability** | 0.0042 perm. -in. (ASTM E-96) |
| **Weight per Mixed Gallon** | 10.4 lbs. |
| **Pot Life @ 75°F** | 45 to 60 min and less at higher temperatures |
| **Cure Times @ 75°F (870)** | Dry to Touch: 12 hrs |
| | Firm: 24 hrs |
| | Chemical Service: 48 hrs |
| **Cure Times @ 60°F (870 CT)** | Dry to Touch: 12 hrs |
| | Firm: 24 hrs |
| | Chemical Service: 48 hrs |
| **Flammability** | Non-flammable |

* Characteristics are shown to indicate the nature of this product. They represent typical values that would be achieved using commonly used aggregates and reinforcing mesh. Different aggregate blends or reinforcing mesh will alter these values accordingly.

## SUBSTRATE PREPARATION

### *General*

Proper preparation is critical to ensure an adequate bond. The substrate must be dry and free of all wax, grease, oils, fats, soil, loose or foreign materials and laitance. Laitance and unbonded cement particles must be removed by mechanical methods, i.e., abrasive blasting or scarifying. Other contaminants may be removed by scrubbing with a heavy-duty industrial detergent and rinsing with clean water. For recommendations or additional information regarding substrate preparation, please contact Carboline's Technical Service Department.

### *Concrete*

Concrete should be properly cured for 28 days, have a tensile strength of at least 300 psi, and be in the pH range of 7 to 11. The surface must show open pores throughout and have a sandpaper texture.

### *Steel*

Steel should be abrasive blasted to a near white metal finish, SSPC-10 or NACE-2, with a 3-4 mils (75-100 micron) anchor profile.



To the best of our knowledge the technical data contained herein is true and accurate on the date of publication and is subject to change without prior notice. User must contact Carboline Company to verify correctness before specifying or ordering. No guarantee of accuracy is given or implied. We guarantee our products to conform to Carboline quality control. We assume no responsibility for coverage, performance or injuries resulting from use. Liability, if any, is limited to replacement of products. NO OTHER WARRANTY OR GUARANTEE OF ANY KIND IS MADE BY CARBOLINE, EXPRESS OR IMPLIED, STATUTORY, BY OPERATION OF LAW, OR OTHERWISE, INCLUDING MERCHANTABILITY AND FITNESS FOR A PARTICULAR PURPOSE. Carboline® and Semstone® are registered trademarks of Carboline Company.

# SEMSTONE® 870 Series

## APPLICATION GUIDELINES

Before mixing and applying any material, make sure environmental conditions are satisfactory for application. For optimal working conditions, substrate temperature must be between 70°F/21°C and 80°F/27°C. Measure the surface temperature with a surface thermometer. Cold areas must be heated until the slab temperature is above 65°F/18°C. This will allow the material to achieve a proper cure. Also, a cold substrate will make the material stiff and difficult to apply. Warm areas or areas in direct sunlight must be shaded or arrangements made

to work during evenings or at night. A warm substrate (70°F/21°C to 80°F/27°C) will aid in the material's workability; however, a hot substrate (80°F/27°C to 90°F/32°C) or a substrate directly in the sun will shorten the material's working time and can cause other phenomenon such as pinholing and bubbling. Substrate temperature should be greater than 5°F/3°C above dew point.

If the temperature is expected to drop below 65°F/18°C use Semstone 870CT.

## APPLICATION (Concrete)

### *Priming*

Apply Semstone 800 Series Primer in accordance with the product data sheet. Allow the primer to cure prior to application of Semstone 870.

### *Broadcast Application (AFC – Broadcast)*

Pre-mix Part A (resin) for 30 seconds using a Jiffy Mixer. Pour Part B (catalyst) into the Part A pail and mix thoroughly for 2 minutes. Apply a base coat at the specified thickness using a squeegee or a notched trowel. For a 60 mil/1.5 mm system apply a 25 mil/0.63 mm base coat and for a 125 mil/3.1 mm system apply a 50 mil/1.3 mm base coat. Immediately after applying the base coat begin broadcasting the aggregate until a dry appearance is achieved. (**Note**: The use of a 20/40 mesh aggregate is highly recommended. One gallon of 20/40 mesh silica weighs 13-14 lbs.) After the base coat has cured, remove the loose aggregate. Apply a 10-15 mil/0.25-0.38 mm topcoat using a squeegee or roller.

### *Material Coverages*

Below is a list of coverages for the Broadcast application depending upon desired thickness and texture.

| MATERIAL | Nominal 60 mils/1.5 mm | Nominal 75 mils/1.9 mm | Nominal 125 mils/3.1 mm |
|---|---|---|---|
| Semstone 800 Series Primer | 300 sq. ft./carton | 300 sq. ft./carton | 300 sq. ft./carton |
| Semstone 870 Base Coat | 64 sq.ft./gal. | 45 sq.ft./gal. | 32 sq.ft./gal. |
| Aggregate | 1.5 lbs./sq. ft. | 1.5 lbs./sq. ft. | 2 lbs./sq. ft. |
| Semstone 870 Topcoat 15 mil | 100 sq. ft./gal. | 100 sq. ft./gal. | 100 sq. ft./gal. |

### *Blended Application (AFC – Blended)*

Pre-mix Part A (resin) for 30 seconds using a Jiffy Mixer. Pour Part B (catalyst) into Part A and thoroughly mix for 2 minutes. After mixing Part A and Part B, split the mix into two 5-gallon buckets. While continuing to mix with a Jiffy Mixer slowly add the aggregate. Apply the mixture at the desired thickness using a notched trowel.

Notes: A 2:1 sand to liquid weight ratio will produce a trowel-like consistency. A 3:1 sand to liquid weight ratio will produce a grout-like consistency. The use of a 20/40 mesh silica aggregate is highly recommended. One gallon of 20/40 mesh silica weighs 13-14 lbs. For vertical surfaces add Semstone Thixotrope Part C (pre-measured mixes) or Cab-O-Sil (TS 720) to the blended mix at a 1:2 Cab-O-Sil to liquid volume ratio.

If desired, the surface may be recoated after it has finally cured.

**Note**: After an initial cure of 48 hours, the surface must be sanded and solvent wiped prior to recoating.

### *Material Coverages*

Below is a list of coverages for the Blended application.

| MATERIAL | Nominal 125 mils / 3.1 mm |
|---|---|
| Semstone 800 Series Primer | 300 sq.ft./carton |
| Semstone 870 Mortar – 125 mils | 20 sq. ft/gal |

### *Reinforced (AFRC – Broadcast)*

A fiberglass scrim cloth may be added to the 125 mil broadcast system. For the 125 mil broadcast system, apply the fiberglass scrim cloth into the base coat prior to applying the aggregate.

### *Reinforced (AFRC – Blended)*

A fiberglass scrim cloth may be added to the 125 mil blended system. For the 125 mil blended system apply a 25-35 mil/0.63-0.88 mm base coat and lay the the fiberglass scrim cloth into the base coat.

**Note**: For a vertical surface, the base coat should be mixed with Cab-O-Sil (TS 720) at a 1:1 volume ratio.

Allow the base coat to become tacky and then apply Semstone 870 mortar at 90-100 mils/2.25-2.50 mm.

**Note**: Application of base coat, the fiberglass scrim cloth, and mortar should be completed in the same day.

## APPLICATION (Steel)

### *Catalyst Injection Spray*

Pre-mix resin for 60 seconds using a Jiffy Mixer. Catalyst (Activator VE) is supplied in a 1-gal container. Adjust delivery of catalyst to be in the range of 2.5 ounces (acceptable range 2.0 to 5.0 ounces) of catalyst per gallon of resin.

## RECOMMENDATIONS

Apply only on clean, sound, dry and properly prepared substrates.

- Minimum ambient and surface temperatures are 65°F/18°C at the time of application.
- Maximum surface temperatures should not exceed 90°F/32°C during the time of application.
- Substrate temperature should be greater than 5°F/3°C above dew point.
- Application and curing times are dependent upon ambient and surface conditions. Consult Carboline's Technical Service Department if conditions are not within the recommended guidelines.

## PRECAUTIONS

- MEK, Toluene or Xylene solvents are recommended for clean up of Semstone 870 material spills. Use these materials only in strict accordance with manufacturer's recommended safety procedures. Dispose of waste materials in accordance with government regulations.
- The use of a NIOSH/MSHA approved respirator using a #TC-23C-738 organic vapor or a #TC-23C-740 organic vapor acid gas cartridge is mandatory.
- The selection of proper protective clothing and equipment will significantly reduce risk to injury. Body covering apparel, safety goggles and impermeable gloves are highly recommended.
- In case of contact, flush the area with water for 15 minutes and seek medical attention. Wash skin with soap and water.
- Use only with adequate ventilation.

carboline®
Coatings · Linings · Fireproofing
2150 Schuetz Rd., St. Louis, MO 63146
PH: 314-644-1000 Toll-Free: 800-848-4645
www.carboline.com

An RPM Company

November 2012 replaces September 2011

To the best of our knowledge the technical data contained herein is true and accurate on the date of publication and is subject to change without prior notice. User must contact Carboline Company to verify correctness before specifying or ordering. No guarantee of accuracy is given or implied. We guarantee our products to conform to Carboline quality control. We assume no responsibility for coverage, performance or injuries resulting from use. Liability, if any, is limited to replacement of products. NO OTHER WARRANTY OR GUARANTEE OF ANY KIND IS MADE BY CARBOLINE, EXPRESS OR IMPLIED, STATUTORY, BY OPERATION OF LAW, OR OTHERWISE, INCLUDING MERCHANTABILITY AND FITNESS FOR A PARTICULAR PURPOSE. Carboline® and Semstone® are registered trademarks of Carboline Company.

product data carboline®

# SEMSTONE® 245

## PRODUCT DESCRIPTION
Semstone 245 is a 100% solids, high performance, novolac epoxy lining system designed for concrete. Semstone 245 is a semi-leveling coating, it may be applied as an aggregate filled and/or reinforced coating system. Semstone 245 is specially formulated to withstand some of the industry's most aggressive chemicals, specifically chlorinated solvents.

## USES, APPLICATIONS
- Process Slabs
- Tank Farm Floors
- Chemical Loading and Unloading Areas
- Spill Containment Areas

## PRODUCT ADVANTAGES
Semstone 245 is a two-component system that possesses the following characteristics:
- Excellent resistance to chemical attack
- Excellent abrasion and impact resistance
- Exceptional thermal shock resistance
- Superior bonding qualities
- High cohesive strength
- Low permeability
- Low odor

## CHEMICAL RESISTANCE
Semstone 245 is formulated to resist a variety of chemical solutions. Please consult Carboline Technical Service Department for specific recommendations.

## PACKAGING
Semstone 245 is available in 1 gallon and 3 gallon units.

A 1 gallon unit consists of:
1 1 gallon can of Part A (resin)
1 quart can of Part B (hardener)

A 3 gallon unit consists of:
1 5 gallon pail of Part A (resin)
1 1 gallon can of Part B (hardener)

## COVERAGE
Semstone 245 will cover 1,604 mils sq. ft./gal. For estimating purposes, one gallon of Semstone 245 will cover 64 sq. ft./5.95 sq. m at a thickness of 25 mil/0.63 mm. Application thickness may vary from 30-150 mils/0.75-3.8 mm depending upon expected service conditions (i.e., chemical exposure, temperature, traffic load and other mechanical abuse, immersion service vs. splash-spill, etc.). Consult Carboline's Technical Service Department for specific thickness recommendations. In addition, coverage rates will be affected by the condition of the surface being coated (degraded vs. smooth, steel vs. concrete, etc.).

## STORAGE CONDITIONS
Store all components between 50-70°F/10-21°C in a dry area. Keep out of direct sunlight. Avoid excessive heat and do not freeze.

Twenty-four hours before application, all materials (components A and B, aggregate, etc.) should be stored at a 65-75°F/18-24°C to facilitate handling.

## PHYSICAL CHARACTERISTICS

| | |
|---|---|
| **Compressive Strength** | 15,000 psi (ASTM C-579; AFC |
| **Tensile Strength** | Reinforced: 8,000 psi (ASTM D-638 |
| **Flexural Strength** | Neat: 11,000 psi |
| (ASTM D-790) | Reinforced: 14,000 psi |
| (ASTM C-580) | Aggregate Filled: 6,000 psi |
| **Flexural Modulus of Elasticity** | Neat: 8.1 x $10^5$ psi |
| (ASTM D-790) | Reinforced: 9.4 x $10^5$ psi |
| (ASTM C-580) | Aggregate Filled: 14.9 x $10^5$ psi |
| **Hardness** | Neat: 90 (ASTM D-2240, Shore D |
| **Bond Strength** | > 400 psi |
| (ASTM D-4541) | (100% concrete failure) |
| **Water Vapor Transmission** | 0.0120 grams/hr./ft$^2$ (ASTM E-96 |
| **Permeability** | 0.0042 perm.-in. (ASTM E-96 |
| **Weight per Mixed Gallon** | 10.6 lbs |
| **Working Time @ 75°F** | 15 min* |
| **Shelf Life** | 24 months |
| **Cure Times @ 75°F** | Dry to Touch: 12 hrs |
| | Firm: 24 hrs |
| | Chemical Service: 36 hrs |
| **Flammability** | Non-flammable |

* Significantly less at elevated temperatures

## SUBSTRATE PREPARATION
### *General*
Proper preparation is critical to ensure an adequate bond. The substrate must be dry and free of all wax, grease, oils, fats, soil, loose or foreign materials and laitance. Laitance and unbonded cement particles must be removed by mechanical methods, i.e., abrasive blasting or scarifying. Other contaminants may be removed by scrubbing with a heavy-duty industrial detergent and rinsing with clean water. For recommendations or additional information regarding substrate preparation, please contact Carboline's Technical Service Department.

### *Concrete*
Concrete should be properly cured for 28 days and have the following characteristics:
- Substrate tensile strength of at least 300 psi.
- pH in the range of 7 to 11.

The surface must show open pores throughout and have a sandpaper texture.

### *Steel*
Equipment base plates, etc. to be coated along with the concrete should be abrasive blasted to a near white metal finish, SSPC-10 or NACE-2, with a 1 to 2 mils anchor profile.

### *Masking*
Mask surfaces that are not to be coated. This material is difficult to remove once applied.

## APPLICATION GUIDELINES
Before mixing and applying any material, make sure environmental conditions are satisfactory for application. For optimal working conditions, substrate temperature must be between 50°F/10°C and 70°F/21°C. Measure the surface temperature with a surface


To the best of our knowledge the technical data contained herein is true and accurate on the date of publication and is subject to change without prior notice. User must contact Carboline Company to verify correctness before specifying or ordering. No guarantee of accuracy is given or implied. We guarantee our products to conform to Carboline quality control. We assume no responsibility for coverage, performance or injuries resulting from use. Liability, if any, is limited to replacement of products. NO OTHER WARRANTY OR GUARANTEE OF ANY KIND IS MADE BY CARBOLINE, EXPRESSIS OR IMPLIED, STATUTORY, BY OPERATION OF LAW, OR OTHERWISE, INCLUDING MERCHANTABILITY AND FITNESS FOR A PARTICULAR PURPOSE. Carboline® and Semstone® are registered trademarks of Carboline Company.

# SEMSTONE® 245

thermometer. Cold areas must be heated until the slab temperature is above 35°F/2°C. This will allow the material to achieve a proper cure. Also, a cold substrate will make the material stiff and difficult to apply.

Warm areas or areas in direct sunlight must be shaded or arrangements made to work during evenings or at night. A warm substrate (50°F/10°C to 70°F/21°C) will aid in the material's workability; however, a hot substrate (70°F/21°C to 100°F/37°C) or a substrate directly in the sun will shorten the material's working time and can cause other phenomenon such as pinholing and bubbling. Substrate temperature should be greater than 5°F/3°C above dew point.

## APPLICATION

### *Priming*

Apply Semstone 110 Primer in accordance with the product data sheet. Allow the primer to cure prior to application of Semstone 245.

**Note:** For substrates with out-gassing concerns use Carboguard 1340. Primer should be applied while the substrate temperature is decreasing.

### *Broadcast Application (AFC – Broadcast)*

Pre-mix Part A (resin) for 30 seconds using a Jiffy Mixer. Pour Part B (hardener) into the Part A pail and mix thoroughly for 2 minutes.

Apply a base coat at the specified thickness using a squeegee or a notched trowel. For a 60 mil/1.5 mm system apply a 25 mil/0.63 mm base coat and for a 125 mil/3.1 mm system apply a 50 mil/1.3 mm base coat. Immediately after applying the base coat begin broadcasting the aggregate until a dry appearance is achieved.

**Note:** The use of a 20/40 mesh aggregate is highly recommended. One gallon of 20/40 mesh silica weighs 13-14 lbs.

After the base coat has cured, remove the loose aggregate. Apply a 10-15 mil/0.25-0.38 mm topcoat using a squeegee or roller.

### *Material Coverages*

**Below is a list of coverages for the Broadcast application depending upon desired thickness and texture.**

| MATERIAL | Nominal 60 mils/1.5 mm | Nominal 75 mils/1.9 mm | Nominal 125 mils/3.1 mm |
|---|---|---|---|
| Semstone 110 Primer | 200-250 sq. ft./gal. | 200-250 sq. ft./gal. | 200-250 sq. ft./gal. |
| Semstone 245 Base Coat | 64 sq.ft./gal. | 45 sq.ft./gal. | 32 sq.ft./gal. |
| Aggregate | 1.5 lbs./sq. ft. | 1.5 lbs./sq. ft. | 2 lbs./sq. ft. |
| Semstone 245 Topcoat | | | |
| 15 mil | 100 sq. ft./gal. | 100 sq. ft./gal. | 100 sq. ft./gal. |
| 30 mil | 53 sq. ft./gal. | 53 sq. ft./gal. | 53 sq. ft./gal. |

### *Blended Application (AFC – Blended)*

Pre-mix Part A (resin) for 30 seconds using a Jiffy Mixer. Pour Part B (hardener) into Part A and thoroughly mix for 2 minutes. After mixing Part A and Part B, split the mix into two 5 gallon buckets. While continuing to mix with a Jiffy Mixer, slowly add the aggregate.

**Note:** A 2:1 sand to liquid weight ratio will produce a trowel-like consistency. A 3:1 sand to liquid weight ratio will produce a grout-like consistency.

**Note:** The use of a 20/40 mesh silica aggregate is highly recommended. One gallon of 20/40 mesh silica weighs 13-14 lbs.

Apply the mixture at the desired thickness using a notched trowel.

**Note:** For vertical surfaces add Semstone Thixotrope Part C (pre-measured mixes) or Cab-O-Sil (TS 720) to the blended mix at a 1:2 Cab-O-Sil to liquid volume ratio.

After the surface has cured, the surface must be washed with soap and water prior to re-coating.

**Note:** Surface must be sanded prior to re-coating after an initial cure of 24 hours.

### *Material Coverages*

Below is a list of coverages for the Blended application.

| MATERIAL | Nominal - 125 mils/3.1 mm |
|---|---|
| Semstone 110 Primer | 200-250 sq.ft./gal. |
| Semstone 245 Mortar - 125 mils | 20 sq.ft./gal. |

### *Reinforced (AFRC – Broadcast)*

A fiberglass scrim cloth may be added to the 125 mil broadcast system. For the 125 mil broadcast system apply the fiberglass scrim cloth into the base coat prior to applying the aggregate.

### *Reinforced (AFRC – Blended)*

A fiberglass scrim cloth may be added to the 125 mil blended system. For the 125 mil blended system apply a 25-35 mil/0.63-0.88 mm base coat and lay the fiberglass scrim cloth into the base coat.

**Note:** For a vertical surface, the base coat should be mixed with Cab-O-Sil (TS 720) at a 1:1 volume ratio.

Allow the base coat to become tacky and then apply Semstone 245 mortar at 90-100 mils/2.25-2.50 mm.

Note: Application of base coat, engineering fabric, and mortar should be completed in the same day.

## RECOMMENDATIONS

- Apply only on clean, sound, dry and properly prepared substrates.
- Minimum ambient and surface temperatures are 35°F/2°C at the time of application.
- Maximum surface temperatures should not exceed 90°F/32°C during the time of application.
- Substrate temperature should be greater than 5°F/3°C above dew point.
- Application and curing times are dependent upon ambient and surface conditions. Consult Carboline's Technical Service Department if conditions are not within the recommended guidelines.

## PRECAUTIONS

- MEK, Toluene or Xylene solvents are recommended for clean up of Semstone 245 material spills. Use these materials only in strict accordance with manufacturer's recommended safety procedures. Dispose of waste materials in accordance with government regulations.
- The use of a NIOSH/MSHA approved respirator using a #TC-23C-738 organic vapor or a #TC-23C-740 organic vapor acid gas cartridge is mandatory.
- The selection of proper protective clothing and equipment will significantly reduce risk to injury. Body covering apparel, safety goggles and impermeable gloves are highly recommended.
- In case of contact, flush the area with water for 15 minutes and seek medical attention. Wash skin with soap and water.
- Use only with adequate ventilation.

## NOTES

- Material Safety Data Sheets on Semstone 245 are available on request.
- Specific information regarding chemical resistance of Semstone 245 is available in the Semstone Chemical Resistance Guide.
- A staff of technical service engineers is available to assist in product application or to answer questions related to Carboline products.
- Requests for technical literature or service can be made through local sales representatives and offices, or corporate offices located worldwide.

carboline

350 Hanley Industrial Court, St. Louis, MO 63144-1599
314/644-1000 314/644-4617 (fax) www.carboline.com

An RPM Company

May 2009 replaces August 2003

To the best of our knowledge the technical data contained herein is true and accurate on the date of publication and is subject to change without prior notice. User must contact Carboline Company to verify correctness before specifying or ordering. No guarantee of accuracy is given or implied. We guarantee our products to conform to Carboline quality control. We assume no responsibility for coverage, performance or injuries resulting from use. Liability, if any, is limited to replacement of products. NO OTHER WARRANTY OR GUARANTEE OF ANY KIND IS MADE BY CARBOLINE, EXPRESS OR IMPLIED, STATUTORY, BY OPERATION OF LAW, OR OTHERWISE, INCLUDING MERCHANTABILITY AND FITNESS FOR A PARTICULAR PURPOSE. Carboline® and Semstone® are registered trademarks of Carboline Company.

product data carboline®

# SEMSTONE® 110/110 EP

*Formerly SEMSTONE 500*
*Formerly SEMSTONE 110 Primer*

## PRODUCT DESCRIPTION

SEMSTONE 110/110EP Damp-Proof Primer is a two part epoxy that exhibits superior adhesion to concrete and steel. SEMSTONE 110/110EP Damp Proof Primer is used in conjunction with many of Carboline's coatings.

## PACKAGING

SEMSTONE 110/110EP Damp-Proof Primer is packaged in 1.5 gallon units.

A unit of Semstone 110 consists of:
1 1 gallon can of Part A
1 1 gallon can of Part B (short-filled)

A unit of Semstone 110EP consists of:
1 1 gallon can of Part A
1 1 gallon can of Part B (short-filled)
1 bag of Part C

## COVERAGE

A 1.5 gallon unit of Semstone 110 or 110 EP will cover approximately 200 sq. ft./18.6 sq. m

## TYPICAL PROPERTIES

### MIXING RATIO

2 parts Part A to 1 part Part B by volume.

### COLOR

110: Amber
110EP: Buff

### POT LIFE

After mixing, SEMSTONE 110/110EP has a working time of approximately 60 minutes @ 75°F/24°C.

### CURING

Listed below are a few curing schedules that may be used for time and work planning.

| MINIMUM APPLICATION TEMPERATURE | DRY TO TOUCH | MAXIMUM RECOAT |
|---|---|---|
| 50°F/10°C | 24 to 30 Hrs | 4 Days |
| 65°F/18°C | 10 to 12 Hrs | 3 Days |
| 80°F/27°C | 6 to 10 Hrs | 48 Hrs |
| 95°F/35°C | 5 to 8 Hrs | 24 Hrs |

*SEMSTONE 110/110EP may be topped while still wet. Check specific topcoat data sheet or consult Carboline's Technical Service Department for specific instructions.

## STORAGE CONDITIONS

Store all components of SEMSTONE 110/110EP between 50°F/10°C and 90°F/32°C in a dry area, out of direct sunlight. PLEASE HANDLE AND STORE PROPERLY. The shelf life is 2 year in the original, unopened container.

## SURFACE PREPARATION

Proper preparation is critical to ensure an adequate bond. The substrate must be free of all wax, grease, oils, fats, soil, loose or foreign materials, and laitance. Laitance and unbonded cement particles must be removed by mechanical methods, i.e., abrasive blasting or scarifying. Other contaminants may be removed by scrubbing with a heavy duty industrial detergent and rinsing with clean water. The surface must show open pores throughout and have a sand paper texture. For recommendations or additional information regarding substrate preparation, please contact Carboline's Technical Service Department.

## PRIMER APPLICATION

1. Mix Part A resin with Part B hardener until uniform in color and consistency.

2. Apply to prepared surface using flat floor squeegee, paint roller, or brush. Apply in one even coat to thoroughly wet and seal surface. Do not allow to puddle.

**Note**: To avoid potential outgassing problems, Carboline recommends applying Semstone 110 while ambient temperature is descending. As common with all epoxies and novolacs, under certain conditions such as low temperature and high humidity, this product may develop an oily film on its surface known as "blush". This blush should be removed by a soap and water wash prior to any re-coating.

## EPOXY PUTTY APPLICATION

1. Mix Part A resin with Part B hardener until uniform in color and consistency.
2. Add Part C to form a putty consistency and mix thoroughly.
3. Apply to primed surface, working into voids to displace air, using a trowel, squeegee or broad knife.

## CURING

The surface of SEMSTONE 110/110EP will be tack-free in 6-8 hours at 70°F/21°C.

February 2005 replaces August 2003

To the best of our knowledge the technical data contained herein is true and accurate on the date of publication and is subject to change without prior notice. User must contact Carboline Company to verify correctness before specifying or ordering. No guarantee of accuracy is given or implied. We guarantee our products to conform to Carboline quality control. We assume no responsibility for coverage, performance or injuries resulting from use. Liability, if any, is limited to replacement of products. NO OTHER WARRANTY OR GUARANTEE OF ANY KIND IS MADE BY CARBOLINE, EXPRESS OR IMPLIED, STATUTORY, BY OPERATION OF LAW, OR OTHERWISE, INCLUDING MERCHANTABILITY AND FITNESS FOR A PARTICULAR PURPOSE. Carboline® and Semstone® are registered trademarks of Carboline Company.

# SEMSTONE® 110/110 EP

## RECOMMENDATIONS

- Apply only on clean, sound, and properly prepared substrate.
- Substrate temperature should be greater than 5°F/3°C above dew point.
- Application and curing times are dependent upon ambient and substrate conditions. Consult Carboline if conditions are not within recommended guidelines.

## NOTES

- Material Safety Data Sheets on SEMSTONE 110/110EP are available on request.
- Specific information regarding chemical resistance of SEMSTONE 110/110EP is available through Carboline Technical Service.
- A staff of technical service engineers is available to assist in product application, or answer questions related to Carboline products. Requests for technical literature or service can be made through local sales representatives and offices, or corporate offices located throughout the world.

**SAFETY**

READ THIS NOTICE!

SAFETY & MISCELLANEOUS EQUIPMENT

Toluene or Xylene solvents are recommended for clean up of SEMSTONE 110/110EP part A or B material spills. Use these materials only in strict accordance with manufacturers' recommended safety procedures. Dispose of waste materials in accordance with Government Regulations.
For the applicator, the use of a supplied air respirator system is required when handling the product.

The selection of proper protective clothing and equipment will significantly reduce risk to injury. Body covering apparel, safety goggles and impermeable gloves are highly recommended.
In case of contact, flush area with water for 15 minutes and seek medical attention. Wash skin with soap and water.

Use only with adequate ventilation.

carboline

350 Hanley Industrial Court, St. Louis, MO 63144-1599
314/644-1000 314/644-4617 (fax) www.carboline.com

An RPM Company

February 2005 replaces August 2003

To the best of our knowledge the technical data contained herein is true and accurate on the date of publication and is subject to change without prior notice. User must contact Carboline Company to verify corrections before specifying or ordering. No guarantee of accuracy is given or implied. We guarantee our products to conform to Carboline quality control. We assume no responsibility for coverage, performance or injuries resulting from use. Liability, if any, is limited to replacement of products. NO OTHER WARRANTY OR GUARANTEE OF ANY KIND IS MADE BY CARBOLINE, EXPRESS OR IMPLIED, STATUTORY, BY OPERATION OF LAW, OR OTHERWISE, INCLUDING MERCHANTABILITY AND FITNESS FOR A PARTICULAR PURPOSE. Carboline® and Semstone® are registered trademarks of Carboline Company.

product data carboline

# SEMSTONE® 800 Series Primer

## PRODUCT DESCRIPTION

800 Series Primer is a two-component, highly cross-linked vinyl ester priming system that penetrates into concrete and reduces porosity. It is applied to a properly prepared surface prior to the application of the appropriate Carboline lining system. The use of 800 Series Primer ensures a secure bond between the substrate and the lining system, reduces absorption of the lining system's liquids by sealing concrete porosity and makes the overall application of the lining system easier.

## USES, APPLICATIONS

800 Series Primer is designed for use with Semstone 700 Series and 800 Series coating and lining systems. This product should be used as a priming coat prior to application of any of the above systems.

## PACKAGING

800 Series Primer is packaged in units for easy handling. Each unit consists of:

1 carton each containing:
- 2 containers of Part A (liquid) (8 oz. jar)
- 2 containers of Part B (liquid) (partial filled 1 gal.)

## COVERAGE

One unit of 800 Series Primer will cover approximately 300 square feet/27.88 square meters of relatively smooth surface.

A batch of 800 Series Primer is made up of one container of Part A and one container of Part B. Each batch will cover approximately 150 square feet/13.94 square meters.

Since each batch has been proportioned to cover a specific area, the installer should make certain that each single batch is NOT used to cover a larger area. Also, on very rough surfaces, a batch of 800 Series Primer may not cover a full 150 square feet/13.94 square meters — the rougher the surface, the less total area a batch will cover.

## STORAGE CONDITIONS

Prior to mixing, 800 Series Primer components must be stored between 50°F/10°C and 75°F/24°C in a dry area, out of direct sunlight. The 800 Series Part A products are classified as flammable materials. The 800 Series Part A products are organic peroxides. PLEASE HANDLE AND STORE PROPERLY.

## SUBSTRATE PREPARATION

Proper preparation is critical to ensure an adequate bond. The substrate must be dry and free of all wax, grease, oils, fats, soil, loose or foreign materials and laitance. Laitance and unbonded cement particles must be removed by mechanical methods, i.e., abrasive blasting or scarifying. Other contaminants may be removed by scrubbing with a heavy duty industrial detergent and rinsing with clean water. The surface must show open pores throughout and have a sandpaper texture. For recommendations or additional information regarding substrate preparation, please contact Carboline's Technical Service Department.

## MIXING

NOTE: Do not start mixing until the surface is properly prepared and dry, with the temperature of both the 800 Series Primer and the surface at least 60°F/16°C. Empty the contents of Part B (resin) and Part A (curing agent) into a clean mixing container. Mix with a slow speed drill and Jiffy Mixer for 1-1/2 to 2 minutes.

## POT LIFE

After mixing, 800 Series Primer has a working time of approximately 45 minutes at 77°F/25°C. The working time may vary depending on ambient conditions.

## APPLICATION

800 Series Primer may be applied by brush or roller (medium nap). It is important to obtain the proper coverage and not allow the material to puddle in holes or depressions.



To the best of our knowledge the technical data contained herein is true and accurate on the date of publication and is subject to change without prior notice. User must contact Carboline Company to verify correctness before specifying or ordering. No guarantee of accuracy is given or implied. We guarantee our products to conform to Carboline quality control. We assume no responsibility for coverage, performance or injuries resulting from use. Liability, if any, is limited to replacement of products. NO OTHER WARRANTY OR GUARANTEE OF ANY KIND IS MADE BY CARBOLINE, EXPRESS OR IMPLIED, STATUTORY, BY OPERATION OF LAW, OR OTHERWISE, INCLUDING MERCHANTABILITY AND FITNESS FOR A PARTICULAR PURPOSE. Carboline® and Semstone® are registered trademarks of Carboline Company.

# *SEMSTONE®* 800
## *Series Primer*

### RECOMMENDATIONS

- Apply only on clean, sound, dry and properly prepared substrate.
- Minimum ambient and surface temperatures are 55°F/13°C at the time of application.
- Maximum surface temperatures should not exceed 90°F/32°C during application.
- Application and curing times are dependent upon ambient and surface conditions. Please consult Carboline if conditions are not within recommended conditions.

### PRECAUTIONS

- Avoid contact with 800 Series Primer Part A (vinyl ester resin and styrene monomer) and Part B (catalyst/organic peroxide), as they may cause skin, respiratory and eye irritation.
- The use of a NIOSH approved air purifying respirator with organic vapor/acid gas cartridges is required.
- The selection of proper protective clothing and equipment will significantly reduce risk to injury. Body covering apparel, safety goggles and impermeable gloves are highly recommended.
- In the event of accidental eye contact, rinse eyes immediately with water.
- If material is ingested, immediately contact a physician. DO NOT INDUCE VOMITING.
- Use only with adequate ventilation. Inhalation of vapors may cause severe headaches, nausea and possibly unconsciousness.

### NOTES

- Material Safety Data Sheets on 800 Series Primer are available on request.
- A staff of technical service engineers is available to assist in product application, or answer questions related to Carboline products.
- Requests for technical literature or service can be made through local sales representatives and offices, or corporate offices located throughout the world.

carboline

350 Hanley Industrial Court, St. Louis, MO 63144-1599
314/644-1000 314/644-4617 (fax) www.carboline.com

An RPM Company

August 2003 replaces May 2003

To the best of our knowledge the technical data contained herein is true and accurate on the date of publication and is subject to change without prior notice. User must contact Carboline Company to verify correctness before specifying or ordering. No guarantee of accuracy is given or implied. We guarantee our products to conform to Carboline quality control. We assume no responsibility for coverage, performance or injuries resulting from use. Liability, if any, is limited to replacement of products. NO OTHER WARRANTY OR GUARANTEE OF ANY KIND IS MADE BY CARBOLINE, EXPRESS OR IMPLIED, STATUTORY, BY OPERATION OF LAW, OR OTHERWISE, INCLUDING MERCHANTABILITY AND FITNESS FOR A PARTICULAR PURPOSE. Carboline® and Semstone® are registered trademarks of Carboline Company.

product data

carboline®

# SEMSTONE® 805

**Flexible Epoxy Polymer Coating & Lining**

## PRODUCT DESCRIPTION

SEMSTONE 805 is a Flexible Epoxy Polymer Coating & Lining providing a chemical, water and/or abrasion resistant barrier for steel and concrete. SEMSTONE 805 is one of Carboline's most versatile coating systems. Developed as a self-leveling, flexible chemical resistant coating and lining, this two-component system can also be used as a high build coating and lining system with the addition of a third component.

SEMSTONE 805 is a 100% solids, low odor, two component system consisting of Part A and Part B components. It may be applied as a neat system (unfilled), reinforced system, aggregate filled system to extend coverage, or as an aggregate filled reinforced system. A bagged Part C thixotropic agent is added for high build applications. It is most often used with reinforcing fabric (#100) over expansion joints.

## TYPICAL USES AND APPLICATIONS

SEMSTONE 805 offers users a variety of application options for the protection of steel and concrete. It can be used as a chemically resistant seal for expansion joints and other points of movement, and as a reinforced coating system for severely cracked concrete surfaces. With the addition of Part C non-silica thixotropic agent, SEMSTONE 805 can be applied as a high build coating and lining system or as a trowel/caulk grade or putty material.

Consult Carboline's Technical Service Department for specific chemical resistance information.

## HANDLING CHARACTERISTICS

SEMSTONE 805 may be applied using an airless spray unit in accordance with manufacturer's specifications, notched trowel, squeegee, brush or roller. It can be applied as a trowel/caulk grade or putty material with the addition of Part C thixotropic agent.

Depending on expected service conditions application thickness may vary. Consult Carboline Technical Sales Representative for specific thickness recommendations.

When applying as a high build system or to vertical surfaces, the addition of Part C is required.

## PHYSICAL CHARACTERISTICS

**Color**.....Gray
**Solids by Volume**.....100%
**Weight per Mixed Gallon**.....10.1 lbs
**Pot Life@75°F**.....30-to-45 min
**Primer**.....SEMSTONE 110 Damp Proof,
.....SEMSTONE 110-P/S
**Hardness**.....55
(ASTM D-2240 Shore A: neat)
**Abrasion Resistance**.....120 (mg lost)
(ASTM D-1044: neat)
(CS17 wheels - 1000 cycle, 1000 gram) AFC.....40
**Tensile Strength**.....1050 psi
(ASTM D-638: neat)
**Tensile Elongation**.....100%
(ASTM D-638: neat)
**Bond Strength**.....Concrete Failure in Concrete
(ASTM D-4541: (psi))

## PACKAGING

SEMSTONE 805 is packaged in 1-gallon and 2-gallon units. The mix ratio is approximately 1.5:1 by volume

Each unit consists of a pre-measured Part A component and a pre-measured Part B component. A bagged Part C thixotropic agent is available for work on vertical surfaces.

| | 1-Gal Kit | 2-Gal Kit |
|---|---|---|
| Part A | 0.60 gal | 1.20 gal |
| Part B | 0.40 gal | 0.80 gal |

## STORAGE

Keep SEMSTONE 805 products tightly sealed in their original containers until ready for use. Store at 50-to-80°F, out of direct sunlight. Properly stored, SEMSTONE 805 has a minimum shelf life of one year. Refer to the batch number on the label for date of manufacture.



To the best of our knowledge the technical data contained herein is true and accurate on the date of publication and is subject to change without prior notice. User must contact Carboline Company to verify correctness before specifying or ordering. No guarantee of accuracy is given or implied. We guarantee our products to conform to Carboline quality control. We assume no responsibility for coverage, performance or injuries resulting from use. Liability, if any, is limited to replacement of products. NO OTHER WARRANTY OR GUARANTEE OF ANY KIND IS MADE BY CARBOLINE, EXPRESS OR IMPLIED, STATUTORY, BY OPERATION OF LAW, OR OTHERWISE, INCLUDING MERCHANTABILITY AND FITNESS FOR A PARTICULAR PURPOSE. Carboline® and Semstone® are registered trademarks of Carboline Company

# SEMSTONE® 805

***Flexible Epoxy***
***Polymer Coating & Lining***

## PRECAUTIONS

FOR INDUSTRIAL USE ONLY.

When using SEMSTONE 805 products, be aware of these safety precautions:

- Avoid contact with eyes and skin.
- Do not ingest or inhale.
- Always wear chemical goggles, rubber gloves, and appropriate work clothing.
- Wear fresh air hood and make provisions for forced ventilation when working in confined areas.
- Wear fresh air hood or an organic mist respirator when spraying in an open area.
- Prolonged or repeated exposure to this material may cause skin irritation or allergic reaction.
- Refer to material safety data sheets (MSDS) regarding individual components.

## NOTES

- Material Safety Data Sheets on SEMSTONE 805 are available on request.
- A staff of technical service engineers is available to assist in product application, or answer questions related to Carboline products.
- Requests for technical literature or service can be made through local sales representatives and offices, or corporate offices located throughout the world.

carboline

350 Hanley Industrial Court, St. Louis, MO 63144-1599
314/644-1000 314/644-4617 (fax) www.carboline.com

An RPM Company

March 2008 replaces August 2003

To the best of our knowledge the technical data contained herein is true and accurate on the date of publication and is subject to change without prior notice. User must contact Carboline Company to verify correctness before specifying or ordering. No guarantee of accuracy is given or implied. We guarantee our products to conform to Carboline quality control. We assume no responsibility for coverage, performance or injuries resulting from use. Liability, if any, is limited to replacement of products. NO OTHER WARRANTY OR GUARANTEE OF ANY KIND IS MADE BY CARBOLINE, EXPRESS OR IMPLIED, STATUTORY, BY OPERATION OF LAW, OR OTHERWISE, INCLUDING MERCHANTABILITY AND FITNESS FOR A PARTICULAR PURPOSE. Carboline® and Semstone® are registered trademarks of Carboline Company.

# Semstone® Construction Details

carboline®

350 Hanley Industrial Court, St. Louis, MO 63144-1599
314/644-1000 314/644-4617 (fax) www.carboline.com

RPM
An Company

# Treatment for Expansion Joints, Control Joints, and Structural Cracks, Vertical and Horizontal, for Non-Vehicular Traffic

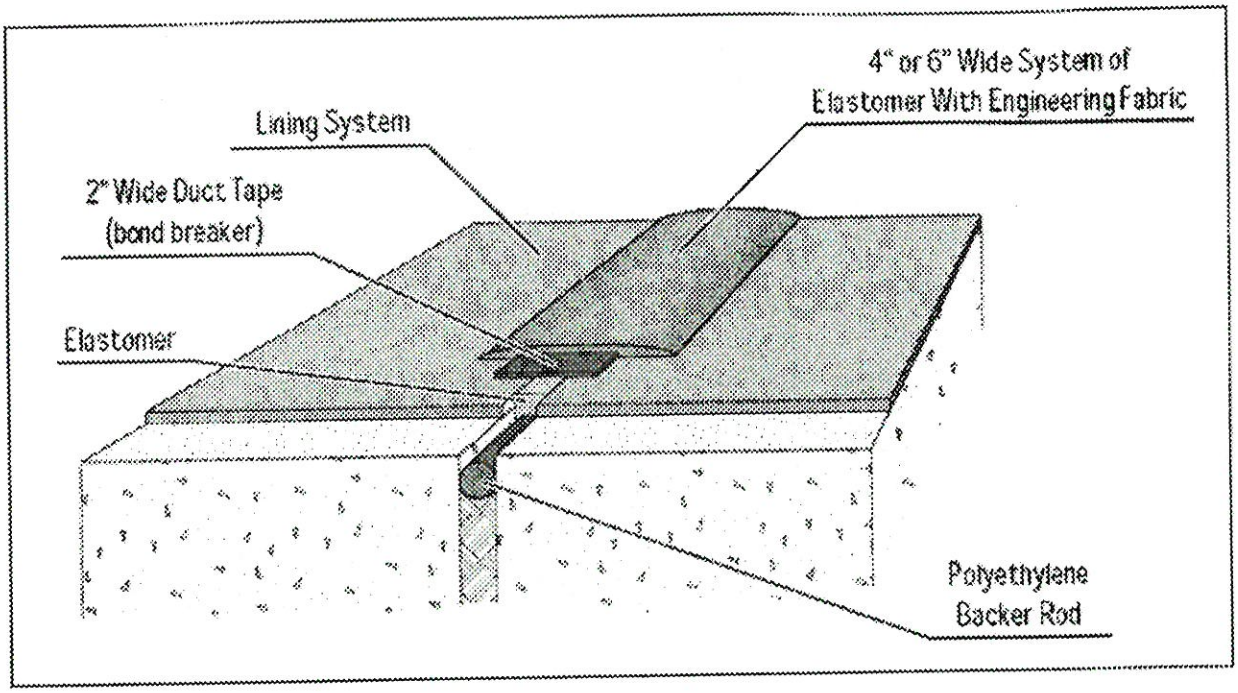


IMPORTANT: Refer to SEMSTONE® product data sheet, application guidelines and Material Safety Data Sheets for specific information about surface preparation, mixing, application and material safety for individual SEMSTONE® products.

1. Maintain joint/crack through coating. Structural cracks can be maintained through the coating by taping over the crack before application of coating, then removing the tape before the coating sets.
2. Prepare bonding surfaces in accordance with instructions recommended in SEMSTONE® Flexible Coating product data sheet and application guidelines.
3. Place 2" wide duct tape (bond-breaker) over joint/crack.
4. Apply SEMSTONE® Primer to area inside boundary tape. Allow to dry tack free.
5. Apply a 50 mil base coat of SEMSTONE® Flexible Coating.
6. Embed a layer of SEMSTONE® Flexible Coating with engineering fabric into the base coat. Width of fabric and overall system depends on job specifications.
7. Apply a 10 mil topcoat of SEMSTONE® Flexible Coating to ensure saturation of fabric.
8. Optional: For a non-skid surface, broadcast angular grit onto the SEMSTONE® Flexible Coating topcoat while wet.

NOTE: Use masking tape to keep boundary tape lines neat and straight. This is only for aesthetics. Remove tape while coating is still wet.

If chemical environment is such that SEMSTONE® Flexible Coating is not sufficient, contact Carboline for alternate recommendations.

# Treatment for Horizontal to Vertical Transition

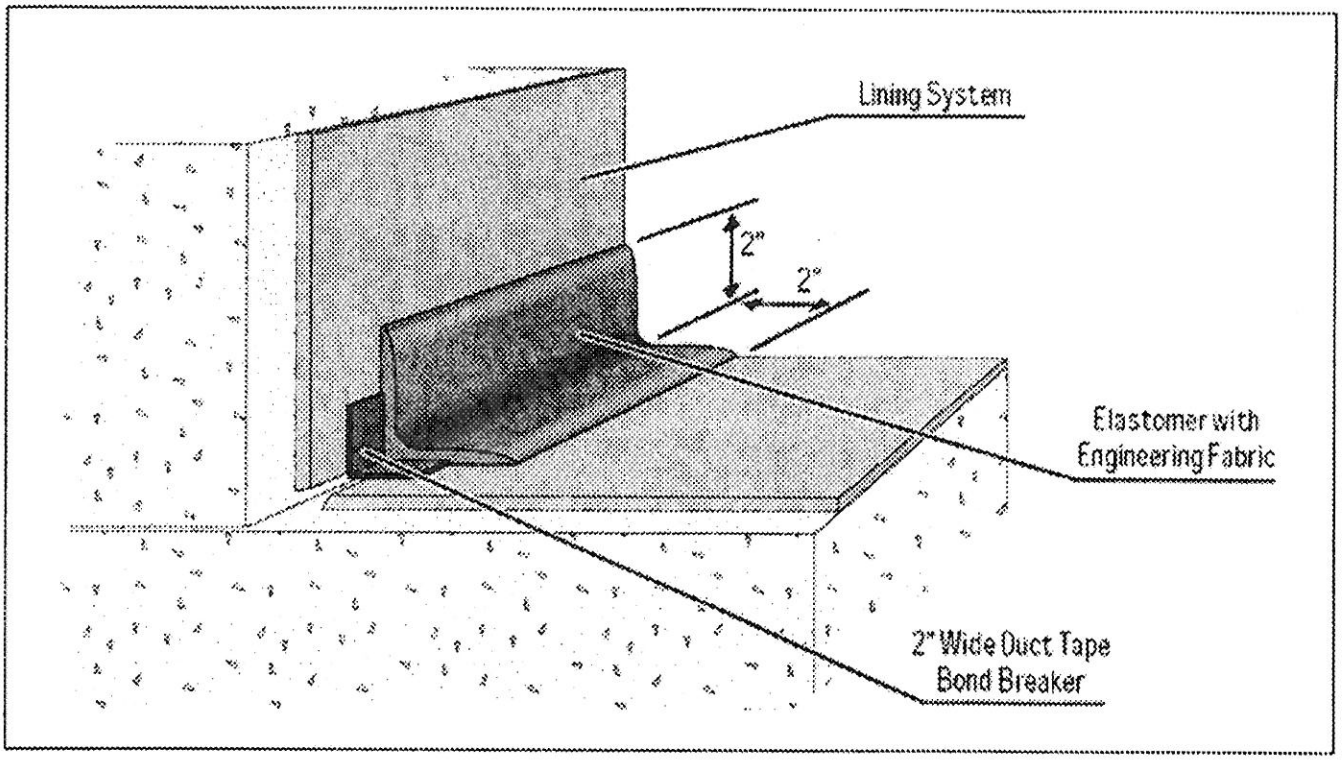


IMPORTANT: Refer to SEMSTONE® product data sheet, application guidelines and Material Safety Data Sheets for specific information about surface preparation, mixing, application and material safety for individual SEMSTONE® products.

1. Prepare bonding surfaces in accordance with instructions found in recommended SEMSTONE® Flexible Coating product data sheet and application guidelines.
2. Install 2" wide duct tape (bond-breaker), centered on the joint.
3. Mix and apply recommended SEMSTONE® Primer to an area 4" wide centered on the joint. Allow to dry tack free.
4. Apply a 50 mil base coat of SEMSTONE® Flexible Coating to the prepared and primed surface.
5. Embed a 4" wide layer of SEMSTONE® Flexible Coating with engineering fabric into the base coat.
6. Apply a 10 mil topcoat of SEMSTONE® Flexible Coating to ensure saturation of fabric.

NOTE: Use masking tape to keep boundary tape lines neat and straight. This is only for aesthetics. Remove tape while coating is still wet.

If chemical environment is such that SEMSTONE® Flexible Coating is not sufficient, contact Carboline for alternate recommendations.

# Treatment for Expansion Joints, Control Joints, and Structural Cracks in Traffic Areas

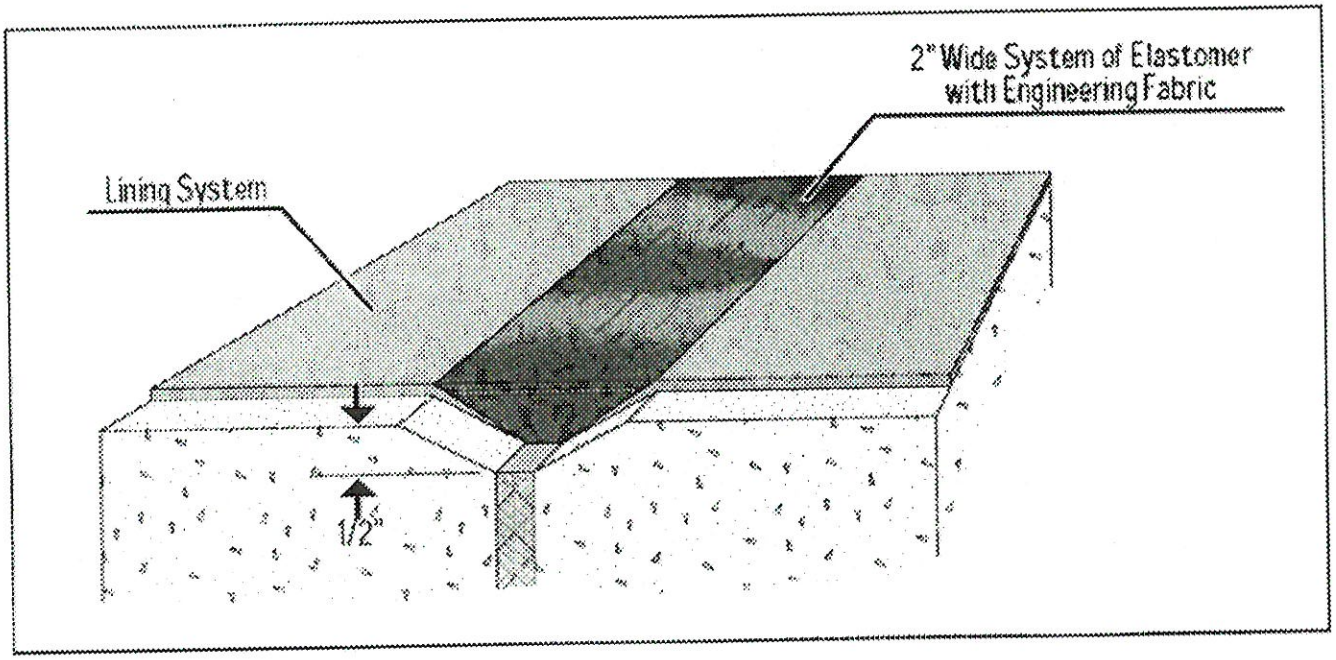


IMPORTANT: Refer to SEMSTONE® product data sheet, application guidelines and Material Safety Data Sheets for specific information about surface preparation, mixing, application and material safety for individual SEMSTONE® products.

Preparation: Expansion and Control Joints

Starting 1" back from the center of the joint, saw-cut a straight line 1/4-1/2" deep parallel with joint. Make this saw-cut on both sides of the joint. Using a chipping gun, chip a taper starting at the saw cut going toward the joint. Remove any existing joint material to finish flush with the bottom of the taper. Remove all dust and debris.

Preparation: Structural Cracks

Using a pneumatic crack chasing tool or chipping gun with a bushing tool attached, follow the crack making a 2" wide x 1/2" deep channel centered on the crack. Remove all dust and debris.

Installation:

1. Prepare bonding surface in accordance with instructions found in product data sheet and application guidelines.
2. Install specified SEMSTONE® coating to the floor surface and extend coating into the taper to joint/crack. Allow to cure to tack free.
3. Prepare surface of coating inside tapered area. Follow instruction for intercoat surface preparation in the technical bulletin and application guidelines for the coating system specified.
4. Apply recommended SEMSTONE® Primer to prepared area. Allow to dry tack free.
5. Fill tapered recess with SEMSTONE® Flexible Coating. Embed a 2" wide strip of SEMSTONE® Flexible Coating with engineering fabric into the surface of the wet SEMSTONE® Flexible Coating. Saturate the fabric with additional SEMSTONE® Flexible Coating. The finished surface of the SEMSTONE® Flexible Coating and fabric should be slightly below the adjacent floor surface.

NOTE: Use masking tape to keep boundary tape lines neat and straight. This is only for aesthetics. Remove tape while coating is still wet.

If chemical environment is such that SEMSTONE® Flexible Coating is not sufficient, contact Carboline for alternate recommendations.

# Loop Treatment for Expansion Joints, Control Joints, and Structural Cracks Intended for Immersion Service

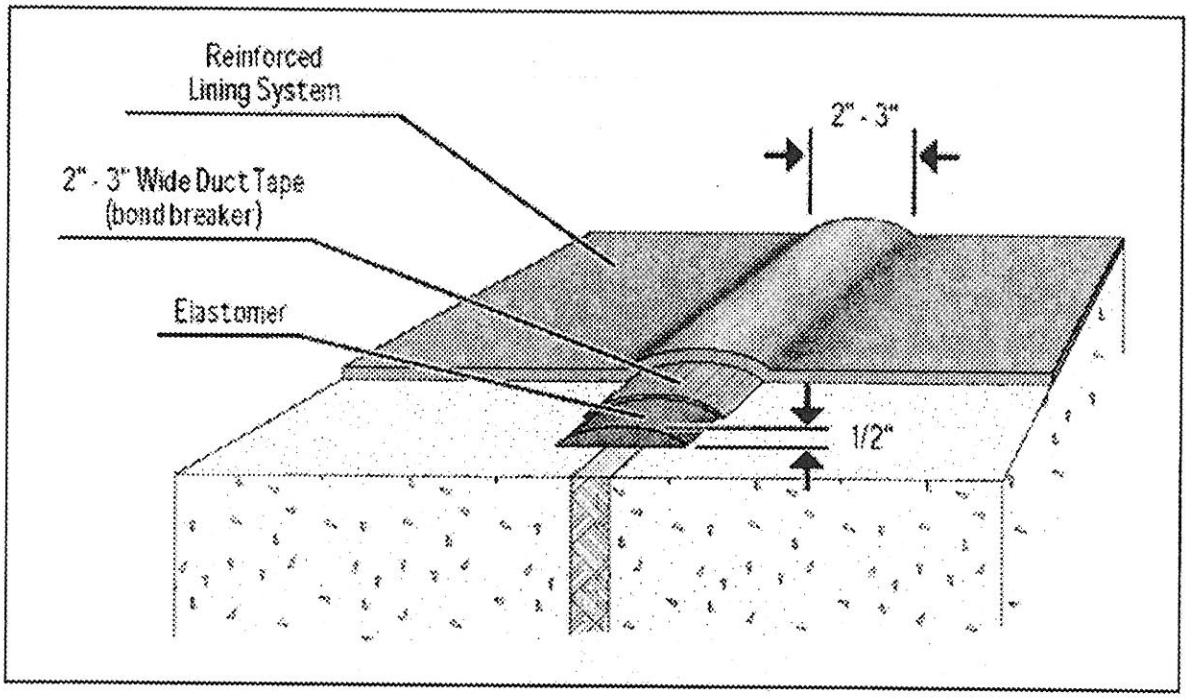


IMPORTANT: Refer to SEMSTONE® product data sheet, application guidelines and Material Safety Data Sheets for specific information about surface preparation, mixing, application and material safety for individual SEMSTONE® products.

1. Prepare bonding surfaces in accordance with instructions found in SEMSTONE® Flexible Coating product data sheet and application guidelines.
2. Mix SEMSTONE® Flexible Coating into a putty using Part C.
3. Apply SEMSTONE® Flexible Coating putty in a 2-3" wide strip centered over the joint. The SEMSTONE® Flexible Coating strip should be approximately 1/2" high in the center and have tapered edges. Allow to cure until firm.
4. Cover SEMSTONE® Flexible Coating with duct tape.
5. Follow instructions for intercoat surface preparation found in the SEMSTONE® Flexible Coating product data sheet. Install SEMSTONE® reinforced coating system as specified.

NOTE: Use masking tape to keep boundary tape lines neat and straight. This is only for aesthetics. Remove tape while coating is still wet.

If chemical environment is such that SEMSTONE® Flexible Coating is not sufficient, contact Carboline for alternate recommendations.

# Treatment for Sumps and Trenches

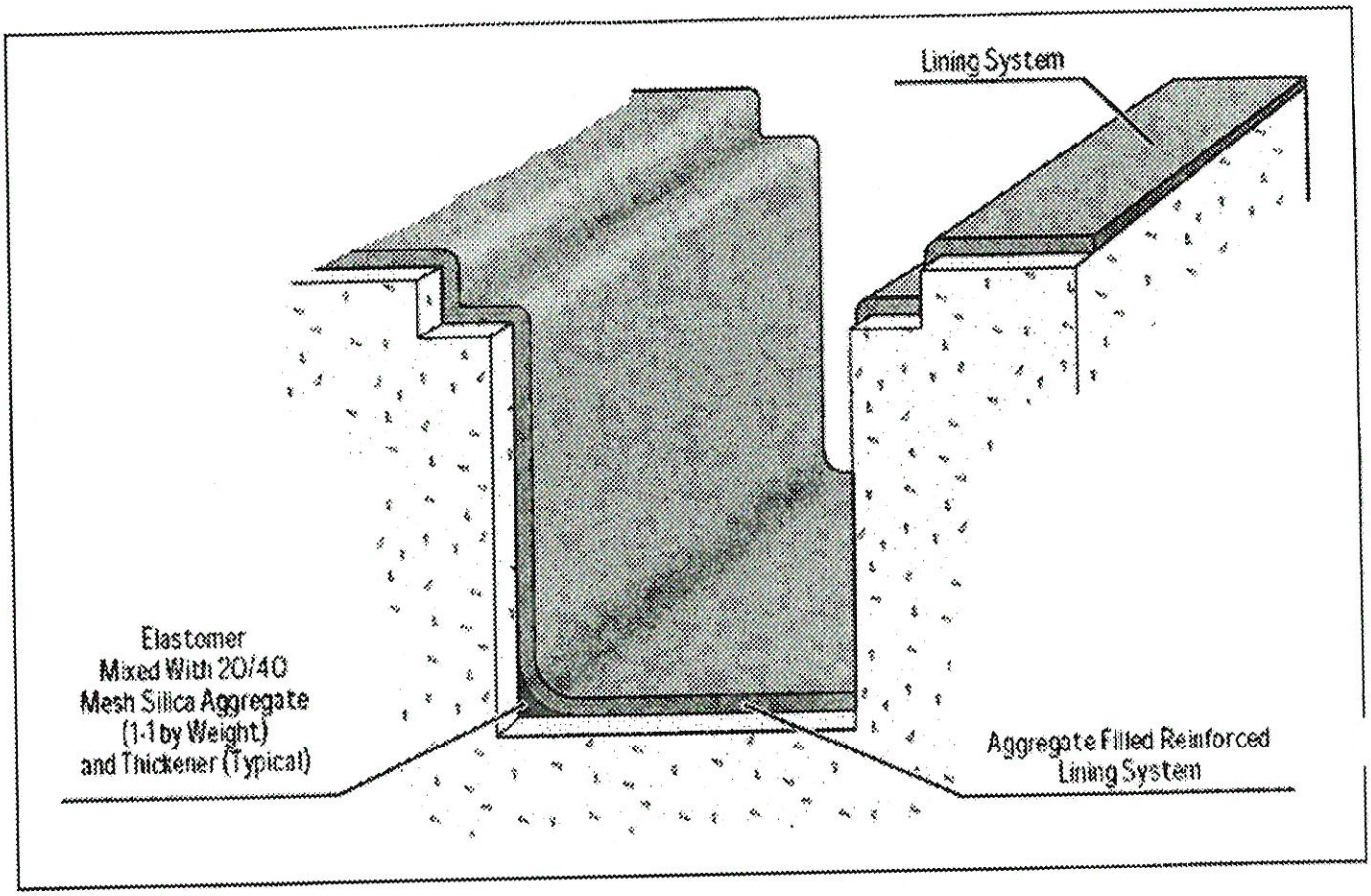


IMPORTANT: Refer to SEMSTONE® product data sheet, application guidelines and Material Safety Data Sheets for specific information about surface preparation, mixing, application and material safety for individual SEMSTONE® products.

1. Prepare bonding surfaces in accordance with instructions found in SEMSTONE® Flexible Coating product data sheet and application guideline.
2. Mix and apply recommended SEMSTONE® Primer as required by product selection. Allow to dry tack free.
3. Install 1" radius of putty to inside corners.
4. Apply a 64 mil base coat of aggregate filled SEMSTONE® coating to trench/sump floor and walls. Immediately embed a layer of Scrim Cloth into the base coat. Use rollers to embed the Scrim Cloth, and flat trowels to smooth the aggregate filled coating over the Scrim Cloth.
5. Apply a 64 mil top coat of SEMSTONE® aggregate filled coating by trowel. Remove trowel marks and close surface using a stiff bristled brush dipped in appropriate SEMSTONE® smoothing liquid.

# Joint Pouring Treatment

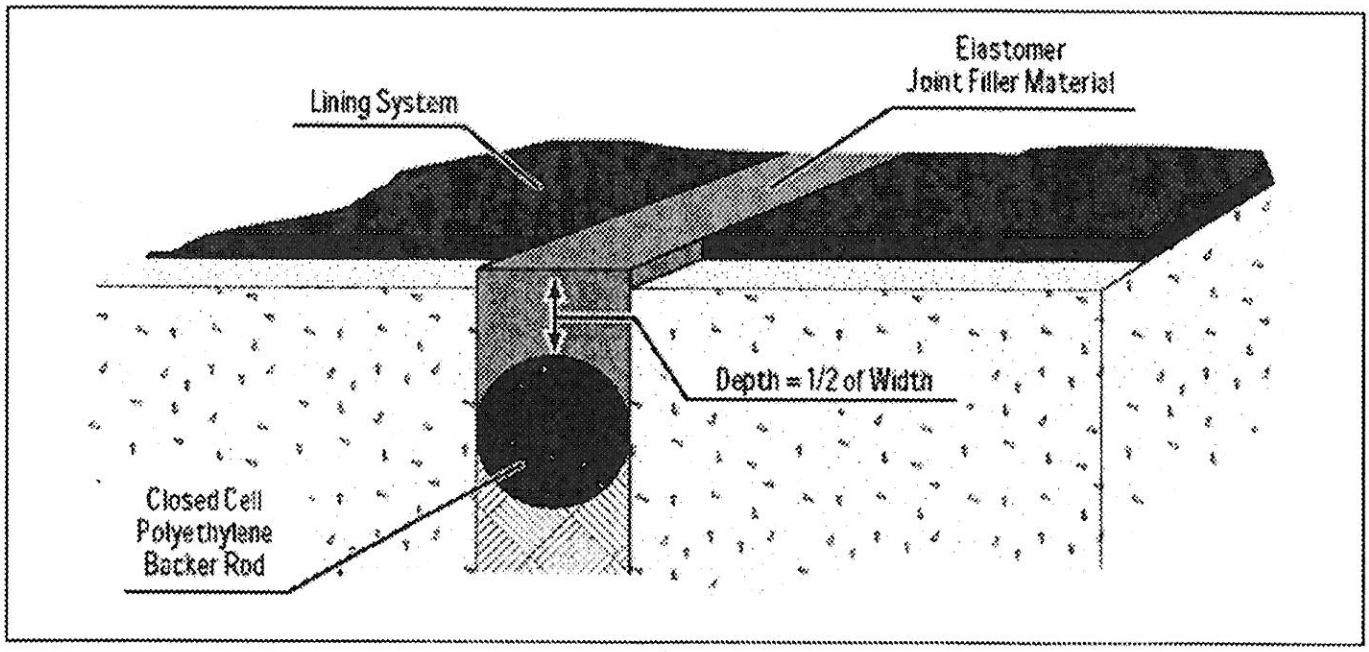


IMPORTANT: Refer to SEMSTONE® product data sheet, application guidelines and Material Safety Data Sheets for specific information about surface preparation, mixing, application and material safety for individual SEMSTONE® products.

Preparation:

Round off sharp edge of joint using a grinder.

1. Prepare bonding surfaces in accordance with instructions found in the specified Carboline joint filler material product data sheet and application guidelines.
2. Insert a closed cell polyethylene backer rod into the joint. The size of the backer rod should be 1.25-to-1.5 times the width of the joint. The backer rod should be placed at a consistent depth of 1/2 the width of the joint.
3. Apply specified Carboline primer to area inside boundary tape. Allow to dry tack free.
4. Pour specified Carboline joint filler material into joint. The finished surface of the joint filler material should be even with the adjacent floor surface.

NOTE: Use masking tape to keep boundary tape lines neat and straight. This is only for aesthetics. Remove tape while coating is still wet.

Consult Carboline for selection of joint filler material for chemical environment and exposure.

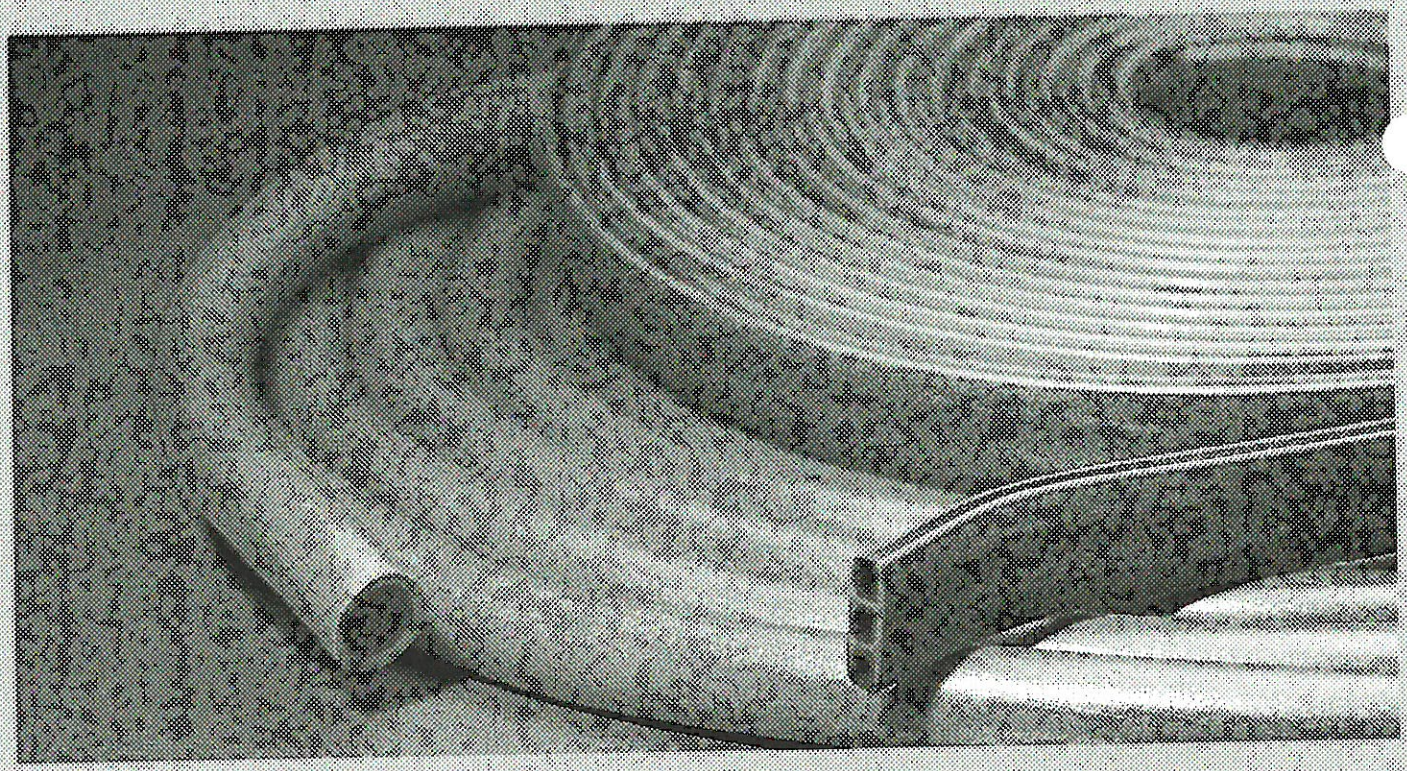

# WATERSTOPS FOR JOINTS IN CONCRETE

## Sika® Hydrotite®

HYDROPHILIC WATERSTOP

BUILDING TRUST

# Sika® Hydrotite®

## The Benchmark for Expandable Waterstops

SIKA HYDROTITE IS A STATE-OF-THE-ART HYDROPHILIC WATERSTOP with unmatched durability and watersealing capacity. Comprised of NON-BENTONITE, modified chloroprene rubber, Sika Hydrotite expands up to EIGHT TIMES its original volume when exposed to water. This expansion creates an effective compression seal within joints of limited movement. Recognized worldwide, Sika Hydrotite has a proven track record as a high quality and cost effective solution to your water containment needs.

**EXCEPTIONAL QUALITIES TO ENSURE UNPARALLELED PERFORMANCE:**

- Comprised of NON-BENTONITE, modified chloroprene rubber
- Outstanding physical properties
- Available as a co-extruded profile to provide directional expansion (also available as a single extrusion)
- Special expansion delay coating to allow concrete cure prior to expansion
- Reliable and durable (lifespan up to 100 years)
- CJ-0725-3K-ADH and CJ-1020-2K-ADH offered with an adhesive back
- Simple, low cost installation
- Available in a multitude of sizes and shapes for numerous applications
- Appropriate for retro-fit as well as new construction
- Can withstand high hydrostatic pressures (150' head for most profiles)
- International acceptance

**TYPICAL STRUCTURES UTILIZING HYDROTITE:**

- Water and waste water treatment facilities
- Primary structures
- Tunnels and culverts
- Dams, locks, canals, water reservoirs and aqueducts
- Pipe penetrations
- Swimming pools
- Storage tanks
- Retaining walls
- Foundations
- Slabs on grade

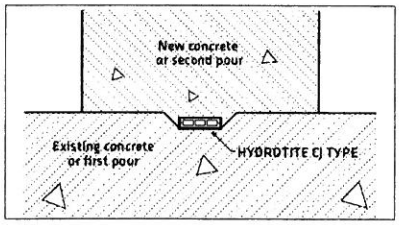


### Hydrotite CJ: A SUPERIOR WATERSTOP FOR CONCRETE JOINT GAPS

As this innovative product absorbs water and expands, it conforms to gap variations along the joint. This action ensures complete sealing even under extraordinary hydrostatic pressures. Due to its slim profile, it won't project like conventional waterstops and trap air or become displaced by the second pour. The result is optimum concrete placement. Hydrotite CJ, is treated with a special expansion-delay coating to prevent it from reacting to the fresh, moist concrete and expanding before curing takes place.

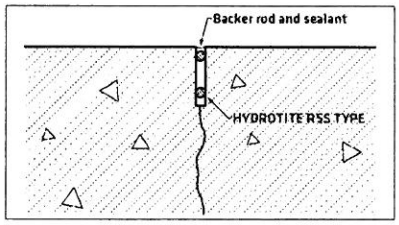


### Hydrotite RSS: SEAL FOR SAWED CONTROL JOINTS/JOINT REPAIRS

Hydrotite RSS profiles create effective seals in sawed control joints and in the repair of failed joints. Hydrotite eliminates hydrostatic pressure below the sealant, thus extending the sealant's life. Select solid profiles with slightly larger diameters than the joint width for joints of consistent widths. Hollow profiles should be selected based on the maximum width of joints with varying widths. Compress both profiles slightly on initial insertion.

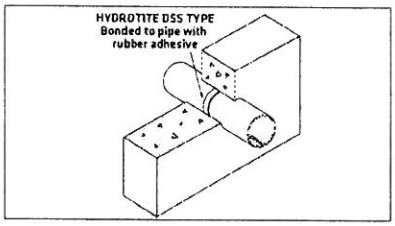


### Hydrotite DSS: PIPE PENETRATIONS/ PIPE THIMBLES

The DSS, DS, SS, RS, and CJ profiles can be bonded to various piping materials, including concrete, steel and plastic. Bond Hydrotite DSS to the pipe prior to concrete placement. Installation in existing walls requires an oversize cutout be made and Hydrotite installed both on the pipe and the outside diameter of the cutout. Fill the annulus with a non-shrink grout. Embedded pipe thimbles can also be sealed with Hydrotite DSS.

# PRODUCT SELECTION

| PROPERTIES OF HYDROTITE | | | | | | |
|---|---|---|---|---|---|---|
| Property | Test Method | Unit | Hyrdrophilic Rubber | | Chloroprene Rubber | |
| | | | Minimum | Typical | Minimum | Typical |
| Tensile Strength | ASTM D412 | lb/in² | 350 | 366 | 1300 | 1570 |
| Elongation | ASTM D412 | % | 600 | 670 | 400 | 450 |
| Hardness | ASTM D2240 | Shore A | 52+/-5 | 54 | 50+/-5 | 50 |
| Tear Resistance | ASTM D624 | lb/in | 50 | 60.3 | 100 | 123 |
| Specific Gravity | ASTM D792 | | 1.32+/-0.1 | 1.32 | 1.38+/-0.1 | 1.38 |

### SWELLING CHARACTERISTICS

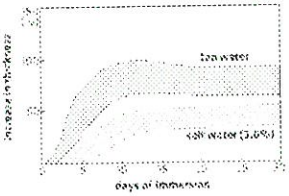


Swelling characteristics of Hydrotite depend on the water quality as typical examples shown below.

### EXPANSION CHARACTERISTICS

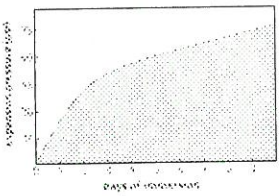


Typical expansion pressures of Hydrotite are shown below.

SHAPE AND APPLICATION

| ITEM | NOMINAL SIZE mm (inches) | PACKAGING UNIT METERS/REEL x REELS (FT/BOX) |
|---|---|---|

FOR CONSTRUCTION JOINTS

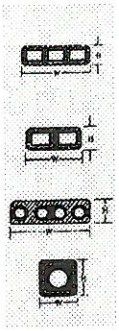

| | H | W | |
|---|---|---|---|
| CJ-0725-3K<br>CJ-0725-3K-ADH | 7 (.28) | 25 (.98) | 10 m x 4 (131) |
| | Same as above with pressure sensitive adhesive backing | | |
| CJ-1020-2K<br>CJ-1020-2K-ADH | 10 (.39) | 20 (.79) | 10 m x 5 (164) |
| | Same as above with pressure sensitive adhesive backing | | |
| CJ-1030-4M | 10 (.39) | 30 (1.18) | 10 m x 4 (131) |
| CJ-3030-M | 30 (1.18) | 30 (1.18) | 10 m x 1 (33) |

| ITEM | NOMINAL SIZE mm (inches) | PACKAGING UNIT METERS/REEL x REELS (FT/BOX) |
|---|---|---|

FOR PIPE PENETRATIONS, CONCRETE CURBS, TUNNEL LINING SEGMENTS

| | H | W | | h |
|---|---|---|---|---|
| SS-0215 | 2 (.08) | 15 (.59) | - | 25 m x 4 (328) |
| SS-0220 | 2 (.08) | 20 (.79) | - | 25 m x 4 (328) |
| SS-0320 | 3 (.12) | 20 (.79) | - | 25 m x 4 (328) |
| RS-0520-3.5I | 5 (.20) | 20 (.79) | 3.5 (.14) | 20 m x 5 (328) |
| RS-0723-3.5I | 7 (.28) | 23 (.91) | 3.5 (.14) | 15 m x 4 (196) |
| DS-0420-2.5I | 4 (.16) | 20 (.79) | 2.5 (.10) | 20 m x 5 (328) |
| DS-0520-3.5I | 5 (.20) | 20 (.79) | 3.5 (.14) | 20 m x 5 (328) |
| DS-0615-4.5I | 6 (.24) | 15 (.59) | 4.5 (.18) | 15 m x 5 (245) |
| DSS-0320 | 3 (.12) | 20 (.79) | - | 25 m x 4 (328) |
| DSS-0420 | 4 (.16) | 20 (.79) | - | 25 m x 5 (328) |

| ITEM | NOMINAL SIZE mm (inches) | PACKAGING UNIT METERS/REEL x REELS (FT/BOX) |
|---|---|---|

FOR JOINT REPAIR, CONTROL JOINTS, SPECIAL APPLICATIONS

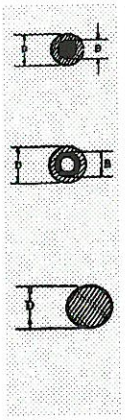

| | D | B | h |
|---|---|---|---|
| RSS-1610 D | 16 (.63) | 10 (.39) | 10 m x 2 (65) |
| RSS-2014 D | 20 (.79) | 14 (.55) | 10 m x 2 (65) |
| RSS-0806 C | 8 (.31) | 6 (.24) | 20 m x 5 (320) |
| RSS-1007 C | 10 (.39) | 7 (.28) | 20 m x 3 (196) |
| RSS-1209 C | 12 (.47) | 9 (.35) | 20 m x 2 (131) |
| RSS-1410 C | 14 (.55) | 10 (.39) | 15 m x 2 (98) |
| RSS-040 P | 4 (.16) | - | 20 m x 10 (656) |
| RSS-050 P | 5 (.20) | - | 20 m x 10 (656) |
| RSS-060 P | 6 (.24) | - | 20 m x 10 (656) |
| RSS-080 P | 8 (.31) | - | 20 m x 5 (320) |
| RSS-120 P | 12 (.47) | - | 20 m x 2 (131) |
| RSS-140 P | 14 (.55) | - | 15 m x 2 (98) |
| RSS-160 P | 16 (.63) | - | 10 m x 2 (65) |

HYDROPHILIC RINGS

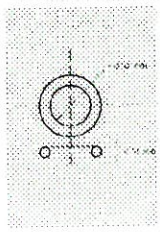

| Profile | Ø "d" | Ø "D" |
|---|---|---|
| CH0611 | 6 | 11 |
| CH0614 | 6 | 14 |
| CH0621 | 6 | 21 |
| CH0624 | 6 | 24 |

Hydrotite rings are available in a range of internal diameters to meet varying needs. Hydrotite hydrophilic rings may be installed wherever a penetration through concrete needs to be sealed. Conduits, pipes, embedded sleeves, concrete wall ties, etc. can all be sealed utilizing Hydrotite rings.

## *CHEMICAL RESISTANCE*

Chloroprene rubber has been tested and found compatible with the following materials:

acetic acid, 30%
aluminium chloride solutions
aluminium sulphate solutions
ammonia, anhydrous
ammonium chloride solutions
ammonium hydroxide solutions
ammonium sulphate solutions
amyl alcohol
barium hydroxide solutions
borax solutions
boric acid solutions
butane
calcium bisulphite solutions
calcium chloride solutions
calcium hydroxide solutions
carbon dioxide
carbon monoxide
castor bean oil
chloroacetic acid
citric acid solutions
copper chloride solutions
copper sulphate solutions
cottonseed oil
ethyl alcohol
ethylene glycol
ferric chloride solutions
fluorosilicic acid
formaldehyde, 40%
freon
fuel oil
glue
glycerine
n-hexane
hydraulic oils
hydrochloric acid, 37%
hydrocyanic acid
hydrofluoric acid, 44%
hydrogen
hydrogen sulphide
isooctane
isopropyl alcohol
lactic acid
linseed oil
magnesium chloride solutions
magnesium hydroxide solutions
mercuric chloride solutions
mercury
methyl alcohol
mineral oil
phosphoric acid, 85%
pieric acid
sodium hydroxide, 50%
soya bean oil
stannous chloride, 15%
sulphur dioxide,liquid
tannic acid, 10%
tartaric acid
triethanolamine
tung oil
zinc chloride solutions

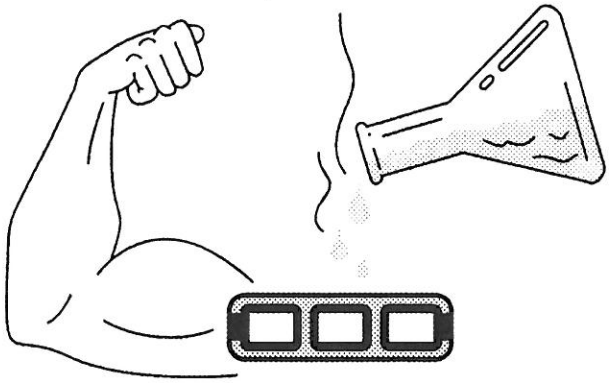

# 9814 System Overview

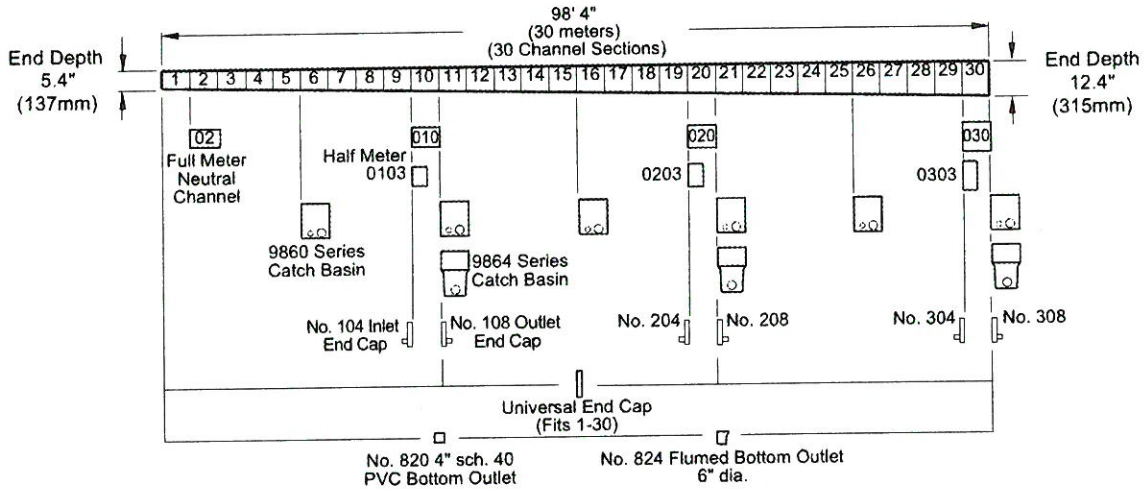


| Capacity and Deep End Depths 9814 System | | | | | |
|---|---|---|---|---|---|
| Channel Number | Deep End Depth in. | mm | Slope | Holding Capacity (gallons) | Weight lbs. |
| 9814-100-1 | 5.6 | 143 | 0.6 | 2.3 | 33.0 |
| 9814-100-02# | 5.6 | 143 | 0.0 | 2.3 | 33.0 |
| 9814-100-2 | 5.8 | 149 | 0.6 | 2.6 | 33.0 |
| 9814-100-3 | 6.0 | 155 | 0.6 | 2.6 | 35.0 |
| 9814-100-4 | 6.3 | 161 | 0.6 | 2.7 | 35.0 |
| 9814-100-5 | 6.5 | 167 | 0.6 | 2.9 | 36.0 |
| 9814-100-6 | 6.7 | 173 | 0.6 | 3.0 | 36.0 |
| 9814-100-7 | 7.0 | 179 | 0.6 | 3.2 | 38.0 |
| 9814-100-8 | 7.2 | 185 | 0.6 | 3.4 | 40.0 |
| 9814-100-9 | 7.4 | 191 | 0.6 | 3.5 | 41.0 |
| 9814-100-010# | 7.4 | 191 | 0.0 | 3.6 | 42.0 |
| 9814-100-0103* | 7.4 | 191 | 0.0 | 1.8 | 22.0 |
| 9814-100-10 | 7.7 | 197 | 0.6 | 3.7 | 43.0 |
| 9814-100-11 | 7.9 | 203 | 0.6 | 3.8 | 44.0 |
| 9814-100-12 | 8.1 | 209 | 0.6 | 4.0 | 44.0 |
| 9814-100-13 | 8.4 | 215 | 0.6 | 4.2 | 45.0 |
| 9814-100-14 | 8.6 | 221 | 0.6 | 4.3 | 46.0 |
| 9814-100-15 | 8.9 | 227 | 0.6 | 4.5 | 47.0 |
| 9814-100-16 | 9.1 | 233 | 0.6 | 4.6 | 48.0 |
| 9814-100-17 | 9.3 | 239 | 0.6 | 4.8 | 49.0 |
| 9814-100-18 | 9.6 | 245 | 0.6 | 4.9 | 50.0 |
| 9814-100-19 | 9.8 | 251 | 0.6 | 5.1 | 51.0 |
| 9814-100-020# | 9.8 | 251 | 0.0 | 5.2 | 52.0 |
| 9814-100-0203* | 9.8 | 251 | 0.0 | 2.6 | 27.0 |
| 9814-100-20 | 10.0 | 257 | 0.6 | 5.3 | 53.0 |
| 9814-100-21 | 10.3 | 263 | 0.6 | 5.4 | 54.0 |
| 9814-100-22 | 10.5 | 269 | 0.6 | 5.6 | 55.0 |
| 9814-100-23 | 10.7 | 275 | 0.6 | 5.7 | 56.0 |
| 9814-100-24 | 11.0 | 281 | 0.6 | 5.9 | 56.0 |
| 9814-100-25 | 11.2 | 287 | 0.6 | 6.1 | 58.0 |
| 9814-100-26 | 11.5 | 293 | 0.6 | 6.2 | 58.0 |
| 9814-100-27 | 11.7 | 299 | 0.6 | 6.4 | 59.0 |
| 9814-100-28 | 11.9 | 305 | 0.6 | 6.5 | 59.0 |
| 9814-100-29 | 12.2 | 311 | 0.6 | 6.7 | 59.0 |
| 9814-100-030# | 12.2 | 311 | 0.0 | 6.8 | 59.0 |
| 9814-100-0303* | 12.2 | 311 | 0.0 | 3.4 | 32.0 |
| 9814-100-30 | 12.5 | 317 | 0.6 | 6.9 | 60.0 |

# Neutral Full Meter Channel
* Neutral Half Meter Channel

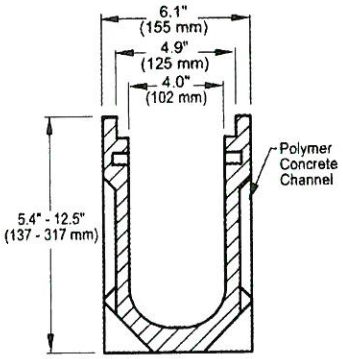


**CROSS SECTION DETAIL**

Note: This trench drainage system is designed for "on-grade" applications only, as there are no provisions for a flashing flange or flashing clamp.

## 9860 and 9868 Catch Basin

The 9860 and 9868 Series Catch Basins are designed for the 9814 and 9818 Channel Systems and accommodate any style 9870 series grate. Trash buckets in molded poly-propylene are available for easy collection and removal of debris. Knockout panels are provided on either end of the catch basin for connection with channels.

## 9868 Catch Basin

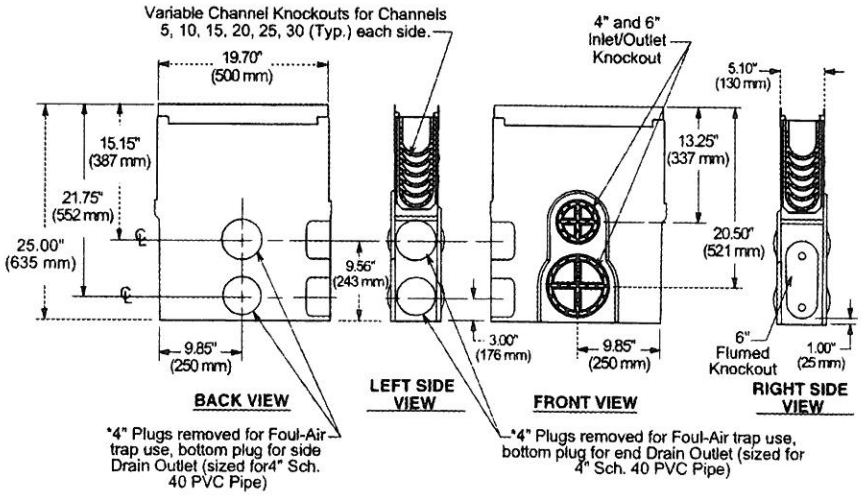


## 9864 Modular Catch Basins

The 9864 modular catch basins with extensions are available for the 9814 and 9818 systems. These stackable, modular units have center sections to extend the catch basin to meet depth requirements. Furnished with ductile iron slotted grate or ductile iron ADA compliant grate.

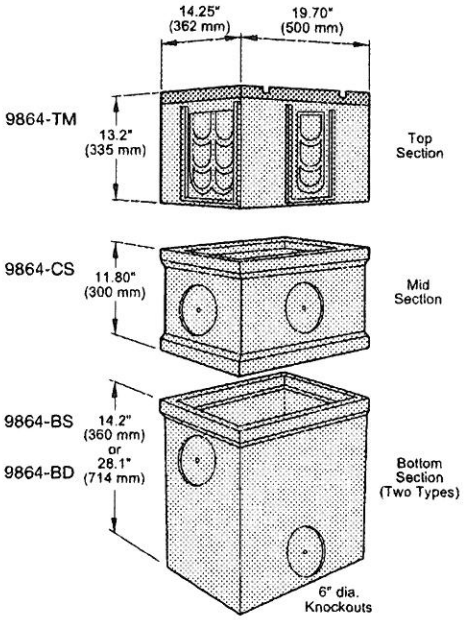


## 9812 Catch Basins

The 9812 Series Catch Basins are (9812-660-CB12) 1'-9" x 2' x 2'-3" deep and (9812-880-CB24) 2' x 2'-3" x 2'-4" deep units. It can be used in conjunction with either Fiberglass Trench System, 9810 or 9812. Knockouts to accept trench inlets or plumbing connections are easily fabricated on the job site. All units come standard with a secured, slotted ductile iron grate and coated steel frame, as well as installation brackets.

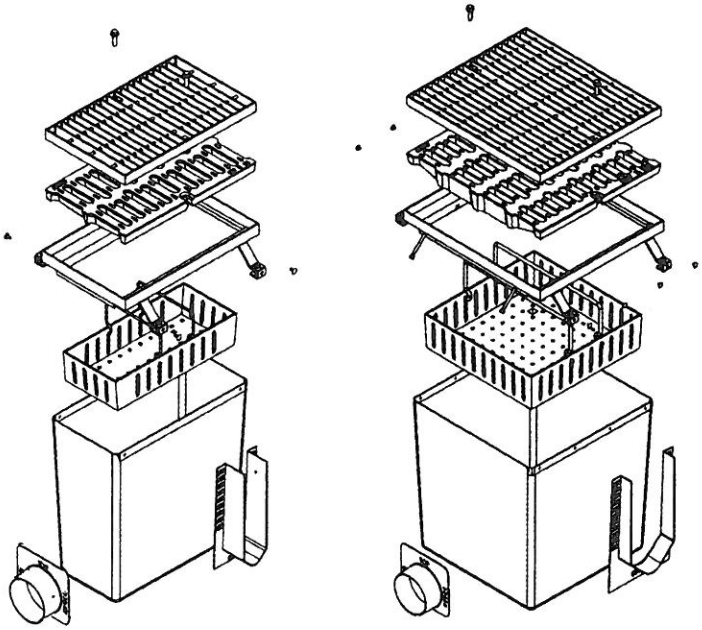

**9812-660-CB12** **9812-880-CB24**

# Smith Drainage Systems Chemical Resistance Guide

| Chemical Medium | Max conc. | Short time exposure 72 hours Polyester | Long time exposure 42 days | Max. conc. | Short time exposure 72 hours Vinyl ester | Long time exposure 42 days |
|---|---|---|---|---|---|---|
| **Acetic Acid** | **30%** | ✔ | × | **75%** | ✔ | ✔ |
| Acetone | 10% | ✔ | × | 10% | ✔ | × |
| **Ammonia** | **10%** | ✔ | × | **10%** | ✔ | × |
| Aniline | 100% | ✔ | × | 100% | ✔ | × |
| **Aniline in Ethyl Alcohol** | **10%** | ✔ | ✔ | **10%** | ✔ | ✔ |
| Benzene | 100% | ✔ | × | 100% | ✔ | × |
| **Boric Acid** | **100%** | ✔ | ✔ | **100%** | ✔ | ✔ |
| Butyric Acid | 25% | ✔ | ✔ | 50% | ✔ | ✔ |
| **Butyl Alcohol** | **100%** | ✔ | ✔ | **100%** | ✔ | ✔ |
| Calcium Chloride | 100% | ✔ | ✔ | 100% | ✔ | ✔ |
| **Calcium Hydroxide** | **100%** | ✔ | × | **100%** | ✔ | ✔ |
| Caster Oil | 100% | ✔ | ✔ | 100% | ✔ | ✔ |
| **Chloric Acid** | **5%** | ✔ | × | **5%** | ✔ | ✔ |
| Chromic Acid | 5% | ✔ | ✔ | 20% | ✔ | ✔ |
| **Citric Acid** | **100%** | ✔ | ✔ | **100%** | ✔ | ✔ |
| Diesel Fuel | 100% | ✔ | ✔ | 100% | ✔ | ✔ |
| **Ethanol** | **100%** | ✔ | × | **95%** | ✔ | ✔ |
| Ethlendiamine | 100% | ✔ | ✔ | 100% | ✔ | ✔ |
| **Ethyl Acetate** | **100%** | ✔ | × | **100%** | ✔ | × |
| Ferrous Sulfate | 30% | ✔ | ✔ | 100% | ✔ | ✔ |
| **Fluoralific Acid** | **10%** | ✔ | ✔ | **10%** | ✔ | ✔ |
| Formaldehyde | 35% | ✔ | ✔ | 100% | ✔ | ✔ |
| **Formic Acid** | **10%** | ✔ | × | **10%** | ✔ | ✔ |
| Fuel Oil | 100% | ✔ | ✔ | 100% | ✔ | ✔ |
| **Gasoline** | **100%** | ✔ | ✔ | **100%** | ✔ | ✔ |
| n-Heptane | 100% | ✔ | ✔ | 100% | ✔ | ✔ |
| **n-Hexane** | **100%** | ✔ | ✔ | **100%** | ✔ | ✔ |
| Hydraulic Oil | 100% | ✔ | ✔ | 100% | ✔ | ✔ |
| **Hydrochloric Acid** | **10%** | ✔ | ✔ | **37%** | ✔ | ✔ |
| Hydrofluoric Acid | 5% | ✔ | × | 20% | ✔ | ✔ |
| **JP4** | **100%** | ✔ | ✔ | **100%** | ✔ | ✔ |
| JP8 | 100% | ✔ | ✔ | 100% | ✔ | ✔ |
| **Lactic Acid** | **10%** | ✔ | ✔ | **100%** | ✔ | × |
| Methanol | 5% | × | × | 5% | ✔ | × |
| **Methyl Amine** | **100%** | ✔ | × | **100%** | ✔ | × |
| Methyl Ethyl Ketone | 100% | ✔ | × | 100% | ✔ | × |
| **Mineral Oil SAE5W50** | **100%** | ✔ | ✔ | **100%** | ✔ | ✔ |
| Monochlor Benzene | 0.05% | × | × | 0.05% | ✔ | ✔ |
| **Monochloroacetic Acid** | **10%** | ✔ | ✔ | **10%** | ✔ | ✔ |
| Nitric Acid | 10% | ✔ | × | 20% | ✔ | ✔ |
| **n-Nonane** | **100%** | ✔ | ✔ | **100%** | ✔ | ✔ |
| Iso-Octane | 100% | ✔ | × | 100% | ✔ | × |
| **Oxalic Acid** | **100%** | ✔ | ✔ | **100%** | ✔ | ✔ |
| Phenol | 100% | ✔ | × | 100% | ✔ | × |
| **Phosphoric Acid** | **10%** | ✔ | ✔ | **75%** | ✔ | ✔ |
| Potassium Hydroxide | 10% | × | × | 10% | ✔ | ✔ |
| **Sodium Acetate** | **100%** | ✔ | × | **100%** | ✔ | ✔ |
| Sodium Carbonate | 20% | ✔ | ✔ | 35% | ✔ | ✔ |
| **Sodium Chloride** | **100%** | ✔ | ✔ | **100%** | ✔ | ✔ |
| Sodium Hydroxide | 15% | ✔ | × | 25% | ✔ | ✔ |
| **Sodium Hypochloric** | **5%** | ✔ | ✔ | **5%** | ✔ | ✔ |
| Sulfuric Acid | 40% | ✔ | ✔ | 70% | ✔ | ✔ |
| **Tetrafluoroborsaure** | **20%** | ✔ | × | **20%** | ✔ | ✔ |
| Toluene | 100% | ✔ | × | 100% | ✔ | × |
| **Trichloroethylene** | **100%** | × | × | **100%** | × | × |
| Triethylamine | 100% | ✔ | ✔ | 100% | ✔ | ✔ |
| **Xylene** | **100%** | ✔ | × | **100%** | ✔ | × |

**Note:** Maximum operating temperature of 180°F (82°C)

Smith/ACO Drain channel bodies are highly resistant to chemical attack and, with the appropriate grate, can be used in most environments where acids and dilute alkalis are encountered.

Refer to chemical chart left for resistance of Polyester and Vinyl ester polymer concrete. Fiberglass products use the same polyester resin - refer to Polyester details for chemical resistance.

When greater chemical resistance is required, Vinylester polymer concrete channels should be specified.

These recommendations are for guidance only. Customers are advised to test a coupon of polymer concrete to ensure suitability. Test coupons are available free of charge from Smith/ACO.

Polymer concrete is not affected by road de-icing salts, and conforms to ASTM - B117 Salt Spray Test.

## Important considerations for chemical environments

When reviewing potential applications of trench drains in chemical environments, the following issues should be considered:

1. Type(s) & mixture of chemical(s).
2. Concentration percentages.
3. Contact time with trench system.
4. Temperatures of chemicals flowing into the trench drain (180°F, 82°C max).
5. Flushing system employed to clear chemicals from the system.
6. Cleaning agents should be checked for compatibility with trench material.
7. Test coupons can be used for final determination of chemical resistance.
8. Grate, locking mechanism, edge rail, outlet and trash bucket materials should be checked for chemical resistance.
9. Check sealant for compatibility

# APPENDIX D-5

# CONTAINMENT VOLUME CALCULATIONS

| | | | | |
|---|---|---|---|---|
| **INCOMING CONTAINER STORAGE (AREA 13)** | | | | |
| **CONTAINMENT CALCULATIONS** | | Prepared By: | SA | |
| | | Checked: | APP | 1/3/2017 |
| *Step 1 -- Determine Required Containment Volume:* | | | | |
| | | | | Reference Drawing: S-106 |
| | Acid | Caustic | | NOTES: |
| No. of Totes | 42.0 | 39.0 | | |
| Volume of each tote, gal | 275.0 | 275.0 | | |
| Total volume, gal | 11,550.0 | 10,725.0 | | |
| 10% of total volume, gal | 1,155.0 | 1,072.5 | | |
| 10% of total volume, cf | 154.4 | 143.4 | | |
| Required containment volume, $ft^3$ | 154 | 143 | | |
| *Step 2 -- Determine Available Containment Capacity:* | | | | |
| | Acid | Caustic | | |
| Overall length, ft | 29.0 | 29.0 | | |
| Overall width, ft | 21.2 | 21.2 | | |
| Container shelf width (two), ft | 10.0 | 10.0 | | |
| Overall width, excluding shelves, ft | 11.2 | 11.2 | | |
| Ramp length, ft | 2.1 | 2.1 | | |
| Ramp width, ft | 5.5 | 5.5 | | |
| Gross area, $ft^2$ | 313.6 | 313.6 | | Gross area = (overall length x overall width, excluding shelves) - (ramp width x ramp length) |
| Curb height, ft | 0.5 | 0.5 | | |
| Curbed area height, ft | 0.3 | 0.3 | | |
| Sloped area height, ft | 0.5 | 0.5 | | |
| Average slope height, ft | 0.25 | 0.25 | | |
| Volume of 4" curbed area, $ft^3$ | 105 | 105 | | Volume of 4" curbed area = (curbed area height) x (gross area) |
| Volume of sloped curbed area, $ft^3$ | 78 | 78 | | Volume of slope curbed area = (average slope height) x (gross area) |
| Containment volume available (minumum), $ft^3$ | 183 | 183 | | |
| *Step 3 -- Determine if Containment Volume is Adequate:* | | | | |
| | Acid | Caustic | | |
| Required containment volume, $ft^3$ | 154 | 143 | | |
| Containment volume available (minumum), $ft^3$ | 183 | 183 | | |
| Containment volume adequate? | Yes | Yes | | |

| | | | | |
|---|---|---|---|---|
| **WAREHOUSE (SOLIDS STORAGE) (AREA 8)** | | | | |
| **CONTAINMENT CALCULATIONS** | Prepared By: | SA | | |
| | Checked: | APP | 1/3/2017 | |
| *Step 1 -- Determine Required Containment Volume:* | | | | |
| | | | Reference Drawing: S-109 | |
| | | | NOTES: | |
| Expected storage of salts and sludge, tons | 500 | | | |
| Unit weight of salts, lb/ft$^3$ | 72 to 80 | | | |
| Unit weight of sludge, lb/ft$^3$ | 100+ | | | |
| Total volume (ft$^3$) of salts and sludge, using most conservative unit weight of 72 lb/ft$^3$ | 13,889 | | Total volume = (Expected storage x 2000 lb/ton) / unit weight | |
| 10% of total volume | 1,389 | | | |
| Required containment volume, ft$^3$ | 1,389 | | | |
| *Step 2 -- Determine Available Containment Capacity:* | | | | |
| Overall length, ft | 98 | | Clear dimension inside curb | |
| Overall width, ft | 73 | | Clear dimension inside curb | |
| Curbed perimeter width, ft | 1 | | | |
| Actual length, excluding perimeter, ft | 98 | | | 2160 |
| Actual width, excluding perimeter, ft | 73 | | | |
| Gross area, ft$^2$ | 7,154 | | Gross area = (clear length x clear width) | |
| Deducts for entrance ramp and containers, ft$^2$ | 2,200 | | Ramp 40 sf + 540 lf containers 4 feet wide (total deduct 2200 sf) | |
| Height of curbed perimeter, ft | 0.75 | | | |
| Containment volume available (minumum), ft$^3$ | 3,716 | | Containment volume available = 90% of gross area x height of curbed perimeter | |
| *Step 3 -- Determine if Containment Volume is Adequate:* | | | | |
| Required containment volume, ft$^3$ | 1,389 | | | |
| Containment volume available (minumum), ft$^3$ | 3,716 | | | |
| Containment volume adequate? | Yes | | | |
| Notes: | | | | |
| 1. Containment volume is conservatively calculated using lowest unit weight | | | | |

| | | | |
|---|---|---|---|
| **GENERAL WASTE (AREA 7)** | | | |
| **CONTAINMENT CALCULATIONS** | Prepared By: | SA | |
| | Checked: | APP | 1/3/2017 |
| | | | |
| *Step 1 -- Determine Required Containment Volume:* | | | Reference Drawing: S-103 |
| | | | |
| Tanks: | | Number* | NOTES: |
| Nominal size, gal | 135,784 | 11 | *Calculations include the future tank, for a total of 11 tanks |
| Nominal size, $ft^3$ | 18,153 | | |
| Overall length of Section 1, ft | 80.84 | | |
| Overall width of Section 1, ft | 84.330 | | |
| Total area of Section 1, $ft^2$ | 6,817 | | |
| Overall length of Section 2, ft | 54.5 | | |
| Overall width of Section 2, ft | 26.0 | | |
| Area of two deducted corners, $ft^2$ | 72.3 | | Area of two deducted corners = 8.5^2 |
| Total area of Section 2, $ft^2$ | 1,345 | | |
| Gross area of containment, $ft^2$ | 8,162 | | |
| Gross area of containment + total surrounding wall areas, $ft^2$ | 8,538 | | *Surrounding wall areas are considered for the calculation of the required rainfall event volume. This assumes that precipitation that falls on the containment walls flows into the containment area. For adjacent containment areas that share walls, it is assumed that half of the precipitation flows into each adjacent containment area.* |
| 25-year rainfall depth, in | 6.25 | | |
| 25-year rainfall event voume, $ft^3$ | 4,447 | | 25-year rainfall event volume = (Gross area of containment + total surrounding wall areas) * (rainfall depth/12) |
| Required containment volume, $ft^3$ | 22,600 | | Required containment = Largest tank volume + 25-year rainfall |
| | | | |
| *Step 2 -- Determine Available Containment Capacity:* | | | *Storage volumes for sloped area are calculated for Section 1 and Section 2 of Area 7 separately, because the layouts are different. There are 9 tanks in the Section 1 including the future tank, and two tanks in Section 2.* |
| Storage volumes | | | |
| Pad diameter, ft | 23.00 | | |
| Tank pad areas (Section 1), $ft^2$ | 3,942 | | Tank pad area = number of tanks x (octagonal pad diameter)$^2$ x 0.828 *(0.828 constant derived from formula for area of an octagon)* |

| | | | |
|---|---|---|---|
| Gross area minus pad areas (Section 1), $ft^2$ | 2,875 | | |
| Tank pad areas (Section 2), $ft^2$ | 876 | | |
| Gross area minus pad areas (Section 2), $ft^2$ | 469 | | |
| **Total** gross area minus pad areas, $ft^2$ | 3,344 | | **Total** gross area minus pad areas = 2,875 + 469 = 3,344 |
| Storage volume -- sloped area (Section 1): | | | |
| Average depth, in | 4.5 | | |
| **Volume, $ft^3$** | **1,078** | | Sloped area volume (Section 1) = (average depth/12) x gross area minus pad areas |
| Storage volume -- sloped area (Section 2): | | | |
| Overall depth, in | 9.0 | | |
| **Volume, $ft^3$** | **117** | | Sloped area volume (Section 2) = (overall depth/12) x gross area minus pad areas / 3 *(formula derived from volume of a pyramid)* |
| Storage volume -- below pads: | | | |
| Height of pads, in | 10.0 | | |
| **Volume, $ft^3$** | **2,786.55** | | Volume below tank pads = (height of pads/12) x **Total** gross area minus pad areas |
| Storage volume -- above pads: | | | |
| Tank diameter, ft | 21 | | |
| Total tank areas, not including pad area, $ft^2$ | 3,808 | | Total tank area = (number of tanks x diameter$^2$ x 3.14)/4 |
| Gross area minus **tank** areas, $ft^2$ | 4,354 | | Gross area minus **tank** areas = 8,162 - 3,808 = 4,354 |
| Containment area height above pads, ft | 6.2 | | |
| **Volume, $ft^3$** | **26,820** | | Volume above tank pads = gross area minus tank areas x containment area height above pads |
| **Containment volume available, $ft^3$** | **30,802** | | |
| *Step 3 -- Determine if Containment Volume is Adequate:* | | | |
| Required containment volume, $ft^3$ | 22,600 | | |
| Containment volume available (minumum), $ft^3$ | 30,802 | | |
| Containment volume adequate? | Yes | | |

| | | | |
|---|---|---|---|
| **INCOMING ACID TANK STORAGE (PORTION OF AREA 6)** | | | |
| **CONTAINMENT CALCULATIONS** | Prepared By: | SA | |
| | Checked: | APP | 1/3/2017 |
| *Step 1 -- Determine Required Containment Volume:* | | | |
| | | | Reference Drawing: S-104 |
| Tanks: | Nominal Size (gal) | Number | NOTES: |
| | 26,539 | 4 | |
| | 13,112 | 6 | |
| Total volume (nominal), gal | 184,828 | | |
| Largest tank (nominal), gal | 26,539 | | |
| Largest tank (nominal), $ft^3$ | 3,548 | | |
| Overall length of containment area, ft | 89.00 | | |
| Overall width of containment area, ft | 43.50 | | |
| Gross area of containment, $ft^2$ | 3,872 | | |
| Gross area of containment + total surrounding wall areas, $ft^2$ | 4,073 | | *Surrounding wall areas are considered for the calculation of the required rainfall event volume. This assumes that precipitation that falls on the containment walls flows into the containment area. For adjacent containment areas that share walls, it is assumed that half of the precipitation flows into each adjacent containment area.* |
| 25-year rainfall depth, in | 6.25 | | |
| 25-year rainfall event voume, $ft^3$ | 2,121 | | 25-year rainfall event volume = (Gross area of containment + total surrounding wall areas) * (rainfall depth/12) |
| Required containment volume, $ft^3$ | 5,669 | | Required containment volume = Largest tank volume + 25-year rainfall |
| | | | |
| *Step 2 -- Determine Available Containment Capacity:* | | | |
| | | | |
| Tank pads | Diameter (ft) | Number | |
| | 15.12 | 4 | |
| | 13.50 | 6 | |
| Total tank pad areas, $ft^2$ | 1,663 | | Total tank pad area = number of tanks x (octagonal pad diameter)$^2$ x 0.828 *(0.828 constant derived from formula for area of an octagon)* |
| Net area minus pad areas, $ft^2$ | 2,209 | | |

| | | | |
|---|---|---|---|
| Storage volume -- sloped area: | | | |
| Average depth, in | 4.5 | | |
| **Volume, $ft^3$** | **828** | | Sloped area volume = (average depth/12) x gross area minus pad areas |
| Storage volume -- below pads: | | | |
| Height of pads, in | 6.0 | | |
| **Volume, $ft^3$** | **1,104** | | Volume below tank pads = (height of pads/12) x gross area minus pad areas |
| Storage volume -- above pads: | | | |
| Tank diameter, ft | 13.1 | | |
| Tank diameter, ft | 11.5 | | |
| Total tank areas, not including pad area, $ft^2$ | 1,162 | | Total tank area = (number of tanks x diameter$^2$ x 3.14)/4 |
| Net area, minus **tank** areas, $ft^2$ | 2,710 | | Gross area minus **tank** areas = 3,860 - 1,162 = 2,699 |
| Containment area height above pads, ft | 4.5 | | |
| **Volume, $ft^3$** | **12,194** | | Volume above tank pads = gross area minus tank areas x containment area height above pads |
| **Containment volume available, $ft^3$** | **14,127** | | |
| | | | |
| *Step 3 -- Determine if Containment Volume is Adequate:* | | | |
| | | | |
| | Acid | | |
| Required containment volume, $ft^3$ | 5,669 | | |
| Containment volume available (minumum), $ft^3$ | 14,127 | | |
| Containment volume adequate? | Yes | | |
| | | | |
| | | | |
| | | | |
| | | | |

| | | | |
|---|---|---|---|
| **CAUSTIC WASTE TANK STORAGE (AREA 6)** | | | |
| **CONTAINMENT CALCULATIONS** | Prepared By: | SA | |
| | Checked: | APP | 1/3/2017 |
| | | | |
| *Step 1 -- Determine Required Containment Volume:* | | | Reference Drawing: S-104 |
| | | | |
| Tanks: | | Number | NOTES: |
| Nominal size (gal) | 11,183 | 2 | |
| Total volume (nominal), gal | 22,366 | | |
| Largest tank (nominal), gal | 11,183 | | |
| Largest tank (nominal), $ft^3$ | 1,495 | | |
| Overall length of containment area, ft | 21.00 | | |
| Overall width of containment area, ft | 43.50 | | |
| Gross area of containment, $ft^2$ | 914 | | Gross area = (overall length x overall width) |
| Gross area of containment + total surrounding wall areas, $ft^2$ | 990 | | *Surrounding wall areas are considered for the calculation of the required rainfall event volume. This assumes that precipitation that falls on the containment walls flows into the containment area. For adjacent containment areas that share walls, it is assumed that half of the precipitation flows into each adjacent containment area.* |
| 25-year rainfall depth, in | 6.25 | | |
| 25-year rainfall event voume, $ft^3$ | 515 | | 25-year rainfall event volume = (Gross area of containment + total surrounding wall areas) * (rainfall depth/12) |
| Required containment volume, $ft^3$ | 2,010 | | Required containment = Largest tank volume + 25-year rainfall |
| | | | |
| | | | |
| *Step 2 -- Determine Available Containment Capacity:* | | | |
| | | | |
| | | | |
| Tank pads | Diameter (ft) | Number | |
| | 15.12 | 2 | |

| | | | |
|---|---|---|---|
| Total tank pad areas, $ft^2$ | 379 | | Total tank pad area = number of tanks x (octagonal pad diameter)$^2$ x 0.828 *(0.828 constant derived from formula for area of an octagon)* |
| Gross area minus pad areas, $ft^2$ | 535 | | |
| Storage volume -- sloped area: | | | |
| Average depth, in | 4.5 | | |
| **Volume, $ft^3$** | **201** | | Sloped area volume = (average depth/12) x gross area minus pad areas |
| Storage volume -- below pads: | | | |
| Height of pads, in | 6.0 | | |
| **Volume, $ft^3$** | **267** | | Volume below tank pads = (height of pads/12) x gross area minus pad areas |
| Storage volume -- above pads: | | | |
| Tank diameter, ft | 13 | | |
| Total tank areas, not including pad area, $ft^2$ | 269 | | Total tank area = (number of tanks x diameter$^2$ x 3.14)/4 |
| Gross area, minus **tank** areas, $ft^2$ | 644 | | |
| Containment area height above pads, ft | 4.5 | | |
| **Volume, $ft^3$** | **2,898** | | Volume above tank pads = gross area minus tank areas x containment area height above pads |
| **Containment volume available, $ft^3$** | **3,366** | | |
| | | | |
| *Step 3 -- Determine if Containment Volume is Adequate:* | | | |
| | | | |
| | Caustic | | |
| Required containment volume, $ft^3$ | 2,010 | | |
| Containment volume available (minumum), $ft^3$ | 3,366 | | |
| Containment volume adequate? | Yes | | |

| | | | |
|---|---|---|---|
| **FLAMMABLE WASTE TANK STORAGE (AREA 6)** | | | |
| **CONTAINMENT CALCULATIONS** | Prepared By: | SA | |
| | Checked: | APP | 1/3/2017 |
| | | | |
| *Step 1 -- Determine Required Containment Volume:* | | | Reference Drawing: S-104 |
| | | | |
| Tanks: | | Number | NOTES: |
| Nominal size, gal | 13,217 | 4 | |
| Total volume (nominal), gal | 52,868 | | |
| Largest tank (nominal), gal | 13,217 | | |
| Largest tank (nominal), $ft^3$ | 1,767 | | |
| Overall length of containment area, ft | 114.00 | | |
| Overall width of containment area, ft | 16.000 | | |
| Gross area of containment, $ft^2$ | 1,824 | | Gross area = (overall length x overall width) |
| Gross area of containment + total surrounding wall areas, $ft^2$ | 2,021 | | *Surrounding wall areas are considered for the calculation of the required rainfall event volume. This assumes that precipitation that falls on the containment walls flows into the containment area. For adjacent containment areas that share walls, it is assumed that half of the precipitation flows into each adjacent containment area.* |
| 25-year rainfall depth, in | 6.25 | | |
| 25-year rainfall event voume, $ft^3$ | 1,053 | | 25-year rainfall event volume = (Gross area of containment + total surrounding wall areas) * (rainfall depth/12) |
| Required containment volume, $ft^3$ | 2,820 | | Required containment = Largest tank volume + 25-year rainfall |
| | | | |
| | | | |
| *Step 2 -- Determine Available Containment Capacity:* | | | |
| | | | |
| | | | |
| Number of tank piers | 8 | | |
| Tank pier length, ft | 8.00 | | |
| Tank pier width, ft | 1.50 | | |
| Total tank pier areas, $ft^2$ | 96 | | Total tank pier areas = length x width x number of piers |
| Net area minus pier areas, $ft^2$ | 1,728 | | |

| | | | |
|---|---|---|---|
| Storage volume -- sloped area: | | | |
| Average depth, in | 3.0 | | |
| **Volume, $ft^3$** | **432** | | Sloped area volume = (average depth/12) x gross area minus pier areas |
| Storage volume -- below piers: | | | |
| Height of piers, in | 6.0 | | |
| **Volume, $ft^3$** | **864** | | Volume below tank piers = (height of piers/12) x gross area minus pier areas |
| Storage volume -- above piers: | | | |
| Total tank volume, $ft^3$ | 7,068 | | |
| Containment area height above piers, ft | 8.5 | | |
| Gross volume above piers, $ft^3$ | 15,504 | | Gross volume above tank piers = gross area of containment x containment area height above piers |
| **Volume, $ft^3$** | **8,436** | | Actual volume above tank piers = gross volume above tank piers - total tank volume |
| **Containment volume available, $ft^3$** | **9,732** | | |
| | | | |
| | | | |
| *Step 3 -- Determine if Containment Volume is Adequate:* | | | |
| | | | |
| | Flammable | | |
| Required containment volume, $ft^3$ | 2,820 | | |
| Containment volume available (minumum), $ft^3$ | 9,732 | | |
| Containment volume adequate? | Yes | | |

| | | | |
|---|---|---|---|
| **AREA 5 (A)** | | | |
| **CONTAINMENT CALCULATIONS** | Prepared By: | SA | |
| | Checked: | APP | 1/3/2017 |
| | | | |
| *Step 1 -- Determine Required Containment Volume:* | | | Reference Drawing: S-102A |
| | | | |
| Tanks: | Nominal Size (gal) | | NOTES: |
| T-20402 | 32,000 | | |
| T-20401 | 25,000 | | |
| T-90405 | 26,412 | | |
| T-20224 | 501 | | |
| Total volume (nominal), gal | 83,913 | | |
| Largest tank (nominal), gal | 32,000 | | |
| Largest tank (nominal), $ft^3$ | 4,278 | | |
| Overall length of containment area, ft | 69.33 | | |
| Overall width of containment area, ft | 29.830 | | |
| Gross area of containment, $ft^2$ | 2,068 | | Gross area = (overall length x overall width) |
| Gross area of containment + total surrounding wall areas, $ft^2$ | 2,190 | | *Surrounding wall areas are considered for the calculation of the required rainfall event volume. This assumes that precipitation that falls on the containment walls flows into the containment area. For adjacent containment areas that share walls, it is assumed that half of the precipitation flows into each adjacent containment area.* |
| 25-year rainfall depth, in | 6.25 | | |
| 25-year rainfall event voume, $ft^3$ | 1,141 | | 25-year rainfall event volume = (Gross area of containment + total surrounding wall areas) * (rainfall depth/12) |
| Required containment volume, $ft^3$ | 5,419 | | Required containment = Largest tank volume + 25-year rainfall |
| | | | |
| | | | |
| *Step 2 -- Determine Available Containment Capacity:* | | | |
| | | | |
| | | | |
| | | Number | |
| Tank pier length, ft | 2.00 | 10 | |

| | | | |
|---|---|---|---|
| Tank pier width, ft | 1.50 | | |
| Tank pier length, ft | 2.50 | 6 | |
| Tank pier width, ft | 2.00 | | |
| Total tank pier areas, $ft^2$ | 60 | | Tank pier areas = (length x width x number of piers) |
| Pump pad areas, $ft^2$ | 48 | | *Pump pad areas estimated* |
| Gross area, minus pier + pad areas, $ft^2$ | 1,960 | | |
| Storage volume -- sloped area: | | | |
| Average depth, in | 4.0 | | |
| **Volume, $ft^3$** | **653** | | Sloped area volume = (average depth/12) x gross area minus pier and pad areas |
| Storage volume -- below pads & piers: | | | |
| Height of pads, in | 24.0 | | |
| **Volume, $ft^3$** | **3,920** | | Volume below tank pads = (height of pads/12) x gross area minus pier and pad areas |
| Storage volume -- above pads & piers: | | | |
| Total tank areas, not including pad area, $ft^2$ | 554 | | Total tank areas = sum of all 4 tank areas |
| Gross area, minus **tank** areas, $ft^2$ | 1,514 | | |
| Containment area height above pads, ft | 2.0 | | |
| **Volume, $ft^3$** | **3,027** | | Volume above tank piers = gross area minus tank areas x containment area height above pads |
| **Containment volume available, $ft^3$** | **7,601** | | |
| | | | |
| | | | |
| *Step 3 -- Determine if Containment Volume is Adequate:* | | | |
| | | | |
| | | | |
| Required containment volume, $ft^3$ | 5,419 | | |
| Containment volume available (minumum), $ft^3$ | 7,601 | | |
| Containment volume adequate? | Yes | | |

| | | | |
|---|---|---|---|
| **AREA 5 (B): T-80191** | | | |
| **CONTAINMENT CALCULATIONS** | Prepared By: | SA | |
| | Checked: | APP | 1/3/2017 |
| | | | |
| *Step 1 -- Determine Required Containment Volume:* | | | Reference Drawing: S-102A |
| | | | |
| Tanks: | Nominal Size (gal) | Number | NOTES: |
| T-80191 | 501 | 1 | |
| Total volume (nominal), gal | 501 | | |
| Largest tank (nominal), gal | 501 | | |
| Largest tank (nominal), $ft^3$ | 67 | | |
| Overall length of containment area, ft | 14.5 | | |
| Overall width of containment area, ft | 12.6 | | |
| Gross area of containment, $ft^2$ | 183 | | Gross area = (overall length x overall width) |
| Gross area of containment + total surrounding wall areas, $ft^2$ | 208 | | *Surrounding wall areas are considered for the calculation of the required rainfall event volume. This assumes that precipitation that falls on the containment walls flows into the containment area. For adjacent containment areas that share walls, it is assumed that half of the precipitation flows into each adjacent containment area.* |
| 25-year rainfall depth, in | 6.25 | | |
| 25-year rainfall event voume, $ft^3$ | 108 | | 25-year rainfall event volume = (Gross area of containment + total surrounding wall areas) * (rainfall depth/12) |
| Required containment volume, $ft^3$ | 175 | | Required containment = Largest tank volume + 25-year rainfall |
| | | | |
| *Step 2 -- Determine Available Containment Capacity:* | | | |
| | | | |
| | | | |
| Tank pads | Diameter (ft) | Number | |
| | 6.00 | 1 | |
| Total tank pad areas, $ft^2$ | 30 | | Total tank pad area = number of tanks x (octagonal pad diameter)$^2$ x 0.828 *(0.828 constant derived from formula for area of an octagon)* |
| Gross area, minus pad areas, $ft^2$ | 153 | | |

| | | |
|---|---|---|
| Storage volume -- sloped area: | | |
| Average depth, in | 2.0 | *The slope across the width of Area 5 is constant from 24 feet to 23.25 feet over the overall width of 29.84 feet. Therefore the slop across the containment area for T-80191 goes from elevation 24 feet to an elevation of 23.64 feet, over the containment area width of 14.5 feet.* |
| **Volume, $ft^3$** | **26** | Sloped area volume = (average depth/12) x gross area minus pad areas |
| Storage volume -- below pads: | | |
| Height of pads, in | 8.0 | |
| **Volume, $ft^3$** | **102** | Volume below tank pads = (height of pads/12) x gross area minus pad areas |
| Storage volume -- above pads: | | |
| Tank diameter, ft | 3.25 | |
| Total tank areas, not including pad area, $ft^2$ | 8 | Total tank area = (number of tanks x $diameter^2$ x 3.14)/4 |
| Gross area, minus **tank** areas, $ft^2$ | 175 | |
| Containment area height above pads, ft | 3.3 | |
| **Volume, $ft^3$** | **582** | Volume above tank pads = gross area minus tank areas x containment area height above pads |
| **Containment volume available, $ft^3$** | **710** | |
| *Step 3 -- Determine if Containment Volume is Adequate:* | | |
| Required containment volume, $ft^3$ | 175 | |
| Containment volume available (minumum), $ft^3$ | 710 | |
| Containment volume adequate? | Yes | |

| | | | |
|---|---|---|---|
| **AREA 5 (C): T-80190** | | | |
| **CONTAINMENT CALCULATIONS** | Prepared By: | SA | |
| | Checked: | APP | 1/3/2017 |
| | | | |
| *Step 1 -- Determine Required Containment Volume:* | | | Reference Drawing: S-102A |
| | | | |
| Tanks: | Nominal Size (gal) | Number | NOTES: |
| T-80190 | 501 | 1 | |
| Total volume (nominal), gal | 501 | | |
| Largest tank (nominal), gal | 501 | | |
| Largest tank (nominal), $ft^3$ | 67 | | |
| Overall length of containment area, ft | 14.50 | | |
| Overall width of containment area, ft | 12.630 | | |
| Gross area of containment, $ft^2$ | 183 | | Gross area = (overall length x overall width) |
| Gross area of containment + total surrounding wall areas, $ft^2$ | 208 | | *Surrounding wall areas are considered for the calculation of the required rainfall event volume. This assumes that precipitation that falls on the containment walls flows into the containment area. For adjacent containment areas that share walls, it is assumed that half of the precipitation flows into each adjacent containment area.* |
| 25-year rainfall depth, in | 6.25 | | |
| 25-year rainfall event voume, $ft^3$ | 108 | | 25-year rainfall event volume = (Gross area of containment + total surrounding wall areas) * (rainfall depth/12) |
| Required containment volume, $ft^3$ | 175 | | Required containment = Largest tank volume + 25-year rainfall |
| | | | |
| *Step 2 -- Determine Available Containment Capacity:* | | | |
| | | | |
| | | | |
| Tank pads | Diameter (ft) | Number | |
| | 6.00 | 1 | |
| Total tank pad areas, $ft^2$ | 30 | | Total tank pad area = number of tanks x (octagonal pad diameter)$^2$ x 0.828 *(0.828 constant derived from formula for area of an octagon)* |
| Gross area, minus pad areas, $ft^2$ | 153 | | |

| | | |
|---|---|---|
| Storage volume -- sloped area: | | |
| Average depth, in | 2.0 | *The slope across the width of Area 5 is constant from 24 feet to 23.25 feet over the overall width of 29.84 feet (see calculations for Area 5 (A)). Therefore the slope across the containment area for T-80190 goes from elevation 23.61 feet to an elevation of 23.25 feet, over the containment area width of 14.5 feet.* |
| **Volume, $ft^3$** | **26** | Sloped area volume = (average depth/12) x gross area minus pad areas |
| Storage volume -- below pads: | | |
| Height of pads, in | 12.0 | |
| **Volume, $ft^3$** | **153** | Volume below tank pads = (height of pads/12) x gross area minus pad areas |
| Storage volume -- above pads: | | |
| Tank diameter, ft | 3.25 | |
| Total tank areas, not including pad area, $ft^2$ | 8 | Total tank area = (number of tanks x diameter$^2$ x 3.14)/4 |
| Gross area, minus **tank** areas, $ft^2$ | 175 | |
| Containment area height above pads, ft | 3.3 | |
| **Volume, $ft^3$** | **582** | Volume above tank pads = gross area minus tank areas x containment area height above pads |
| **Containment volume available, $ft^3$** | **761** | |
| | | |
| *Step 3 -- Determine if Containment Volume is Adequate:* | | |
| | | |
| Required containment volume, $ft^3$ | 175 | |
| Containment volume available (minumum), $ft^3$ | 761 | |
| Containment volume adequate? | Yes | |

| | | | |
|---|---|---|---|
| **AREA 5 (D)** | | | |
| **CONTAINMENT CALCULATIONS** | Prepared By: | SA | |
| | Checked: | APP | 1/3/2017 |
| | | | |
| *Step 1 -- Determine Required Containment Volume:* | | | Reference Drawing: S-102A |
| | | | |
| Tanks: | Nominal Size (gal) | Diameter (ft) | NOTES: |
| T-12263 | 4750 | 7.25 | |
| T12264 | 501 | 3.25 | |
| T-12215 | 2999 | 8 | |
| R-12201 | 13,000 | 11.5 | |
| R-12213 | 3,000 | 8 | |
| T-12231 | 3,000 | 8 | |
| R-12267 | 500 | 3.25 | |
| Total volume (nominal), gal | 27,750 | | |
| Largest tank (nominal), gal | 13,000 | | |
| Largest tank (nominal), $ft^3$ | 1,738 | | |
| Overall length of containment area, ft | 45.00 | | |
| Overall width of containment area, ft | 29.830 | | |
| Gross area of containment, $ft^2$ | 1,342 | | Gross area = (overall length x overall width) |
| Gross area of containment + total surrounding wall areas, $ft^2$ | 1,437 | | *Surrounding wall areas are considered for the calculation of the required rainfall event volume. This assumes that precipitation that falls on the containment walls flows into the containment area. For adjacent containment areas that share walls, it is assumed that half of the precipitation flows into each adjacent containment area.* |
| 25-year rainfall depth, in | 6.25 | | |
| 25-year rainfall event voume, $ft^3$ | 749 | | 25-year rainfall event volume = (Gross area of containment + total surrounding wall areas) * (rainfall depth/12) |
| Required containment volume, $ft^3$ | 2,487 | | Required containment = Largest tank volume + 25-year rainfall |
| | | | |
| *Step 2 -- Determine Available Containment Capacity:* | | | |
| | | | |
| | | Number | |
| Tank pier length, ft | 2.00 | 16 | Tank pier areas = (length x width x number of pads) |

| | | | |
|---|---|---|---|
| Tank pier width, ft | 1.50 | | |
| Tank pad diameter, ft | 9.00 | 1 | Total tank pad area = number of tanks x (octagonal pad diameter)$^2$ x 0.828 *(0.828 constant derived from formula for area of an octagon)* |
| Total tank pier and pad areas, ft$^2$ | 115 | | Sum of tank pier and pad areas |
| Tanks without pads or piers areas, ft$^2$ | 67 | | *T-12264, R-12213, and R-12267 do not have piers or pads, and the areas must be deducted from the gross containment area.* |
| Pump pad areas, ft$^2$ | 50 | | *Pump pad areas estimated* |
| Gross area, minus pad areas, ft$^2$ | 1,110 | | |
| Storage volume -- sloped area: | | | |
| Average depth, in | 4.0 | | |
| **Volume, ft$^3$** | **370** | | Sloped area volume = (average depth/12) x gross area minus pad areas |
| Storage volume -- below piers & pads: | | | |
| Height of pads, in | 24.0 | | *Conservative because T-12263 pad is actually only 8 inches high, and pump pads should be only 6 inches high, but to keep calculations as simple as possibe, kept all pier/pad areas together.* |
| **Volume, ft$^3$** | **2,221** | | Volume below tank pads = (height of pads/12) x gross area minus pad areas |
| Storage volume -- above pads: | | | |
| Total tank areas, not including pad area, ft$^2$ | 312 | | Total tank areas = sum of all 7 tank areas |
| Gross area, minus **tank** areas, ft$^2$ | 1,030 | | |
| Containment area height above pads, ft | 2.0 | | |
| **Volume, ft$^3$** | **2,060** | | Volume above tank pads = gross area minus tank areas x containment area height above pads |
| **Containment volume available, ft$^3$** | **4,651** | | |
| | | | |
| *Step 3 -- Determine if Containment Volume is Adequate:* | | | |
| | | | |
| Required containment volume, ft$^3$ | 2,487 | | |
| Containment volume available (minumum), ft$^3$ | 4,651 | | |
| Containment volume adequate? | Yes | | |

| | | | |
|---|---|---|---|
| **PROCESS BUILDING** | Prepared By: | SA/MJF | |
| **CONTAINMENT CALCULATIONS** | Checked: | APP | 1/3/2017 |
| | | | |
| *Step 1 -- Determine Required Containment Volume:* | | | Reference Drawing: S-102A |
| | | | |
| Tanks: | Nominal Size (gal) | | NOTES: |
| Largest tank (nominal), gal | 30,000 | | |
| Largest tank (nominal), $ft^3$ | 4,011 | | |
| Overall length of process building area, ft | 113 | | |
| Overall width of process building area, ft | 67 | | |
| Control/Electrical Room & forklift areas, $ft^2$ | 1683 | | *The Control Room and Electrical Rooms are each 24 ft x 25 ft, for a total area of 24 x 25 x 2 = 1200 $ft^2$ that needs to be deducted from the overall process building are, plus a 21x23 = 483 sf deduct for the forklift area in the northwest corner. Total deduct 1683 sf.* |
| Net area of containment, $ft^2$ | 5,888 | | |
| Sprinkler allowance, $ft^3$ | 6,684 | | |
| Required containment volume, $ft^3$ | 10,695 | | Required containment volume = Largest tank volume + sprinkler allowance |
| | | | |
| *Step 2 -- Determine Available Containment Capacity:* | | | |
| | | | |
| *Area Deductions:* | | | |
| Building & Tank piers: | | Number | |
| Building pier length, ft | 2.00 | 4 | |
| Building pier width, ft | 2.00 | | |
| Tank pier length, ft | 2.00 | 16 | |
| Tank pier width, ft | 2.00 | | |
| Total tank pier areas, $ft^2$ | 80 | | Total tank pier areas = length x width x number of piers |
| Gross area, minus pier areas, $ft^2$ | 5,808 | | |
| *Storage Volumes:* | | | |
| Storage volume -- sloped area: | | | |
| Average depth, in | 1.5 | | |
| **Volume, $ft^3$** | **726** | | Sloped area volume = (average depth/12) x gross area minus pier areas |
| Storage volume -- below piers: | | | |
| Height of piers, in | 21.0 | | |
| **Volume, $ft^3$** | **10,164** | | Volume below tank piers = (height of piers/12) x gross area minus pier areas |
| **Containment volume available, $ft^3$** | **10,890** | | |
| | | | |
| *Step 3 -- Determine if Containment Volume is Adequate:* | | | |
| | | | |
| | | | |
| Required containment volume, $ft^3$ | 10,695 | | |

| | | | | | | | | |
|---|---|---|---|---|---|---|---|---|
| Containment volume available (minumum), $ft^3$ | 10,890 | | | | | | | |
| Containment volume adequate? | Yes | | | | | | | |

| | | | |
|---|---|---|---|
| **TRUCK UNLOADING AREA 9** | | | |
| **CONTAINMENT CALCULATIONS** | Prepared By: | SA | |
| | Checked: | APP | 1/3/2017 |
| | | | |
| *Step 1 -- Determine Required Containment Volume:* | | | Reference Drawing: S-105 |
| | | | |
| Spill volume, gal | 8,000 | | NOTES: |
| Spill volume, $ft^3$ | 1,070 | | Required Containment: Truck unloading area does not contain any tanks, but is designed for an 8,000 gallon spill and 25-year 24-hour rainfall event. The containment area itself is encompassed by sections 1 and 2. However, runoff from the ground between the containment area and the security wall, section 3, is sloped towards the containment area. So sections 1 and 2 will serve as containment for rainfall volume over all three sections. |
| Overall length of section 1, ft | 191.33 | | |
| Overall width of section 1, ft | 86.59 | | |
| Area of section 1, $ft^2$ | 16,567 | | |
| Overall length of section 2, ft | 48.25 | | |
| Overall width of section 2, ft | 9.83 | | |
| Area of section 2, $ft^2$ | 474 | | |
| Overall length of section 3, ft | 191.33 | | |
| Overall width of section 3, ft | 12.00 | | |
| Area of section 3, $ft^2$ | 2,296 | | |
| Gross area of for rainfall volume, $ft^2$ | 19,338 | | Gross area for rainfall volume = area of section 1 + area of section 2 + area of section 3 |
| 25-year rainfall event, in | 6.25 | | |
| 25-year rainfall event voume, $ft^3$ | 10,072 | | |
| Required containment volume, $ft^3$ | 11,141 | | Required containment = 8,000 gal spill + 25-year rainfall |
| | | | |
| | | | |
| *Step 2 -- Determine Available Containment Capacity:* | | | |
| | | | Available containment area volume will neglect section 2 to simplify calculations. Consequently calculations are conservative. |
| *Storage volumes* | | | |
| Width of curb, ft | 0.67 | | |
| Length of containment area, ft | 190.00 | | Length of containment = overall length of section 1 - width of curb x 2 |
| Width of containment area, ft | 85.17 | | |
| Gross containment area, $ft^2$ | 16,182 | | |
| Storage volume -- curbed area: | | | |
| Height of curbed area, in | 6.0 | | |
| **Volume, $ft^3$** | **8,091** | | Volume of 4" curbed area = (curbed area height) x (gross containment area) |
| Storage volume -- sloped area: | | | |
| Average depth, in | 6.0 | | |
| **Volume, $ft^3$** | **8,091** | | Sloped area volume = (average depth/12) x gross containment area |

| | | | |
|---|---|---|---|
| **Gross containment volume, $ft^3$** | **16,182** | | |
| *Volume deductions:* | | | The containment area is not uniformly sloped, and so deductions of certain sections are necessary. There is an end ramp at each end of the containment area, these are Section 4. As shown in Figure XXXX, the ramp slopes from an elevation of 23.5 feet to an elevation of 23 feet. There is also a triangular valley area at each end after the end ramps that is sloped in two directions towards the sump. These areas are labeled as Section 5. These volumes will be deducted from the gross volume to calculate the actual available containment volume. |
| Section 4, end ramps volume: | | | |
| Section 4 length, ft | 6.0 | | |
| Section 4 width, ft | 85.17 | | |
| Section 4 area, $ft^2$ | 511 | | |
| Average depth of slope, in | 3.0 | | |
| **Volume, $ft^3$** | **255.51** | | Section 4 volume = (Section 4 area) x (Average depth of slope/12) x 2 (Multipled by 2 to duplicate the volume for each end) |
| Section 4, sloped area below end ramps: | | | *This calculation accounts for the sloped area from 23 feet to 22 feet towards the sumps along the width of Section 4* |
| Average depth of slope, in | 6.0 | | |
| **Volume, $ft^3$** | **511** | | Section 4 sloped area volume = (Section 4 area) x average depth of slope/12 x 2 |
| Section 5, pyramid volume: | | | *Section 5 is sloped in two directions and forms the shape of a rectangular pyramid as shown in Figure XXXX. The volume of a rectangular pyramid is (length x width x height) / 3* |
| Section 5 length, ft | 85.17 | | |
| Section 5 width, ft | 1.0 | | |
| Section 5 height, ft | 15.0 | | |
| **Volume, $ft^3$** | **852** | | Volume =((length x width x height) / 3) * 2 *(Multipled by 2 to duplicate the volume for each end)* |
| **Containment volume available, $ft^3$** | **14,564** | | Containment volume available = gross containment volume - Section 4 end ramps volume - Section 4 sloped area below end ramps - Section 5 pyramid volume |
| | | | |
| | | | |
| *Step 3 -- Determine if Containment Volume is Adequate:* | | | |
| | | | |
| | | | |
| Required containment volume, $ft^3$ | 11,141 | | |
| Containment volume available (minumum), $ft^3$ | 14,564 | | |
| Containment volume adequate? | Yes | | |

**BIOLOGICAL TREATMENT (AREA 11)**
**CONTAINMENT CALCULATIONS**

Prepared By: SA
Checked: APP 1/3/2017

*Step 1 -- Determine Required Containment Volume:*

Reference Drawing: S-107

| | |
|---|---|
| Largest tank (nominal), gal | 110,000 |
| Largest tank (nominal), $ft^3$ | 14,706 |
| Overall length of North section, ft | 88.00 |
| Overall width of North section, ft | 59.00 |
| Overall area of North section, $ft^2$ | 5,192 |
| Overall length of triangle 1, ft | 17.00 |
| Overall width of triangle 1, ft | 26.50 |
| Area of triangle 1, $ft^2$ | 225 |
| Overall length of triangle 2, ft | 11.00 |
| Overall width of triangle 2, ft | 3.00 |
| Area of triangle 2, $ft^2$ | 17 |
| Net area of North section, $ft^2$ | 4,950 |
| Overall length of South section, ft | 98 |
| Overall width of South section, ft | 74 |
| Overall area of South section, $ft^2$ | 3,626 |
| Overall length of triangle 3, ft | 26 |
| Overall width of triangle 3, ft | 22 |
| Area of triangle 3, $ft^2$ | 280 |
| Net area of South section, $ft^2$ | 3,347 |
| Gross area for rainfall volume, $ft^2$ | 8,297 |
| 25-year rainfall event, in | 6.25 |
| 25-year rainfall event voume, $ft^3$ | 4,321 |
| Required containment volume, $ft^3$ | 19,027 |

NOTES:
*To simplify area calculations, Area 11 is divided into the North section and the South section. Triangles 1 and 2 are deducted from the overall area of the North section, and Triangle 3 is deducted from the overall area of the South section to calculate these geometrically irregular areas.*

Area of a triangle = (length x width) / 2

Net area of North section = Overall area of North section - area of triangle 1 - area of triangle 2

South section is a triangle, use formula for area of a triangle

Net area of South section = Overall area of South section - area of triangle 3

Gross area for rainfall volume = Net area of North section + Net area of South section

Required containment = Largest tank volume + 25-year rainfall

*Step 2 -- Determine Available Containment Capacity:*

North Section

| | |
|---|---|
| *Area Deductions:* | |
| Walls, $ft^2$ | 212 |
| Misc pads/equipment, $ft^2$ | 307 |
| T-90231 pad diameter, ft | 20.0 |
| T-90231 pad area, $ft^2$ | 331 |
| T-90235 pad diameter, ft | 23.0 |
| Area of triangle 4 | 85.5 |
| Area of triangle 5 | 25 |
| T-90235 pad area in North section, $ft^2$ | 61 |
| Containment area of North section, $ft^2$ | 4,040 |
| ***Storage Volumes below tank pads:*** | |
| Storage volume -- sloped area: | |
| Average depth, in | 4.5 |
| **Volume, $ft^3$** | **1,515** |
| Storage volume -- below pads: | |
| Height of pads, in | 6.0 |
| **Volume, $ft^3$** | **2,020** |

South Section

| | |
|---|---|
| *Area Deductions:* | |

*The walls around Area 11 have a width of 1 foot, and the containment area does not include the area of the walls.*
*The area covered by miscellaneous pump pads and equipment is scaled and is not shown.*

T-90231 area = (octagonal pad diameter)2 x 0.828 *(0.828 constant derived from formula for area of an octagon)*
*The T-90235 pad is split between the North section and the South section. The area included in the North section is calculated by taking the area of scaled triangle 4, and subtracting the area of scaled triangle 5.*

Containment area of North section = Net area of North section - walls - misc pads and equipment - T-90231 pad area - T-90235 pad area in North section

Sloped area volume = (average depth/12) x Containment area of North section

Volume below tank pads = (height of pads/12) x Containment area of North section

| | | | |
|---|---|---|---|
| Walls, $ft^2$ | 169 | | *The walls around Area 11 have a width of 1 foot, and the containment area does not include the area of the walls.* |
| Pump pads, $ft^2$ | 84 | | *The area covered by miscellaneous pump pads and equipment is scaled and is not shown.* |
| Misc pads/equipment, $ft^2$ | 39 | | |
| Tank pads diameter, ft | 23.0 | Number of Tanks | |
| Tank pad areas, $ft^2$ | 876 | 2 | Tank pad areas = number of tanks x (octagonal pad diameter)$^2$ x 0.828 *(0.828 constant derived from formula for area of an octagon)* |
| Overall T-90235 pad area, $ft^2$ | 438 | | |
| T-90235 pad area in South section, $ft^2$ | 378 | | T-90235 pad area in South section = Overall T-90235 pad area - T-90235 pad area in North section |
| Containment area of South section | 1,801 | | Containment area of South section = Net area of South section - walls - misc pads and equipment - Tank pad areas - T-90235 pad area in South section |
| ***Storage Volumes below tank pads:*** | | | |
| Storage volume -- sloped area: | | | |
| Average depth, in | 6.0 | | |
| **Volume, $ft^3$** | **900** | | Sloped area volume = (average depth/12) x Containment area of South section |
| Storage volume -- below pads: | | | |
| Height of pads, in | 6.0 | | |
| **Volume, $ft^3$** | **900** | | Volume below tank pads = (height of pads/12) x Containment area of South section |

***Storage Volumes above tank pads:***

| | | | |
|---|---|---|---|
| Total gross containment area, $ft^2$ | 8,297 | | Same as gross area for rainfall volume |
| *Deductions* | | | |
| Total walls, $ft^2$ | 380 | Numer of tanks | |
| Tank diameter, ft | 20 | 3 | |
| Tank diameter, ft | 17 | 1 | |
| Tank diameter, ft | 12 | 1 | |
| Tank diameter, ft | 10 | 2 | |

| | |
|---|---|
| Total tank areas, $ft^2$ | 1,439 |
| Misc pads/equipment, $ft^2$ | 641 |
| Total deductions, $ft^2$ | 2,460 |
| TOTAL containment area, $ft^2$ | 5,837 |
| Containment area height above pads, ft | 3.50 |
| **Volume, $ft^3$** | **20,429** |
| **Containment volume available, $ft^3$** | **25,765** |

Total deductions = total walls + total tank areas + misc pads and equipment

TOTAL containment area = total gross containment area - total deductions

Volume above tank pads = TOTAL containment area x containment area height above pads

*Step 3 -- Determine if Containment Volume is Adequate:*

| | |
|---|---|
| Required containment volume, $ft^3$ | 19,027 |
| Containment volume available (minumum), $ft^3$ | 25,765 |
| Containment volume adequate? | Yes |

**EFFLUENT WATER TANKS (AREA 11)**
**CONTAINMENT CALCULATIONS**

Prepared By: SA
Checked: APP 1/3/2017

*Step 1 -- Determine Required Containment Volume:*

Reference Drawing: S-108

| Tanks: | | Number |
|---|---|---|
| Nominal size (gal) | 110,000 | 4 |
| Total volume (nominal), gal | 440,000 | |
| Largest tank (nominal), gal | 110,000 | |
| Largest tank (nominal), $ft^3$ | 14,706 | |
| Overall length of containment area, ft | 92.0 | |
| Overall width of containment area, ft | 46.0 | |
| Gross area of containment, $ft^2$ | 4,232 | |
| Gross area of containment + total surrounding wall areas, $ft^2$ | 4,508 | |
| 25-year rainfall depth, in | 6.25 | |
| 25-year rainfall event voume, $ft^3$ | 2,348 | |
| Required containment volume, $ft^3$ | 17,054 | |

NOTES:

Gross area = (overall length x overall width)

*Surrounding wall areas are considered for the calculation of the required rainfall event volume. This assumes that precipitation that falls on the containment walls flows into the containment area. For adjacent containment areas that share walls, it is assumed that half of the precipitation flows into each adjacent containment area.*

25-year rainfall event volume = (Gross area of containment + total surrounding wall areas) * (rainfall depth/12)

Required containment = Largest tank volume + 25-year rainfall

*Step 2 -- Determine Available Containment Capacity:*

| Tank pads | Diameter (ft) | Number |
|---|---|---|
| | 23.00 | 4 |

| | |
|---|---|
| Total tank pad areas, $ft^2$ | 1,752 |
| Gross area minus pad areas, $ft^2$ | 2,480 |
| Storage volume -- sloped area: | |
| Average depth, in | 4.5 |
| **Volume, $ft^3$** | **930** |
| Storage volume -- below pads: | |
| Height of pads, in | 9.0 |
| **Volume, $ft^3$** | **1,860** |
| Storage volume -- above pads: | |
| Tank diameter, ft | 20 |
| Total tank areas, not including pad area, $ft^2$ | 1256 |
| Gross area, minus **tank** areas, $ft^2$ | 2976 |
| Containment area height above pads, ft | 6.25 |
| **Volume, $ft^3$** | **18,600** |
| **Containment volume available, $ft^3$** | **21,390** |

Total tank pad area = number of tanks x (octagonal pad diameter)$^2$ x 0.828 *(0.828 constant derived from formula for area of an octagon)*

Sloped area volume = (average depth/12) x gross area minus pad areas

Volume below tank pads = (height of pads/12) x gross area minus pad areas

Total tank area = (number of tanks x diameter$^2$ x 3.14)/4

Volume above tank pads = gross area minus tank areas x containment area height above pads

*Step 3 -- Determine if Containment Volume is Adequate:*

| | Caustic |
|---|---|
| Required containment volume, $ft^3$ | 17,054 |
| Containment volume available (minumum), $ft^3$ | 21,390 |
| Containment volume adequate? | Yes |

# APPENDIX D-6

# TYPICAL SOLIDS CONTAINERS

# Tri-Wall's Hazardous Waste Container

# BEATS THE DRUM!

For cost efficiency, ease of use, and ease of disposal, Tri-Wall's Hazardous Waste Container beats the drum.

The Tri-Wall Hazardous Waste Container* consists of a Tri-Wall Pak® triple wall fiberboard container; a 6 mil heavy-duty poly liner; and a custom-specified pallet.

## Approved for Hazardous Materials

The Tri-Wall Hazardous Waste Container meets UN Performance Oriented Packaging requirements for the construction of bulk containers used in the transport of hazardous materials in Packing Groups II and III.

This includes Corrosive solids, Poisonous solids, Oxidizing solids, and Flammable solids. It's also ideal for hazardous materials in the CRM classification and non-hazardous solid wastes.

## Cost Efficient

The Hazardous Waste Container holds 1 cubic yard of waste, up to 2400 pounds, and replaces almost four 55-gallon drums. Initial purchase price is competitive... plus handling/disposal cost savings can be significant.

## Easy to Use

One person can assemble, fill, seal, and move the Hazardous Waste Container.

## Easy to Dispose

The Hazardous Waste Container is easily disposed or incinerated, eliminating the expensive cleaning and disposal cost of drums... easing your cradle-to-grave liability worries.

## March to the Tune of a Different Container

The Tri-Wall Hazardous Waste Container beats the drum! For more information, call today.

Tri-Wall®

A Weyerhaeuser Company

*Distributed by:*

**Paper Systems, Inc.**
P.O. Box 6188
321 S.W. 4th Street
Des Moines, IA 50309
Tel 800-342-2655
Fax 515-280-9219
An authorized distributor of Tri-Wall Hazardous Waste Containers

*Tri-Wall Hazardous Waste Containers meet UN Performance Oriented Packaging requirements for the transport of dangerous goods in Packing Groups II and III, and DOT specs 49 CFR 173.

HW-300

BAGCORP
Integrity Delivered

# Product Specification

| | |
|---|---|
| Customer | BAG CORPORATION |
| Customer # | |
| Customer Spec. Number | |
| BAG Spec. Number | 3535DPUL2U-UN |
| Prepared by | Shirey Sanders |
| Date | 5/8/2014 |
| Bag Style | DT/FB/UN/WL/UN-Cert./2200#//U-Panel |
| Bag Diameter | 45" DIA |
| Bag Cubic Foot | 28 CU. FT. |
| Working Load | 2200# 6:1 |
| Product Utilization | Various products |
| Specification D.O.T. / U.N. | UN Pkg II *(UN 3077)* |
| Lift Style | Strap bag with 2" PP webbing |
| Loop Size | 10" lift loop |
| Diameter | 45" Diameter bag- 35" x 35" x 35" seam to seam (U-Panel Bag) |
| Material | 6.5 uncoated material |
| Fill Spouts | Duffle top x 30" long, 5 oz uncoated material |
| Discharge Spouts | Flat Bottom |
| Liner Type | |
| Liner Diameter/Dimensions | Minimun - 72" layflat (144" circumference) x 90", heat sealed on bottom and inserted. (corrected 12/17/14) |
| Liner Mil | 3 mil |
| Closure | Web tie closure on duffle top |
| Document Pouch | 13" x 18" ziplock sewn in top setting seam open to the right. |
| Label | BAG handling ticket with seperate label indicating UN number and closure instructions |
| RAT/ Top Band | **Branded webbing with BAG logo sewn in top setting seam.** |
| Requirments | All seams to the outside, 6:1 safety factor & UV protection per ISO 21898 |
| Packaging | 140 pcs per bale |
| **Bag Weight** | **2.696 kg** |

Revisions:

7/9/15 Changed document pouch from a 10 x 12 to a 13 x 18 (SS). v Casey7/10/15

5/10/16 Added branded logo reinforcement web in top setting seam and bag weight (SS).

| Customer Approval Signature | Date | Phone |
|---|---|---|

Copyright © 2001 by BAG Corp.
All rights reserved. Cannot be reproduced without the express written consent of BAG Corp. except for intra-company use.

# Pallet Rack Storage Systems

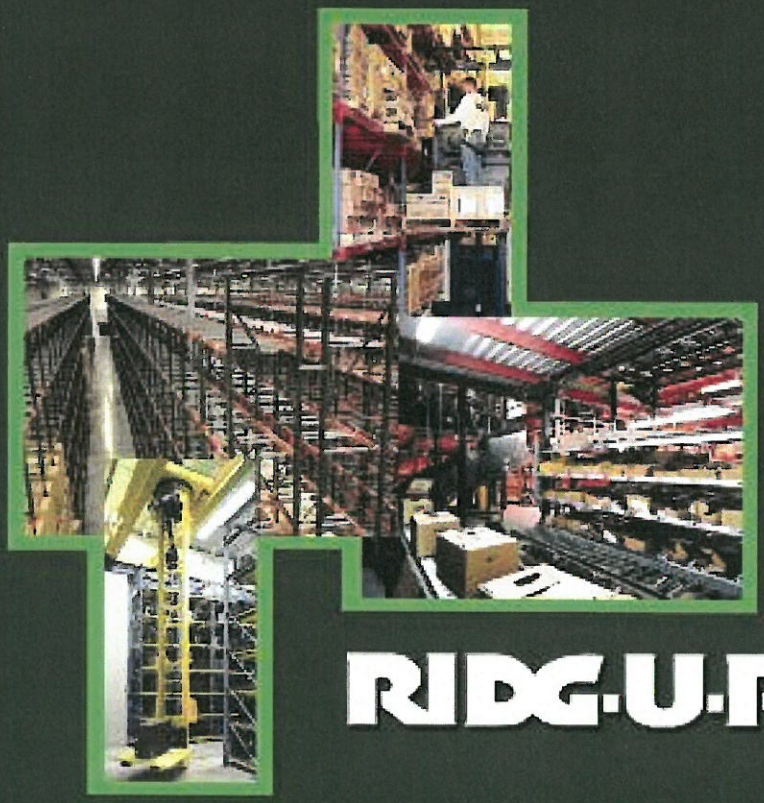

RIDG-U-RAK®

PR1

# Your Single Source for Quality Pallet Rack Storage Systems

Ridg-U-Rak is a world-class manufacturer of quality pallet rack storage systems as well as a wide variety of other systems. Since 1942, Ridg-U-Rak has been a pioneer in the development of innovative pallet rack storage with more than 400,000 square feet of production and warehouse space. As such, we are able to effectively serve as your single source for all your pallet rack storage requirements. For information on how we can help in your pallet rack selection, please call... Toll Free 1-866-479-7225. We're ready when you are.

# Roll Formed Columns and Beams

At the heart of most Ridg-U-Rak structures is our famous roll-formed column design. Each upright is fully welded using heavy-duty bracing and base plates to ensure structural integrity and to eliminate installation delays and costs inherent in bolt-together uprights.

In addition to roll formed sections, we offer structural steel shapes in a virtually unlimited selection of sizes and capacities to meet your requirements.

Ridg-U-Rak offers a wide variety of column and beam profiles in various gages to provide our customers with the most efficient solutions possible. All uprights, beams and support components are engineered to maximum load capacities while minimizing weight to reduce cost.

*Original Slotted*

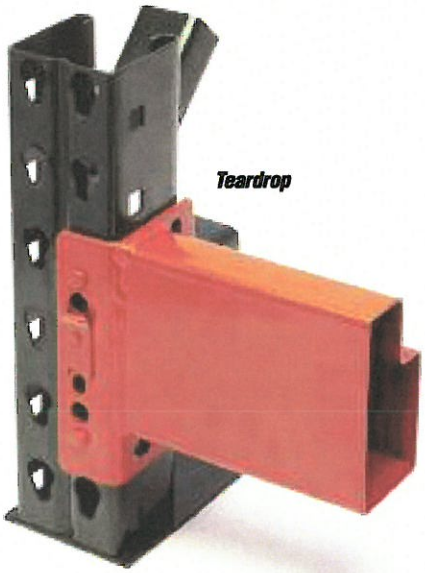

*Teardrop*

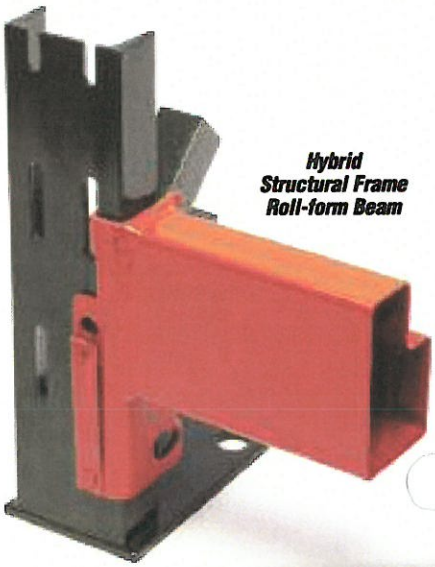

*Hybrid Structural Frame Roll-form Beam*

## Leading the Industry in Pallet Rack Storage Systems

Ridg-U-Rak is one of the largest pallet rack storage manufacturers in North America, producing more than 100 million pounds of pallet rack, high density storage rack and specialized rack systems annually. We offer engineering, design, project management and installation services that meet your pallet rack needs on time and on budget.

Our customers include distribution centers, manufacturing facilities, large scale retail and home improvement outlets, industrial warehouses and assembly operations. The Ridg-U-Rak team has the experience to handle projects ranging from small selective systems to large complex projects incorporating a variety of storage solutions. A national network of distributors provide knowledgeable service, and their stocking locations supply a "quick ship" option for standard products.

For over 70 years, Ridg-U-Rak has been a pioneer in developing and improving pallet rack safety, including Column Sentry reinforcements, slant back/offset uprights, beam-to-column locking mechanisms and Seismic Base Isolation technology.

# Where to find it...

**Slotted Rack**
Frames & Beams.....4-5


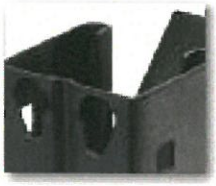


**Teardrop Rack**
Frames & Beams.....6-7


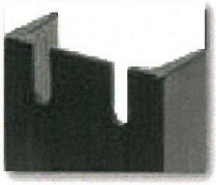


**Structural Steel Rack**
Frames & Beams.....8-9


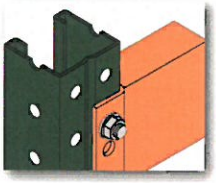


**Frame Options**.....10
**Beam Options**.....11

**Column Sentry II**
Reinforcing for Impact Protection.....12-13


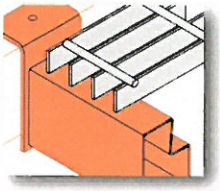


**Accessories**
Slotted & Teardrop Beams.....14
Structural Steel Beams.....15

# Slotted *Frames*

Ridg-U-Rak original slotted pallet rack systems feature automatic lock beam-to-column connections and are available in a virtually unlimited selection of sizes and load capacities. Our six-bend, roll-formed columns with fully welded bracing set the standard for rigidity, strength and durability in pallet rack systems.

Slotted pallet rack is available in a vast array of sizes and load capacities and is extremely versatile. The slotted system features long-lasting powder coated finishes to ensure enduring performance.

### Features

- Roll-formed columns 180° return flanges
- 100% welded uprights
- Superior bracing design
- Large base plates
- Offset anchor holes
- 4" vertical adjustability

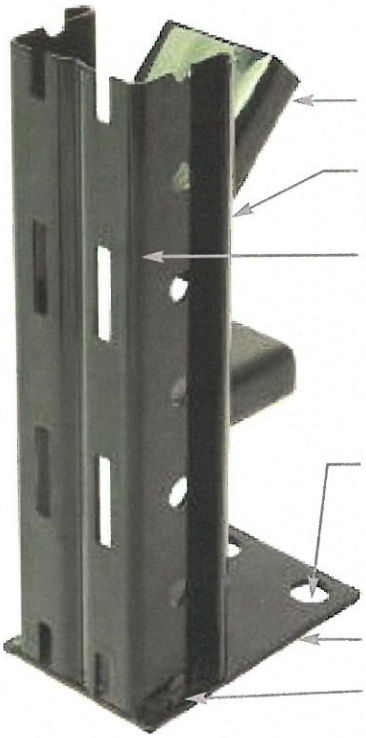


## Frame Capacities

| Vertical Beam Spacing | 32C (3X2-1/4) | | | 33C (3X3) | | | | | 43C (4X3) | |
|---|---|---|---|---|---|---|---|---|---|---|
| | UF-S32C | UF-M32C | UF-H32C | UF-S33C | UF-R33C | UF-M33C | UF-Y33C | UF-H33C | UF-M43C | UF-H43C |
| 36" | 24,700 | 29,800 | 36,400 | 29,800 | 35,500 | 40,500 | 44,000 | 49,100 | 51,700 | 63,200 |
| 42" | 23,500 | 27,900 | 34,100 | 28,100 | 33,500 | 37,100 | 41,300 | 45,000 | 49,400 | 61,100 |
| 48" | 22,100 | 26,900 | 32,800 | 26,200 | 31,100 | 35,300 | 38,300 | 42,700 | 48,000 | 58,700 |
| 54" | 20,700 | 25,700 | 31,300 | 24,200 | 28,700 | 33,300 | 35,100 | 40,400 | 46,600 | 55,900 |
| 60" | 19,000 | 23,200 | 28,200 | 22,000 | 26,000 | 29,300 | 31,800 | 35,400 | 43,400 | 53,000 |
| 72" | 15,700 | 19,100 | 23,200 | 17,700 | 20,800 | 23,300 | 25,200 | 28,100 | 38,100 | 46,500 |
| 84" | 12,400 | 15,200 | 18,500 | 13,800 | 16,100 | 17,900 | 19,400 | 21,600 | 32,600 | 39,700 |
| 96" | 9,900 | 12,300 | 14,800 | 10,900 | 12,700 | 14,100 | 15,300 | 17,000 | 27,200 | 33,100 |
| 108" | 8,000 | 10,000 | 12,100 | 8,900 | 10,300 | 11,400 | 12,300 | 13,700 | 22,200 | 26,900 |

Consult with factory for vertical beam-to-beam spacings greater than 108"

- The Frame Capacity Chart gives allowable loads based on the specified "Unsupported Length" of the columns.
- Values shown are in full compliance with the current RMI Specifications.
- The loads on upright frames accumulate from top to bottom, therefore, the unsupported length and the column load below each beam level should be checked to determine the worst-case scenario.
- The capacities shown in this table are for static load conditions only.
- For other special conditions such as seismic or wind loadings, consult with Ridg-U-Rak sales.

*Style 32C*

*Style 33C*

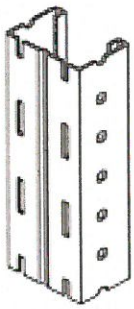

*Style 43C*

# Slotted *Beams*

Ridg-U-Rak offers many standard beam profiles in virtually any length with capacities to 22,500 lbs. per pair. Beams have a safety factor of 1.67 based on minimum yield of steel. All beam capacities are calculated based on the requirements of the current RMI specification.

All capacities are based on uniformly distributed loads on a pair of beams. Other loading conditions can greatly reduce the carrying capacity of a beam. For unusual loading requirements, call your local Ridg-U-Rak distributor.

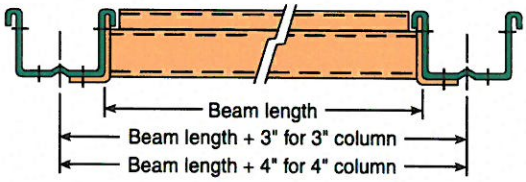


## Beam Capacities

| Beam Profile | Beam Lengths | | | | | | | | | | |
|---|---|---|---|---|---|---|---|---|---|---|---|
| | 48" | 60" | 72" | 84" | 92" | 96" | 102" | 108" | 120" | 144" | 156" |
| 250 S | 5,700 | 4,530 | 3,130 | 2,300 | 1,910 | 1,750 | 1,550 | 1,380 | 1,120 | 770 | 660 |
| 300 S | 7,500 | 5,980 | 4,820 | 3,530 | 2,940 | 2,690 | 2,380 | 2,120 | 1,720 | 1,190 | 1,010 |
| 355 S | 9,760* | 7,770 | 6,460 | 5,330 | 4,440 | 4,070 | 3,600 | 3,210 | 2,590 | 1,790 | 1,520 |
| 410 L | 10,810* | 8,620 | 7,150 | 6,110 | 5,570 | 5,200 | 4,600 | 4,100 | 3,310 | 2,290 | 1,940 |
| 410 S | 12,270* | 9,780* | 8,120 | 6,930 | 6,320 | 5,830 | 5,160 | 4,600 | 3,710 | 2,570 | 2,180 |
| 465 S | 15,020* | 11,970* | 9,940* | 8,490 | 7,740 | 7,410 | 6,960 | 6,320 | 5,110 | 3,530 | 3,000 |
| 500 S | 16,890* | 13,460* | 11,170* | 9,540* | 8,700 | 8,330 | 7,830 | 7,380 | 6,140 | 4,250 | 3,610 |
| 550 S | 19,720* | 15,710* | 13,050* | 11,150* | 10,160* | 9,720* | 9,140* | 8,620 | 7,740 | 5,420 | 4,610 |
| 600 S | 22,500* | 18,120* | 15,050* | 12,850* | 11,710* | 11,210* | 10,540* | 9,940* | 8,920 | 6,790 | 5,770 |
| 650 S | 22,500* | 20,670* | 17,160* | 14,660* | 13,360* | 12,790* | 12,020* | 11,340* | 10,180* | 8,360 | 7,110 |
| 650 R | 22,500* | 22,500* | 19,480* | 16,640* | 15,160* | 14,520* | 13,640* | 12,870* | 11,550* | 9,370* | 7,970 |

- Capacities marked with * indicate that the column connection capacity may be limited based on the hook option and/or frame model (see table below).
- Capacities listed are for non-seismic conditions. For seismic conditions consult with Ridg-U-Rak sales or engineering.
- Capacities are based on uniformly distributed loads per pair of beams.
- Capacities listed are for a 2-pallet wide condition.
- All beams over 114" in length should utilize at least one flanged, tek-screwed or lock-in cross bar located at mid length.

### Beam Profile Dimensions

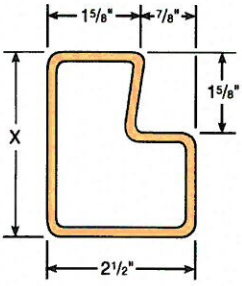


| X |
|---|
| 2.50 |
| 3.00 |
| 3.55 |
| 4.10 |
| 4.65 |
| 5.00 |
| 5.50 |
| 6.00 |
| 6.50 |

| Upright Frame Model | Maximum Beam Capacities (per pair) | |
|---|---|---|
| | 2-Lug Hook #02 | 3-Lug Hook #03 |
| UF-S | 9,000 lbs | 13,000 lbs |
| UF-R | 13,500 lbs | 16,000 lbs |
| UF-M | 12,000 lbs | 18,000 lbs |
| UF-Y | 13,000 lbs | 19,500 lbs |
| UF-H | 15,000 lbs | 22,500 lbs |

Hook # 02 is standard for beams 2.50", 3.00", 3.55", 4.10", 5.00", 5.50", 6.00" tall
Hook # 03 is standard for beams 6.50" tall

| Hook #02 | Hook #03 |
|---|---|
| 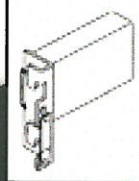 | 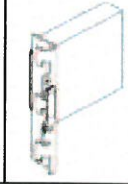 |

# Teardrop *Frames*

Teardrop systems offer easy assembly with 2" vertical beam adjustments. No tools are required. The teardrop beam-to-column connection is designed to be compatible with other widely available teardrop systems.

### Features

- Offset anchor holes
- Full array of profiles to optimize the solution
- 2" vertical adjustability
- Large base plates
- 6 bend column
- 100% welded uprights

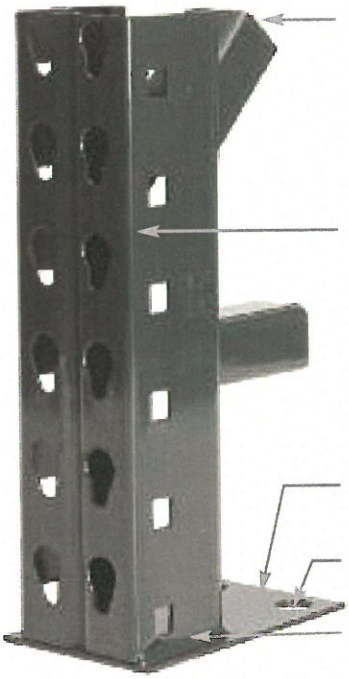


## Frame Capacities

| Vertical Beam Spacing | 31I 3 x 1-5/8 | 32I 3 x 2-1/4 | 33I 3 X 3 | | | | | 43I 4 x 3 | |
|---|---|---|---|---|---|---|---|---|---|
| | UF-S31I | UF-S32I | UF-S33I | UF-R33I | UF-M33I | UF-Y33I | UF-H33I | UF-M43I | UF-H43I |
| 36" | 19,100 | 23,500 | 28,600 | 34,100 | 38,800 | 42,100 | 47,000 | 47,900 | 62,600 |
| 42" | 17,900 | 22,100 | 26,900 | 33,100 | 35,600 | 39,500 | 43,000 | 45,700 | 60,500 |
| 48" | 16,700 | 20,600 | 25,100 | 29,800 | 33,800 | 36,600 | 40,900 | 44,500 | 58,100 |
| 54" | 15,200 | 18,900 | 23,100 | 27,500 | 31,900 | 33,600 | 38,600 | 43,100 | 55,300 |
| 60" | 13,800 | 17,200 | 21,100 | 25,000 | 28,100 | 30,400 | 33,900 | 40,200 | 52,400 |
| 72" | 10,800 | 13,700 | 17,000 | 20,000 | 22,300 | 24,100 | 26,800 | 35,300 | 46,000 |
| 84" | 8,200 | 10,600 | 13,200 | 15,400 | 17,200 | 18,600 | 20,700 | 30,200 | 39,300 |
| 96" | 6,500 | 8,400 | 10,500 | 12,200 | 13,500 | 14,700 | 16,300 | 25,200 | 32,800 |
| 108" | 5,200 | 6,800 | 8,500 | 9,900 | 10,900 | 11,800 | 13,100 | 20,500 | 26,600 |

Consult with factory for vertical beam-to-beam spacings greater than 108"

- The Frame Capacity Chart gives allowable loads based on the specified "Unsupported Length" of the columns.
- Values shown are in full compliance with the current RMI Specifications.
- The loads on upright frames accumulate from top to bottom, therefore, the unsupported length and the column load below each beam level should be checked to determine the worst-case scenario.
- The capacities shown in this table are for static load conditions only.
- For other special conditions such as seismic or wind loadings, consult with Ridg-U-Rak sales.

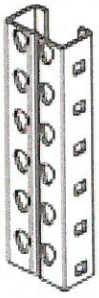
*Style 31I*

*Style 32I*

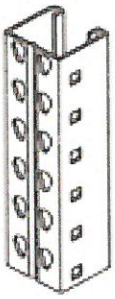
*Style 33I*

*Style 43I*

# Teardrop *Beams*

Interchangeable teardrop beams, as with slotted beams, are available in many profiles, in virtually any length, with capacities to 18,000 lbs. per pair. You can tie into many existing systems both old and new. Beams have a safety factor of 1.67 based on minimum yield of steel. All beam capacities are calculated based on the requirements of the current RMI specification.

Our teardrop pallet system provides a robust, patented, automatic lock for improved safety. The Springlock assembly provides positive beam-to-column engagement, improving installation speed and safety.

All capacities are based on uniformly distributed loads on a pair of beams. Other loading conditions can greatly reduce the carrying capacity of a beam. For unusual loading requirements, call your local Ridg-U-Rak distributor.

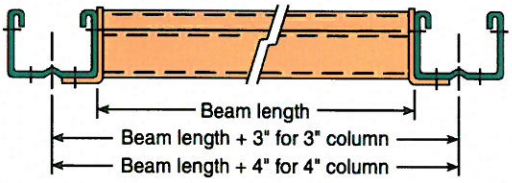


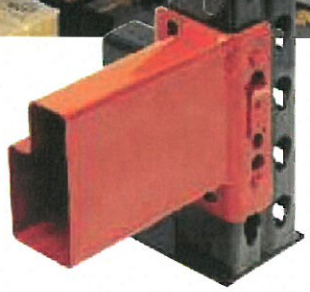

## Beam Capacities

| Beam Profile | Beam Lengths | | | | | | | | | | |
|---|---|---|---|---|---|---|---|---|---|---|---|
| | 48" | 60" | 72" | 84" | 92" | 96" | 102" | 108" | 120" | 144" | 156" |
| 250 S | 5,700 | 4,530 | 3,130 | 2,300 | 1,910 | 1,750 | 1,550 | 1,380 | 1,120 | 770 | 660 |
| 300 S | 7,500 | 5,980 | 4,820 | 3,530 | 2,940 | 2,690 | 2,380 | 2,120 | 1,720 | 1,190 | 1,010 |
| 355 S | 9,760 | 7,770 | 6,460 | 5,330 | 4,440 | 4,070 | 3,600 | 3,210 | 2,590 | 1,790 | 1,520 |
| 410 L | 10,810 | 8,620 | 7,150 | 6,110 | 5,570 | 5,200 | 4,600 | 4,100 | 3,310 | 2,290 | 1,940 |
| 410 S | 12,000 | 9,780 | 8,120 | 6,930 | 6,320 | 5,830 | 5,160 | 4,600 | 3,710 | 2,570 | 2,180 |
| 465 S | 12,000 | 11,970 | 9,940 | 8,490 | 7,740 | 7,410 | 6,960 | 6,320 | 5,110 | 3,530 | 3,000 |
| 500 S | 12,000 | 12,000 | 11,170 | 9,540 | 8,700 | 8,330 | 7,830 | 7,380 | 6,140 | 4,250 | 3,610 |
| 550 S | 18,000 | 18,000 | 18,000 | 11,150 | 10,160 | 9,720 | 9,140 | 8,620 | 7,740 | 5,420 | 4,610 |
| 600 S | 18,000 | 18,000 | 18,000 | 12,850 | 11,710 | 11,210 | 10,540 | 9,940 | 8,920 | 6,790 | 5,770 |
| 650 S | 18,000 | 18,000 | 18,000 | 14,660 | 13,360 | 12,790 | 12,020 | 11,340 | 10,180 | 8,360 | 7,110 |
| 650 R | 18,000 | 18,000 | 18,000 | 18,000 | 15,160 | 14,520 | 13,640 | 12,870 | 11,550 | 9,370 | 7,970 |

- Capacities are based on uniformly distributed loads per pair of beams.
- Capacities listed are for non-seismic conditions. For seismic conditions consult with Ridg-U-Rak sales or engineering.
- Capacities listed are for a 2-pallet wide condition.
- All beams over 114" in length should utilize at least (1) flanged, tek-screwed or lock-in cross bar located at mid length.
- Maximum shelf load for Teardrop Beams using 6" connectors with 2-pins is 12,000# per pair.
- Maximum shelf load for Teardrop Beams using 8" connectors with 3-pins is 18,000# per pair.

### Beam Profile Dimensions

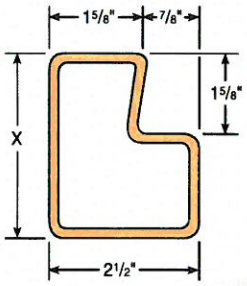


| X |
|---|
| 2.50 |
| 3.00 |
| 3.55 |
| 4.10 |
| 4.65 |
| 5.00 |
| 5.50 |
| 6.00 |
| 6.50 |

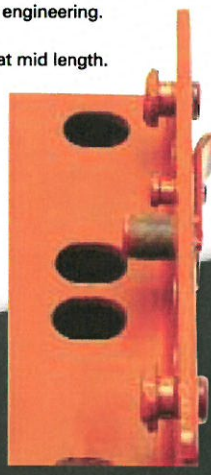

Enhanced robust automatic lock

# Structural *Frames & Beams*

## *Slotted Connections*

### Upright frames

- Upright frame capacities vary according to vertical beam spacing. See chart.
- Upright columns are hot-rolled structural channel with 50,000 psi minimum yield.
- Upright frames have a safety factor of 1.92 based on minimum yield of steel.
- Slotted beams are vertically adjustable on 4" centers.
- Standard colors:
  Uprights – forest green
  Beams – safety orange
  Other colors available on special order.
- Front column foot protector is optional.
- Heavy duty lower horizontal brace is optional.

### Frame capacity chart

| Vertical Beam Spacing | SSF-335 |
|---|---|
| 36" | 34,200 |
| 48" | 33,300 |
| 60" | 30,000 |
| 72" | 24,000 |
| 84" | 18,400 |
| 96" | 14,200 |
| 108" | 11,300 |

### Beam length

*column center line determination*

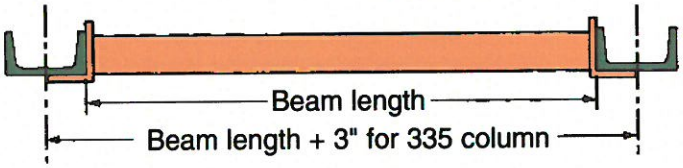


### Beam capacities - *Slotted Connection*

| Beam Length | 335 (3") | | 341 (3") | | 445 (4") | | 567 (5") | | 682 (6") | |
|---|---|---|---|---|---|---|---|---|---|---|
| | Un-braced Cap/pr | Braced Cap/pr | Un-braced Cap/pr | Braced Cap/pr | Un-braced Cap/pr | Braced Cap/pr | Un-braced Cap/pr | Braced Cap/pr | Un-braced Cap/pr | Braced Cap/pr |
| 48" | 10,880 | 11,160 | 12,290 | 12,290 | 18,510 | 18,910 | | | | |
| 54" | 9,350 | 9,920 | 10,640 | 10,930 | 15,860 | 16,810 | | | | |
| 72" | 6,280 | 7,210 | 7,330 | 7,930 | 10,550 | 12,610 | 18,810 | | | |
| 84" | 4,970 | 5,300 | 5,830 | 5,830 | 8,060 | 10,810 | 14,840 | 18,960 | | |
| 92" | 4,140 | 4,420 | 4,860 | 4,860 | 6,650 | 9,870 | 12,330 | 17,310 | | |
| 96" | 3,800 | 4,060 | 4,460 | 4,460 | 6,080 | 9,320 | 11,280 | 16,590 | | |
| 102" | 3,360 | 3,600 | 3,950 | 3,950 | 5,350 | 8,260 | 9,940 | 15,620 | 14,130 | |
| 108" | 2,990 | 3,210 | 3,530 | 3,530 | 4,750 | 7,370 | 8,830 | 14,750 | 12,520 | |
| 120" | 2,420 | 2,600 | 2,860 | 2,860 | 3,820 | 5,970 | 7,100 | 12,880 | 10,030 | |
| 132" | 2,000 | 2,150 | 2,360 | 2,360 | 3,140 | 4,930 | 5,840 | 10,640 | 8,220 | 17,640 |
| 144" | 1,670 | 1,810 | 1,990 | 1,990 | 2,630 | 4,150 | 4,880 | 8,940 | 6,870 | 15,640 |
| 156" | 1,430 | 1,540 | 1,690 | 1,690 | 2,230 | 3,530 | 4,150 | 7,620 | 5,820 | 13,330 |
| 180" | 1,070 | 1,160 | 1,270 | 1,270 | 1,670 | 2,660 | 3,100 | 5,730 | 4,340 | 10,010 |

**Note:** Beams must be secured by beam locks against accidental upward forces.
All capacities are per pair of beams based on uniformly distributed loads.
Capacities are based on current RMI specifications.

# Structural *Frames & Beams*

## *Bolted Connections*

### Upright frames

- Upright frame capacities vary according to vertical beam spacing. See chart.
- Upright columns are hot-rolled structural channel with 50,000 psi minimum yield.
- Upright frames have a safety factor of 1.92 based on minimum yield of steel.
- Bolted beams are vertically adjustable on 2" centers.
- Standard colors:
  Uprights – forest green
  Beams – safety orange
  Other colors available on special order.
- Front column foot protector is optional.
- Heavy duty lower horizontal brace is optional.

### Frame capacity chart

| Vertical Beam Spacing | SBF-335 | SBF-341 | SBF-445 |
|---|---|---|---|
| 36" | 34,200 | 40,300 | 51,600 |
| 48" | 33,300 | 39,200 | 50,600 |
| 60" | 30,000 | 35,000 | 50,000 |
| 72" | 24,000 | 27,600 | 44,500 |
| 84" | 18,400 | 21,000 | 38,600 |
| 96" | 14,200 | 16,100 | 32,600 |
| 108" | 11,300 | 12,800 | 26,800 |

### Beam length

*column center line determination*

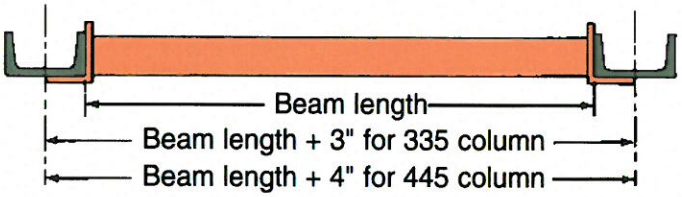


### Beam capacities - *Bolted Connection*

| | 335 | | 341 | | 445 | | 567 | | 682 | |
|---|---|---|---|---|---|---|---|---|---|---|
| | 3" | | 3" | | 4" | | 5" | | 6" | |
| Beam Length | Un-braced Cap/pr | Braced Cap/pr | Un-braced Cap/pr | Braced Cap/pr | Un-braced Cap/pr | Braced Cap/pr | Un-braced Cap/pr | Braced Cap/pr | Un-braced Cap/pr | Braced Cap/pr |
| 48" | 10,880 | 11,160 | 12,290 | 12,290 | 18,510 | 18,910 | | | | |
| 54" | 9,350 | 9,920 | 10,640 | 10,930 | 15,860 | 16,810 | | | | |
| 72" | 6,280 | 7,210 | 7,330 | 7,930 | 10,550 | 12,610 | 18,810 | | | |
| 84" | 4,970 | 5,300 | 5,830 | 5,830 | 8,060 | 10,810 | 14,840 | 18,960 | | |
| 92" | 4,140 | 4,420 | 4,860 | 4,860 | 6,650 | 9,870 | 12,330 | 17,310 | | |
| 96" | 3,800 | 4,060 | 4,460 | 4,460 | 6,080 | 9,320 | 11,280 | 16,590 | | |
| 102" | 3,360 | 3,600 | 3,950 | 3,950 | 5,350 | 8,260 | 9,940 | 15,620 | 14,130 | |
| 108" | 2,990 | 3,210 | 3,530 | 3,530 | 4,750 | 7,370 | 8,830 | 14,750 | 12,520 | |
| 120" | 2,420 | 2,600 | 2,860 | 2,860 | 3,820 | 5,970 | 7,100 | 12,880 | 10,030 | |
| 132" | 2,000 | 2,150 | 2,360 | 2,360 | 3,140 | 4,930 | 5,840 | 10,640 | 8,220 | 17,640 |
| 144" | 1,670 | 1,810 | 1,990 | 1,990 | 2,630 | 4,150 | 4,880 | 8,940 | 6,870 | 15,640 |
| 156" | 1,430 | 1,540 | 1,690 | 1,690 | 2,230 | 3,530 | 4,150 | 7,620 | 5,820 | 13,330 |
| 180" | 1,070 | 1,160 | 1,270 | 1,270 | 1,670 | 2,660 | 3,100 | 5,730 | 4,340 | 10,010 |

**Note:** All capacities are per pair of beams based on uniformly distributed loads. Capacities are based on current RMI specifications.

# Frame Options

**Full Depth Base Channel**

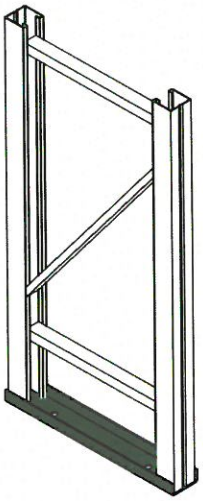

**Welded Angle Deflector**

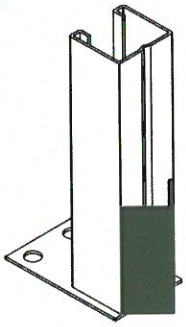

**Floor Pad Options**

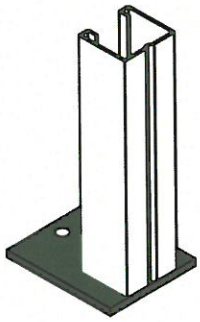

**Welded Wrap-Around Deflector**

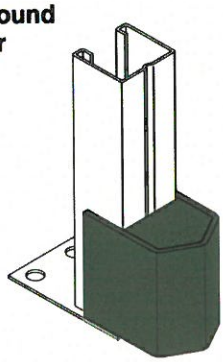

**Single Heavy Duty Bottom Horizontal**

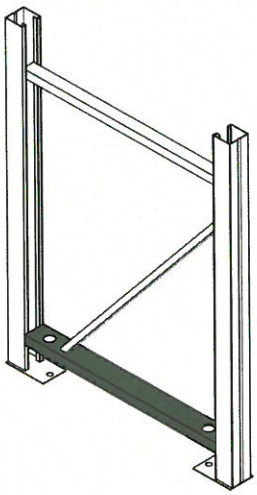

**Welded Wrap-Around Deflector Front Anchor**

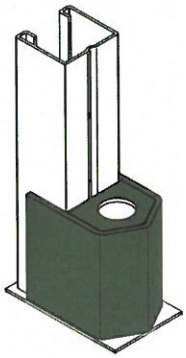

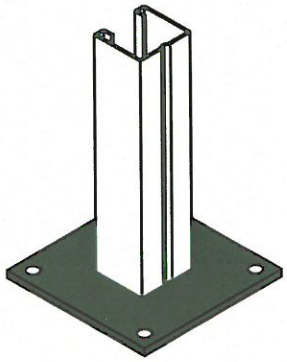

**Double Heavy Duty Bottom Horizontal**

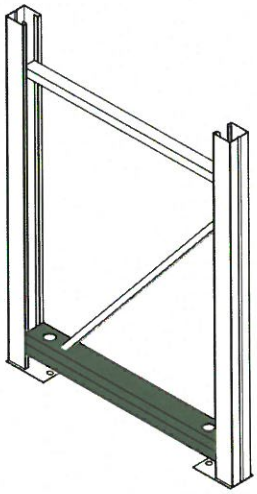

**Welded Wrap-Around Deflector Front Anchor & Heavy Horizontal**

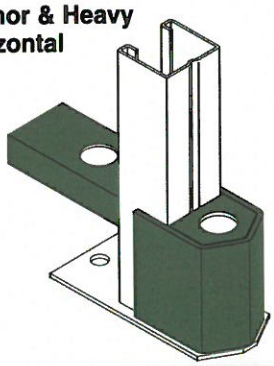

**Slant-back Frames**

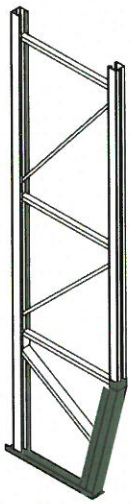

**Offset Frames**

# Beam Options

**Bolted Beam Connection**

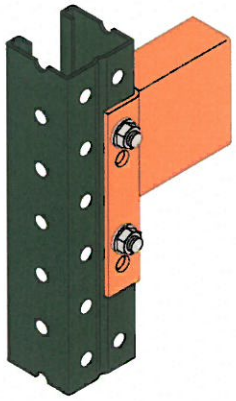

**Beam Step Punching**
**For "Tabbed" and "Drop-in" Cross Bars**

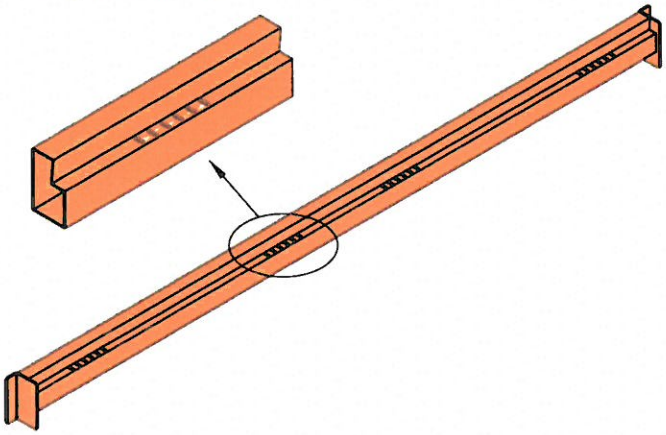

**Teardrop Beam Connection**

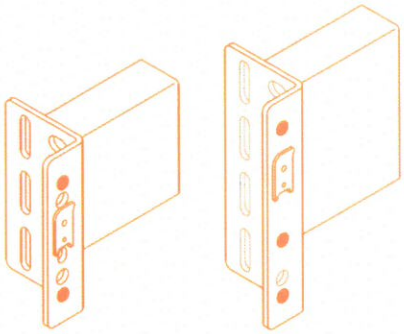

2 Pin 3 Pin

**Pallet Stops Factory Welded to Beam**

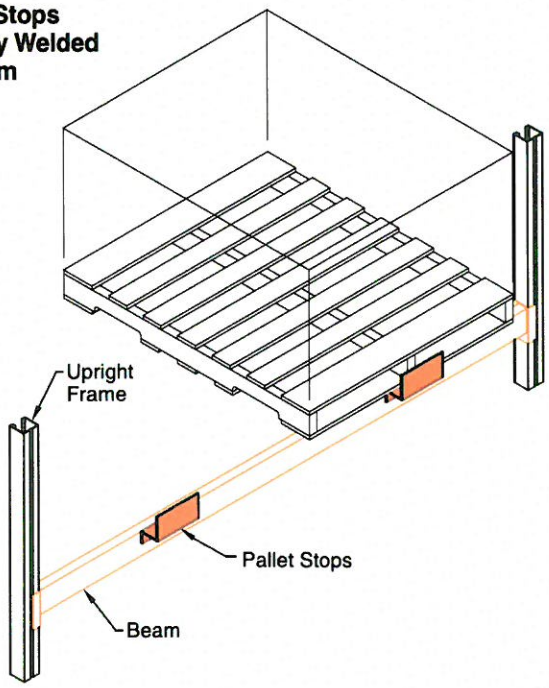

**Slant-back Frame Option**

# Column Sentry II

## *Rack Abuse*

Accidental lift truck impact damage is inevitable, but unique Column Sentry II reinforcing keeps it to an absolute minimum.

Ridg-U-Rak's Column Sentry II reinforcing is a double-thick, double-strength box section that provides exceptional resistance to impact damage of frame columns.

Column Sentry II reinforcing helps guard against rack failure, collapse, and local buckling; and, at the same time, it increases column load carrying strength.

And that's not all. Column Sentry II reinforcing is compact, thereby, saving critical aisle space. No more space is required than our standard column, and it need be applied only in critical areas such as floor to first beam level on front columns (aisle side).

No other reinforcing method offers the protection, strength, and economy of Column Sentry II.

Column Sentry II
32C 3 x 2-1/4

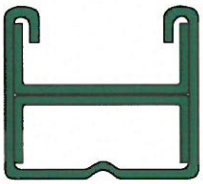

Column Sentry II
33C 33 I
43C 43 I

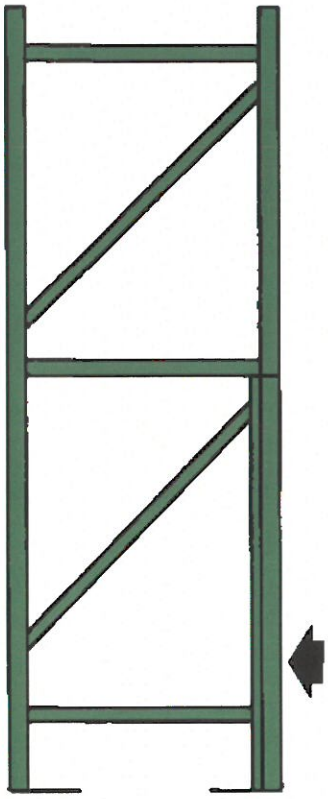

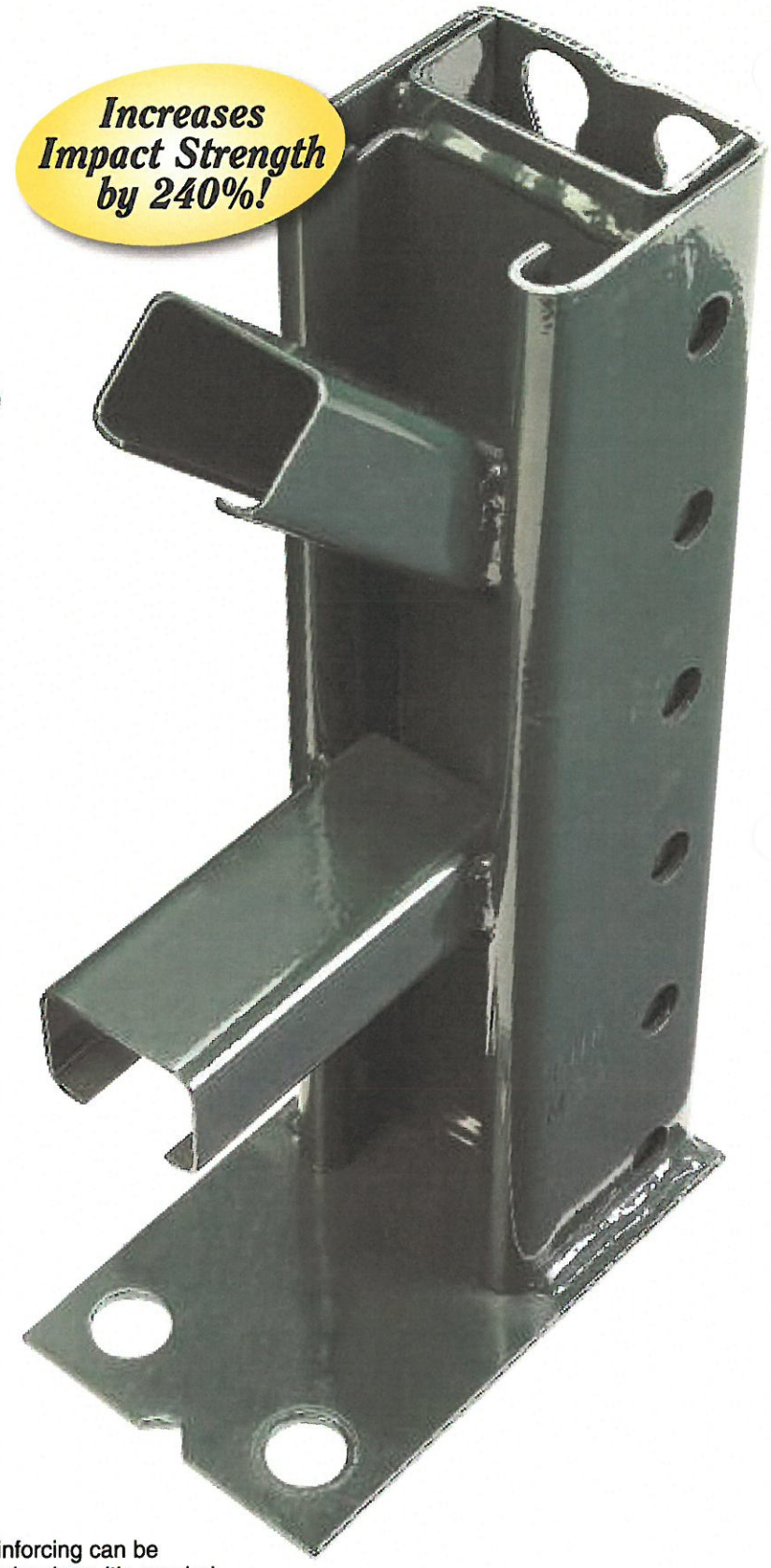


Column Sentry II reinforcing can be applied cost-effectively where it's needed most – such as lower leg of front upright column. No need for heavy, inflexible, expensive structural components in areas where damage is unlikely to occur.

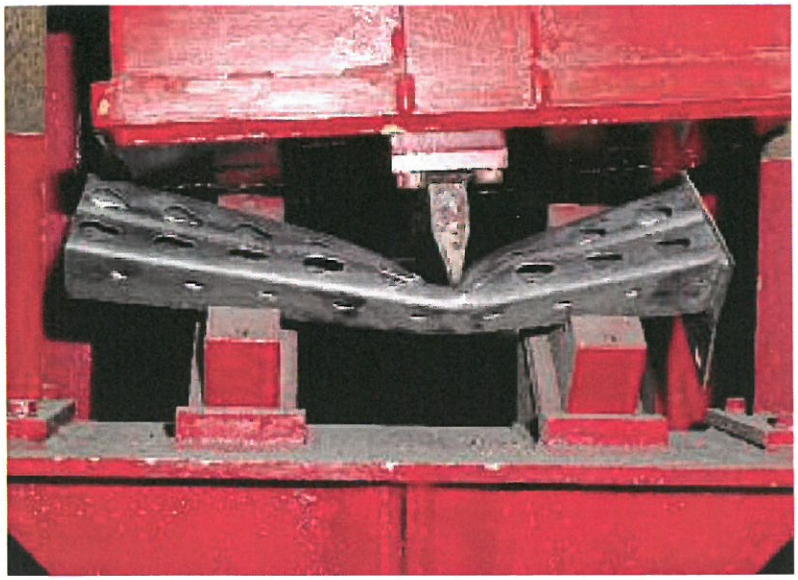

**Test of Unreinforced Columns**

## *Resistance to Impact*

Adding Ridg-U-Rak's Column Sentry II reinforcing results in a composite column section that increases column strength by as much as 240%; as well as increasing torsional resistance several hundred times. This results in an upright frame that is extremely resilient, impact resistant, economical and most importantly, provides *tremendous residual carrying capacity after an impact occurs!*

## Guillotine Impact Testing best simulates the impact of a lift-truck fork.

Measuring *Impact Resistance* offers the most accurate assessment of how a column will respond when subjected to "typical abuse" in warehousing environments. Other tests, such as Load Tests, only measure the ability of a column as it relates to capacities.

## Upright column strength comparison after equal impact

Laboratory tests were conducted to determine the axial load carrying capability of different column sections after an equal impact load was applied. After impact, each column section was placed in a testing machine where controlled compressive force was applied. The deflection was measured and recorded at increasing load increments and then plotted logically.

***Note: See the Poor Impact Performance of the Tube Columns.***

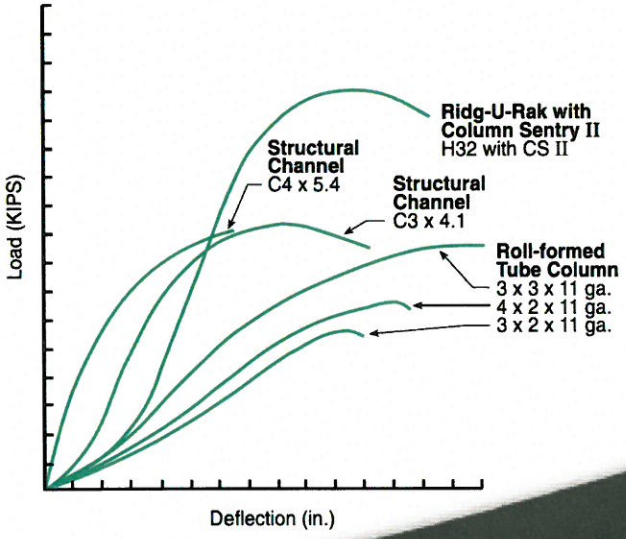

## Column Sentry II

Column Sentry II provides maximum protection against lift truck impact damage.

# Accessories

## *Slotted & Teardrop*

**Row Spacer**

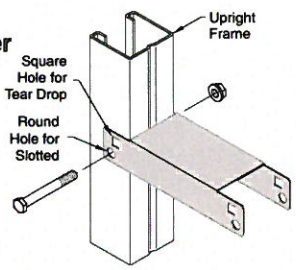


**Row-to-wall Spacer**

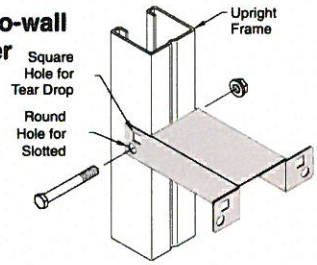


**Flanged Crossbar (CBF)**

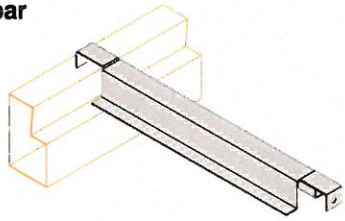

**Straight Crossbar (CBN)**

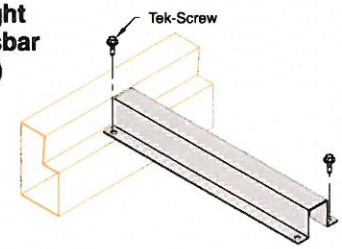


**Tabbed Crossbar (CBU)**

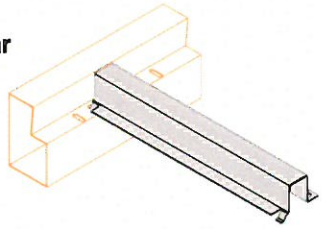

**Low Profile Drop In Crossbar (CBW)**

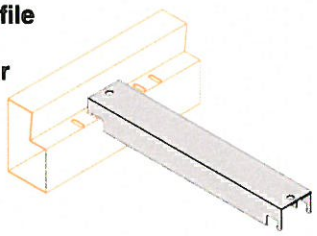

**Low Profile Straight Crossbar (CBL)**

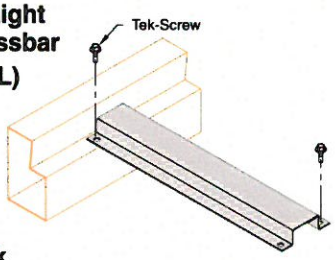


**Fork Entry**

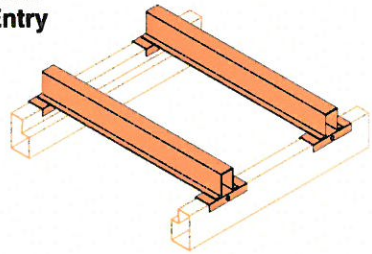

**Skid Rails**

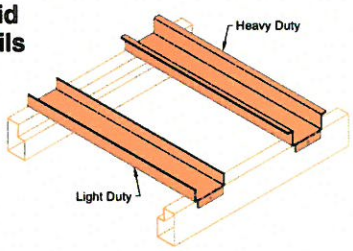


**Metal Deck**

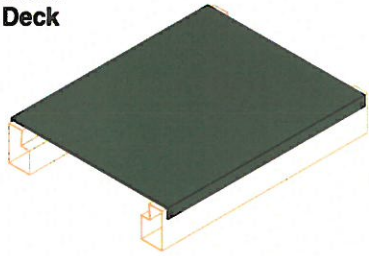

**Column Guards**

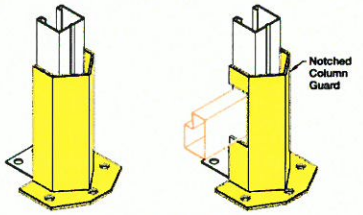


**Floor Mounted**

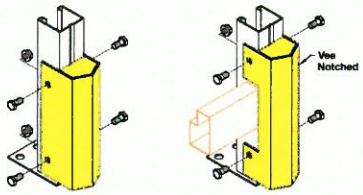


**Column Mounted**

**Catwalk Support**

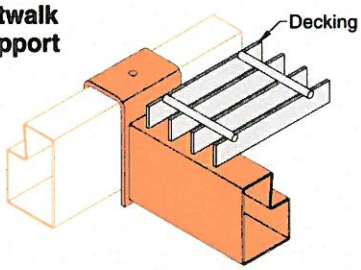


**Aisle Bridging**

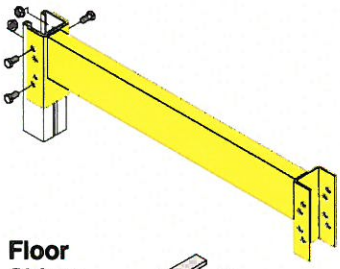

**Floor Shims**

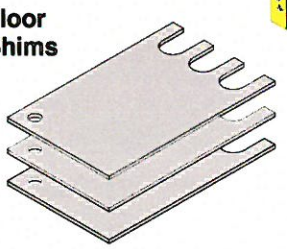

**Bolted Load Stops**

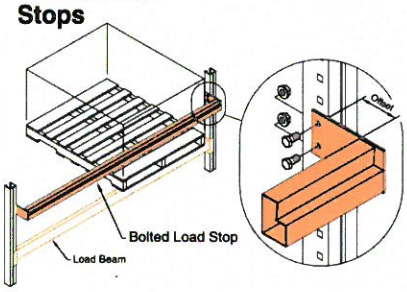


**Manual Locking Devices**

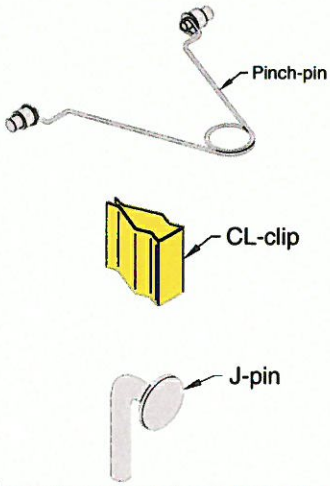

# Accessories

## *Structural*

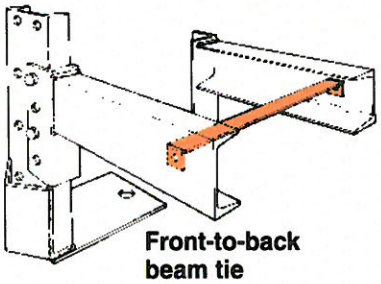

Front-to-back beam tie

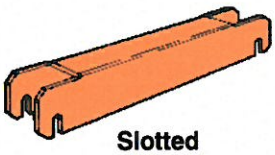

Slotted row spacer

Slotted beam lock

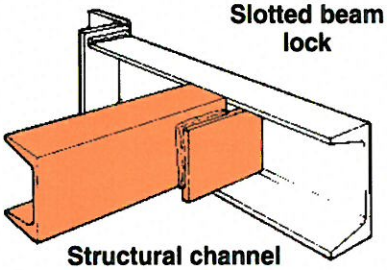

Structural channel pallet support

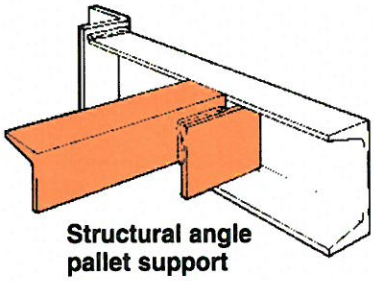

Structural angle pallet support

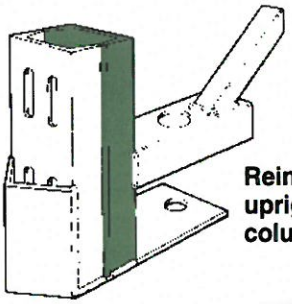

Reinforced upright column

**Slotted beams** | **Bolted beams**

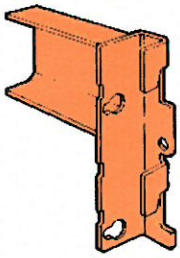

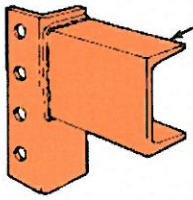

**Standard**
Standard beam position
(Use part number designation - B)

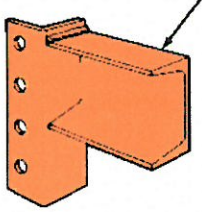

**Alternate**
Alternate beam position
(Use part number designation - A)

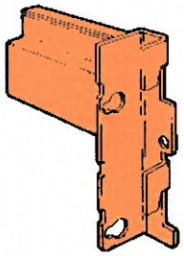

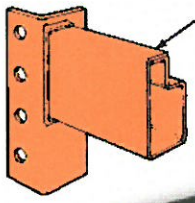

**Roll-formed**
Roll-formed beam also available for either connection style.

# Quality Manufacturing

**Roll Form Manufacturing**
State-of-the-Art high volume roll form operation using induction welding process for closed tube beams.

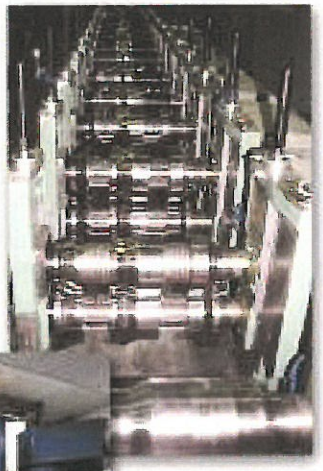

**AWS Certified Welders**
The quality of the workmanship performed on a rack system directly relates to that rack's durability and safe usage. Ridg-U-Rak uses AWS certified welders to ensure the manufacturing of reliable products.

**State-of-the-Art Powder Coat Paint Systems**
Racks built to last require a durable finish. Our powder coated paint finish has superior impact resistance and is applied by our state-of-the-art automated paint line for uniform quality. Additionally, hard-to-access areas are hand sprayed to ensure coverage. Ridg-U-Rak systems resist chips and scratches, providing a long-lasting finish for better appearance and reduced maintenance.

**Certified Fabrication**
Through an audit and approval process of our quality system, Ridg-U-Rak is a licensed and certified manufacturer in a number of municipalities around the United States.

---


***For more information,***
*please contact us:*
*120 South Lake Street*
*North East, PA 16428*
***Toll Free:*** ***866-479-7225***
***Phone:*** ***814-725-8751***
***Fax:*** ***814-725-5659***

***www.ridgurak.com***


*RIDG-U-RAK is a founding member in good standing of RMI. The Storage Rack covered by this manual is in full compliance with the latest design specification approved by the members of the RACK MANUFACTURERS INSTITUTE. We believe that it is important to you that your supplier be committed to the principles of continuous improvement in both product design/application, and in the highest professional and ethical standards of performance as embodied in the mission and work conducted within RMI.*

***Proud member of these organizations:***

RIDG-U-RAK® STORAGE SYSTEMS

*Famous for integrity for over 70 years*



©2012 RIDG-U-RAK

PAPERSYSTEMS

# The 48 x 40 "EZ-Set" 275 Gallon Recyclable Liquid Bulk Container

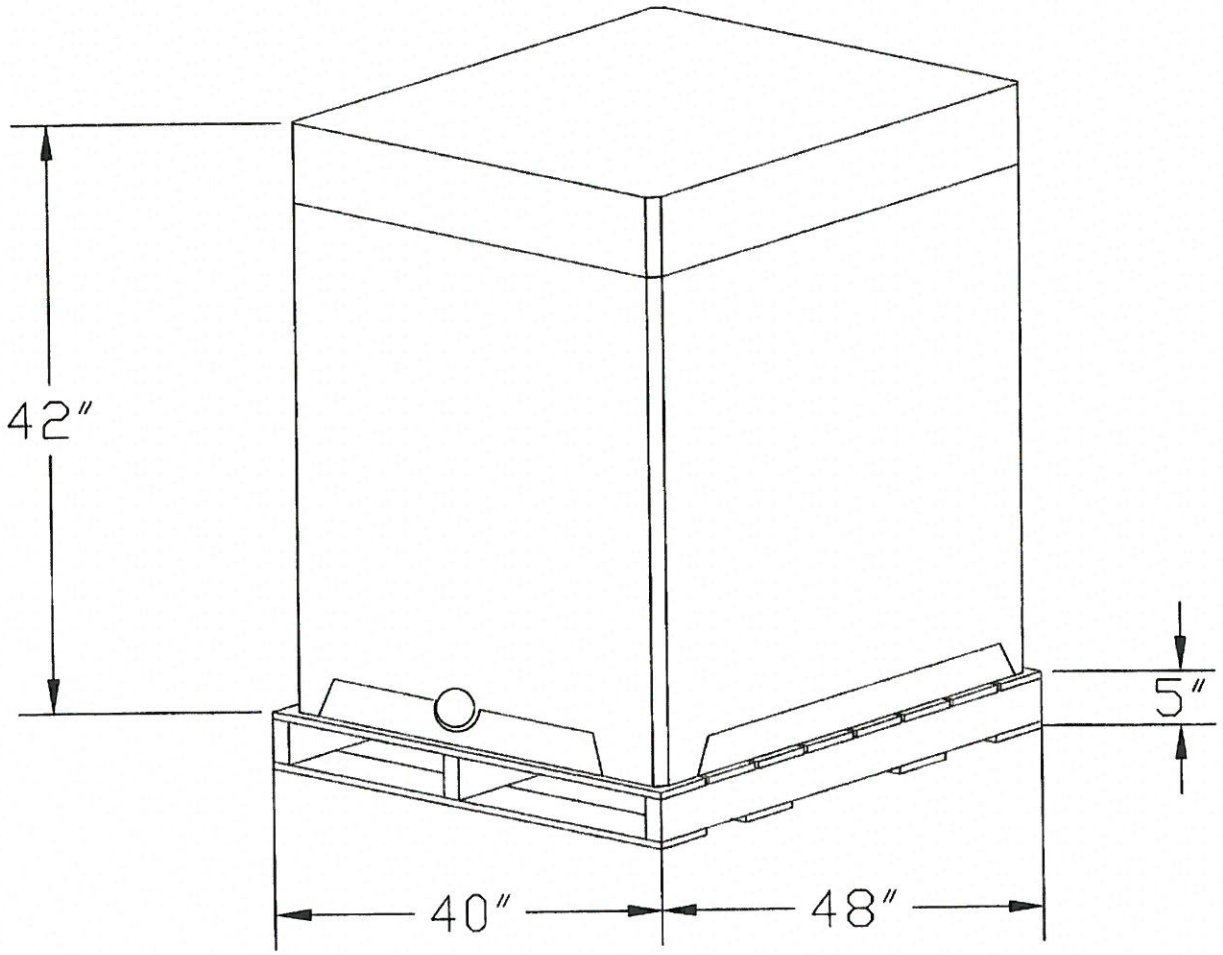


6127 Willowmere Dr. Des Moines, IA 50321
800-342-2855 515-280-1111 515-280-9219 (Fax)
www.paper-systems.com

# EZ-SET 48x40 Series

- FITS 48 X 40 PALLET
- ECONOMICAL
- 275 GALLON
- STACKS THREE HIGH WHEN FILLED
- EASY ASSEMBLY
- 100% RECYCLABLE
- FOOD GRADE & ASEPTIC BAG LINERS AVAILABLE
- ALL LINERS ARE DAIRY & KOSHER CERTIFIED
- EZ-SET CAN BE SHIPPED ASSEMBLED OR KNOCKED DOWN

**CALL TODAY & SAVE**

**(800) 342-2855**

PAPERSYSTEMS

**WWW.PAPER-SYSTEMS.COM**

6127 Willowmere Dr. Des Moines, IA 50321

275 gallon EZ-SET 48x40 container system fits on a 48 x 40 pallet. Containers arrive stretch wrapped and flat on skids minimizing warehouse space (up to 80% less than drums). Unit can be stacked three high in a warehouse environment.

## Assembly

Take EZ-SET 48x40 body and position squarely onto pallet.

Check all four sides of the container to insure box is centered.

## Bag liner

EZ-SET 48x40 comes with a multi layer inner bag liner. All liners are made from FDA approved materials, USDA, food grade, Kosher approve and IMS Dairy certified. Specialty barrier films to meet specific requirements are available.

Filling accomplished through at 2" NPT fitment located at the top center of the liner. The bottom evacuation fitment is located on the side of the liner to be positioned through the evacuation hole of the EZ-SET 48x40 body.

## Filling

Take the cassette from the skid stack

Unscrew the filling plug and drop the cassette into the assembled body making sure to hold onto the filling plug.

Attach filling hose and quick connect fitments as needed.

Place liner in assembled EZ-SET 48x40 body so that the bottom drain aligns with the evacuation hold on the bottom side of the body.

Allow 10 gallons to enter liner and then square up bottom of bag liner by gently lifting four corners of the liner so all four corners are squared out against the side walls. Fill the bag to the top of the body side walls.

Disconnect filling line and adapter if used. Remove any air from liner by pressing down on the top of the liner. Screw in the filling plug until gasket contact, then go another ¼ turn.

## Pallet

Pallet size 48 x 40 is critical to overall container performance. Standard two-way pallet should meet the following minimum specifications:

Three 2" x 4" standard hardwood or softwood stringers

Ten 1" x 6" deck boards (seven top boards and three bottom boards)

2 1/2" spiral nails

## Shipping

Put corrugated lid on box.

Strap box tightly to pallet with two straps in each direction as printed on lid. Strap spec: .022 ¾" steel or equivalent

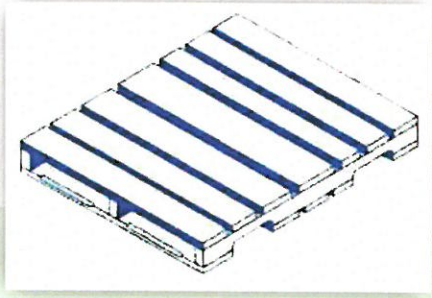

PAPERSYSTEMS

6127 Willowmere Drive, Des Moines, Iowa 50321 USA
Ph. 1-515-280-1111 Fax 1-515-280-9219 www.paper-systems.com

US Patent Applied For All Other Rights Reserved

# PaperIBC 275G

**The PaperIBC comes complete and ready to fill with; the container body, a Guardian form-fit liner in a cassette with all necessary fitments and a lid for the container.**

## PaperIBC 275G Body Specifications:

- Capacity: 275 gallon / 1041 liters
- Outer dimensions: 43" X 43" X 41"
- Wall Thickness: 9 ply corrugated, 1-3/4" thick
- Net weight: 66 lbs – pallet not included

## Guardian Cassetted Form Fit liner Specifications:

- Capacity: 275 gallon / 1041 liters
- Dimensions: 41" X 41" X 42"
- Construction: 3 plys of 3.2mil type 43 coextruded low density polyethylene attached to a fitted corrugated cassette.
- Attachments: 2" BSP threaded fill fitment with protective cap and 2" BSP threaded dispense fitment with crown cutter, protective cap and locking ring.

## Accessories and Tools:

Part #452005
2" ball valve with
2" threaded connector

Part #452004
2" cam-lock quick
connect fitment

Part #452006
Optional
polyethylene cover

Part #452003
Dispense fitment
locking ring tool

Part #452002
Fill bridge
squaring tool

Various fitments and
valves are available

1-800-635-1551 Grayling™ INDUSTRIES Graylingindustries.com

1008 Branch Drive • Alpharetta, Georgia 30004

# PaperIBC Pallet and Strapping Recommendations

## PaperIBC 275G

### Pallet Recommendation:

(not included with container)

- Top Deckboard – 7 ea. 44" X 4" X 5/8"
- Bottom Deckboard – 3 ea. 44" X 4" X 5/8"
- Runners – 4 ea. 44" X 1-1/2" X 2-3/8"

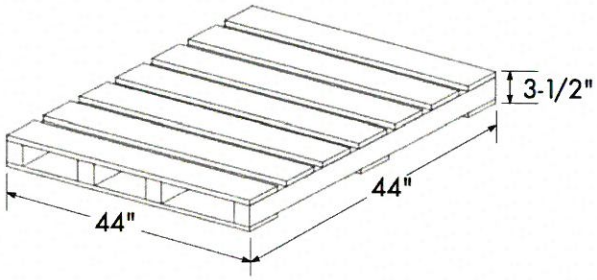


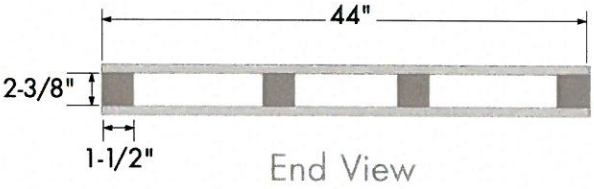


End View

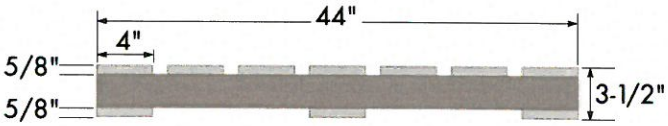


Side View

### Strapping Recommendation: (not included with container)

Polyester or nylon strapping 5/8" wide X 25mm thick.

Band the container to the pallet with four straps, using the guide provided on the lid.

1-800-635-1551 Grayling™ INDUSTRIES Graylingindustries.com

1008 Branch Drive • Alpharetta, Georgia 30004

# PaperIBC for bulk liquid storage and transportation:

## Dependable, Economical and Environmentally Responsible

The PaperIBC container from Grayling Industries is a dependable, economical and environmentally responsible alternative to drums, bottle-in-cage and other "heavy footprint" types of intermediate bulk containers.

### Dependable:

The heart of the PaperIBC system is the Guardian form fit liner manufactured by Grayling Industries. Grayling is a leading manufacturer of IBC liners for industrial processors of bulk materials and of critical use containment products for the hazard remediation industry both of which require 100% product performance.

Guardian liners are manufactured in an ultra clean environment and are constructed of FDA approved materials in our IMS certified manufacturing facility.

The PaperIBC container has passed the stringent ISTA (International Safe Transit Association) vibration and shock tests and has met the NMFTA (National Motor Freight Traffic Association) requirements for intermediate bulk containers for liquids. The heavy duty nine ply PaperIBC container is capable of withstanding up to 10,000 lbs of compression force.

### Economical:

Unlike 55 gallon drums and other IBCs, there are no cleaning expenses or return freight costs associated with the PaperIBC and there is significantly less storage space required to inventory the containers and less freight expense to initially receive the containers.

- 80% less storage space is required for unassembled PaperIBCs
- No cleaning or disposal costs and no return freight expense is incurred using PaperIBCs.

### Environmentally Responsible:

The PaperIBC is constructed of a renewable resource and is completely recyclable. The container is a "one-way" package, so there are no fossil fuels consumed to return the package after dispense and there is no landfill space consumed either as the container is:

- Biodegradable
- Recyclable and
- Waste-to-energy efficient.

1-800-635-1551 Grayling™ an ILC Dover Company Graylingindustries.com

1008 Branch Drive • Alpharetta, Georgia 30004

# PaperIBC for bulk liquid storage and transportation:

## Dependable, Economical and Environmentally Responsible

## 80% less Space Required:

The PaperIBC requires 80% less space for storage and shipping than other non-collapsible IBCs.

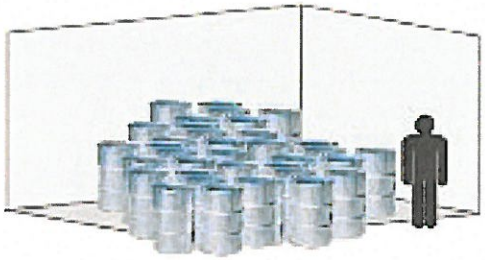

### 48 Drums

**48 empty 55 gallon drums that will hold 2,640 gallons of product = 12 pallet positions or 192 square feet**

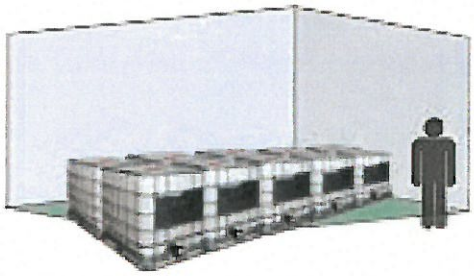

### 10 Bottle-in-Cage

**10 empty bottle-in-cage totes that can hold 2,750 gallons of product = 10 pallet positions or 125 square feet**

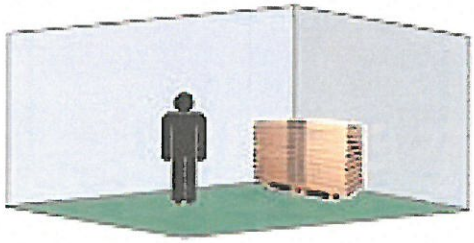

### 10 PaperIBCs

**10 empty PaperIBCs that can package 2,650 gallons of product = 1 pallet position or 32 square feet**

## Additional Security Provided:

In addition to the strength and durability features of the container, the PaperIBC also features a unique dispense fitment "locking ring" that protects the fitment and liner and insures that the fitment stays secure in the correct position during the rigors of shipping and handling.

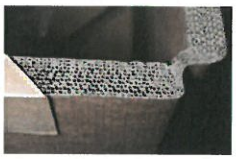

Also for additional security, the corrugated flutes of the container are covered to insure that the container is hygienic and contaminant free.

1-800-635-1551 Grayling™ an ILC Dover Company Graylingindustries.com

1008 Branch Drive • Alpharetta, Georgia 30004

PaperIBC™

# PaperIBC for bulk liquid storage and transportation:

Dependable, Economical and Environmentally Responsible

## PaperIBC Assembly and Use Instructions

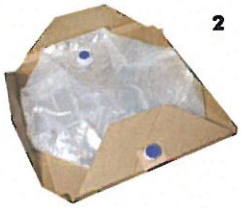

### Assembly:

1. Position the Paper IBC body on the pallet, open and center the box on the pallet using the Squaring Tool. Leave the Squaring Tool in place and position the Filling Bridge attachment nearby for future use.
2. Open the cassetted liner package and remove the protective wrap on both the fill and dispense fitments. Remove the locking ring and place aside for use later. Remove the protective cap from the dispense fitment. Fully extend, and even hyper extend, the flap on the cassette where the dispense fitment is secured. (this will help in positioning the dispense fitment with the dispense port on the IBC body)
3. While holding on to the filling fitment, carefully lower the cassetted liner into the IBC, taking care that the dispense fitment will be aligned on the correct sidewall of the IBC once the cassette is fully opened.
4. Fit the Filling Bridge attachment onto the Squaring Tool. Insert fill fitment into Filling Bridge receptacle and secure locking device.
5. The dispense fitment should be accessible through the dispense port. Reach through the dispense port and, with your fingers inside the fitment, pull the dispense fitment snugly into the port. Insert the locking ring into the port and begin threading the ring onto the dispense fitment. Finish tightening the ring with the locking ring tightening tool until the white portion of the dispense fitment protrudes slightly and then thread the protective cap back onto the dispense fitment.
6. The package is now ready for filling.

### Shipment or Storage:

1. Once the package has been filled, replace the protective cap on the filling fitment. Disengage the filling fitment from the filling bridge and remove the bridge.
2. If extra protection from the elements is required, cover the IBC with the optional polyethylene protective shroud.
3. Assemble the lid and fit onto the container.
4. Band the container to the pallet with four straps, using the guide provided on the lid.
5. The Paper IBC is now ready for shipment or storage.

### Dispensing:

To dispense product from the container, no venting is required, simply:

a. remove the protective cap from the dispense fitment,

b. separate the crown cutter from the cap,

c. reinsert the cutter with the serrated edges facing towards the liner

d. and thread the 2" ball valve into the dispense fitment

1-800-635-1551 Grayling™ an ILC Dover Company Graylingindustries.com

1008 Branch Drive • Alpharetta, Georgia 30004

# VALU-LINE BINS

***TOTE® Systems Valu-Line Bins***

This is it. This is where it all started. TOTE® containers are the center component of the TOTE® material handling system. Our containers were the first, and to this day remain unsurpassed in their ability to efficiently transport and contain bulk materials. Each container integrates perfectly into the manufacturing process. TOTE® containers are by far the most efficient method of transporting bulk product through your manufacturing process. With increased speed and a reduction in labor, TOTE® containers are a tremendous asset to any bulk handling facility. One TOTE® container has the same capacity as 20 fiber drums. They can also be used for blending and off-line storage as well as over-the-road transportation by truck or rail.

## STANDARD FEATURES

- Four-way fork channels
- 42" x 48" footprint
- Interior and exterior welds, as laid, chemically cleaned
- 22-1/2" manway with bolted clamp ring
- Black multi-seal gasket
- 12" butterfly valve
- 45° hopper
- 304 stainless steel / aluminum / carbon steel
- Combination lifting lug / leg positioner
- 12 ga. top, bottom and hopper

## OPTIONS

- 60° mass flow hopper
- Alloy construction available
- Interior and exterior welds ground smooth and ribbon polished
- DOT / UN certification
- Automated valve opening
- Special valving for product discharge
- Custom dimensions
- Exposed or enclosed design

651 North Burleson Blvd. Burleson, Texas 76028
*Phone:* 888.838.4178 *Fax:* 817.447.7801 *website:* www.totesystems.com

***The name that started an industry.***

## ENCLOSED

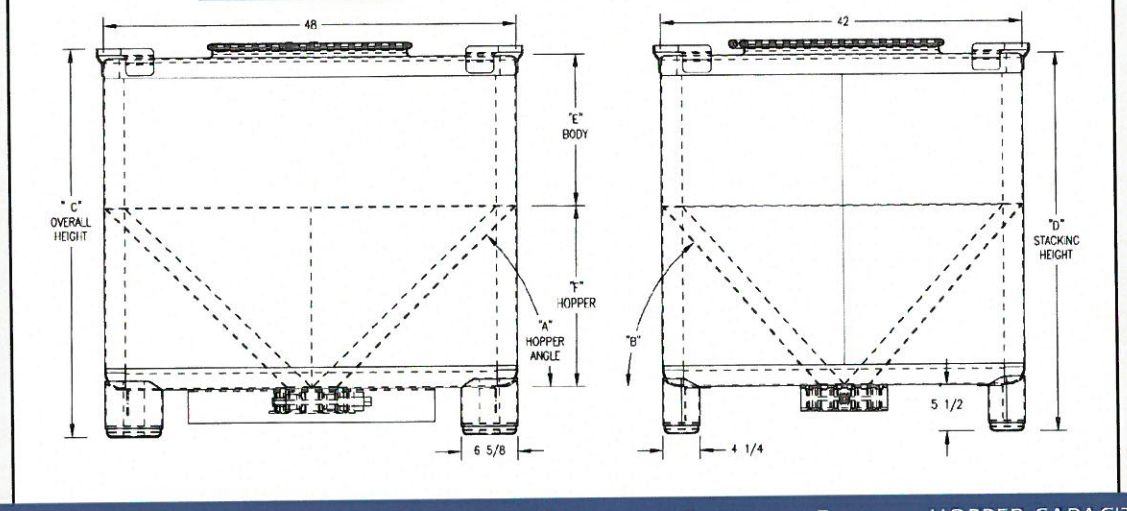


| SIZE | A | B | C | D | E | F | HOPPER CAPACITY |
|---|---|---|---|---|---|---|---|
| 30 CU FT | 45° | 49° | 45-11/32 | 44-11/32 | 17-13/16 | 21-1/32 | 9.24 CU FT |
| 62 CU FT | 45° | 49° | 72-13/16 | 71-13/16 | 45-9/32 | 21-1/32 | 9.24 CU FT |
| 78 CU FT | 45° | 49° | 86-9/16 | 85-9/16 | 59-1/32 | 21-1/32 | 9.24 CU FT |
| 98 CU FT | 45° | 49° | 103-23/32 | 102-23/32 | 76-3/16 | 21-1/32 | 9.24 CU FT |

** Shown with 30 cu ft bin and 45° hopper (DIMS based on 6" valve)*
*All dimensions in inches*

## EXPOSED

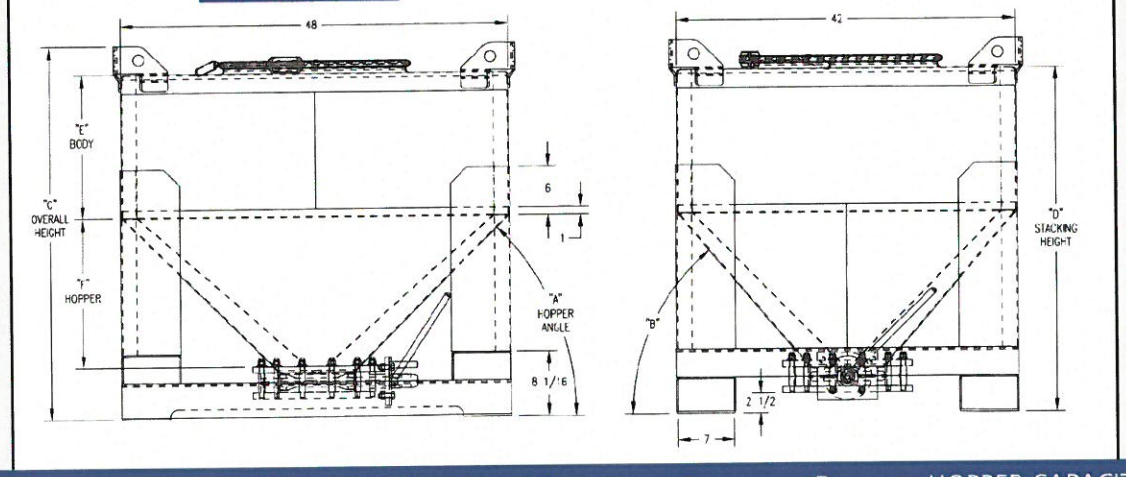


| SIZE | A | B | C | D | E | F | HOPPER CAPACITY |
|---|---|---|---|---|---|---|---|
| 30 CU FT | 45° | 50° | 46-19/32 | 42-31/32 | 17-29/32 | 18-9/16 | 9.12 CU FT |
| 62 CU FT | 45° | 50° | 74-1/16 | 70-7/16 | 45-3/8 | 18-9/16 | 9.12 CU FT |
| 78 CU FT | 45° | 50° | 87-25/32 | 84-5/32 | 59-1/8 | 18-9/16 | 9.12 CU FT |
| 98 CU FT | 45° | 50° | 104-15/16 | 101-5/16 | 76-9/32 | 18-9/16 | 9.12 CU FT |

** Shown with 30 cu ft bin and 45° hopper (DIMS based on 10" valve)*
*All dimensions in inches*


TOTE SYSTEMS®

651 North Burleson Blvd. Burleson, Texas 76028
Phone: 888.838.4178 Fax: 817.447.7801 website: www.totesystems.com


**The name that started an industry.**

APPENDIX D-7

PRELIMINARY PIPING & INSTRUMENTATION DIAGRAMS

NOTE: Sizes on these diagrams are preliminary. See Tables D-1 and D-6

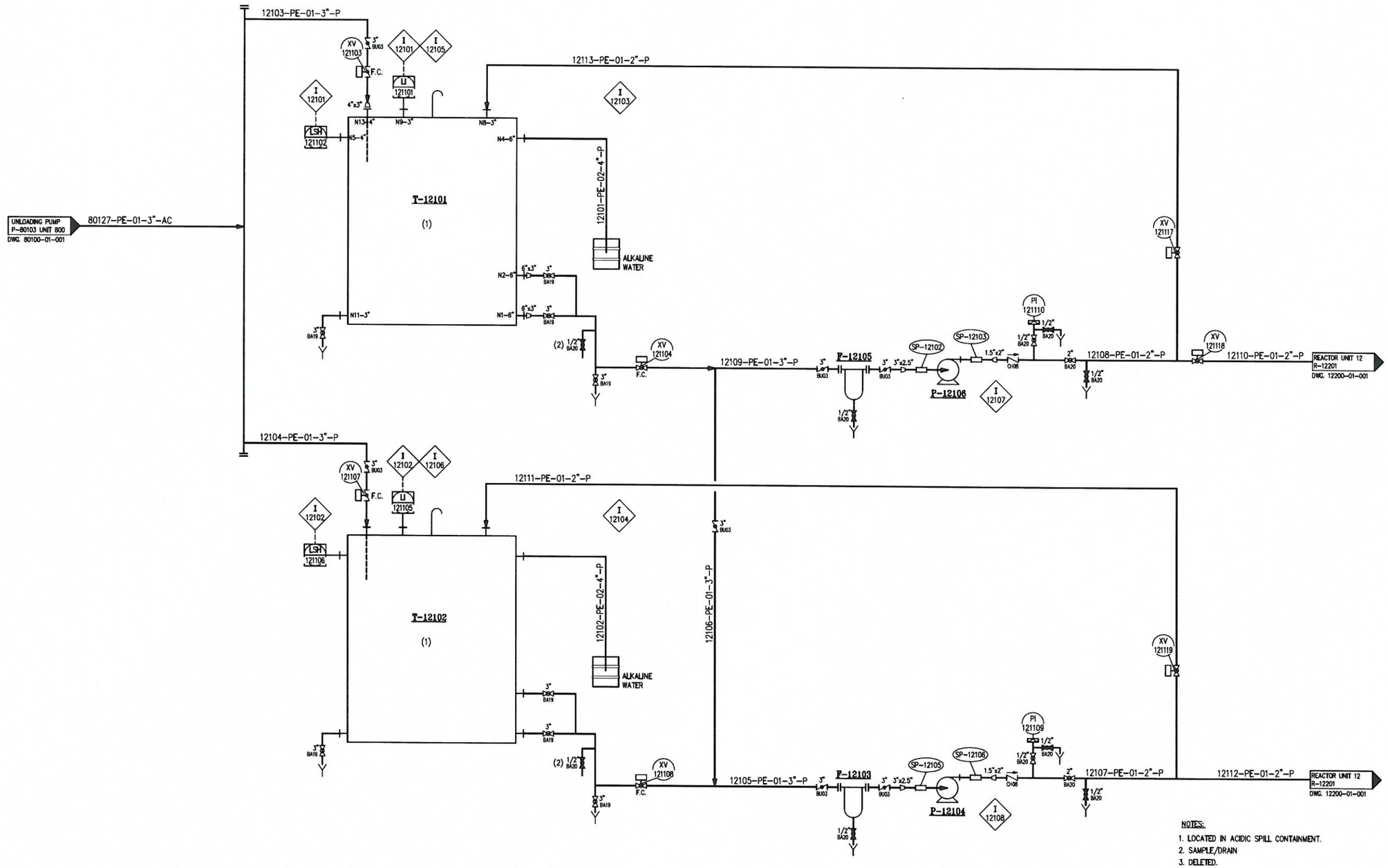


NOTES:

1. LOCATED IN ACIDIC SPILL CONTAINMENT.
2. SAMPLE/DRAIN
3. DELETED.
4. DELETED.

| TAG No. | F-12103 | F-12105 | P-12104 | P-12106 | T-12101 | T-12102 |
|---|---|---|---|---|---|---|
| Service | FILTER | FILTER | SPCP WASTE PUMP | CONC. WASTE PUMP | SPCP TANK | SPCP TANK |
| Fluid | SPCP WASTE | SPCP WASTE | SPCP WASTE | CONC. SPCP WASTE | SPCP CONC. WASTE | SPCP WASTE |
| Size | 3" - DJ | 3" - DJ | 20 m3/h; 20mLc | 20 m3/h; 20mLc | 100 m3 | 100 m3 |
| Mat. of const. | | | PVDF | PVDF | PE | PE |
| Remarks | | | | | | |

PRELIMINARY

| no. מס | description תיאור | date תאר | by מי | app. אש |
|---|---|---|---|---|
| P1 | INTERLOCKS UPDATE | 18.05.16 | Danuta | N.R. |
| P0 | PRELIMINARY | 15.11.15 | Danuta | N.R. |

REVISIONS הערות

| | by: מי | date: תאר |
|---|---|---|
| design.: עצוב | K.F. | 15.11.15 |
| drawn: שרטט | Danuta | 15.11.15 |
| check.: בדק | N.R. | 15.11.15 |
| appr.: אשר | | |

title: ELCON-USA

title: UNIT 12 STORAGE TANKS P & I DIAGRAM

proj. no מספר | dwg. no: | issue:
– | USA-12100-01-001 | P1

comp. dwg. no: USA-12100-01-001

D:\Y 5D\:Y\PI&D\PRELIMINARY\UNIT 12\USA-12100-01-001_P1.dwg, 26/05/2016 16:00:49

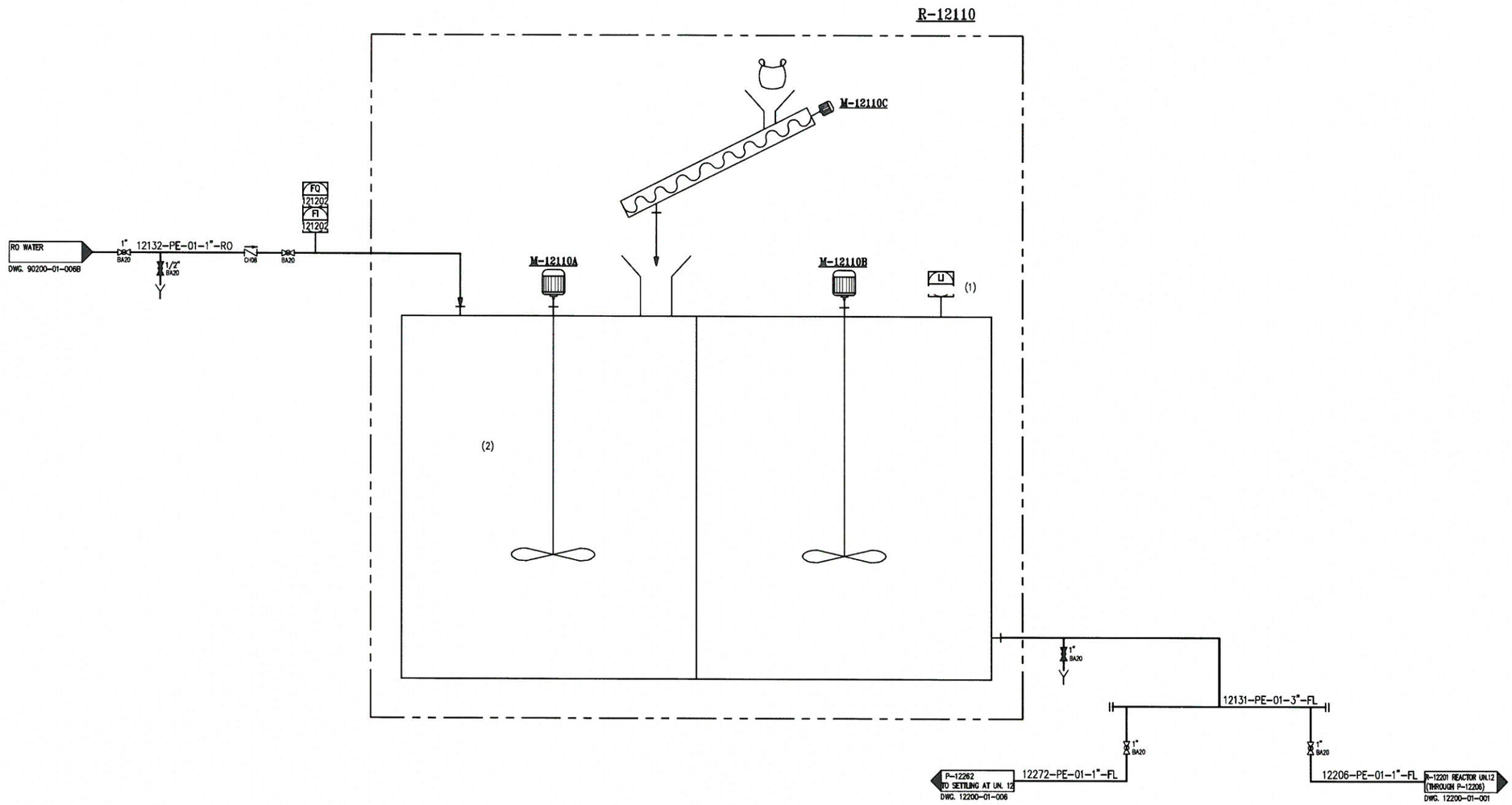


PRELIMINARY

NOTES:

1. ALL INSTRUMENTATION SHALL BE PROVIDED BY FLOCULANT SYSTEM SUPPLLIER.
2. ALL EQUIPMENT SHALL BE PROVIDED BY FLOCULANT SYSTEM SUPPLLIER.

| | |
|---|---|
| TAG No. | R-12110 |
| Service | FLOCULANT PREPARATION SYSTEM |
| Fluid | FLOCULANT |
| Size | |
| Mat. of const. | |
| Remarks | 5 kW |

| no. | description | date | by | app. |
|---|---|---|---|---|
| P0 | PRELIMINARY | 15.11.15 | Danuta | N.R. |

REVISIONS

| | by: | date: |
|---|---|---|
| design.: | K.F. | 15.11.15 |
| drawn: | Danuta | 15.11.15 |
| check.: | N.R. | 15.11.15 |
| appr.: | | |

title: ELCON-USA

title: UNIT 12
FLOCULANT PREPARATION
P & I DIAGRAM

proj. no: –
dwg. no: USA-12100-01-002
comp. dwg. no: USA-12100-01-002
issue: P0

Y:\PI&D\PRELIMINARY\UNIT 12\USA-12100-01-002 P0.dwg, 06/12/2015 13:36:14

I 12101 IF LEVEL IS HIGH HIGH OR LSH IS ON, CLOSE XV-121103 AND P-80104

I 12102 IF LEVEL IS HIGH HIGH OR LSH IS ON, CLOSE XV-121107 AND P-80104

I 12103 ONLY ONE FILLING VALVE CAN BE OPEN AT THE SAME TIME

I 12104 ONLY ONE FILLING VALVE CAN BE OPEN AT THE SAME TIME

I 12105 IF LEVEL IS LOW LOW, CLOSE XV-121104

I 12106 IF LEVEL IS LOW LOW, CLOSE XV-121108

I 12107 IF VALVE XV-121118 AND XV-121117 ARE CLOSE, CLOSE P-12106

I 12108 IF VALVE XV-121119 AND XV-122120 ARE CLOSE, CLOSE P-12104

PRELIMINARY

| no. מס' | description | date תאר | by מ | app. אש |
|---|---|---|---|---|
| P0 | PRELIMINARY | 18.05.16 | Danuta | N.R. |

REVISIONS מהדורות

| | by: מ | date: תאריך |
|---|---|---|
| design.: עצב | K.F. | 18.05.16 |
| drawn: מרשם | Danuta | 18.05.16 |
| check.: בדק | N.R. | 18.05.16 |
| appr.: אשר | | |

elcon

title: שם המתקן ELCON-USA

title: שם תת-מערכת UNIT 12
AREA 100
INTERLOCKS LIST

proj. no מספר פרויקט: –

dwg. no: מס. שרטוט: USA-12100-01-030

comp. dwg. no: מס. שרטוט מחשב USA-12100-01-030

issue: מהדורה P0

מ:\Y מ\:Y\PI&D\PRELIMINARY\LAST VERSIONS (ALL UNITS)\UNIT 12\USA-12100-01-030_P0.dwg, 21/06/2016 09:38:18

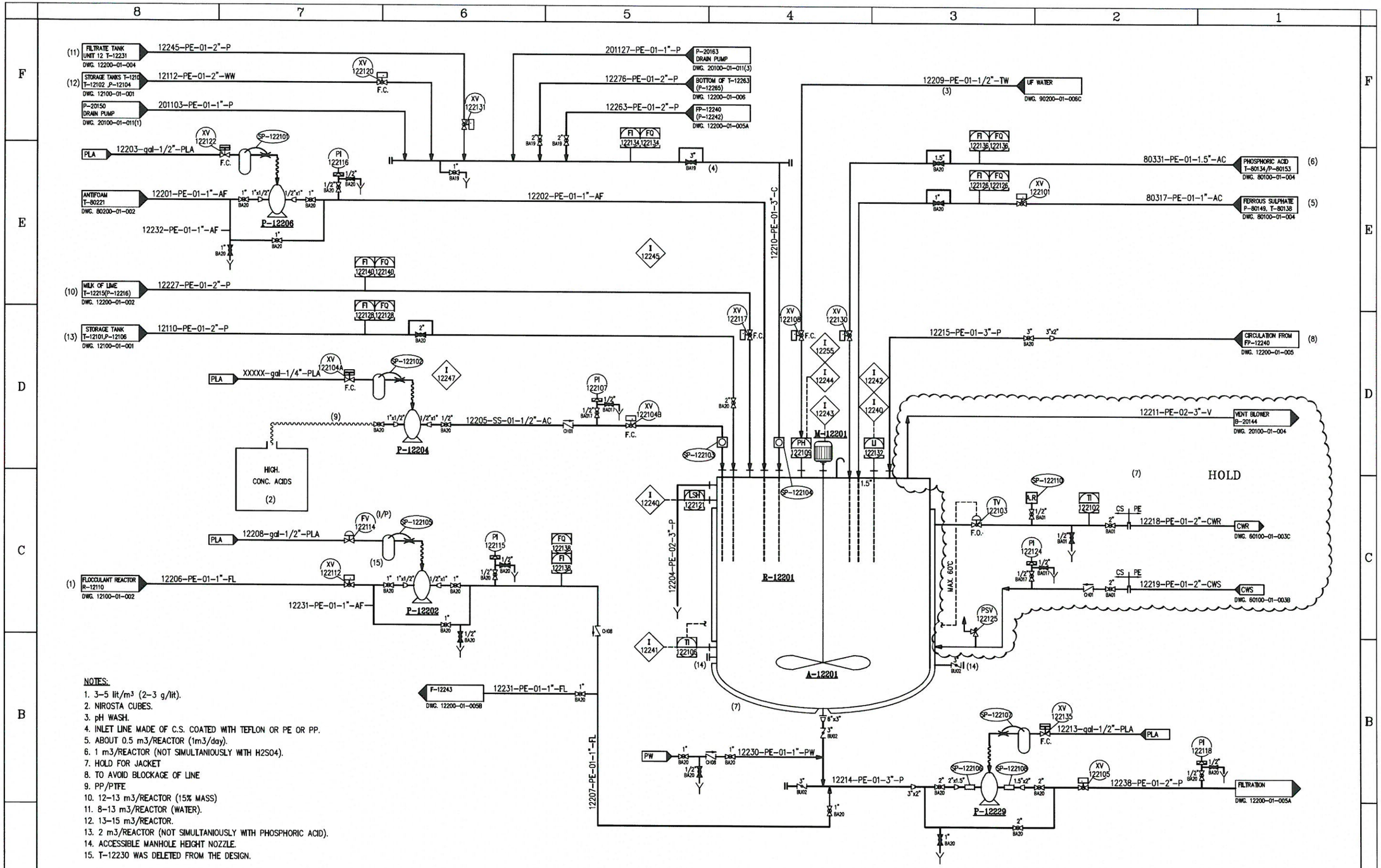


NOTES:

1. 3-5 lit/m³ (2-3 g/lit).
2. NIROSTA CUBES.
3. pH WASH.
4. INLET LINE MADE OF C.S. COATED WITH TEFLON OR PE OR PP.
5. ABOUT 0.5 m3/REACTOR (1m3/day).
6. 1 m3/REACTOR (NOT SIMULTANIOUSLY WITH H2SO4).
7. HOLD FOR JACKET
8. TO AVOID BLOCKAGE OF LINE
9. PP/PTFE
10. 12-13 m3/REACTOR (15% MASS)
11. 8-13 m3/REACTOR (WATER).
12. 13-15 m3/REACTOR.
13. 2 m3/REACTOR (NOT SIMULTANIOUSLY WITH PHOSPHORIC ACID).
14. ACCESSIBLE MANHOLE HEIGHT NOZZLE.
15. T-12230 WAS DELETED FROM THE DESIGN.

| TAG No. | A-12201 | P-12202 | P-12204 | P-12206 | R-12201 | P-12229 |
|---|---|---|---|---|---|---|
| Service | SCPC REACTOR'S AGITATOR. | FLOCCULANT PUMP | ACID PUMP | TRANSFER PUMP | SCPC REACTOR | TRANSFER PUMP |
| Fluid | SPCP WASTE | FLOCCULANT | RAPHAEL CONC. ACID | ANTI FOAM | SLUDGE | SPCP WASTE |
| Size | | 1/2" AIR DIAPH. | 1/4" AIR DIAPH. | 1/2" AIR DIAPH. | 35 m3 | 2" AIR DIAPH. |
| Mat. of const. | SS | SS | SS/TEFLON | SS | | PE |
| Remarks | 15 kW | | EXIST | | EXIST IN STORAGE JACKET 200000Kcal/h-HOLD | |

PRELIMINARY

| no. | description | date | by | op. |
|---|---|---|---|---|
| P2 | INTERLOCKS UPDATE | 18.05.16 | Danuta | N.R. |
| P1 | FOR APPROVAL | 14.04.16 | Danuta | N.R. |
| P0 | PRELIMINARY | 15.11.15 | Danuta | N.R. |

REVISIONS

| | by: | date: |
|---|---|---|
| design.: | K.F. | 15.11.15 |
| drawn.: | Danuta | 15.11.15 |
| check.: | N.R. | 15.11.15 |
| appr.: | | |

title: ELCON-USA

title: UNIT 12 REACTOR SECTION P & I DIAGRAM

proj. no: -

dwg. no: USA-12200-01-001

comp. dwg. no: USA-12200-01-001

issue: P2

elcon

:\Y 9\:Y\PI&D\PRELIMINARY\UNIT 12\USA-12200-01-001_P2.dwg, 26/05/2016 15:38:23

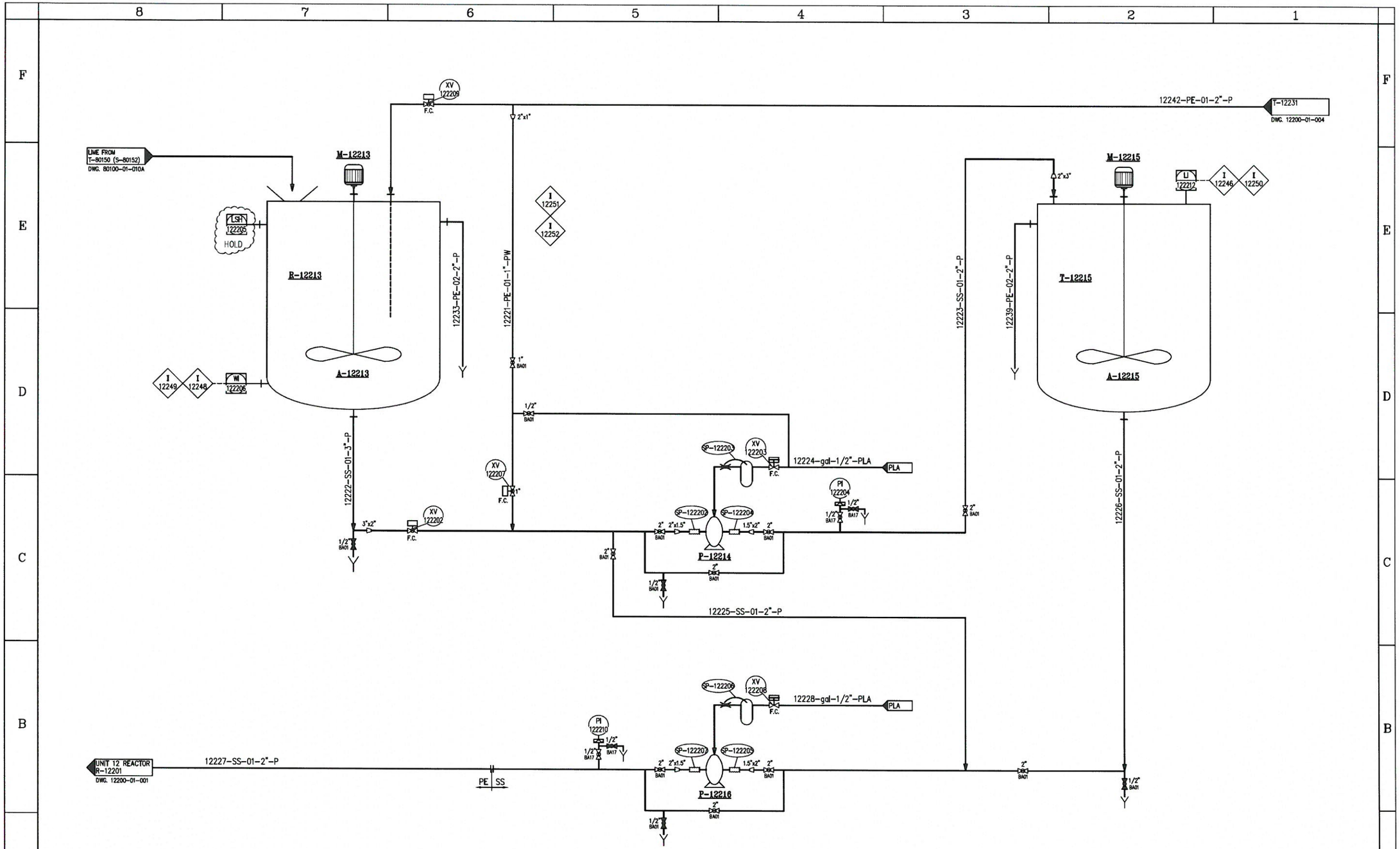


| TAG No. | A-12213 | A-12215 | R-12213 | P-12214 | P-12216 | T-12215 |
|---|---|---|---|---|---|---|
| Service | LIME REACTOR AGITATOR | LIME STORAGE AGITATOR | LIME REACTOR | LIME PUMP | LIME PUMP | STORAGE TANK |
| Fluid | MILK OF LIME | MILK OF LIME | MILK OF LIME | MILK OF LIME | MILK OF LIME | MILK OF LIME |
| Size | | | 10 m3 | 1.5" Air Diaph. | 1.5" Air Diaph. | 10 m3 |
| Mat. of const. | | | C.S. | S.S. | S.S. | S.S. |
| Remarks | | | | | | |

PRELIMINARY

| no. מס' | description תאור | date תאריך | by מי | app. אש |
|---|---|---|---|---|
| P1 | INTERLOCKS UPDATE | 18.05.16 | Danuta | N.R. |
| P0 | PRELIMINARY | 15.11.15 | Danuta | N.R. |

REVISIONS הערות

| | by: מי | date: תאריך |
|---|---|---|
| design.: עצוב | K.F. | 15.11.15 |
| drawn: מצוב | Danuta | 15.11.15 |
| check.: בודק | N.R. | 15.11.15 |
| appr.: אשר | | |

title: שם הפרויקט ELCON-USA

title: שם תת-פרויקט UNIT 12
MILK OF LIME PREPARATION
P & I DIAGRAM

proj no מספר פרויקט: –
dwg. no: מס' שרטוט: USA-12200-01-002
comp. dwg. no: מס. שרטוט מחשב: USA-12200-01-002
issue: P1 הוצאה

elcon

מ:\Y מ\:Y\PI&D\PRELIMINARY\UNIT 12\USA-12200-01-002_P1.dwg, 26/05/2016 15:39:45

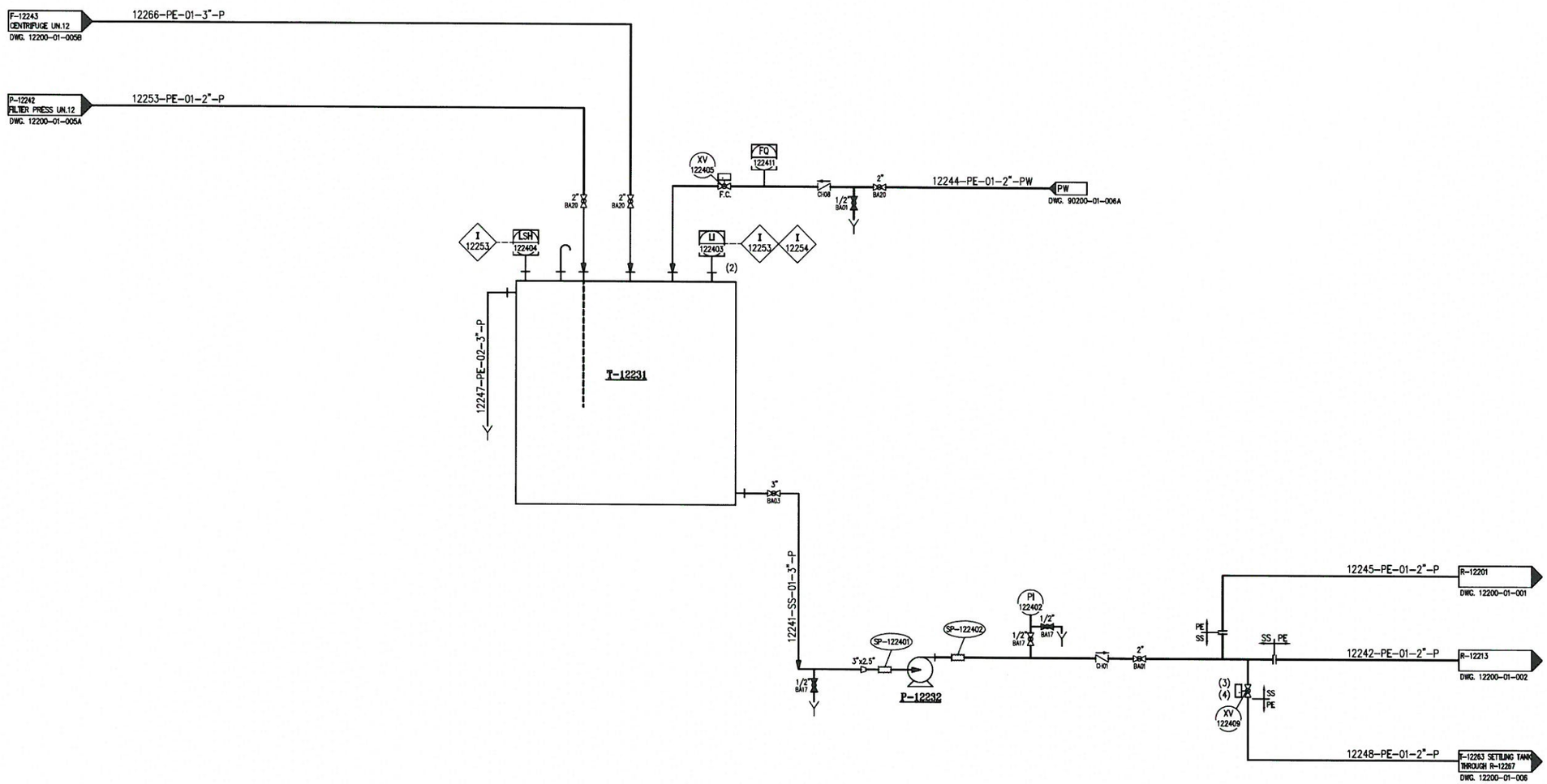


PRELIMINARY

NOTES:

1. DELETED.
2. WORKING LEVEL IN TANK ~50%
3. WHEN LEVEL IN TANK HIGHER THAN 60%, OPEN XV-122409 VALVE.
4. CONTROL CAPACITY TO ~5 $m^3/h$.

| TAG No. | T-12231 | P-12232 |
|---|---|---|
| Service | FILTRATE TANK | FILTRATE PUMP |
| Fluid | FILTRATE | FILTRATE |
| Size | 10 m3 | 20 m3/hr, 30 m |
| Mat. of const. | PE | SS |
| Remarks | | |

| no. | description | date | by | app. |
|---|---|---|---|---|
| P1 | INTERLOCKS UPDATE | 18.05.16 | Danuta | N.R. |
| P0 | PRELIMINARY | 15.11.15 | Danuta | N.R. |

REVISIONS

| | by: | date: |
|---|---|---|
| design.: | K.F. | 15.11.15 |
| drawn.: | Danuta | 15.11.15 |
| check.: | N.R. | 15.11.15 |
| appr.: | | |

title: ELCON-USA

title: UNIT 12 FILTRATE TANK P & I DIAGRAM

proj. no: –

dwg. no: USA-12200-01-004

comp. dwg. no: USA-12200-01-004

issue: P1

J:\Y DJ\:Y\PI&D\PRELIMINARY\UNIT 12\USA-12200-01-004_P1.dwg, 26/05/2016 15:40:52

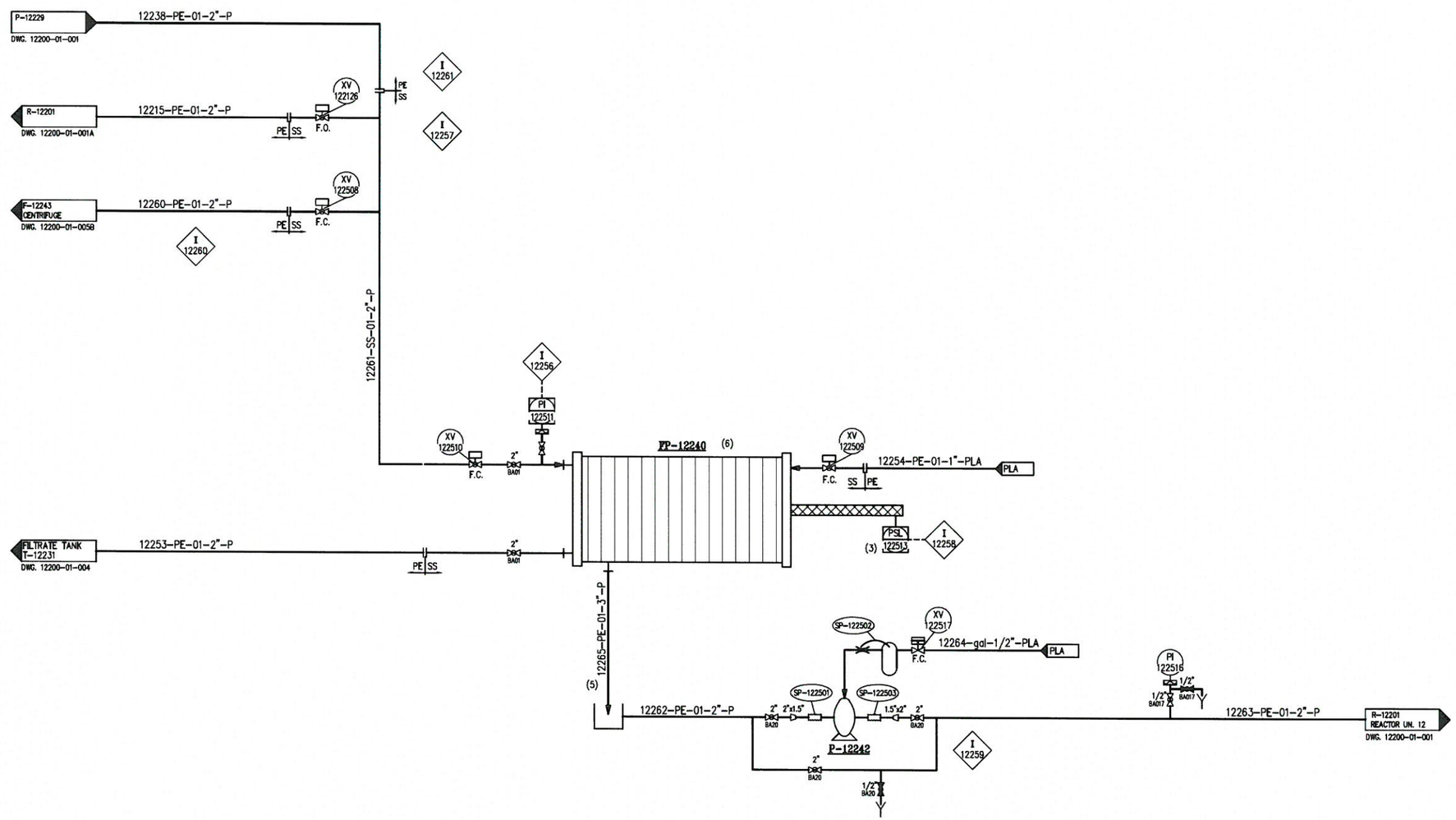


NOTES:

1. RUN, STOP INDICATIONS.
2. LOCATED NEAR BIOLOGICAL TREATMENT AREA.
3. TO BE SUPPLIED WITH FILTER PRESS.
4. DRAINAGE.
5. PIT.
6. OPTION FOR CENTRIFUGE.

PRELIMINARY

| TAG No. | FP-12240 | P-12242 |
|---|---|---|
| Service | FILTER PRESS | TRANSFER PUMP |
| Fluid | | SPCP WASTE WATER |
| Size | | 1.5 AIR DIAPH |
| Mat. of const. | | SS |
| Remarks | | |

| no. | description | date | by | app. |
|---|---|---|---|---|
| P2 | TITLE UPDATED | 21.02.17 | Danuta | N.R. |
| P1 | INTERLOCKS UPDATE | 18.05.16 | Danuta | N.R. |
| P0 | PRELIMINARY | 15.11.15 | Danuta | N.R. |

REVISIONS

| | by: | date: |
|---|---|---|
| design.: | K.F. | 15.11.15 |
| drawn: | Danuta | 15.11.15 |
| check.: | N.R. | 15.11.15 |
| appr.: | | |

title: ELCON-USA

title: UNIT 12 SALTS CONCENTRATION & OVEN P & I DIAGRAM

proj. no: –

dwg. no: USA-12200-01-005A

comp. dwg. no: USA-12200-01-005A

issue: P2

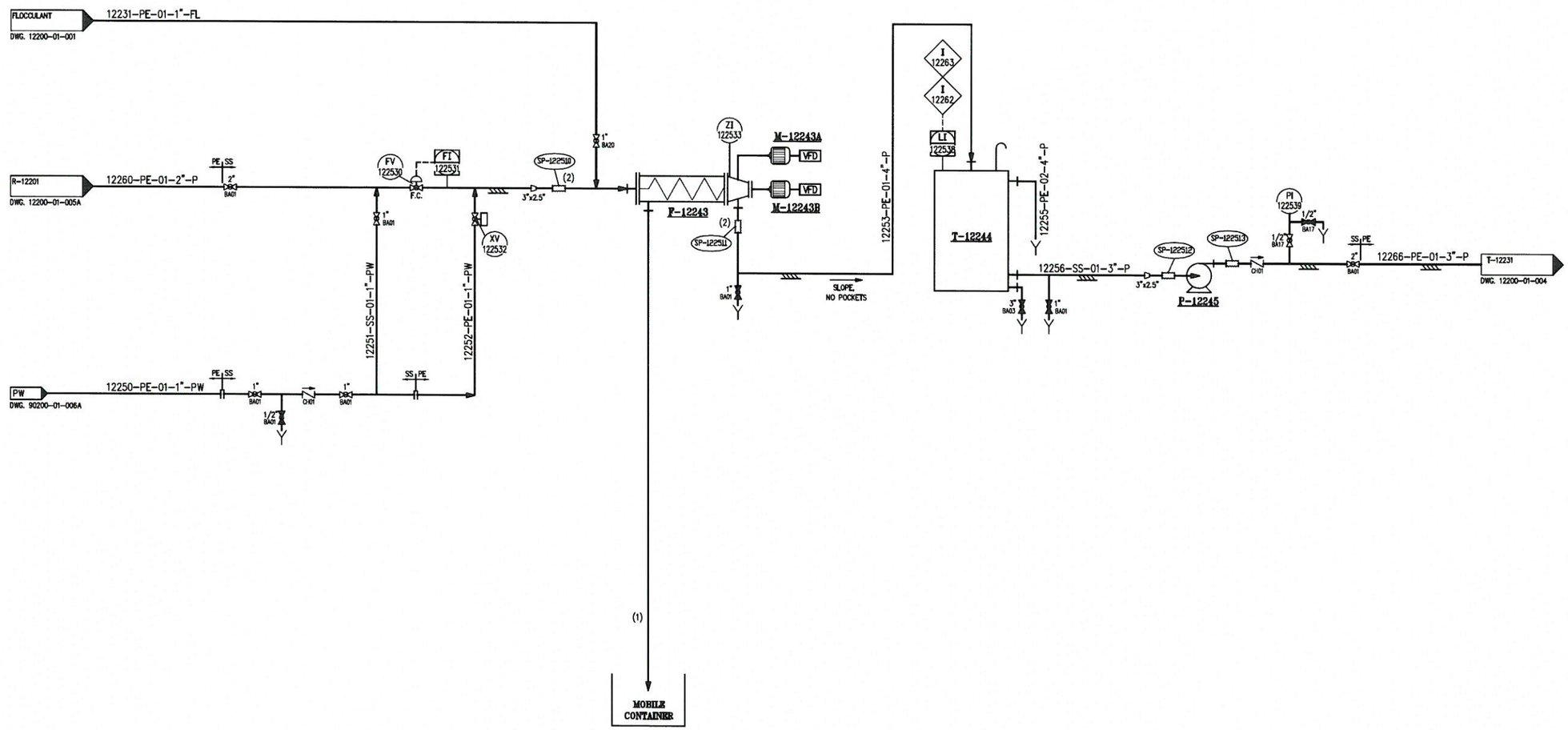


PRELIMINARY

NOTES:

1. LINE WITH BIG DIAM. TO AVOID BLOCKAGE.
2. HOSE 1.5 m LENGTH.
3. ONLY RUN, FAULT, STOP.

| TAG No. | F-12243 | T-12244 | P-12245 |
|---|---|---|---|
| Service | CENTRIFUGE | TANK | FILTRATE WATER PUMP |
| Fluid | GYPSUM | FILTRATE WATER | FILTRATE WATER |
| Size | 5 m3/hr | 1.5-2 m3 | 30 m3/hr, 30mLc |
| Mat. of const. | SS316 | SS/PE | SS |
| Remarks | | | |

| no. | description | date | by | ע |
|---|---|---|---|---|
| P2 | TITLE UPDATED | 21.02.17 | Danuta | N.R. |
| P1 | INTERLOCKS UPDATE | 18.05.16 | Danuta | N.R. |
| P0 | PRELIMINARY | 15.11.15 | Danuta | N.R. |

REVISIONS

| | by: | date: |
|---|---|---|
| design.: | K.F. | 15.11.15 |
| drawn: | Danuta | 15.11.15 |
| check.: | N.R. | 15.11.15 |
| appr.: | | |

title: ELCON-USA

title: UNIT 12 CENTRIFUGE P & I DIAGRAM

elcon

| proj. no | dwg. no | issue |
|---|---|---|
| – | USA-12200-01-005B | P2 |

comp. dwg. no: USA-12200-01-005B

:\D\:Y PDL:Y\PI&D\PRELIMINARY\LAST VERSIONS (ALL UNITS)\UNIT 12\USA-12200-01-005B P2.dwg, 21/02/2017 08:48:54

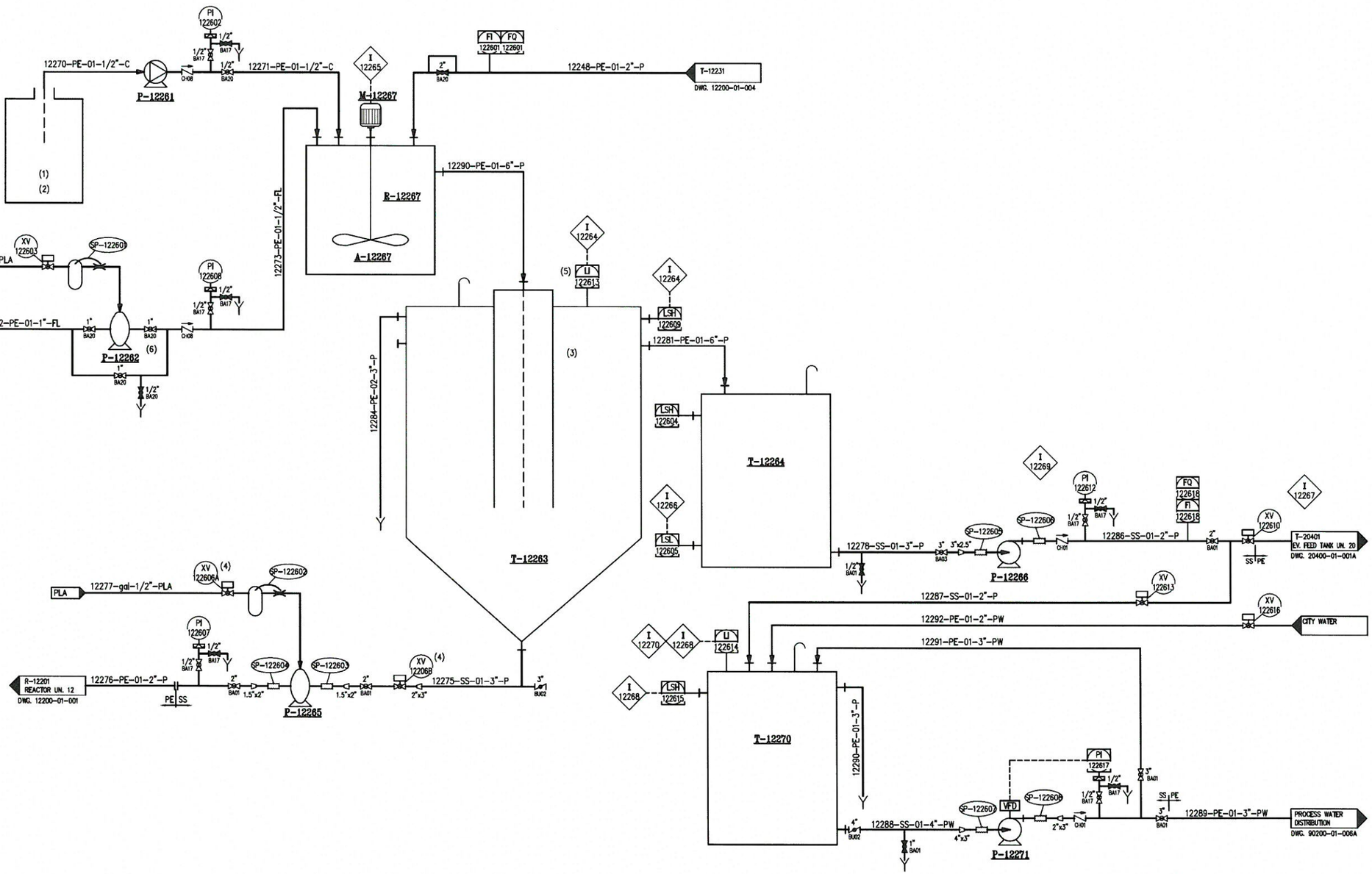


PRELIMINARY

NOTES:
1. CUBE OF CARBONATE SOLUTION.
2. 7 lit/m3.
3. 8" PIPE TO BE LOCATED ABOUT 50 cm ABOVE CONE.
4. SAME DO.
5. LI FOR SLUDGE.
6. 5-10 lit/m3, 50-100 lit/h

| TAG No. | P-12261 | P-12262 | T-12263 | T-12264 | P-12265 | P-12266 | R-12267 | A-12267 | T-12270 | P-12271 |
|---|---|---|---|---|---|---|---|---|---|---|
| Service | DOSSING PUMP | PUMP | SETTLING TANK | OVERFLOW TANK | DISCH. PUMP | DISCH. PUMP | REACTOR | AGITATOR | PW TANK | TRANSFER PUMP |
| Fluid | CARBONATE | FLOCCULANT | WATER | WATER | WASTE WATER | WATER | WASTE WATER | WASTE WATER | PROCESS WATER | PROCESS WATER |
| Size | 50 lit/h | 0.5" AIR DIAPH. | 15-20 m3 | 1-2m3 | 1½" AIR DIAPH. | 20 m3/hr,30 mLc | 1 m3 | | 40 m3 | 40 m3/hr,40 mLc |
| Mat. of const. | | PP | CS | PE/SS | SS | | PE | SS | FRP | SS |
| Remarks | | | | | | | | | | |

| no. | description | date | by | appr. |
|---|---|---|---|---|
| P1 | INTERLOCKS UPDATE | 18.05.16 | Danuta | N.R. |
| P0 | PRELIMINARY | 15.11.15 | Danuta | N.R. |

REVISIONS

| | by: | date: |
|---|---|---|
| design.: | K.F. | 15.11.15 |
| drawn: | Danuta | 15.11.15 |
| check.: | N.R. | 15.11.15 |
| appr.: | | |

title: ELCON-USA

title: UNIT 12
SODIUM CARBONATE SETTLEMENT
P & I DIAGRAM

proj. no: –
dwg. no: USA-12200-01-006
comp. dwg. no: USA-12200-01-006
issue: P1

I 12240 IF LEVEL IS HIGH HIGH OR LSH IS ON, CLOSE XV-122104B, XV-122108, XV-122120, XV-122130, XV-122131, XV-122217, XV-122517 AND XV-121118

I 12241 IF TEMP. IS HIGH HIGH, CLOSE XV-122101, XV-122104B, XV-122120, XV-122130 AND XV-122217

I 12242 IF LEVEL IS LOW LOW, CLOSE M-12201

I 12243 IF AGITATOR IS NOT WORKING, CLOSE XV-122104B, XV-122105, XV-122107, XV-122108, XV-122120, XV-122130, 122131, XV-122217, XV-122517 AND XV-121118

I 12244 IF PH IS LOW, CLOSE XV-122101, XV-122104B, XV-122120, XV-122130 AND XV-121118

I 12245 ONLY ONE INLET IS AVAILABLE. XV-122101 OR XV-122104B OR XV-122117 OR XV-122120 OR XV-122130 OR XV-122131 OR XV-121118

I 12246 ON LI-122212 LOW LOW ALARM, CLOSE XV-122117 AND XV-122208

I 12247 IF XV-122104B, CLOSE XV-122104A

I 12248 ON HIGH WI-122206 OR LSH-122205, CLOSE XV-122209

I 12249 ON LOW WI-122206, CLOSE A-12213, XV-122202 AND XV-122203

I 12250 ON HIGH HIGH LI-122212, CLOSE XV-122202 AND XV-122203

I 12251 WHEN XV-122207 OR XV-122209 IS OPEN, CLOSE XV-122202

I 12252 WHEN XV-122202 IS CLOSE, CLOSE ALSO XV-122203

I 12253 ON LI-122403 HIGH HIGH LEVEL OR LSH-122404, CLOSE XV-122105, XV-122135, XV-122405 AND P-12245

I 12254 ON LI-122403 LOW LOW LEVEL, CLOSE P-12232

I 12255 IF PH-122109 IS NOT O.K., CLOSE XV-122105 AND XV-122135

I 12256 ON PI-122511 HIGH AND XV-122508 CLOSE, CLOSE XV-122510 AND OPEN XV-122126

I 12257 XV-122126 AND XV-122508 SHALL NOT BE OPEN AT THE SAME TIME

I 12258 ON PSL-122513 AND XV-122508 OPEN, CLOSE XV-122510 AND OPEN XV-122126

I 12259 IF R-12201 IS NOT READY TO RECEIVE, CLOSE XV-122517

I 12260 IF F-12243 IS NOT READY, CLOSE XV-122508

I 12261 IF XV-122510 AND XV-1220508 ARE CLOSE, OPEN XV-122126

I 12262 ON LI-122538 HIGH LEVEL, STOP F-12243

I 12263 ON LI-122538 LOW LEVEL, STOP F-12245

I 12264 ON LI-122613 HIGH LEVEL OR LSH-122604 OR LSH-122609, CLOSE XV-122603, XV-122409 AND P-12261

I 12265 IF A-12267 NOT RUNNING, STOP P-12261, CLOSE XV-122409 AND XV-122603

I 12266 ON LSL-122605, CLOSE P-12266

I 12267 IF T-20401 IS NOT READY TO FILL, CLOSE XV-122610

I 12268 ON LI-122614 HIGH LEVEL OR LSH-122615, CLOSE XV-122613 AND XV-122616

I 12269 IF XV-122610 AND XV-122613 IS CLOSE, STOP P-12266

I 12270 ON LI-122614 LOW LEVEL CLOSE P-12271

PRELIMINARY

| no. | description | date | by | app. |
|---|---|---|---|---|
| P1 | TYPO CORRECTION | 06.07.16 | Danuta | N.R. |
| P0 | PRELIMINARY | 18.05.16 | Danuta | N.R. |

REVISIONS

| | by: | date: |
|---|---|---|
| design.: | K.F. | 18.05.16 |
| drawn.: | Danuta | 18.05.16 |
| check.: | N.R. | 18.05.16 |
| appr.: | | |

title: ELCON-USA

title: UNIT 12 AREA 200 INTERLOCKS LIST

proj. no: –

dwg. no: USA-12200-01-030

comp. dwg. no: USA-12200-01-030

issue: P1

elcon engineering

| | |
|---|---|
| I 20101 | IF NO GROUNDING, STOP PUMP P-20110 |
| I 20102 | IF NO GROUNDING, CLOSE VALVE XV-201109 |
| I 20103 | IF NO GROUNDING, STOP PUMP P-20111 |
| I 20104 | IF NO GROUNDING, STOP PUMP P-20112 |
| I 20105 | IF LI-201207 IS HIGH HIGH OR LSH-201210 IS ON, CLOSE XV-201201, XV-201202, XV-201218 AND COMPATIBLE PUMP |
| I 20106 | IF LI-201206 IS HIGH HIGH OR LSH-201211 IS ON, CLOSE XV-201203, XV-201204, XV-201219 AND COMPATIBLE PUMP |
| I 20107 | IF LI-201311 IS HIGH HIGH OR LSH-201312 IS ON, CLOSE XV-201310, XV-201316, XV-201318 AND COMPATIBLE PUMP |
| I 20108 | IF LI-201301 IS HIGH HIGH OR LSH-201303 IS ON, CLOSE XV-201302, XV-201317, XV-201319 AND COMPATIBLE PUMP |
| I 20109 | IF LI-201330 IS HIGH HIGH OR LSH-201333 IS ON, CLOSE XV-201331, XV-201332, XV-201355 AND COMPATIBLE PUMP |
| I 20110 | IF LI-201352 IS HIGH HIGH OR LSH-201351 IS ON, CLOSE XV-201353, XV-201354, XV-201356 AND COMPATIBLE PUMP |
| I 20111 | ONLY ONE VALVE CAN BE OPEN AT ANY TIME. IF ALL VALVES ARE CLOSE, CLOSE P-20110 |
| I 20112 | ONLY ONE VALVE CAN BE OPEN AT ANY TIME. IF ALL VALVES ARE CLOSE, CLOSE P-20111 |
| I 20113 | ONLY ONE VALVE CAN BE OPEN AT ANY TIME. IF ALL VALVES ARE CLOSE, CLOSE P-20112 |
| I 20119 ÷ I 20114 | ONLY ONE FILLING VALVE TO TANK CAN BE OPEN AT THE SAME TIME |
| I 20125 ÷ I 20120 | IF LEVEL ALARM IS LOW LOW, STOP AGITATOR AT COMPATIBLE TANK |
| I 20130 | IF B-20149 IS NOT RUNNING, STOP B-20144 |
| I 20131 | IF B-20149 IS NOT RUNNING, STOP B-20145 |
| I 20132 | IF B-20149 IS NOT RUNNING, CLOSE XV-201503 AND OPEN XV-201504 |
| I 20133 | IF B-20149 IS NOT RUNNING, CLOSE XV-201603 AND OPEN XV-201604 |
| I 20134 | IF B-20149 IS NOT RUNNING, CLOSE XV-201703 AND OPEN XV-201704 |
| I 20135 | IF B-20149 IS NOT RUNNING, CLOSE XV-201803 AND OPEN XV-201804 |
| I 20136 | WHEN T.O. IS NOT ON TEMP., STOP B-20149 |

| | |
|---|---|
| P1 I 20160 ÷ I 20140 | OPEN PUMP VALVE ON LSH |
| I 20170 | START WHEN B-20149 IS NOT RUNNING, STOP WHEN B-20149 IS RUNNING |
| I 20171 | ON TI HIGH, STOP B-20170 AND OPEN XV-201721 |
| I 20180 | ALLOW UNLOADING ONLY AFTER LAB APPROVAL |
| I 20181 | ALLOW UNLOADING ONLY AFTER LAB APPROVAL |
| I 20182 | ALLOW UNLOADING ONLY AFTER LAB APPROVAL |
| I 20183 | IF LI-201311 IS LOW LOW, CLOSE XV-201314 |
| I 20184 | IF LI-201301 IS LOW LOW, CLOSE XV-201306 |
| I 20185 | IF LI-201207 IS LOW LOW, CLOSE XV-201213 |
| I 20186 | IF LI-201206 IS LOW LOW, CLOSE XV-201214 |
| I 20187 | IF VALVES XV-201213 AND XV-201214 ARE CLOSE, CLOSE P-20127 |
| I 20188 | IF LI-201330 IS LOW LOW, CLOSE XV-201341 |
| I 20189 | IF LI-201352 IS LOW LOW, CLOSE XV-201347 |
| I 20190 | IF VALVES XV-201306, XV-201314, XV-201341 AND XV-201347 ARE CLOSE, CLOSE P-20123 |
| I 20191 | IF FI-201338 INDICATE LOW LOW FLOW, CLOSE P-20123 |
| I 20192 | IF FI-201217 INDICATE LOW LOW FLOW, CLOSE P-20127 |

PRELIMINARY

| no. | description | date | by | app. |
|---|---|---|---|---|
| P1 | CONTAINER STORAGE AREA | 15.02.17 | Danuta | N.R. |
| P0 | PRELIMINARY | 18.05.16 | Danuta | N.R. |

REVISIONS

| | by: | date: |
|---|---|---|
| design.: | K.F. | 18.05.16 |
| drawn: | Danuta | 18.05.16 |
| check.: | N.R. | 18.05.16 |
| appr.: | | |

title: ELCON-USA

title: UNIT 20 AREA 100 INTERLOCKS LIST

elcon

proj. no: –

dwg. no: USA-20100-01-020

comp. dwg. no: USA-20100-01-020

issue: P1

:\D\:Y מס :\Y\PI&D\PRELIMINARY\LAST VERSIONS (ALL UNITS)\UNIT 20\USA-20100-01-020_P1.dwg, 16/02/2017 13:37:17

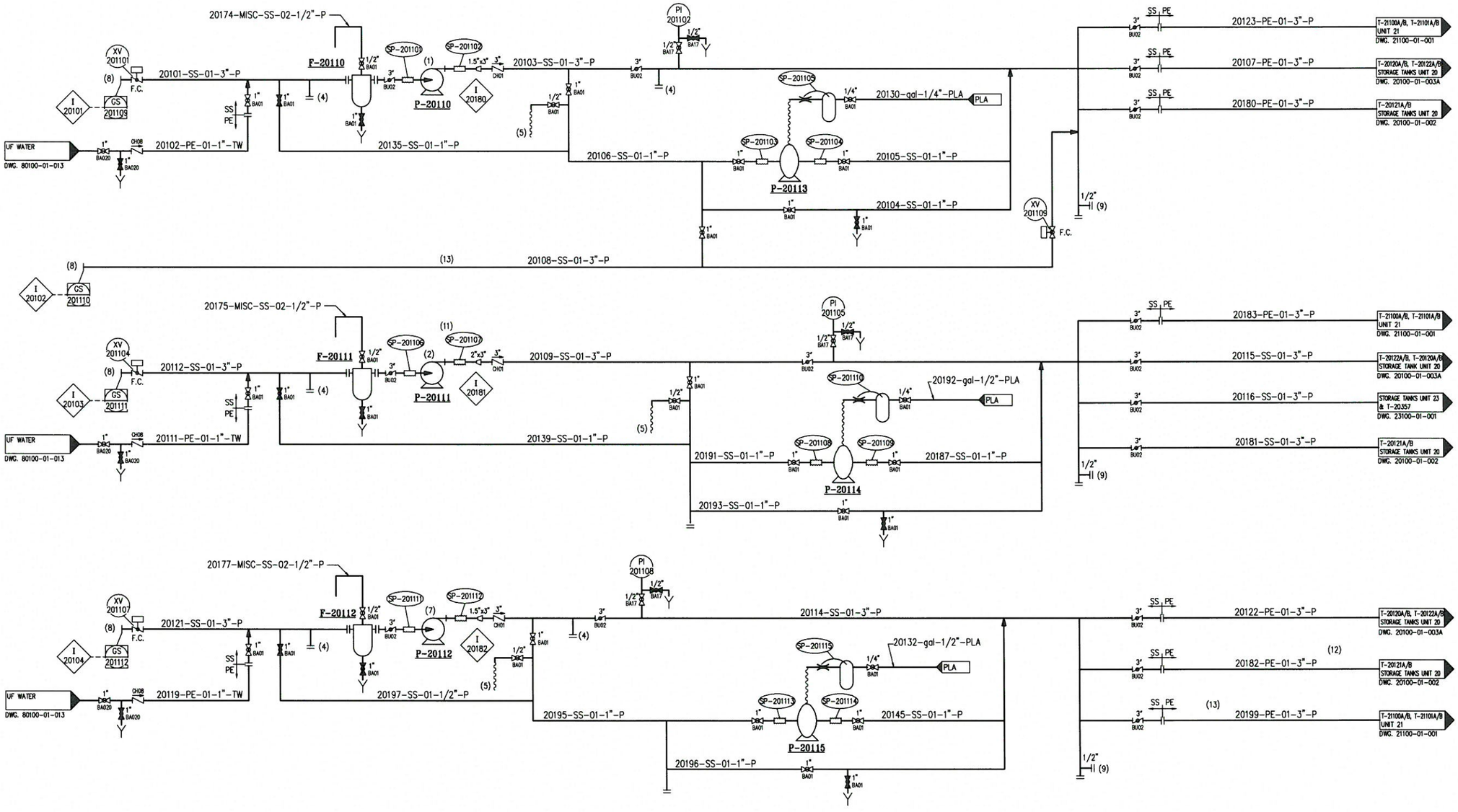


| TAG No. | F-20110 | P-20110 | F-20111 |
|---|---|---|---|
| Service | FILTER | TRUCK UNLOADING PUMP | FILTER |
| Fluid | WASTE WATER | WASTE WATER | CONC. WASTE WATER |
| Size | COARSE 3" | 40 m3/h, 30mLc | COARSE 3" |
| Mat. of const. | SS | SS | SS |
| Remarks | | EX. PROOF MOTOR | |

| TAG No. | P-20113 | P-20114 | P-20115 | P-20111 | F-20112 | P-20112 |
|---|---|---|---|---|---|---|
| Service | LINE DISCHARGE PUMP | LINE DISCHARGE PUMP | LINE DISCHARGE PUMP | TRUCK UNLOADING PUMP | FILTER | TRUCK UNLOADING PUMP |
| Fluid | WASTE WATER | WASTE WATER | WASTE WATER | CONC. WASTE WATER | WASTE WATER | CONC. WASTE WATER |
| Size | 1" air diaph. | 1" air diaph. | 1" air diaph. | 40 m3/h, 30mLc | COARSE 3" | 40 m3/h, 30mLc |
| Mat. of const. | SS | SS | SS | SS | SS | SS |
| Remarks | SB1 | SB1 | | EX. PROOF PUMP | | MOTOR EX. PROOF |

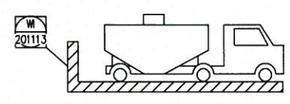


PRELIMINARY

NOTES:

1. UNLOADING STATION No.1
2. UNLOADING STATION No.2
3. SAMPLE
4. HOLD - BACKUP PUMP
5. DRAINAGE SUCTION FROM SUMP.
6. ONE DRAINAGE SUMP FOR EACH UNLOADING STATION (TO CLOSE XV)
7. UNLOADING STATION No.3
8. GROUNDING DEVICE WILL INTERLOCK IF NO GROUNDING (HAZOP)
9. FUTURE CONNECTION FOR CONTINUOUS SAMPLING.
10. DO NOT DESIGN AT THIS STAGE.
11. THERE SHALL BE A SPARE IDENTICAL PUMP IN WAREHOUSE.
12. ONLY DESIGN AT THIS STAGE.
13. MIN. DISTANCE.

| no. | description | date | by | app. |
|---|---|---|---|---|
| P1 | INTERLOCKS UPDATE | 18.05.16 | Danuta | N.R. |
| P0 | PRELIMINARY | 15.11.15 | Danuta | N.R. |

REVISIONS

| | by: | date: |
|---|---|---|
| design.: | K.F. | 15.11.15 |
| drawn.: | Danuta | 15.11.15 |
| check.: | N.R. | 15.11.15 |
| appr.: | | |

elcon

title: ELCON-USA

title: UNIT 20 UNLOADING STATIONS P & I DIAGRAM

proj. no: –

dwg. no: USA-20100-01-001

comp. dwg. no: USA-20100-01-001

issue: P1

:\DG:\Y:\PI&D\PRELIMINARY\LAST VERSIONS (ALL UNITS)\UNIT 20\USA-20100-01-001_P1.dwg, 22/02/2017 08:13:55

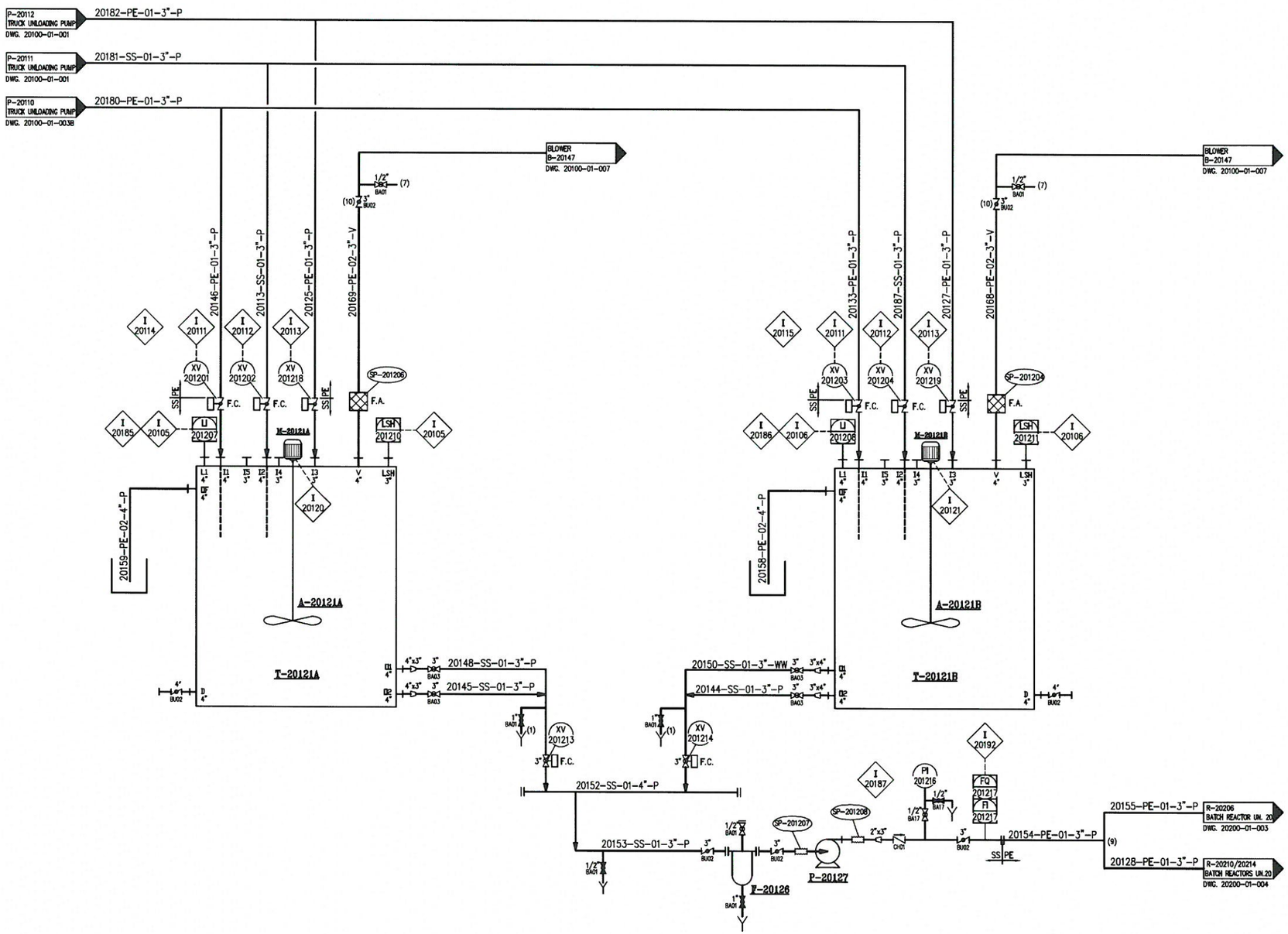


PRELIMINARY

NOTES:

1. SAMPLE/DRAIN, POSSIBILITY TO TREATMENT IN BATCH REACTORS R-20206 / R-20210 / R-20214
2. DELETED.
3. DELETED.
4. WITH FLOW DIRECTION.
5. DELETED.
6. DELETED.
7. CONNECTION TO PI.
8. DELETED.
9. NEAR BATCH REACTORS.
10. MUST BE LOCKED AT OPEN POSITION.

| TAG No. | A-20121A/B | T-20121A/B | F-20126 | P-20127 |
|---|---|---|---|---|
| Service | AGITATOR | STORAGE TANK | SUCTION FILTER | TRANSFER PUMP |
| Fluid | WASTE WATER | WASTE WATER | WASTE WATER | WASTE WATER |
| Size | 12 kW | 500 m3 | COARSE 3" | 50 m/h, 50 mLc |
| Mat. of const. | SS | CS EPOXY COATED | SS | SS |
| Remarks | EX. PROOF MOTOR | | | EX. PROOF MOTOR |

| no. | description | date | by | app. |
|---|---|---|---|---|
| P2 | INTERLOCKS UPDATE | 18.05.16 | Danuta | N.R. |
| P1 | FOR APPROVAL | 14.04.16 | Danuta | N.R. |
| P0 | PRELIMINARY | 15.11.15 | Danuta | N.R. |

REVISIONS

| | by | date |
|---|---|---|
| design.: | K.F. | 15.11.15 |
| drawn: | Danuta | 15.11.15 |
| check.: | N.R. | 15.11.15 |
| appr.: | | |

title: ELCON-USA

title: UNIT 20 STORAGE TANKS P & I DIAGRAM

proj. no: –

dwg. no: USA-20100-01-002

comp. dwg. no: USA-20100-01-002

issue: P2

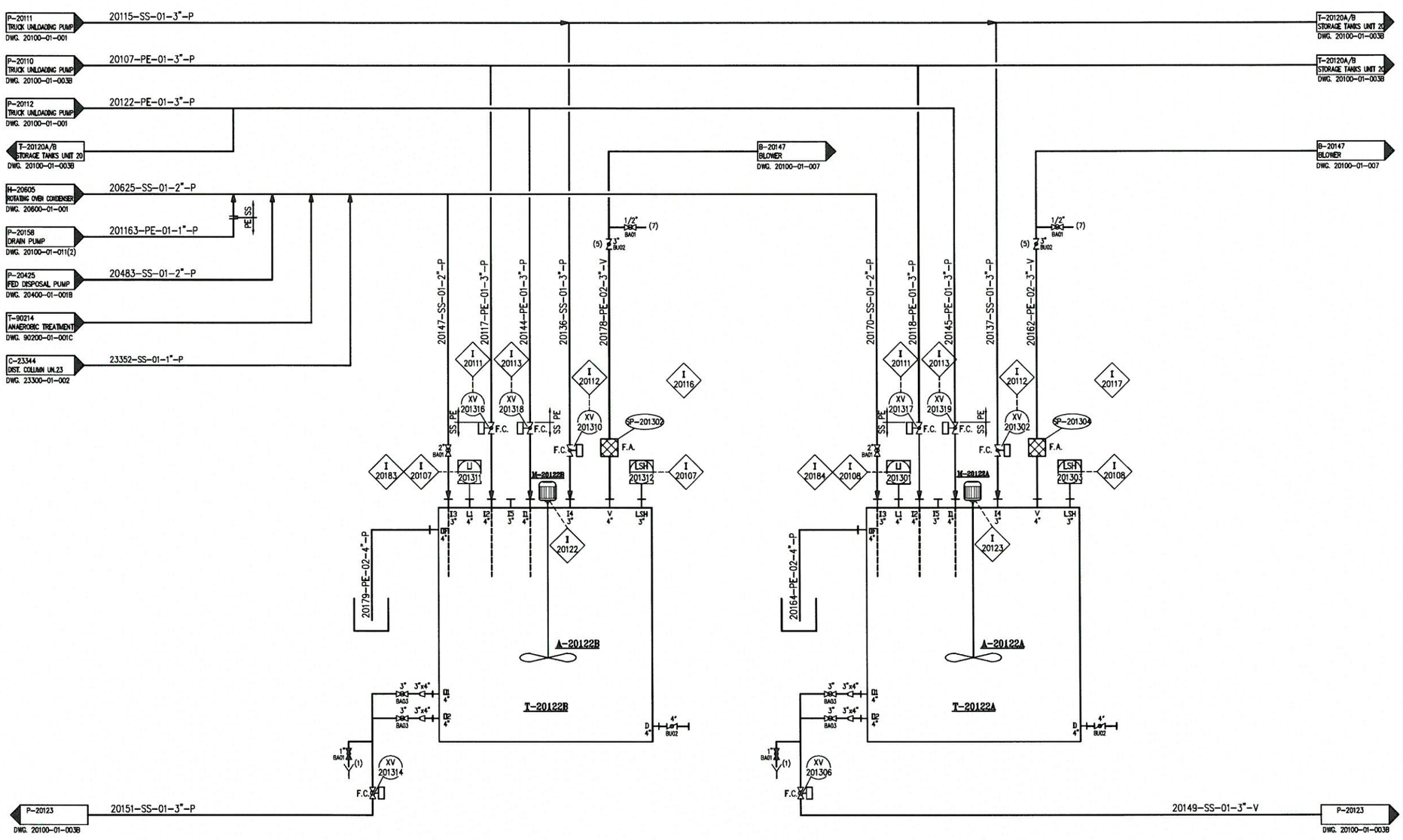


NOTES:

1. SAMPLE/DRAIN, POSSIBILITY TO TREATMENT IN BATCH REACTORS R-20206 / R-20210 / R-20214
2. DELETED.
3. DELETED.
4. DELETED.
5. LOCKED OPEN.
6. DELETED.
7. CONNECTION TO PI.

PRELIMINARY

| TAG No. | A-20122 A/B | T-20122 A/B |
|---|---|---|
| Service | AGITATOR | STORAGE TANKS |
| Fluid | WASTE WATER | WASTE WATER |
| Size | 12 kW | 500 m3 |
| Mat. of const. | SS | CS EPOXY COATED |
| Remarks | EX. PROOF MOTOR | |

| no. | description | date | by | app. |
|---|---|---|---|---|
| P2 | INTERLOCKS UPDATE | 18.05.16 | Danuta | N.R. |
| P1 | FOR APPROVAL | 14.04.16 | Danuta | N.R. |
| P0 | PRELIMINARY | 15.11.15 | Danuta | N.R. |

REVISIONS

| | by | date |
|---|---|---|
| design. | K.F. | 15.11.15 |
| drawn. | Danuta | 15.11.15 |
| check. | N.R. | 15.11.15 |
| appr. | | |

title: ELCON-USA

title: UNIT 20 CONENTRATED STORAGE TANKS P & I DIAGRAM

proj. no: –

dwg. no: USA-20100-01-003A

comp. dwg. no: USA-20100-01-003A

issue: P2

elcon

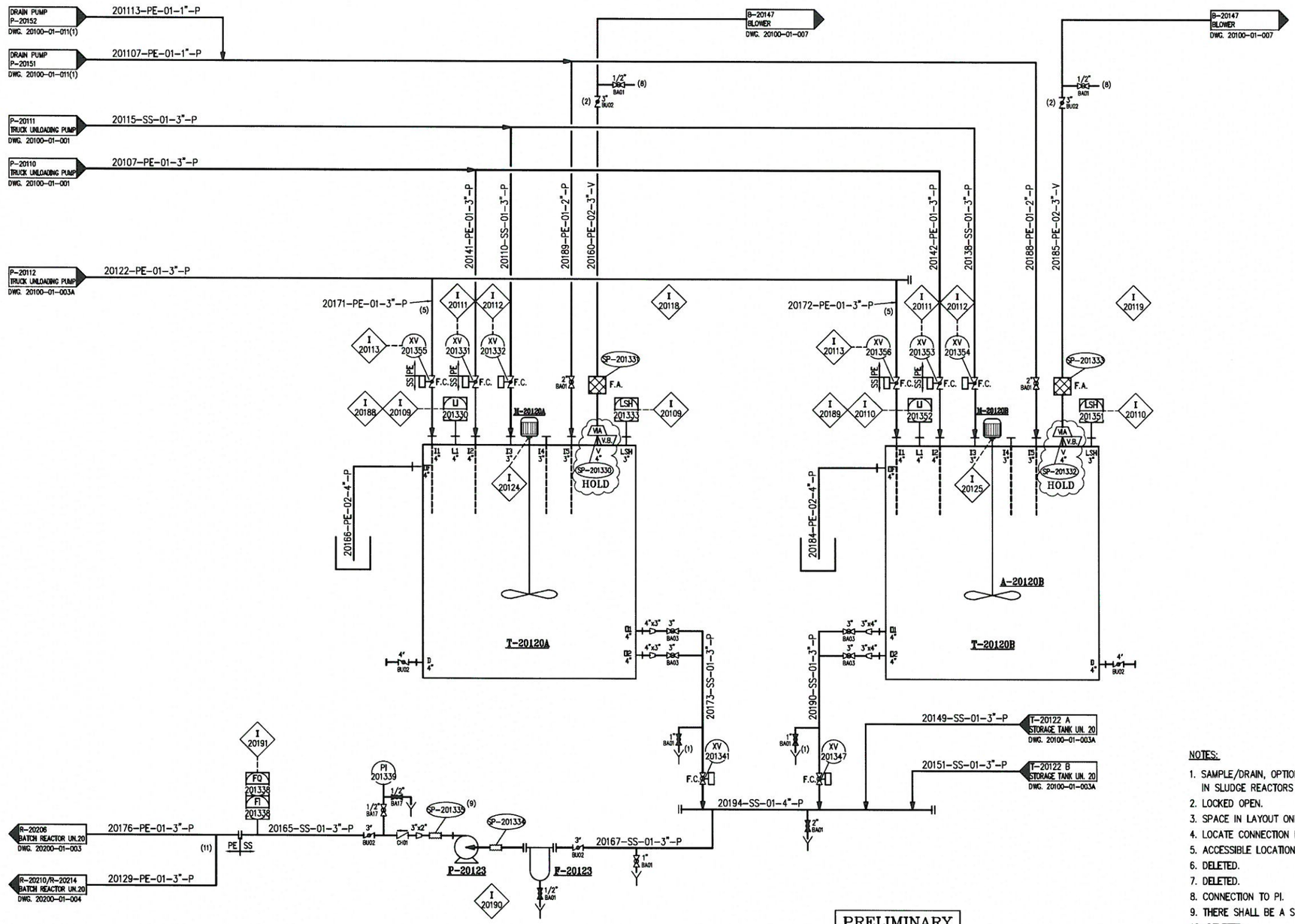


PRELIMINARY

NOTES:

1. SAMPLE/DRAIN, OPTION TO SENT FOR TREATMENT IN SLUDGE REACTORS
2. LOCKED OPEN.
3. SPACE IN LAYOUT ONLY.
4. LOCATE CONNECTION NEAR PROCESS CONTAINMENT.
5. ACCESSIBLE LOCATION.
6. DELETED.
7. DELETED.
8. CONNECTION TO PI.
9. THERE SHALL BE A SPARE PUMP IN WAREHOUSE.
10. DELETED.
11. TO BE LOCATED NEAR BATCH REACTORS.

| TAG No. | A-20120A/B | T-20120A/B | F-20123 | P-20123 |
|---|---|---|---|---|
| Service | AGITATOR | STORAGE TANK | SUCTION FILTER | TRANSFER PUMP |
| Fluid | WASTE WATER | WASTE WATER | WASTE WATER | WASTE WATER |
| Size | 12 kW | 500 m3 | COARSE 3" | 50 m3/h, 50mLc |
| Mat. of const. | SS | CS EPOXY COATED | SS | SS |
| Remarks | EX. PROOF MOTOR | | | EX. PROOF MOTOR |

| no. | description | date | by | app. |
|---|---|---|---|---|
| P1 | INTERLOCKS UPDATE | 18.05.16 | Danuta | N.R. |
| P0 | PRELIMINARY | 15.11.15 | Danuta | N.R. |

REVISIONS

| | by: | date: |
|---|---|---|
| design.: | K.F. | 15.11.15 |
| drawn.: | Danuta | 15.11.15 |
| check.: | N.R. | 15.11.15 |
| appr.: | | |

title: ELCON-USA

title: UNIT 20 STORAGE TANKS P & I DIAGRAM

proj. no: –

dwg. no: USA-20100-01-003B

comp. dwg. no: USA-20100-01-003B

issue: P1

elcon

J:\Y DJ\:Y PI&D\PRELIMINARY\UNIT 20\ALL REV\USA-20100-01-003B_P1.dwg, 30/05/2016 14:42:47

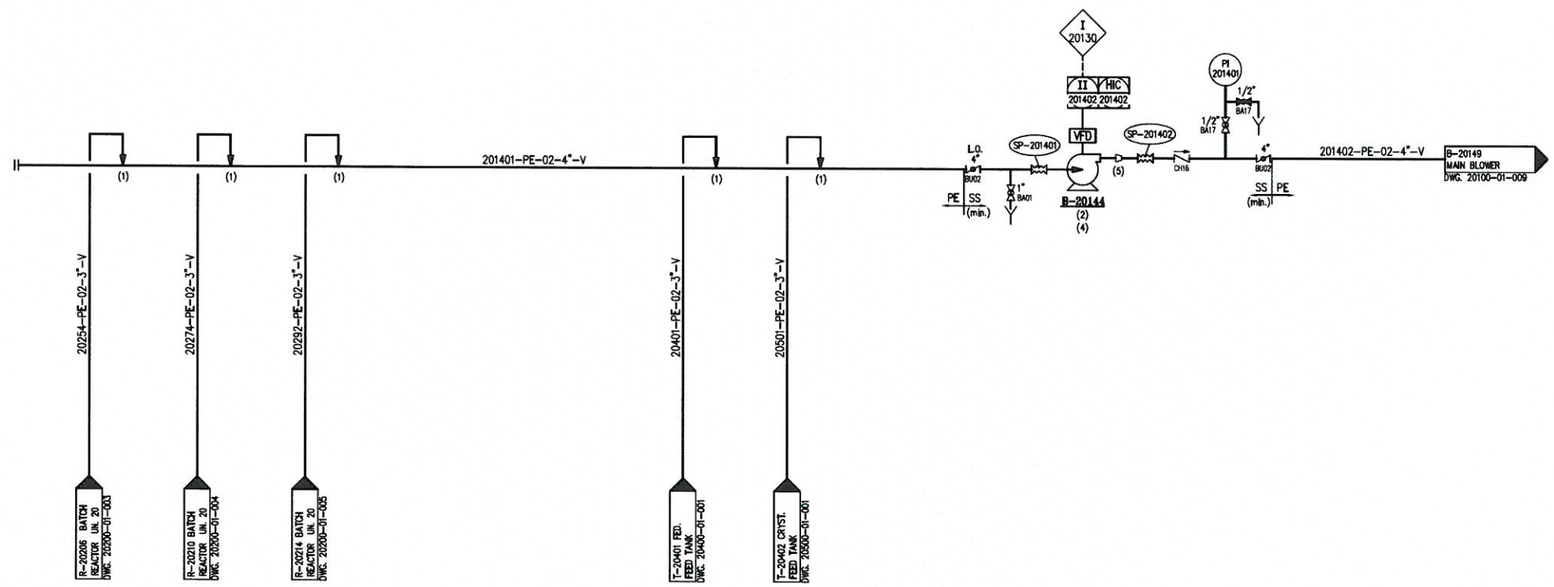


NOTES:

1. CONNECT WITH FLOW DIRECTION.
2. EX. PROOF MOTOR.
3. WILL NOT BE DESIGNED AT THIS STAGE.
4. EL. +14.00
5. REDUCER FROM SQUARE TO ROUND.

PRELIMINARY

| | |
|---|---|
| TAG No. | B-20144 |
| Service | BLOWER |
| Fluid | VAPORS |
| Size | 500 Nm3/h, 400 mm H20 |
| Mat. of const. | SS |
| Remarks | EX. PROOF MOTOR |

| no. | description | date | by | app. |
|---|---|---|---|---|
| P1 | INTERLOCKS UPDATE | 18.05.16 | Danuta | N.R. |
| P0 | PRELIMINARY | 15.11.15 | Danuta | N.R. |

REVISIONS

| | by: | date: |
|---|---|---|
| design.: | K.F. | 15.11.15 |
| drawn: | Danuta | 15.11.15 |
| check.: | N.R. | 15.11.15 |
| appr.: | | |

title: ELCON-USA

title: UNIT 20
VENT BLOWER FROM PRODUCTION AREA
P & I DIAGRAM

proj. no: –

dwg. no: USA-20100-01-004

comp. dwg. no: USA-20100-01-004

issue: P1

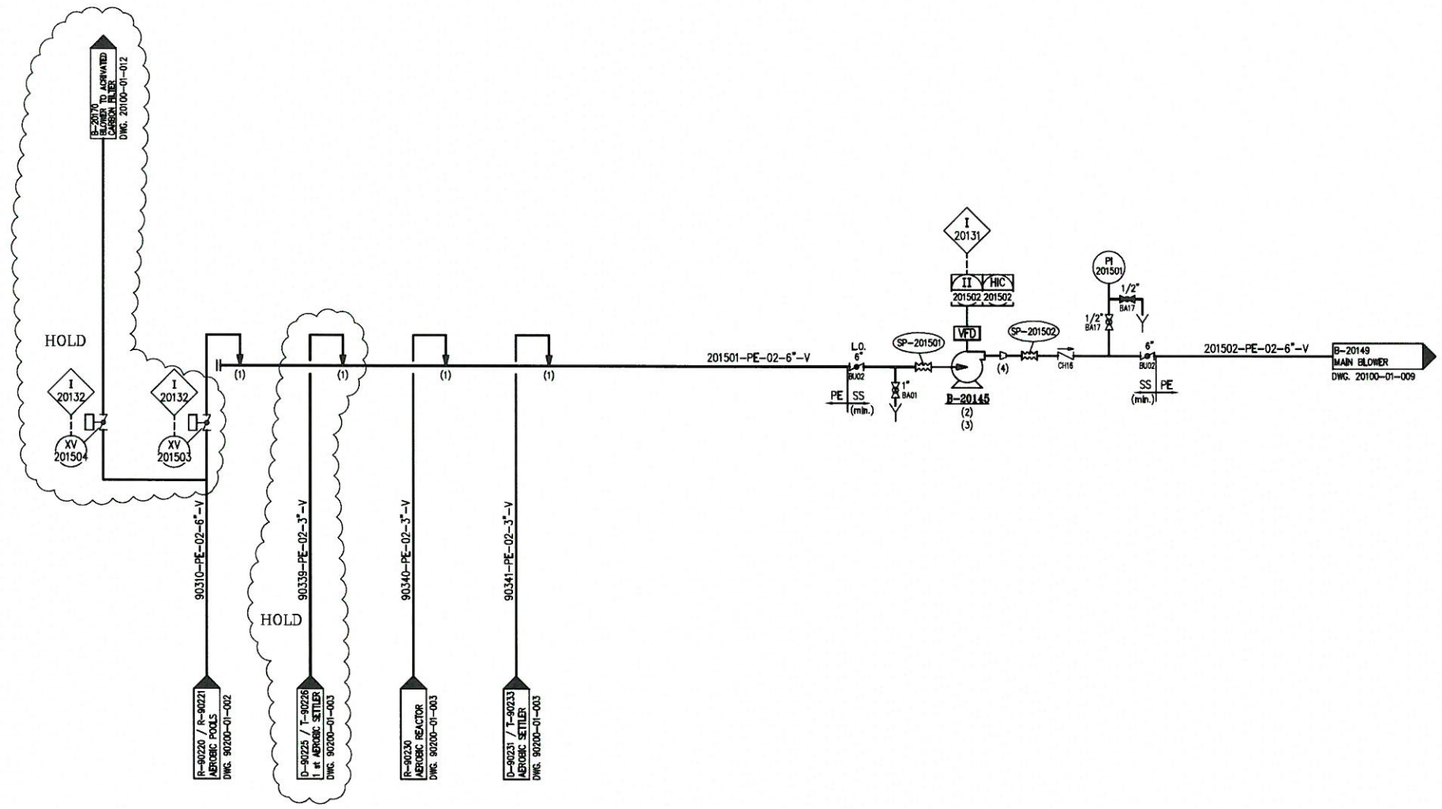


NOTES:

1. CONNECT WITH FLOW DIRECTION.
2. EX. PROOF MOTOR.
3. TO BE LOCATED ON TOP OF AEROBIC POOLS.
4. REDUCER FROM SQUARE TO ROUND.

PRELIMINARY

| TAG No. | B-20145 |
|---|---|
| Service | BLOWER |
| Fluid | BIO WASTE VAPORS |
| Size | 1000 Nm3/h, 400 mm H20 |
| Mat. of const. | SS |
| Remarks | |

| no. | description | date | by | app. |
|---|---|---|---|---|
| P1 | INTERLOCKS UPDATE | 18.05.16 | Danuta | N.R. |
| P0 | PRELIMINARY | 15.11.15 | Danuta | N.R. |

REVISIONS

| | by: | date: |
|---|---|---|
| design.: | K.F. | 15.11.15 |
| drawn: | Danuta | 15.11.15 |
| check.: | N.R. | 15.11.15 |
| appr.: | | |

title: ELCON-USA

title: UNIT 20
BIOLOGIC FARM BLOWER
P & I DIAGRAM

elcon

proj no: –
dwg. no: USA-20100-01-005
comp. dwg. no: USA-20100-01-005
issue: P1

J:\Y 5J\:Y\PI&D\PRELIMINARY\UNIT 20\ALL REV\USA-20100-01-005_P1.dwg, 30/05/2016 09:44:19

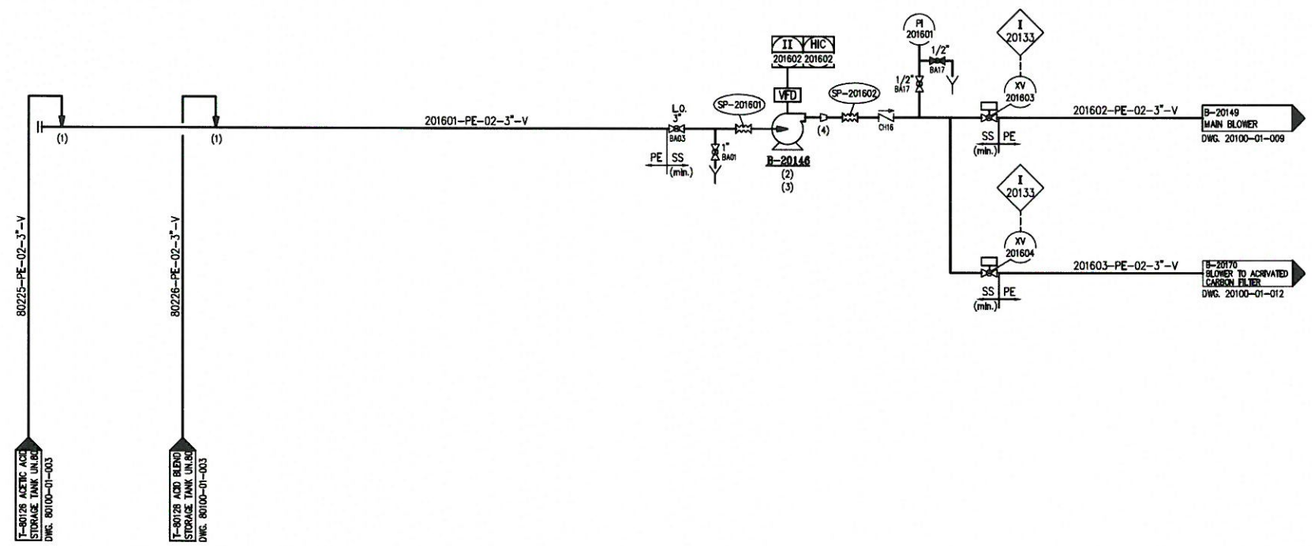


NOTES:

1. CONNECT WITH FLOW DIRECTION.
2. EX. PROOF MOTOR.
3. TO BE LOCATED ON CST PLATFORM.
4. REDUCER FROM SQUARE TO ROUND.

PRELIMINARY

| | |
|---|---|
| TAG No. | B-20146 |
| Service | BLOWER |
| Fluid | VAPORS OF ACIDS |
| Size | 100 Nm³/h 400 mm H20 |
| Mat. of const. | PP |
| Remarks | EX. PROOF MOTOR |

| no. | description | date | by | app. |
|---|---|---|---|---|
| P1 | INTERLOCKS UPDATE | 18.05.16 | Danuta | N.R. |
| P0 | PRELIMINARY | 15.11.15 | Danuta | N.R. |

REVISIONS

| | by: | date: |
|---|---|---|
| design.: | K.F. | 15.11.15 |
| drawn: | Danuta | 15.11.15 |
| check.: | N.R. | 15.11.15 |
| appr.: | | |

title: ELCON-USA

title: UNIT 20 TANK FARM BLOWER-ACIDIC WASTE P & I DIAGRAM

elcon

| proj. no | dwg. no: | issue: |
|---|---|---|
| – | USA-20100-01-006 | P1 |

comp. dwg. no: USA-20100-01-006

J:\:Y 5J\:Y\PI&D\PRELIMINARY\UNIT 20\ALL REV\USA-20100-01-006_P1.dwg, 30/05/2016 09:44:55

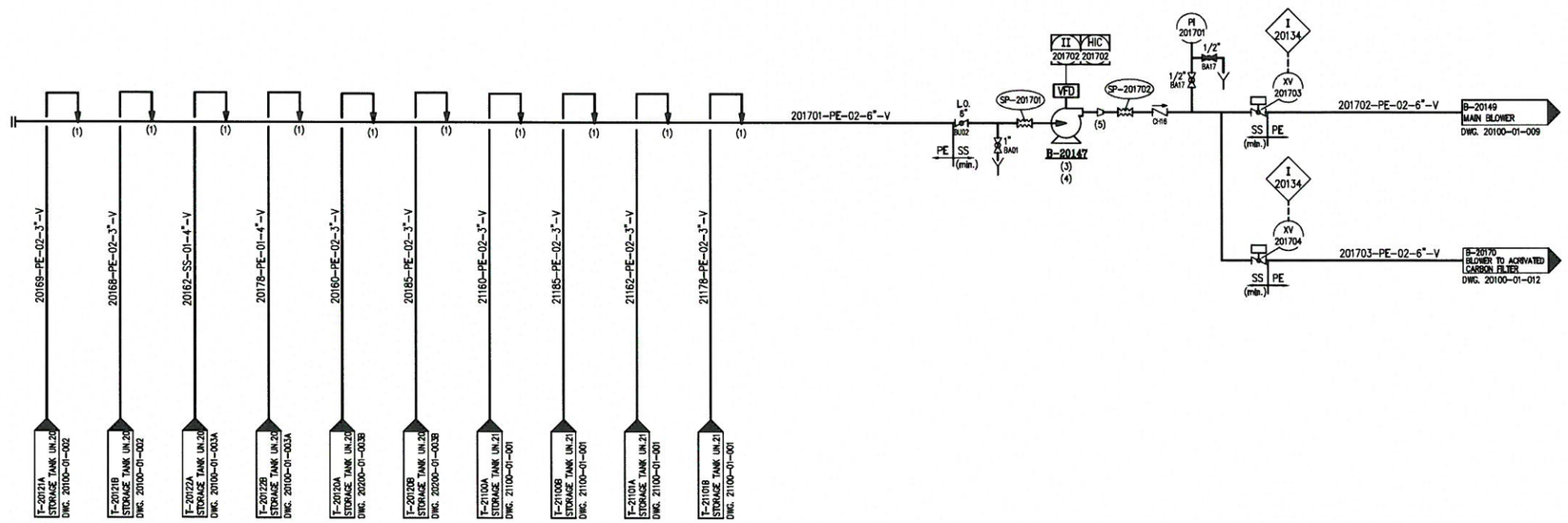


NOTES:

1. CONNECT WITH FLOW DIRECTION.
2. DELETED.
3. BLOWER SHALL BE EX. PROOF.
4. TO BE LOCATED ON CST PLATFORM.
5. REDUCER FROM SQUARE TO ROUND.

PRELIMINARY

| TAG No. | B-20147 |
|---|---|
| Service | BLOWER |
| Fluid | VAPORS OF CONC. WASTE WATER, OR ORGANICS |
| Size | 500 Nm3/h<br>400 mm H20 |
| Mat. of const. | SS |
| Remarks | MOTOR SHALL BE EX. PROOF |

| no. | description | date | by | app. |
|---|---|---|---|---|
| P1 | INTERLOCKS UPDATE | 18.05.16 | Danuta | N.R. |
| P0 | PRELIMINARY | 15.11.15 | Danuta | N.R. |

REVISIONS

| | by: | date: |
|---|---|---|
| design.: | K.F. | 15.11.15 |
| drawn: | Danuta | 15.11.15 |
| check.: | N.R. | 15.11.15 |
| appr.: | | |

title: ELCON-USA

title: UNIT 20 TANK FARM BLOWER P & I DIAGRAM

proj. no: –

dwg. no: USA-20100-01-007

issue: P1

comp. dwg. no: USA-20100-01-007

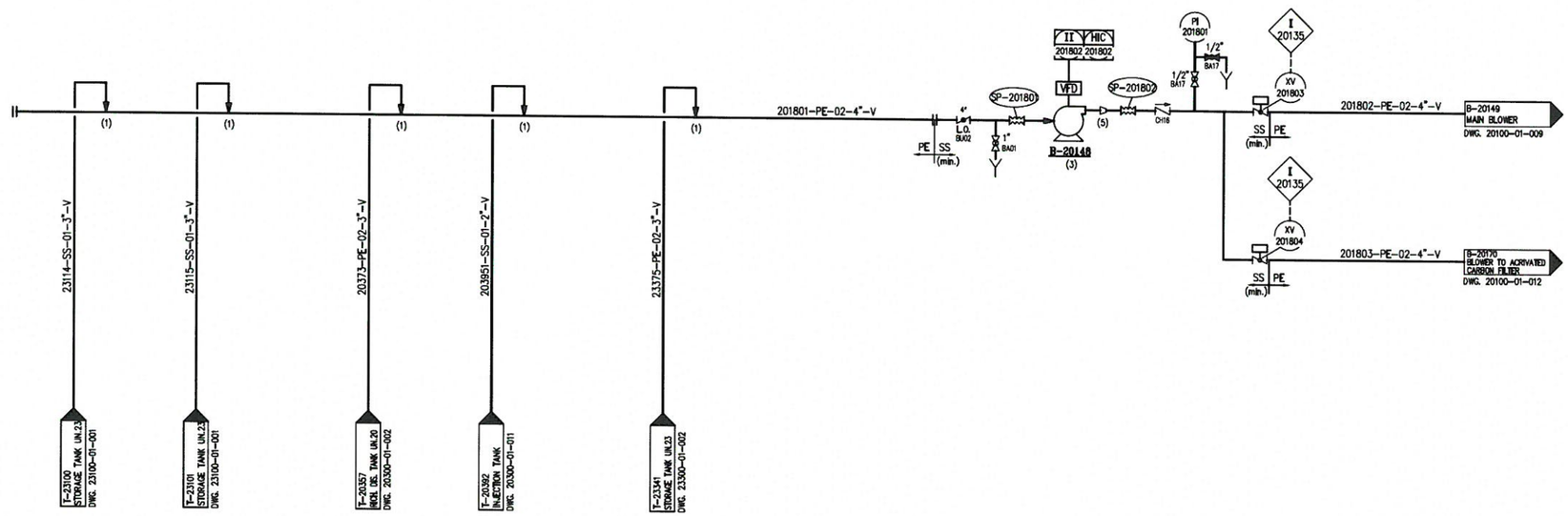


NOTES:

1. CONNECT WITH FLOW DIRECTION.
2. DELETED.
3. EX. PROOF BLOWER.
4. TO BE LOCATED ON CST PLATFORM.
5. REDUCER FROM SQUARE TO ROUND.

PRELIMINARY

| | |
|---|---|
| TAG No. | B-20148 |
| Service | BLOWER |
| Fluid | VAPORS OF ACIDS |
| Size | 200 Nm3/h<br>400 mm H20 |
| Mat. of const. | SS/ALUMINIUM |
| Remarks | EX. PROOF BLOWER |

| no. | description | date | by | app. |
|---|---|---|---|---|
| P2 | INTERLOCKS UPDATE | 18.05.16 | Danuta | N.R. |
| P1 | FOR APPROVAL | 14.04.16 | Danuta | N.R. |
| P0 | PRELIMINARY | 15.11.15 | Danuta | N.R. |

REVISIONS

| | by | date |
|---|---|---|
| design. | K.F. | 15.11.15 |
| drawn. | Danuta | 15.11.15 |
| check. | N.R. | 15.11.15 |
| appr. | | |

elcon engineering services

title: ELCON-USA

title: UNIT 20
TANK FARM BLOWER-ORGANIC WASTE
P & I DIAGRAM

proj. no: –

dwg. no: USA-20100-01-008

comp. dwg. no: USA-20100-01-008

issue: P2

Y:\D\PI&D\PRELIMINARY\LAST VERSIONS (ALL UNITS)\UNIT 20\USA-20100-01-008_P2.dwg, 16/02/2017 10:29:42

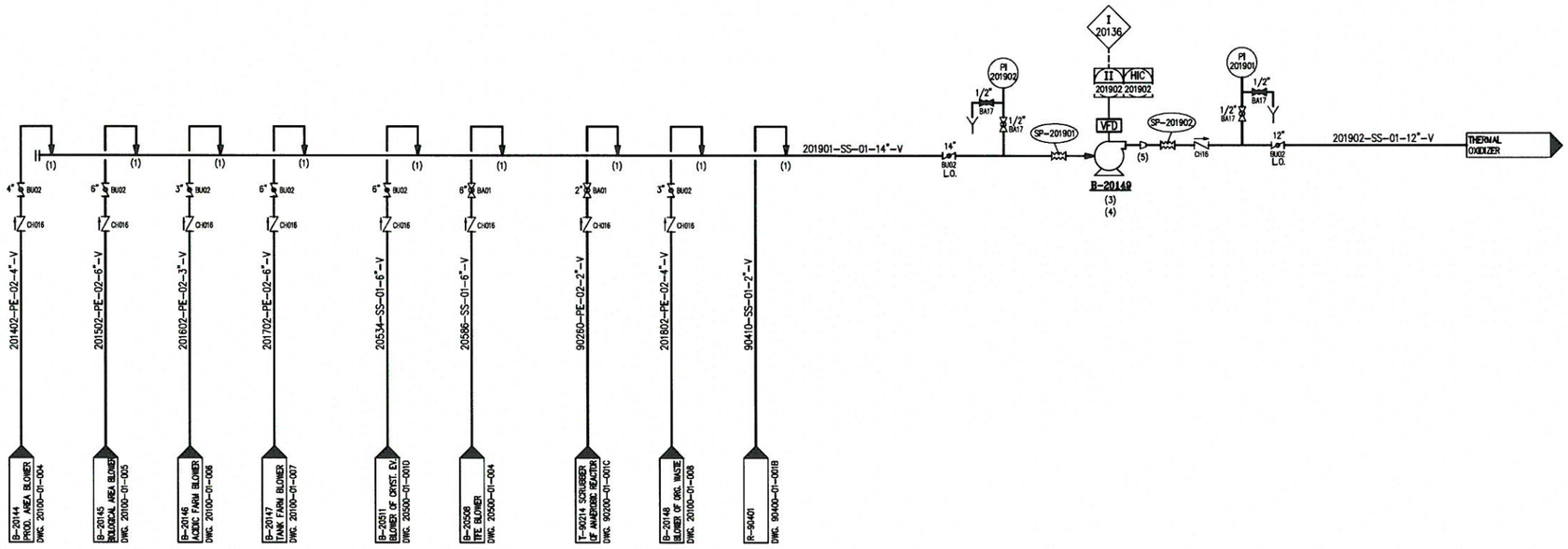


NOTES:

1. CONNECT WITH FLOW DIRECTION.
2. WILL NOT BE DESIGNED AT THIS STAGE.
3. EX. PROOF MOTOR.
4. TO BE LOCATED NEAR THERMAL OXYDIZER.
5. REDUCER FROM SQUARE TO ROUND.

PRELIMINARY

| TAG No. | B-20149 |
|---|---|
| Service | MAIN BLOWER |
| Fluid | VAPORS OF CONC. WASTE WATER OR ORGANICS |
| Size | 8000 Nm3/h 400 mm H2O |
| Mat. of const. | SS |
| Remarks | EX. PROOF MOTOR |

| no. מס | description תיאור | date תאריך | by מ | app. אש |
|---|---|---|---|---|
| P1 | INTERLOCKS UPDATE | 18.05.16 | Danuta | N.R. |
| P0 | PRELIMINARY | 15.11.15 | Danuta | N.R. |

REVISIONS הערות

| | by: מ | date: תאריך |
|---|---|---|
| design.: עצוב | K.F. | 15.11.15 |
| drawn: מרשם | Danuta | 15.11.15 |
| check.: בודק | N.R. | 15.11.15 |
| appr.: אשר | | |

title: שם הפרויקט ELCON-USA

title: שם הפרויקט UNIT 20 TANK FARM BLOWER P & I DIAGRAM

elcon engineering

| proj. no מספר | dwg. no: מספר | issue: הוצאה |
|---|---|---|
| – | USA-20100-01-009 | P1 |
| comp. dwg. no: מס' שרטוט מחשב | USA-20100-01-009 | |

)J\:Y 9J\:Y\PI&D\PRELIMINARY\UNIT 20\ALL REV\USA-20100-01-009_P1.dwg, 30/05/2016 09:47:01

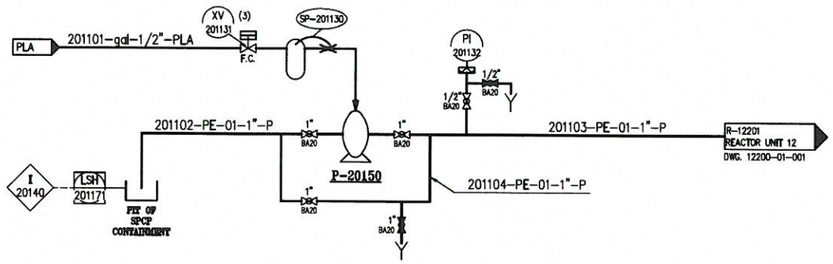


SUCTION FROM SPCP (UNIT 12) CONTAINMENT
SEE PIT No. 1 IN DWG. 20100-01-011(7)

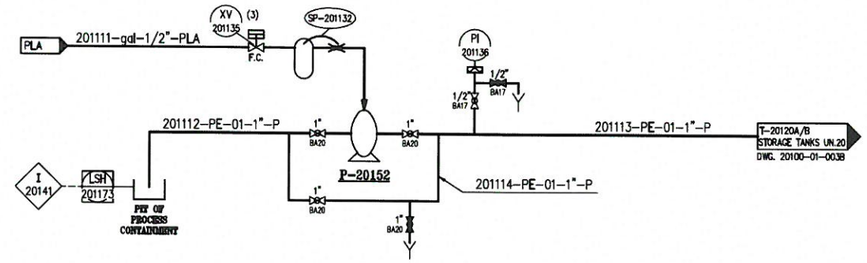


SUCTION FROM PROCESS CONTAINMENT
SEE PIT No. 12 IN DWG. 20100-01-011(7)

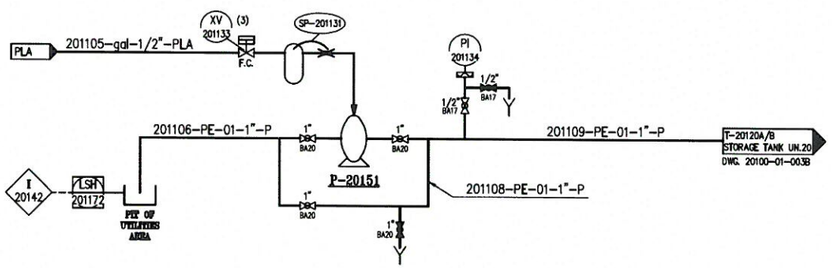


SUCTION FROM UTILITIES (UNIT 60) AREA
SEE PIT No. 2 IN DWG. 20100-01-011(7)

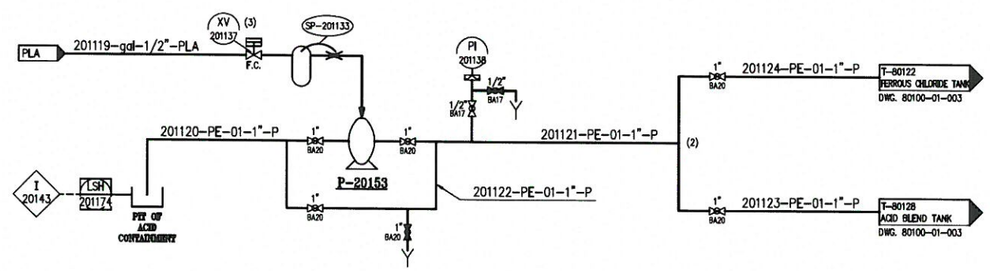


SUCTION FROM ACID CONTAINMENT
SEE PIT No. 3 IN DWG. 20100-01-011(7)

PRELIMINARY

NOTES:

1. SUCTION FROM PRODUCTION WHAREHOUSE, MAINTAINANCE, PRODUCTION SLUDGE SHALL BE DONE BY A MOBILE PUMP.
2. NEAR TANKS.
3. LOCAL WITH TIMER.

| TAG No. | P-20150 | P-20151 | P-20152 | P-20153 |
|---|---|---|---|---|
| Service | DRAIN PUMP | DRAIN PUMP | DRAIN PUMP | DRAIN PUMP |
| Fluid | WASTE WATER | WASTE WATER | WASTE WATER | WASTE WATER |
| Size | 1" AIR DIAPH. | 1" AIR DIAPH. | 1" AIR DIAPH. | 1" AIR DIAPH. |
| Mat. of const. | PP | PP | PP | PP |
| Remarks | | | | |

| no. | description | date | by | app. |
|---|---|---|---|---|
| P2 | INTERLOCKS UPDATE | 18.05.16 | Danuta | N.R. |
| P1 | FOR APPROVAL | 14.04.16 | Danuta | N.R. |
| P0 | PRELIMINARY | 15.11.15 | Danuta | N.R. |

REVISIONS

| | by: | date: |
|---|---|---|
| design.: | K.F. | 15.11.15 |
| drawn: | Danuta | 15.11.15 |
| check.: | N.R. | 15.11.15 |
| appr.: | | |

title: ELCON-USA

title: UNIT 20 PLANT DRAIN SYSTEM-1 P & I DIAGRAM

elcon

proj. no: –
dwg. no: USA-20100-01-011(1)
comp. dwg. no: USA-20100-01-011(1)
issue: P2

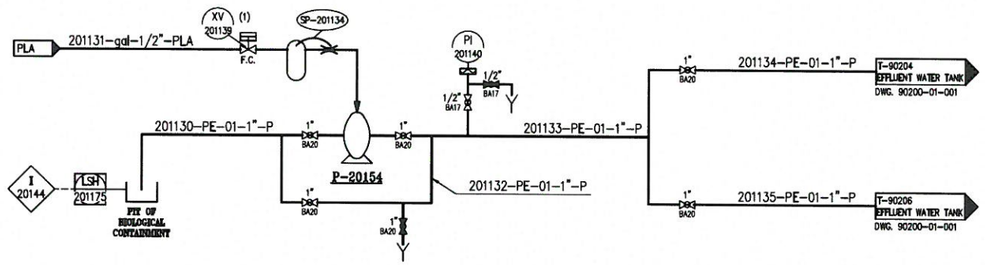


SUCTION FROM BIOLOGICAL TREATMENT CONTAINMENT
SEE PIT No. 4 IN DWG. 20100-01-011(7)

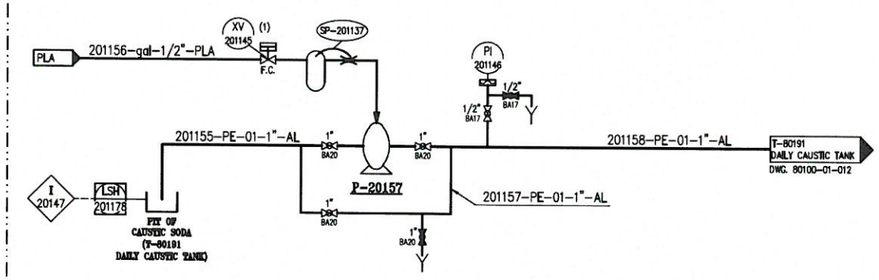


SUCTION FROM DAILY / CAUSTIC TANK
SEE PIT No. 7 IN DWG. 20100-01-011(7)

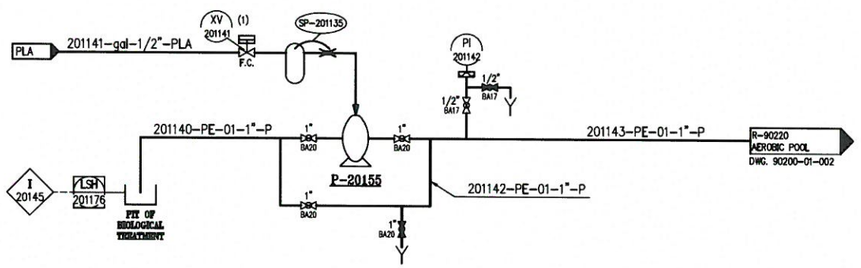


SUCTION FROM BIOLOGICAL TREATMENT
SEE PIT No. 5 IN DWG. 20100-01-011(7)

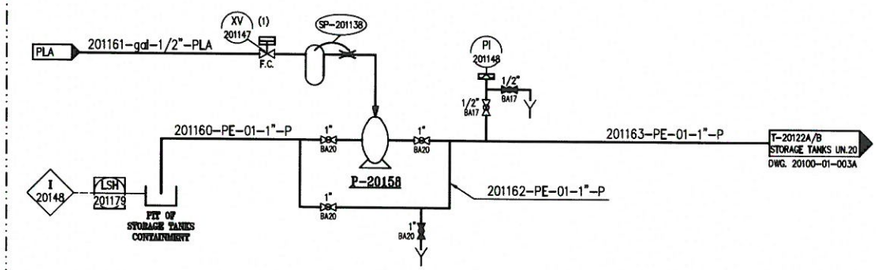


DRAIN OF STORAGE TANKS CONTAINMENT
SEE PIT No. 12 IN DWG. 20100-01-011(7)

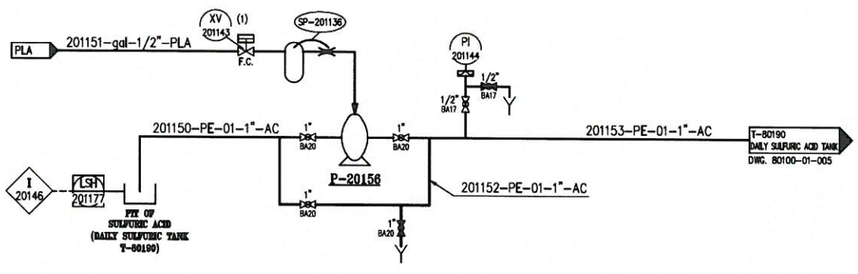


SUCTION FROM DAILY SULFURIC ACID TANK
SEE PIT No. 6 IN DWG. 20100-01-011(7)

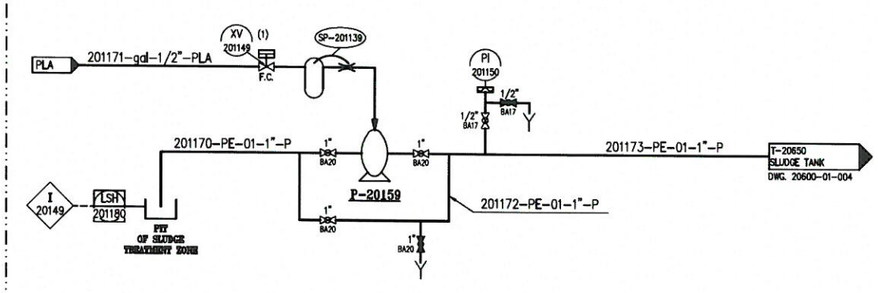


DRAIN OF SLUDGE TREATMENT ZONE (ZONE 20600)
SEE PIT No. 8 IN DWG. 20100-01-011(7)

PRELIMINARY

NOTES:

1. LOCAL WITH TIMER.

| TAG No. | P-20154 | P-20155 | P-20156 | P-20157 | P-20158 | P-20159 |
|---|---|---|---|---|---|---|
| Service | DRAIN PUMP | DRAIN PUMP | DRAIN PUMP | DRAIN PUMP | DRAIN PUMP | DRAIN PUMP |
| Fluid | WASTE WATER | WASTE WATER | WASTE WATER | WASTE WATER | WASTE WATER | WASTE WATER |
| Size | 1" AIR DIAPH. | 1" AIR DIAPH. | 1" AIR DIAPH. | 1" AIR DIAPH. | 1" AIR DIAPH. | 1" AIR DIAPH. |
| Mat. of const. | SS | SS | SS | SS | SS | SS |
| Remarks | | | | | | |

| no. | description | date | by | app. |
|---|---|---|---|---|
| P2 | INTERLOCKS UPDATE | 18.05.16 | Danuta | N.R. |
| P1 | FOR APPROVAL | 14.04.16 | Danuta | N.R. |
| P0 | PRELIMINARY | 15.11.15 | Danuta | N.R. |

REVISIONS

| | by: | date: |
|---|---|---|
| design.: | K.F. | 15.11.15 |
| drawn: | Danuta | 15.11.15 |
| check.: | N.R. | 15.11.15 |
| appr.: | | |

title: ELCON-USA

title: UNIT 20
PLANT DRAIN SYSTEM-2
P & I DIAGRAM

proj. no: –
dwg. no: USA-20100-01-011(2)
comp. dwg. no: USA-20100-01-011(2)
issue: P2

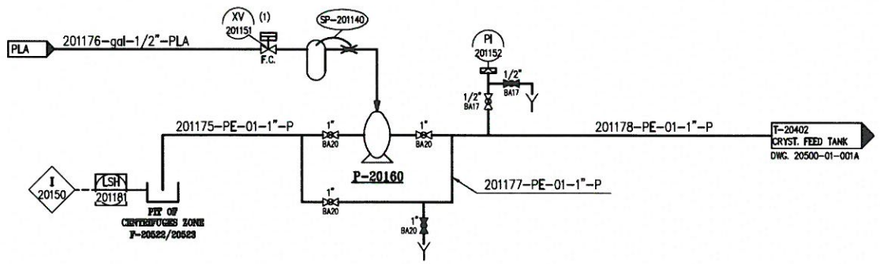


PRODUCTION PLANT-SUCTION FROM CENTRIFUGES (F-20522, F-20523) ZONE
SEE PIT No. 9 IN DWG. 20100-01-011(7)

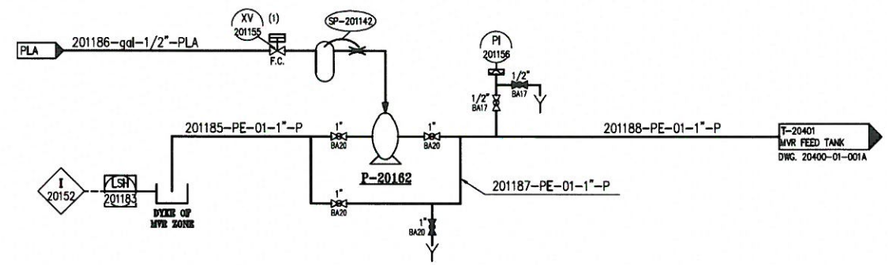


PRODUCTION PLANT-SUCTION FROM FED. ZONE (ZONE 20400)
SEE PIT No. 11 IN DWG. 20100-01-011(7)

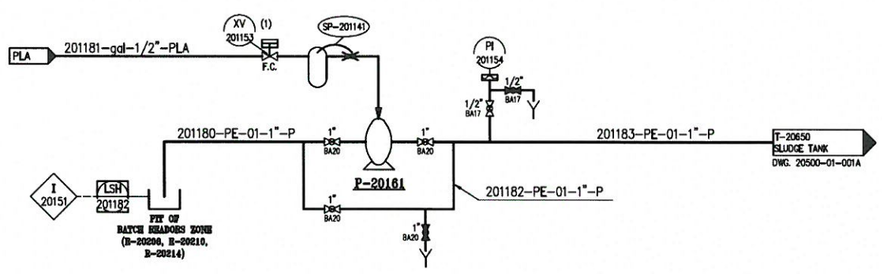


PRODUCTION PLANT-SUCTION FROM BATCH REACTORS ZONE
SEE PIT No. 10 IN DWG. 20100-01-011(7)

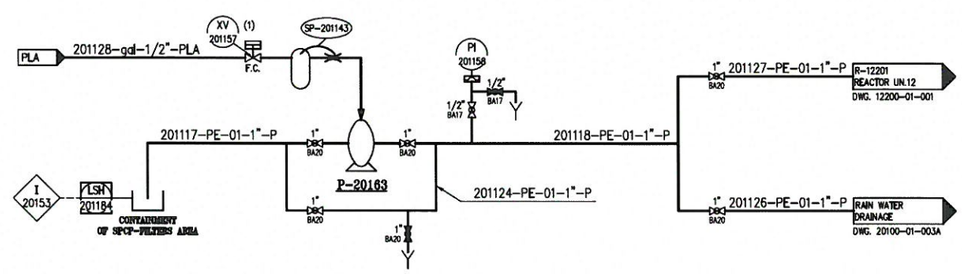


DRAIN OF SPCF-FILTERS AREA
SEE PIT No. 13 IN DWG. 20100-01-011(7)

PRELIMINARY

NOTES:

1. LOCAL WITH TIMER.

| TAG No. | P-20160 | P-20161 | P-20162 | P-20163 |
|---|---|---|---|---|
| Service | DRAIN PUMP | DRAIN PUMP | DRAIN PUMP | DRAIN PUMP |
| Fluid | WASTE WATER | WASTE WATER | WASTE WATER | WASTE WATER |
| Size | 1" AIR DIAPH. | 1" AIR DIAPH. | 1" AIR DIAPH. | 1" AIR DIAPH. |
| Mat. of const. | PP | PP | PP | PP |
| Remarks | | | | |

| no. | description | date | by | app. |
|---|---|---|---|---|
| P2 | INTERLOCKS UPDATE | 18.05.16 | Danuta | N.R. |
| P1 | FOR APPROVAL | 14.04.16 | Danuta | N.R. |
| P0 | PRELIMINARY | 15.11.15 | Danuta | N.R. |

REVISIONS

| | by | date |
|---|---|---|
| design.: | K.F. | 15.11.15 |
| drawn: | Danuta | 15.11.15 |
| check.: | N.R. | 15.11.15 |
| appr.: | | |

title: ELCON-USA

title: UNIT 20
PLANT DRAIN SYSTEM-3
P & I DIAGRAM

proj. no: –
dwg. no: USA-20100-01-011(3)
comp. dwg. no: USA-20100-01-011(3)
issue: P2

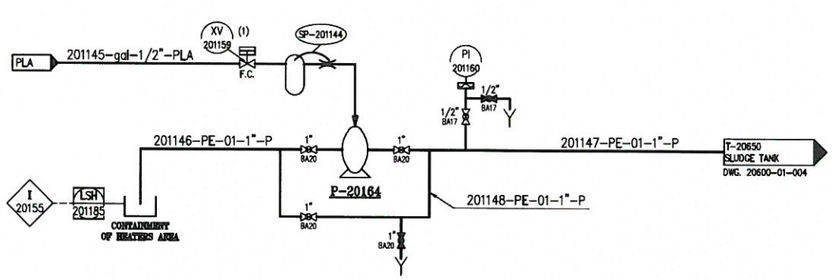


SUCTION FROM HEATERS AREA (20600)
SEE PIT No. 14 IN DWG. 20100-01-011(7)

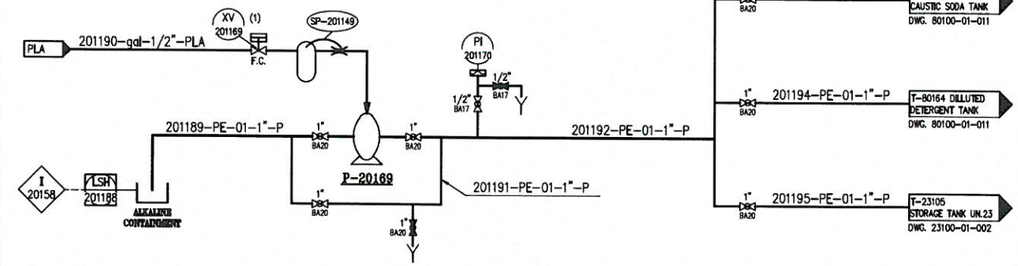


SUCTION FROM ALKALINE CONTAINMENT ZONE
SEE PIT No. 19 IN DWG. 20100-01-011(7)

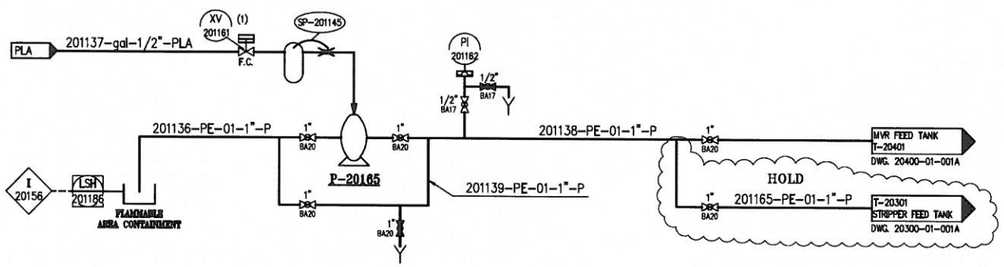


SUCTION FROM FLAMMABLE ZONE
SEE PIT No. 15 IN DWG. 20100-01-011(7)

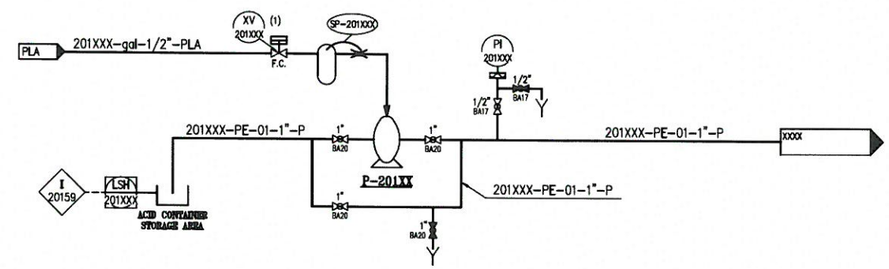


ACID CONTAINER STORAGE AREA
SEE PIT No. XX IN DWG. 20100-01-011(7)

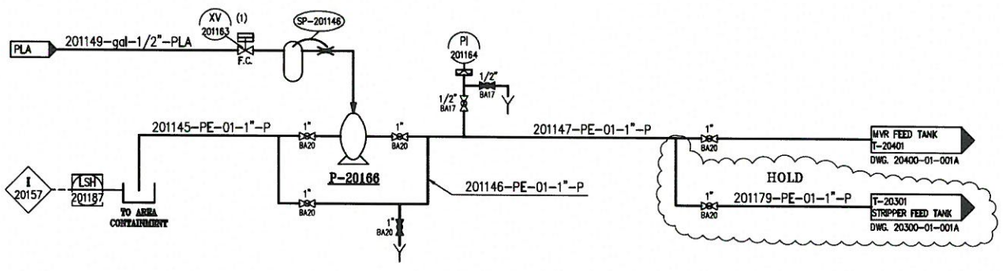


SUCTION FROM TO ZONE
SEE PIT No. 16 IN DWG. 20100-01-011(7)

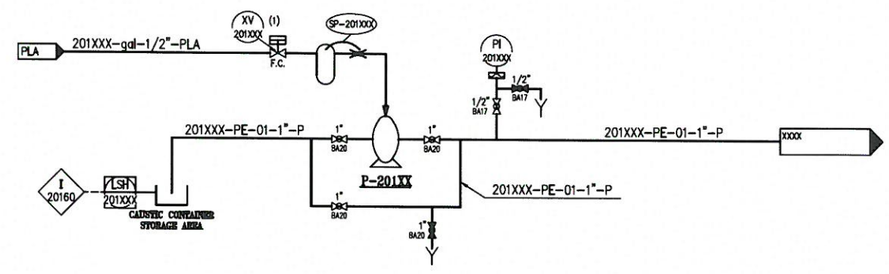


CAUSTIC CONTAINER STORAGE AREA
SEE PIT No. XX IN DWG. 20100-01-011(7)

PRELIMINARY

NOTES:

1. LOCAL WITH TIMER.

| TAG No. | P-20164 | P-20165 | P-20166 | P-20169 |
|---|---|---|---|---|
| Service | DRAIN PUMP | DRAIN PUMP | DRAIN PUMP | DRAIN PUMP |
| Fluid | WASTE WATER | WASTE WATER | WASTE WATER | WASTE WATER |
| Size | 1" AIR DIAPH. | 1" AIR DIAPH. | 1" AIR DIAPH. | 1" AIR DIAPH. |
| Mat. of const. | PP | PP | PP | PP |
| Remarks | | | | |

| no. | description | date | by | app. |
|---|---|---|---|---|
| P3 | CONTAINER STORAGE AREA PITS | 15.02.17 | Danuta | N.R. |
| P2 | INTERLOCKS UPDATE | 18.05.16 | Danuta | N.R. |
| P1 | FOR APPROVAL | 14.04.16 | Danuta | N.R. |
| P0 | PRELIMINARY | 15.11.15 | Danuta | N.R. |

REVISIONS

| | by: | date: |
|---|---|---|
| design.: | K.F. | 15.11.15 |
| drawn: | Danuta | 15.11.15 |
| check.: | N.R. | 15.11.15 |
| appr.: | | |

title: ELCON-USA

title: UNIT 20
PLANT DRAIN SYSTEM-2
P & I DIAGRAM

proj. no: –
dwg. no: USA-20100-01-011(4)
comp. dwg. no: USA-20100-01-011(4)
issue: P3

\\D\:Y DA\:Y\PI&D\PRELIMINARY\LAST VERSIONS (ALL UNITS)\UNIT 20\USA-20100-01-011(4) P3.dwg, 16/02/2017 15:07:46

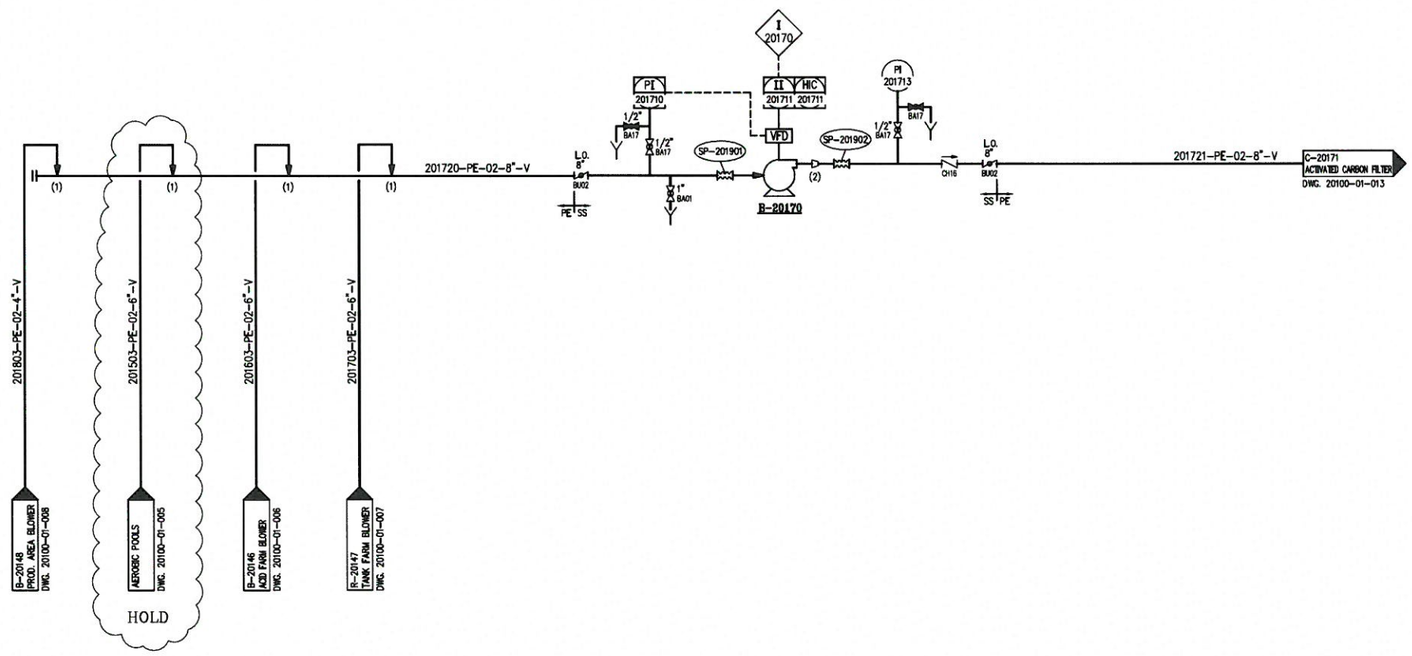


NOTES:

1. CONNECT WITH FLOW DIRECTION.
2. REDUCER FROM SQUARE TO ROUND.

PRELIMINARY

| | |
|---|---|
| TAG No. | B-20170 |
| Service | BLOWER TO CARBON FILTER |
| Fluid | EXHAUST AIR FROM TANK FARM |
| Size | 3000 Nm3/h, 500 mm H20 |
| Mat. of const. | SS |
| Remarks | EX. PROOF MOTOR |

| no. מס' | description תיאור | date תאריך | by ע' | app. אש |
|---|---|---|---|---|
| P1 | INTERLOCKS UPDATE | 18.05.16 | Danuta | N.R. |
| P0 | PRELIMINARY | 15.11.15 | Danuta | N.R. |

REVISIONS הערות

| | by: ע' | date: תאריך |
|---|---|---|
| design.: תכנון | K.F. | 15.11.15 |
| drawn: מצייר | Danuta | 15.11.15 |
| check.: בודק | N.R. | 15.11.15 |
| appr.: מאשר | | |

title: שם הפרויקט ELCON-USA

title: כותרת UNIT 20
BLOWER TO ACTIVATED CARBON FILTER
P & I DIAGRAM

elcon

| proj no פרויקט | dwg. no: מס' מפרט | issue: |
|---|---|---|
| – | USA-20100-01-012 | P1 |
| comp. dwg. no: מס' מפרט מחשב USA-20100-01-012 | | הוצאה |

D:\Y 9D\:Y\PI&D\PRELIMINARY\UNIT 20\ALL REV\USA-20100-01-012_P1.dwg, 30/05/2016 10:16:40

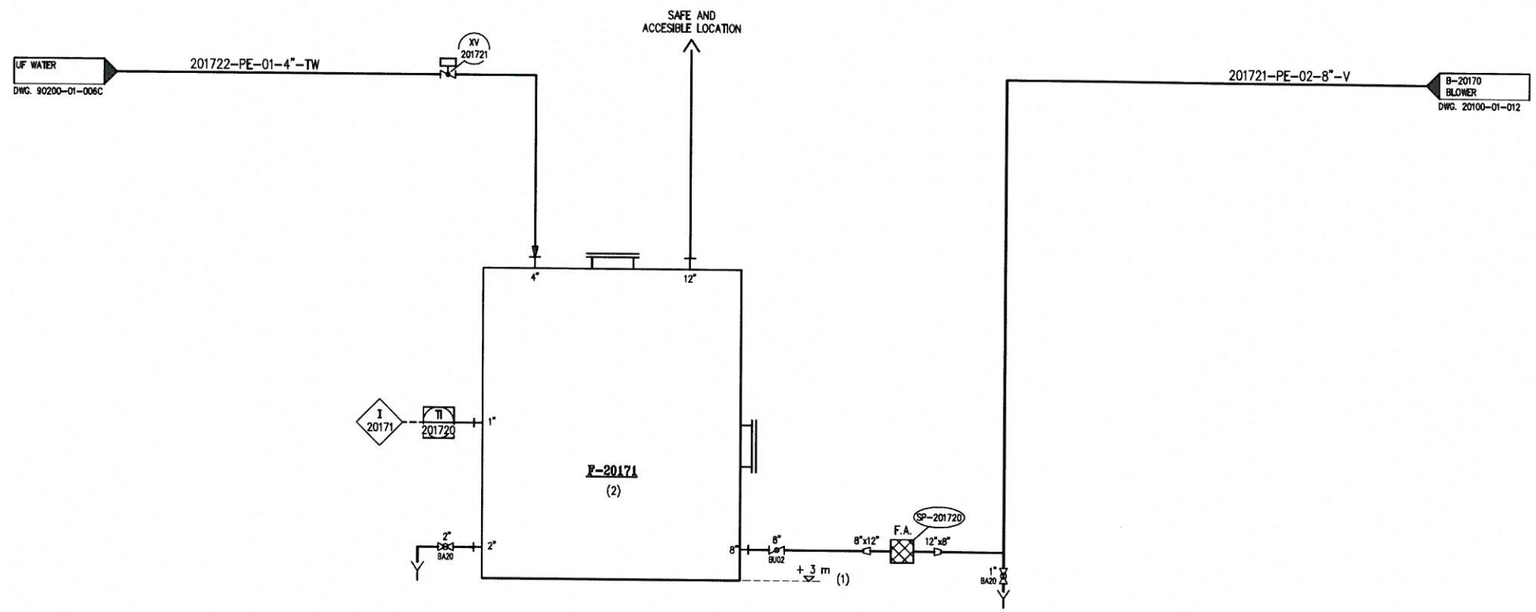


NOTES:

1. FILTER SHALL BE PLACED IN A POSITION THAT WILL ALLOW ACCESS FOR ACTIVE CARBON UNLOADING.
2. ACTIVE CARBON TYPE:
   ADDSORB VB1
   ECOSORB GXB.

PRELIMINARY

| | |
|---|---|
| TAG No. | F-20171 (2) |
| Service | ACTIVATED CARBON FILTER |
| Fluid | EXHAUST AIR FROM TANK FARM |
| Size | I.D.=1.83 m, H=2 m |
| Mat. of const. | PP |
| Remarks | 1 ton AC, MODEL: ECOFLOW EF-3000 |

| no. | description | date | by | app. |
|---|---|---|---|---|
| P1 | INTERLOCKS UPDATE | 18.05.16 | Danuta | N.R. |
| P0 | PRELIMINARY | 15.11.15 | Danuta | N.R. |

REVISIONS

| | by | date |
|---|---|---|
| design. | K.F. | 15.11.15 |
| drawn. | Danuta | 15.11.15 |
| check. | N.R. | 15.11.15 |
| appr. | | |

title: ELCON-USA

title: UNIT 20
ACTIVATED CARBON FILTER
P & I DIAGRAM

proj. no: –
dwg. no: USA-20100-01-013
comp. dwg. no: USA-20100-01-013
issue: P1

D:\:Y 9D\:Y\PI&D\PRELIMINARY\UNIT 20\ALL REV\USA-20100-01-013_P1.dwg, 30/05/2016 10:17:43

| | |
|---|---|
| I 20101 | IF NO GROUNDING, STOP PUMP P-20110 |
| I 20102 | IF NO GROUNDING, CLOSE VALVE XV-201109 |
| I 20103 | IF NO GROUNDING, STOP PUMP P-20111 |
| I 20104 | IF NO GROUNDING, STOP PUMP P-20112 |
| I 20105 | IF LI-201207 IS HIGH HIGH OR LSH-201210 IS ON, CLOSE XV-201201, XV-201202, XV-201218 AND COMPATIBLE PUMP |
| I 20106 | IF LI-201206 IS HIGH HIGH OR LSH-201211 IS ON, CLOSE XV-201203, XV-201204, XV-201219 AND COMPATIBLE PUMP |
| I 20107 | IF LI-201311 IS HIGH HIGH OR LSH-201312 IS ON, CLOSE XV-201310, XV-201316, XV-201318 AND COMPATIBLE PUMP |
| I 20108 | IF LI-201301 IS HIGH HIGH OR LSH-201303 IS ON, CLOSE XV-201302, XV-201317, XV-201319 AND COMPATIBLE PUMP |
| I 20109 | IF LI-201330 IS HIGH HIGH OR LSH-201333 IS ON, CLOSE XV-201331, XV-201332, XV-201355 AND COMPATIBLE PUMP |
| I 20110 | IF LI-201352 IS HIGH HIGH OR LSH-201351 IS ON, CLOSE XV-201353, XV-201354, XV-201356 AND COMPATIBLE PUMP |
| I 20111 | ONLY ONE VALVE CAN BE OPEN AT ANY TIME. IF ALL VALVES ARE CLOSE, CLOSE P-20110 |
| I 20112 | ONLY ONE VALVE CAN BE OPEN AT ANY TIME. IF ALL VALVES ARE CLOSE, CLOSE P-20111 |
| I 20113 | ONLY ONE VALVE CAN BE OPEN AT ANY TIME. IF ALL VALVES ARE CLOSE, CLOSE P-20112 |
| I 20119 ÷ I 20114 | ONLY ONE FILLING VALVE TO TANK CAN BE OPEN AT THE SAME TIME |
| I 20125 ÷ I 20120 | IF LEVEL ALARM IS LOW LOW, STOP AGITATOR AT COMPATIBLE TANK |
| I 20130 | IF B-20149 IS NOT RUNNING, STOP B-20144 |
| I 20131 | IF B-20149 IS NOT RUNNING, STOP B-20145 |
| I 20132 | IF B-20149 IS NOT RUNNING, CLOSE XV-201503 AND OPEN XV-201504 |
| I 20133 | IF B-20149 IS NOT RUNNING, CLOSE XV-201603 AND OPEN XV-201604 |
| I 20134 | IF B-20149 IS NOT RUNNING, CLOSE XV-201703 AND OPEN XV-201704 |
| I 20135 | IF B-20149 IS NOT RUNNING, CLOSE XV-201803 AND OPEN XV-201804 |
| I 20136 | WHEN T.O. IS NOT ON TEMP., STOP B-20149 |

| | |
|---|---|
| P1 I 20160 ÷ I 20140 | OPEN PUMP VALVE ON LSH |
| I 20170 | START WHEN B-20149 IS NOT RUNNING, STOP WHEN B-20149 IS RUNNING |
| I 20171 | ON TI HIGH, STOP B-20170 AND OPEN XV-201721 |
| I 20180 | ALLOW UNLOADING ONLY AFTER LAB APPROVAL |
| I 20181 | ALLOW UNLOADING ONLY AFTER LAB APPROVAL |
| I 20182 | ALLOW UNLOADING ONLY AFTER LAB APPROVAL |
| I 20183 | IF LI-201311 IS LOW LOW, CLOSE XV-201314 |
| I 20184 | IF LI-201301 IS LOW LOW, CLOSE XV-201306 |
| I 20185 | IF LI-201207 IS LOW LOW, CLOSE XV-201213 |
| I 20186 | IF LI-201206 IS LOW LOW, CLOSE XV-201214 |
| I 20187 | IF VALVES XV-201213 AND XV-201214 ARE CLOSE, CLOSE P-20127 |
| I 20188 | IF LI-201330 IS LOW LOW, CLOSE XV-201341 |
| I 20189 | IF LI-201352 IS LOW LOW, CLOSE XV-201347 |
| I 20190 | IF VALVES XV-201306, XV-201314, XV-201341 AND XV-201347 ARE CLOSE, CLOSE P-20123 |
| I 20191 | IF FI-201338 INDICATE LOW LOW FLOW, CLOSE P-20123 |
| I 20192 | IF FI-201217 INDICATE LOW LOW FLOW, CLOSE P-20127 |

PRELIMINARY

| no. | description | date | by | app. |
|---|---|---|---|---|
| P1 | CONTAINER STORAGE AREA | 15.02.17 | Danuta | N.R. |
| P0 | PRELIMINARY | 18.05.16 | Danuta | N.R. |

REVISIONS

| | by: | date: |
|---|---|---|
| design.: | K.F. | 18.05.16 |
| drawn: | Danuta | 18.05.16 |
| check.: | N.R. | 18.05.16 |
| appr.: | | |

title: ELCON-USA

title: UNIT 20 AREA 100 INTERLOCKS LIST

proj. no: –

dwg. no: USA-20100-01-020

comp. dwg. no: USA-20100-01-020

issue: P1

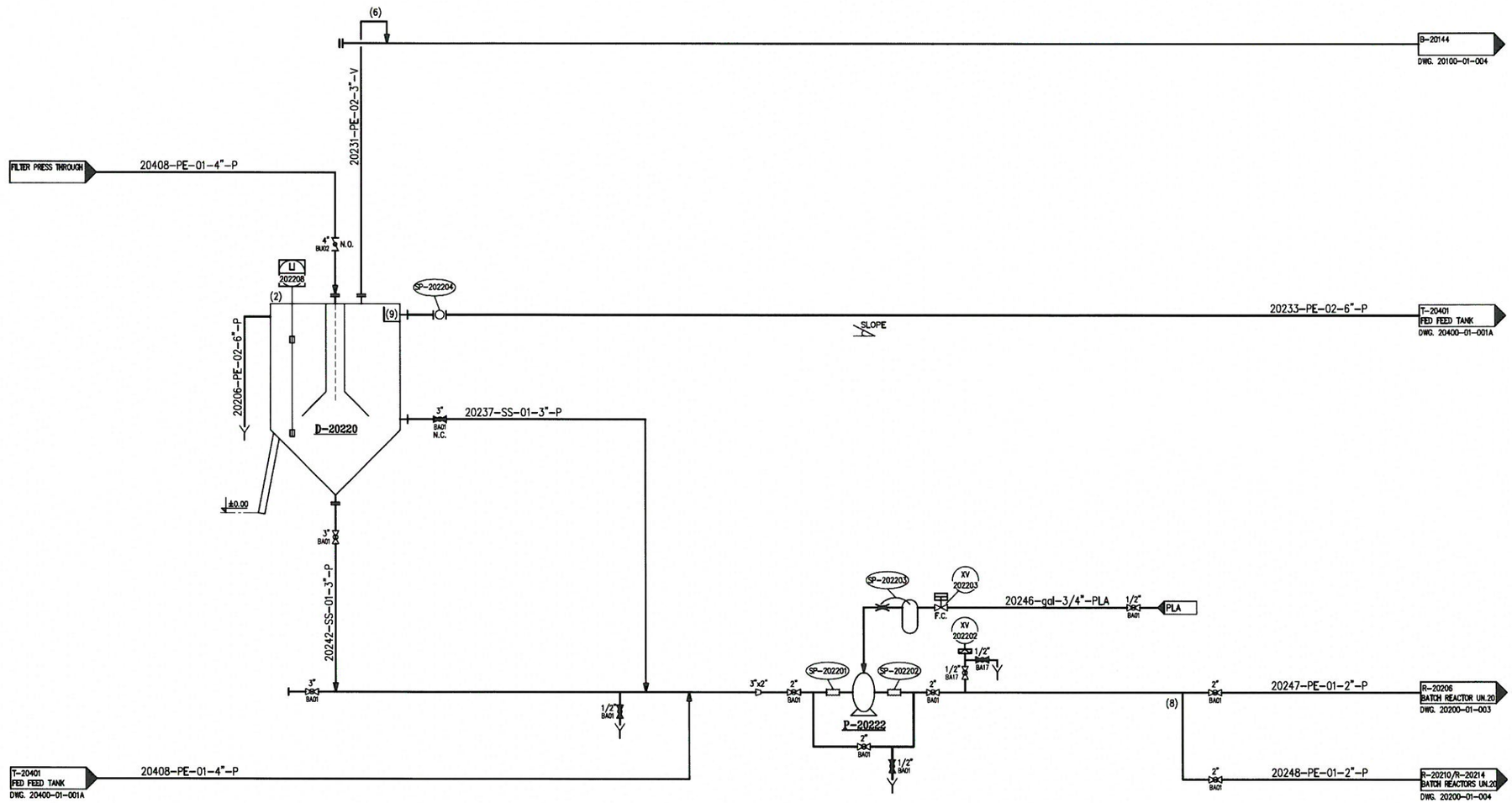


NOTES:

1. DELETED.
2. LI FOR SLUDGE HEIGHT.
3. DELETED.
4. DELETED.
5. DELETED.
6. TO BE CONNECTED WITH FLOW DIRECTION.
7. DELETED.
8. LOCATION NEAR BATCH REACTORS
9. PERIPHERAL THROUGH
10. DELETED.
11. DELETED.
12. DELETED.

| TAG No. | D-20220 | P-20222 |
|---|---|---|
| Service | WASTE WATER CLARIFIER | CLARIFIED BOTTOM PUMP |
| Fluid | WASTE WATER | WASTE WATER |
| Size | 100 m3 | 2" AIR DIAPHRAGM |
| Mat. of const. | CS | SS |
| Remarks | EXIST. WAS T-103A IN DESHANIM PLANT | |

| no. מס' | description | date תאריך | by ע | qp. אש |
|---|---|---|---|---|
| P1 | UPDATE | 03.08.16 | Danuta | N.R. |
| P0 | PRELIMINARY | 08.08.16 | Danuta | N.R. |

REVISIONS תיקונים

| | by: ע | date: תאריך |
|---|---|---|
| design.: תכנן | K.F. | 08.08.16 |
| drawn: נשרטט | Danuta | 08.08.16 |
| check.: בדק | | |
| appr.: נאשר | N.R. | 08.08.16 |

title: שם הפרויקט ELCON-USA

title: שם תת-פרויקט UNIT 20 SETTLERS P & I DIAGRAM

proj. no מספר פרויקט: –

dwg. no: מספר שרטוט: USA-20200-01-002

comp. dwg. no: מס. שרטוט מחשב USA-20200-01-002

issue: מהדורה P1

elcon engineering center

:\מ\:Y מ\:Y\PI&D\PRELIMINARY\LAST VERSIONS (ALL UNITS)\UNIT 20\ILH-20200-01-002_P1.dwg, 16/02/2017 15:04:47

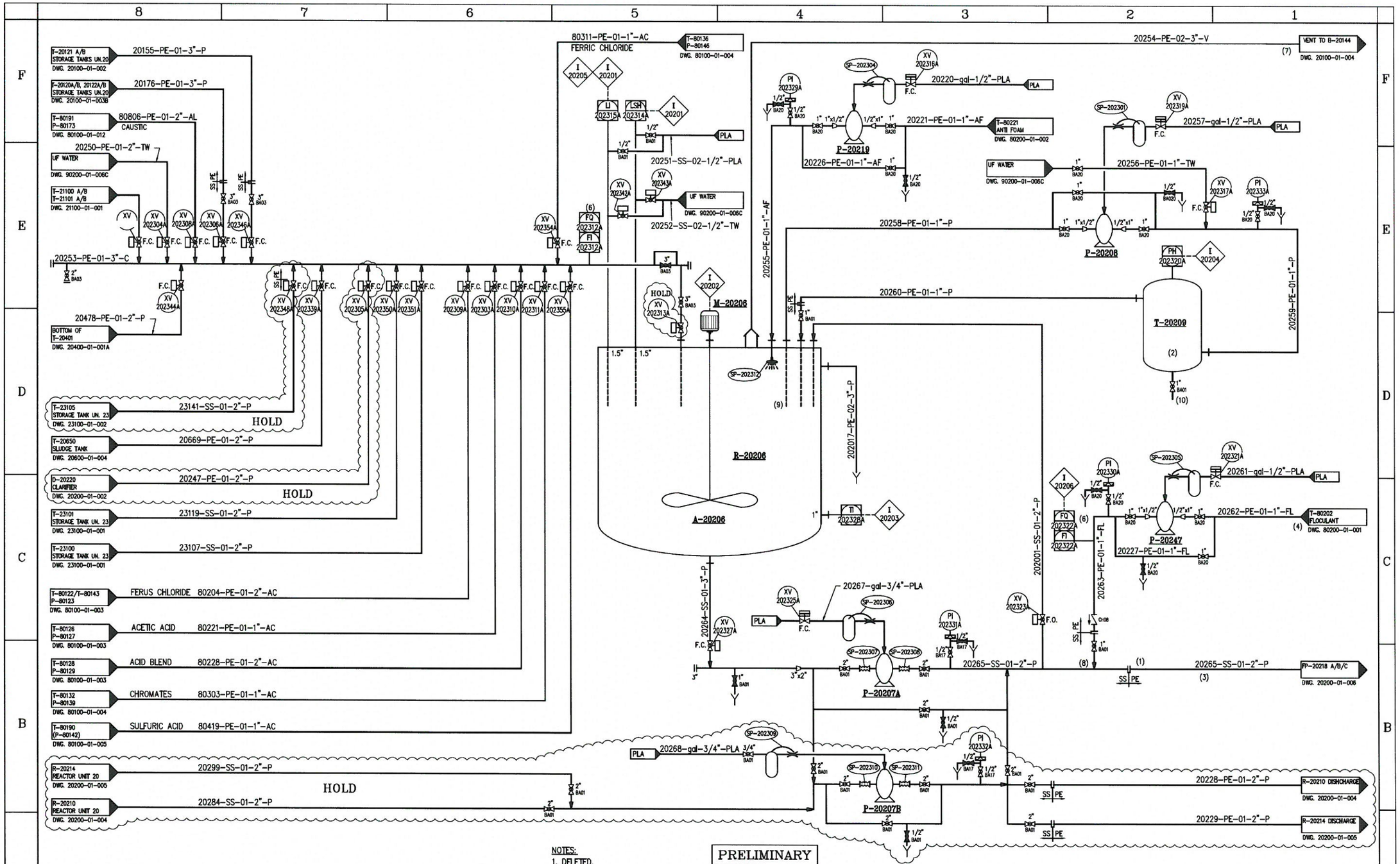


PRELIMINARY

NOTES:
1. DELETED.
2. MAINTANANCE ACCESS.
3. TURBULENT FLOW.
4. OPTION – DIRECT INLET TO REACTOR.
5. DELETED.
6. MAGNETIC FLOW INDICATOR WILL BE LOCATED. 5D DOWNSTREAM AND 10D UPSTREAM.
7. TO BE LOCATED WITH FLOW DIRECTION.
8. CONNECTION WITH INJECTOR.
9. SUCTION AT AGITATING LEVEL.
10. DRAIN TO REACTOR.

| TAG No. | A-20206 | M-20206 | P-20207A/B (HOLD) | P-20208 | P-20219 | P-20247 | R-20206 | T-20209 |
|---|---|---|---|---|---|---|---|---|
| Service | AGITATOR | MOTOR | TRANSFER PUMMP | PH LOOP PUMP | ANTI FOAM PUMP | FLOCULANT PUMP | REACTOR | PH VESSEL |
| Fluid | | | SLUDGE | SLUDGE | ANTI FOAM | FLOCULANT | SLUDGE | SLUDGE |
| Size | | 10 HP | 2" air diaph. | 0.5" air diaph. | 0.5" air diaph. | 0.5" air diaph. | 50 m3 | H=0.5m, D=0.2m |
| Mat. of const. | | | SS | PP | PP | PP | SS | SS |
| Remarks | | | | | | | EXIST. | |

| no. | description | date | by | sys. |
|---|---|---|---|---|
| P1 | INTERLOCKS UPDATE | 18.05.16 | Danuta | N.R. |
| P0 | PRELIMINARY | 15.11.15 | Danuta | N.R. |

REVISIONS

| | by: | date: |
|---|---|---|
| design.: | K.F. | 15.11.15 |
| drawn.: | Danuta | 15.11.15 |
| check.: | N.R. | 15.11.15 |
| appr.: | | |

title: ELCON-USA

title: UNIT 20 NON CONTINUOUS REACTOR R-20206 P & I DIAGRAM

proj no: –
dwg. no: USA-20200-01-003
comp. dwg. no: USA-20200-01-003
issue: P1

elcon

D:\Y SD\:Y\PI&D\PRELIMINARY\LAST VERSIONS (ALL UNITS)\UNIT 20\USA-20200-01-003_P1.dwg, 15/06/2016 10:24:54

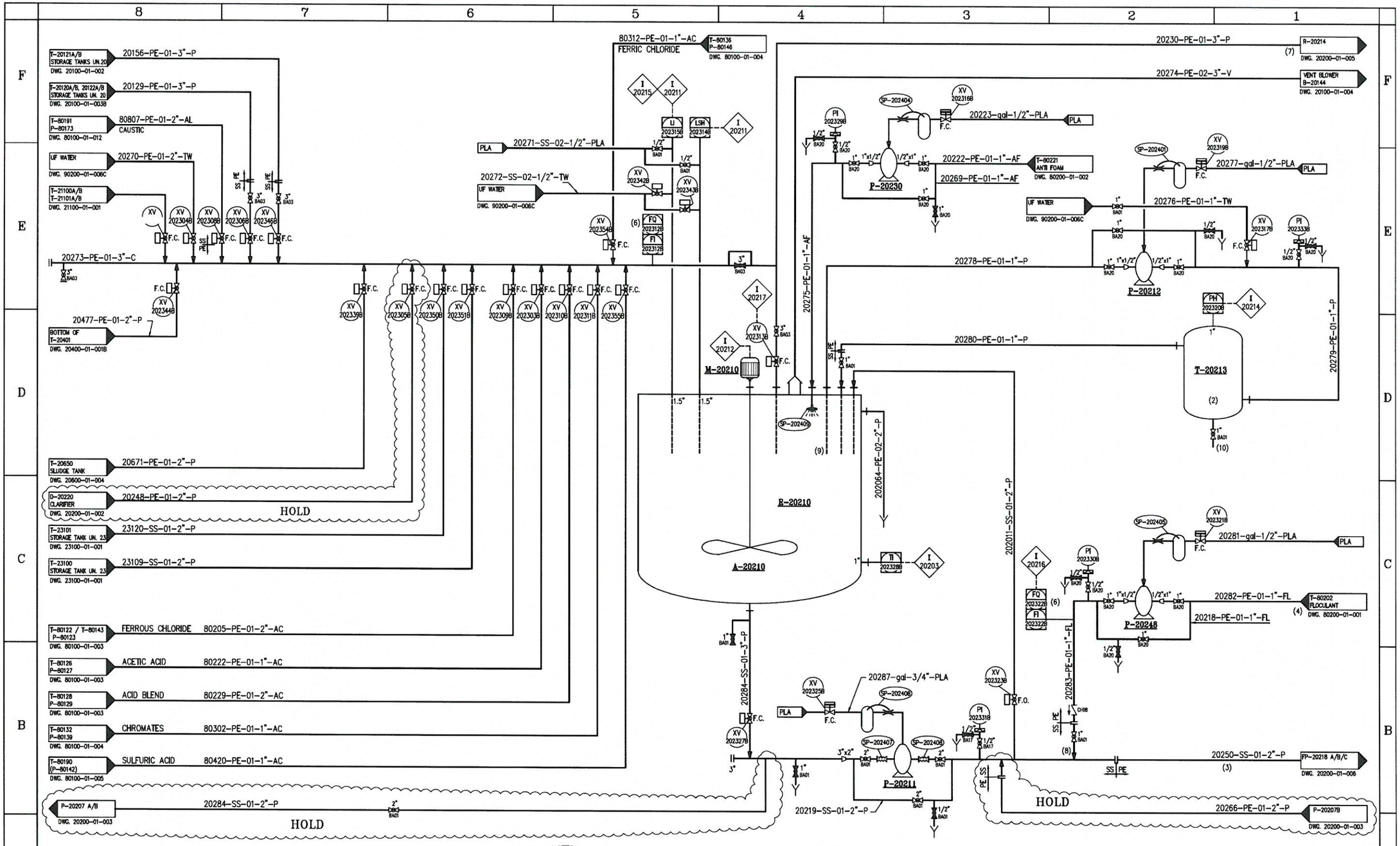


PRELIMINARY

NOTES:
1. DELETED.
2. MAINTANANCE ACCESS.
3. TURBULENT FLOW.
4. OPTION – DIRECT INLET TO REACTOR.
5. DELETED.
6. MAGNETIC FLOW INDICATOR WILL BE LOCATED. 5D DOWNSTREAM AND 10D UPSTREAM.
7. TO BE LOCATED WITH FLOW DIRECTION.
8. CONNECTION WITH INJECTOR.
9. SUCTION AT AGITATING LEVEL.
10. DRAIN TO REACTOR.

| TAG No. | A-20210 | M-20210 | P-20211 | P-20212 | P-20230 | P-20248 | R-20210 | T-20213 |
|---|---|---|---|---|---|---|---|---|
| Service | AGITATOR | MOTOR | TRANSFER PUMP | PH LOOP PUMP | ANTI FOAM PUMP | FLOCULANT PUMP | REACTOR | PH VESSEL |
| Fluid | | | SLUDGE | SLUDGE | ANTI FOAM | FLOCULANT | SLUDGE | SLUDGE |
| Size | | 10 HP | 2" air diaph. | 0.5" air diaph. | 0.5" air diaph. | 0.5" air diaph. | 50 m3 | H=0.5m, D=0.2m |
| Mat. of const. | | | SS | PP | PP | PP | SS | SS |
| Remarks | | | | | | | | |

| no. | description | date | by | ע"מ |
|---|---|---|---|---|
| P1 | INTERLOCKS UPDATE | 18.05.16 | Danuta | N.R. |
| P0 | PRELIMINARY | 15.11.15 | Danuta | N.R. |

REVISIONS

| | by: | date: |
|---|---|---|
| design.: | K.F. | 15.11.15 |
| drawn: | Danuta | 15.11.15 |
| check.: | N.R. | 15.11.15 |
| appr.: | | |

title: ELCON-USA

title: UNIT 20 BATCH REACTOR R-20210 P & I DIAGRAM

proj. no: –
dwg. no: USA-20200-01-004
comp. dwg. no: USA-20200-01-004
issue: P1

elcon

Y:\PI&D\PRELIMINARY\LAST VERSIONS (ALL UNITS)\UNIT 20\USA-20200-01-004_P1.dwg, 15/06/2016 10:26:12

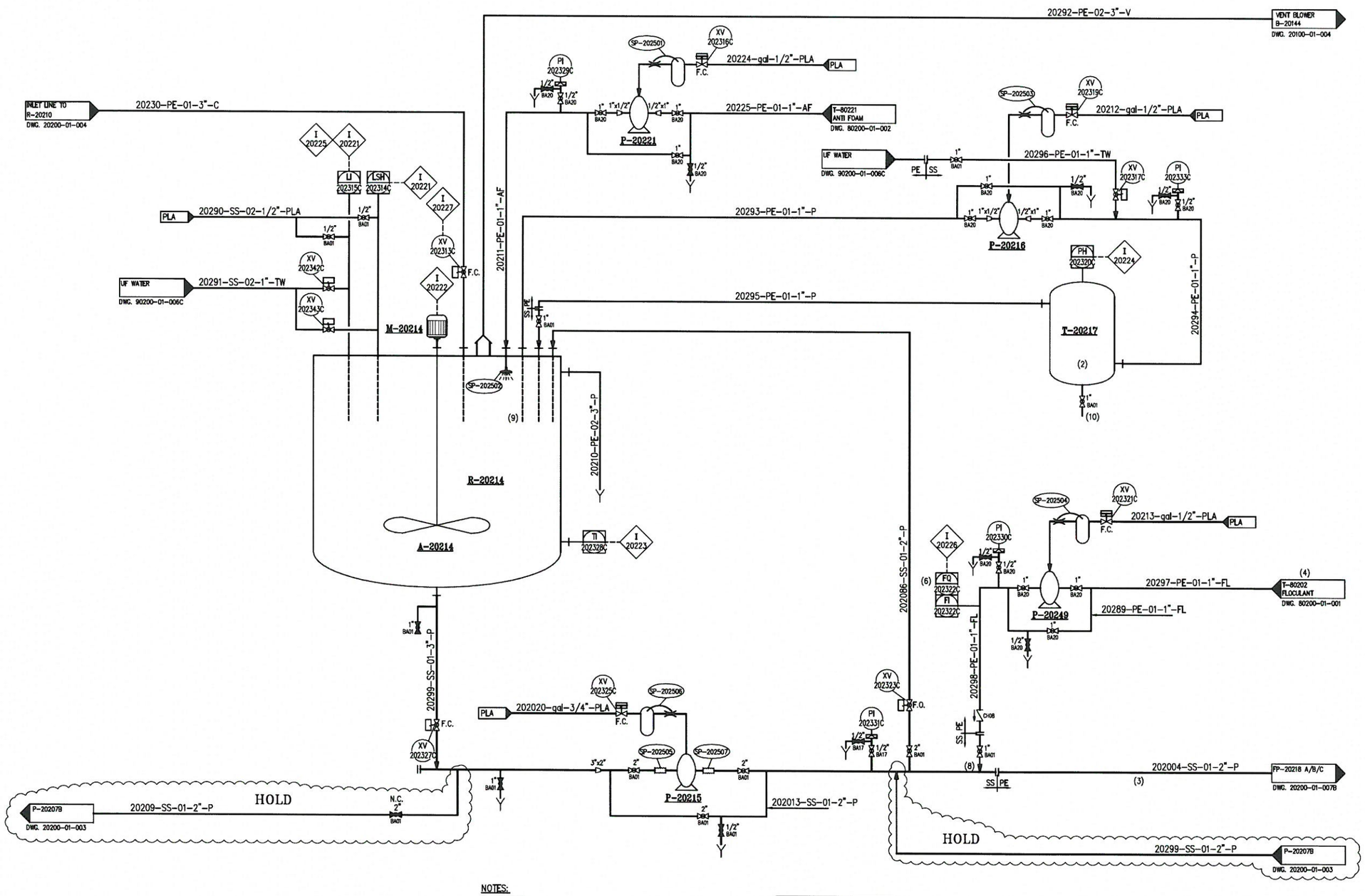


NOTES:
1. DELETED.
2. MAINTANANCE ACCESS.
3. TURBULENT FLOW.
4. OPTION – DIRECT INLET TO REACTOR.
5. DELETED.
6. MAGNETIC FLOW INDICATOR WILL BE LOCATED. 5D DOWNSTREAM AND 10D UPSTREAM.
7. TO BE LOCATED WITH FLOW DIRECTION.
8. CONNECTION WITH INJECTOR.
9. SUCTION AT AGITATING LEVEL.
10. DRAIN TO REACTOR.

PRELIMINARY

| TAG No. | A-20214 | M-20214 | P-20215 | P-20216 | P-20221 | P-20249 | R-20214 | T-20217 |
|---|---|---|---|---|---|---|---|---|
| Service | AGITATOR | MOTOR | TRANSFER PUMP | PH LOOP PUMP | ANTI FOAM PUMP | FLOCULANT PUMP | REACTOR | PH VESSEL |
| Fluid | | | SLUDGE | SLUDGE | ANTI FOAM | FLOCULANT | SLUDGE | SLUDGE |
| Size | | 10 HP | 2" air diaph. | 0.5" air diaph. | 0.5" air diaph. | 0.5" air diaph. | 20-50 m3 | H=0.5m, D=0.2m |
| Mat. of const. | | | SS | PP | PP | PP | SS | SS |
| Remarks | | | | | | | | |

| no. | description | date | by | appr. |
|---|---|---|---|---|
| P1 | INTERLOCKS UPDATE | 18.05.16 | Danuta | N.R. |
| P0 | PRELIMINARY | 15.11.15 | Danuta | N.R. |

REVISIONS

| | by: | date: |
|---|---|---|
| design.: | K.F. | 15.11.15 |
| drawn.: | Danuta | 15.11.15 |
| check.: | N.R. | 15.11.15 |
| appr.: | | |

title: ELCON-USA

title: UNIT 20 BATCH REACTOR R-20214 P & I DIAGRAM

proj. no: –
dwg. no: USA-20200-01-005
comp. dwg. no: USA-20200-01-005
issue: P1

elcon

n\:Y ng\:Y\PI&D\PRELIMINARY\LAST VERSIONS (ALL UNITS)\UNIT 20\USA-20200-01-005_P1.dwg, 15/06/2016 10:27:24

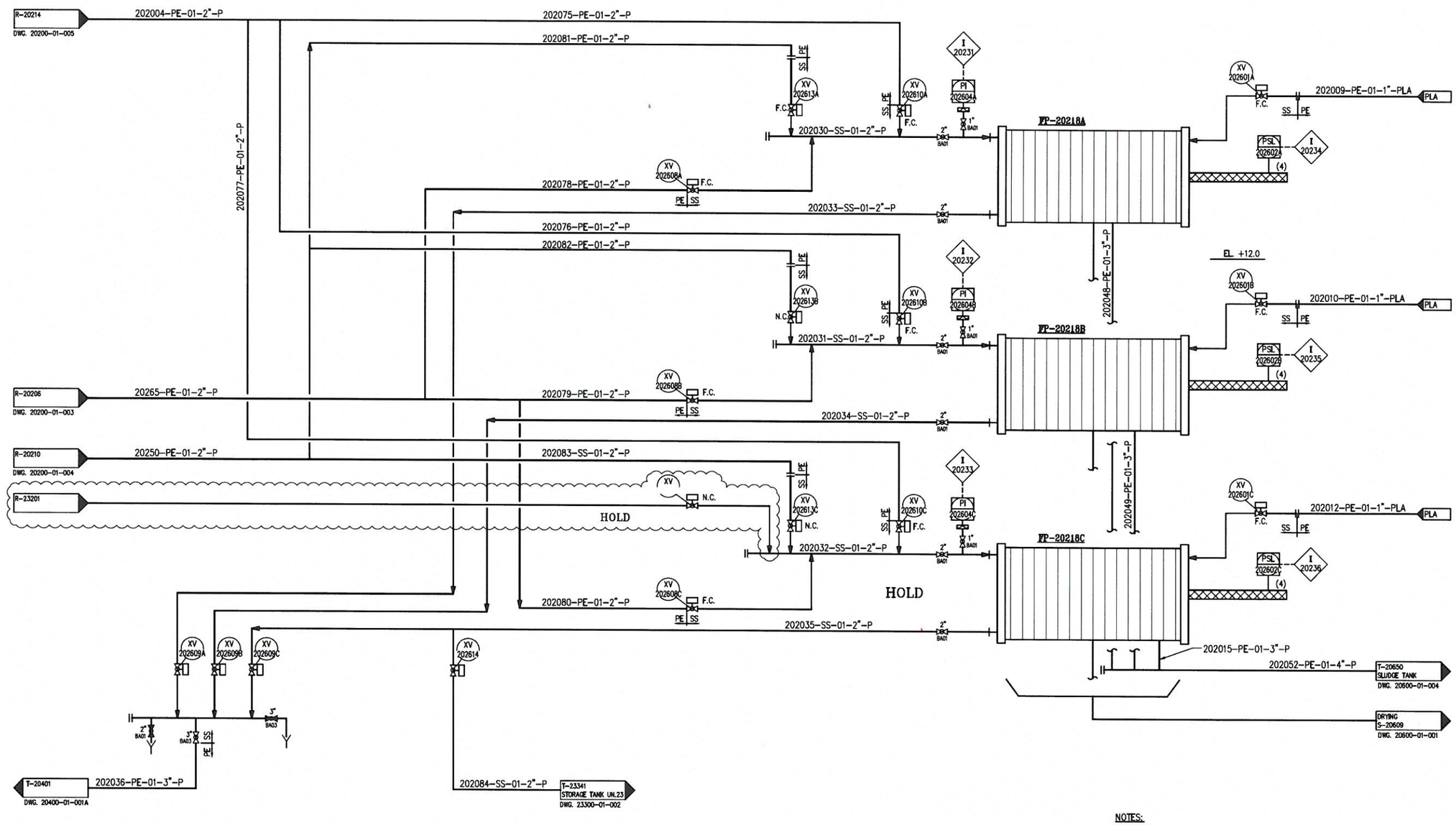


PRELIMINARY

NOTES:

1. ONE HOOPER FOR 3 F.P.
2. IF POSSIBLE USE B-20254A (WASH REACTORS VENT BLOWER)
3. CONNECT O VENT BLOWER SUCTION LINE WITH FLOW DIRECTION.
4. TO BE SUPPLIED WITH FILTER PRESS.
5. DELETED.
6. DELETED.

| TAG No. | FP-20218 A/B | FP-20218 C |
|---|---|---|
| Service | FILTER PRESS | FILTER PRESS |
| Fluid | | |
| Size | 1m²/43 PLATE/1m³ | 1m²/43 PLATE/1m³ |
| Mat. of const. | PP | PP |
| Remarks | EXIS. | |

| no. | description | date | by | app. |
|---|---|---|---|---|
| P2 | INTERLOCKS UPDATE | 18.05.16 | Danuta | N.R. |
| P1 | FOR APPROVAL | 14.04.16 | Danuta | N.R. |
| P0 | PRELIMINARY | 15.11.15 | Danuta | N.R. |

REVISIONS

| | by: | date: |
|---|---|---|
| design.: | K.F. | 15.11.15 |
| drawn: | Danuta | 15.11.15 |
| check.: | N.R. | 15.11.15 |
| appr.: | | |

title: ELCON-USA

title: UNIT 20 FILTER PRESS P & I DIAGRAM

proj. no: –
dwg. no: USA-20200-01-006
comp. dwg. no: USA-20200-01-006
issue: P2

I 20201 ON LI-202315A HIGH LEVEL OR LSH-202314A, CLOSE ALL INLET VALVES TO REACTOR R-20206:
XV-202303A, XV-202304A, XV-202305A, XV-202306A, XV-202308A, XV-202309A, XV-202310A,
XV-202311A, XV-202313A, XV-202339A, XV-202344A, XV-202346A, XV-202348A, XV-202350A,
XV-202351A, XV-202354A, XV-202355X, XV-202XXXA

I 20202 IF A-20206 STOP, CLOSE ALL INLET VALVES TO REACTOR R-20206:
XV-202303A, XV-202304A, XV-202305A, XV-202306A, XV-202308A, XV-202309A, XV-202310A,
XV-202311A, XV-202313A, XV-202339A, XV-202344A, XV-202346A, XV-202348A, XV-202350A,
XV-202351A, XV-202354A, XV-202355X, XV-202XXXA

I 20203 ON HIGH TEMP TI-202328A, CLOSE ALL INLET VALVES, ALLOW ONLY UF WATER INLET (XV-202304A)

I 20204 ON HIGH PH-202320A, CLOSE XV-202308A.
ON LOW PH-202320A, CLOSE XV-202303A, XV-202309A, XV-202310A, XV-202311A, XV-202355A

I 20205 ON LOW LEVEL (LI-202315A), STOP A-20206
ON LOW LOW LEVEL (LI-202315A), CLOSE XV-202325A AND XV-202327A

I 20206 ON LOW FI-202322A, CLOSE XV-202325A

I 20211 ON LI-202315B HIGH LEVEL OR LSH-202314B AND XV-202313B OPEN, CLOSE ALL INLET VALVES TO REACTOR R-20210:
XV-202303B, XV-202304B, XV-202305B, XV-202306B, XV-202308B, XV-202309B, XV-202310B,
XV-202311B, XV-202313B, XV-202339B, XV-202344B, XV-202346B, XV-202348B, XV-202350B,
XV-202351B, XV-202354B, XV-202355B, XV-202XXXB

I 20212 IF A-20210 STOP AND XV-202313B OPEN, CLOSE
XV-202303B, XV-202304B, XV-202305B, XV-202306B, XV-202308B, XV-202309B, XV-202310B,
XV-202311B, XV-202313B, XV-202339B, XV-202344B, XV-202346B, XV-202348B, XV-202350B,
XV-202351B, XV-202354B, XV-202355B, XV-202XXXB

I 20213 ON HIGH TEMP TI-202328B AND XV-202313B OPEN, CLOSE ALL INLET VALVES TO REACTOR
XV-202303B, XV-202304B, XV-202305B, XV-202306B, XV-202308B, XV-202309B, XV-202310B,
XV-202311B, XV-202313B, XV-202339B, XV-202344B, XV-202346B, XV-202348B, XV-202350B,
XV-202351B, XV-202354B, XV-202355B, XV-202XXXB
ALLOW ONLY UF WATER IN TO REACTOR (OPEN XV-202304B)

I 20214 ON HIGH PH-202320B AND XV-202313B OPEN, CLOSE XV-202308B AND XV-202313C
ON LOW PH-202320B AND XV-202313B OPEN, CLOSE XV-202303B, XV-202309B, XV-202310B,
XV-202311B, XV-202355B

I 20215 ON LOW LEVEL (LI-202315B), STOP A-20210
ON LOW LOW LEVEL (LI-202315B), CLOSE XV-202325B AND XV-202327B

I 20216 ON LOW FI-202322B, CLOSE XV-202325B

I 20217 ONLY ONE OF THE VALVES XV-202313B AND XV-202313C, SHALL BE OPEN SIMULTANICLY

I 20221 ON LI-202315C HIGH LEVEL OR LSH-202314C AND XV-202313C OPEN, CLOSE ALL INLET VALVES TO REACTOR R-20214
XV-202303B, XV-202304B, XV-202305B, XV-202306B, XV-202308B, XV-202309B, XV-202310B,
XV-202311B, XV-202313B, XV-202339B, XV-202344B, XV-202346B, XV-202348B, XV-202350B,
XV-202351B, XV-202354B, XV-202355B, XV-202XXXB

I 20222 IF A-20214 STOP AND XV-202313C OPEN, CLOSE
XV-202303B, XV-202304B, XV-202305B, XV-202306B, XV-202308B, XV-202309B, XV-202310B,
XV-202311B, XV-202313B, XV-202339B, XV-202344B, XV-202346B, XV-202348B, XV-202350B,
XV-202351B, XV-202354B, XV-202355B, XV-202XXXB

I 20223 ON HIGH TEMP TI-202328C AND XV-202313B OPEN,CLOSE ALL INLET VALVES TO REACTOR
XV-202303B, XV-202304B, XV-202305B, XV-202306B, XV-202308B, XV-202309B, XV-202310B,
XV-202311B, XV-202313B, XV-202339B, XV-202344B, XV-202346B, XV-202348B, XV-202350B,
XV-202351B, XV-202354B, XV-202355X, XV-202XXXB
ALLOW ONLY UF WATER IN TO REACTOR (OPEN XV-202304B)

I 20224 ON HIGH PH-202320C AND XV-202313C, CLOSE XV-202308B
ON LOW PH-202320C AND XV-202313C OPEN, CLOSE XV-202303B, XV-202309B, XV-202310B,
XV-202311B, XV-202355B

I 20225 ON LOW LEVEL (LI-202315C), STOP A-20214
ON LOW LOW LEVEL (LI-202315C), CLOSE XV-202325C AND XV-202327C

I 20226 ON LOW FI-202322C, CLOSE XV-202325C

I 20227 ONLY ONE OF THE VALVES XV-202313B AND XV-202313C, SHALL BE OPEN SIMULTANICLY

I 20231 ON PI-202604A HIGH, CLOSE XV-202608A, XV-202610A, XV-202613A

I 20232 ON PI-202604B HIGH, CLOSE XV-202608B, XV-202610B, XV-202613B

I 20233 ON PI-202604C HIGH, CLOSE XV-202608C, XV-202610C, XV-202613C

I 20234 ON PSL-202602A HIGH, CLOSE XV-202608A, XV-202610A, XV-202613A

I 20235 ON PSL-202602B HIGH, CLOSE XV-202608B, XV-202610B, XV-202613B

I 20236 ON PSL-202602C HIGH, CLOSE XV-202608C, XV-202610C, XV-202613C

PRELIMINARY

| no. | description | date | by | app. |
|---|---|---|---|---|
| P0 | PRELIMINARY | 18.05.16 | Danuta | N.R. |

REVISIONS

| | | |
|---|---|---|
| design.: | K.F. | 18.05.16 |
| drawn: | Danuta | 18.05.16 |
| check.: | N.R. | 18.05.16 |
| appr.: | | |

title: ELCON-USA

title: UNIT 20
PHYSICAL CHEMICAL TREATMENTS
INTERLOCKS LIST

proj. no: –
dwg. no: USA-20200-01-030
comp. dwg. no: USA-20200-01-030
issue: P0

,D\:Y 5D\:Y\PI&D\PRELIMINARY\LAST VERSIONS (ALL UNITS)\UNIT 20\USA-20200-01-030_P0.dwg, 21/06/2016 09:36:39

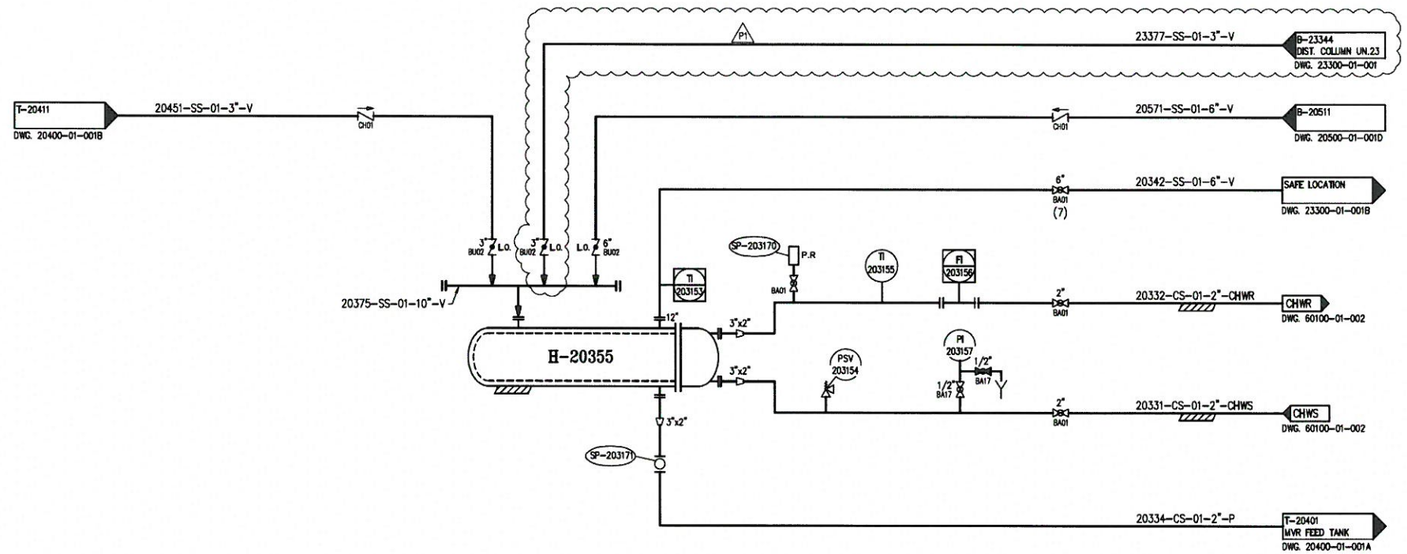


NOTES:

1. DELETED.
2. DELETED.
3. DELETED.
4. DELETED.
5. DELETED.
6. DELETED.
7. LOCK THIS VALVE IN OPEN POSITION.
8. DELETED.
9. DELETED.
10. DELETED.
11. DELETED.
12. DELETED.
13. DELETED.

PRELIMINARY

| | |
|---|---|
| TAG No. | H-20355 |
| Service | CONDENSER WITH CHILLED WATER |
| Fluid | SOLVENT |
| Size | H=70,000 kcal/h |
| Mat. of const. | SS316 |
| Remarks | |

| no. | description | date | by | app. |
|---|---|---|---|---|
| P1 | FOR APPROVAL | 14.04.16 | Danuta | N.R. |
| P0 | PRELIMINARY | 15.11.15 | Danuta | N.R. |

REVISIONS

| | by: | date: |
|---|---|---|
| design.: | K.F. | 15.11.15 |
| drawn: | Danuta | 15.11.15 |
| check.: | N.R. | 15.11.15 |
| appr.: | | |

title: ELCON-USA

title: UNIT 20 VENT COOLER P & I DIAGRAM

elcon recycling center

proj. no: –

dwg. no: USA-20300-01-001

comp. dwg. no: USA-20300-01-001

issue: P1

n:\:Y מס\:Y\PI&D\PRELIMINARY\UNIT 20\P1\USA-20300-01-001_P1.dwg, 24/04/2016 08:59:23

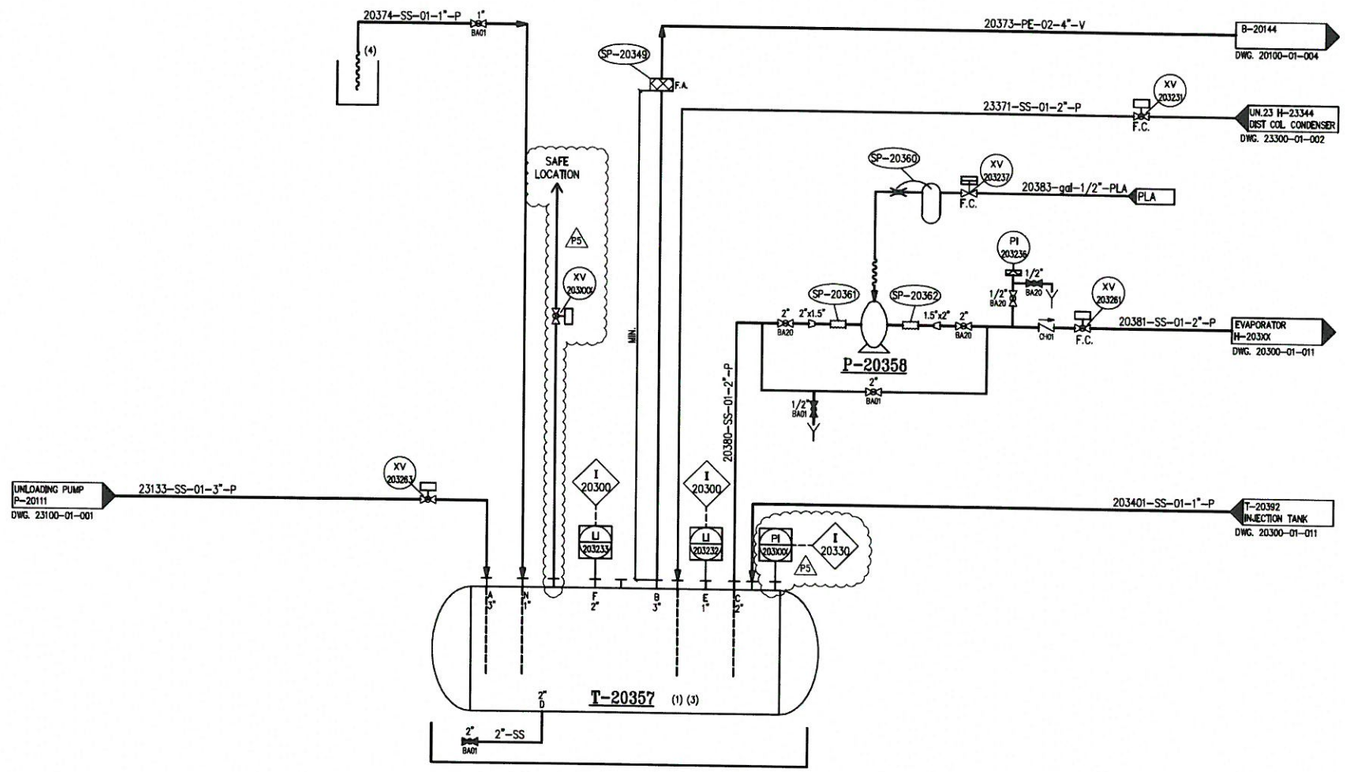


NOTES:

1. LOCATED IN FLAMMABLE SPILL CONTAINMENT.
2. FILLING CUBES WITH EXCESS DISTILLATE.
3. DESIGN VESSEL FOR 3 barg/FV.
4. FILLING THE TANK FROM CUBES.
5. DELETED.
6. DELETED.
7. LOCK THIS VALVE IN OPEN POSITION.
8. DELETED.
9. DELETED.
10. DELETED.
11. DELETED.
12. DELETED.
13. DELETED.
14. DELETED.

PRELIMINARY

| TAG No. | T-20357 | P-20358 |
|---|---|---|
| Service | RICH DISTILLATE TANK | INJECTION PUMP TO THERMAL OXIDIZER |
| Fluid | | RICH DISTILLATE |
| Size | 50 $m^3$ | 1.5" AIR DIAPH. |
| Mat. of const. | SS316/CS | SS316/TFE |
| Remarks | | |

| no. | description | date | by | ap. |
|---|---|---|---|---|
| P5 | PSV CHANGE | 15.02.17 | Danuta | N.R. |
| P4 | PSV ADDITION AND VENT DIAMETER REVISED | 23.08.16 | Danuta | N.R. |
| P3 | ARROW REVISED | 06.07.16 | Danuta | N.R. |
| P2 | INTERLOCKS UPDATE | 18.05.16 | Danuta | N.R. |
| P1 | FOR APPROVAL | 14.04.16 | Danuta | N.R. |
| P0 | PRELIMINARY | 15.11.15 | Danuta | N.R. |

REVISIONS

| | by: | date: |
|---|---|---|
| design.: | K.F. | 15.11.15 |
| drawn: | Danuta | 15.11.15 |
| check.: | N.R. | 15.11.15 |
| appr.: | | |

title: ELCON-USA

title: UNIT 20 ORGANIC STORAGE P & I DIAGRAM

proj. no: –

dwg. no: USA-20300-01-002

comp. dwg. no: USA-20300-01-002

issue: P5

:\D\:Y DG\:Y\PI&D\PRELIMINARY\LAST VERSIONS (ALL UNITS)\UNIT 20\USA-20300-01-002_P5.dwg, 16/02/2017 12:39:25

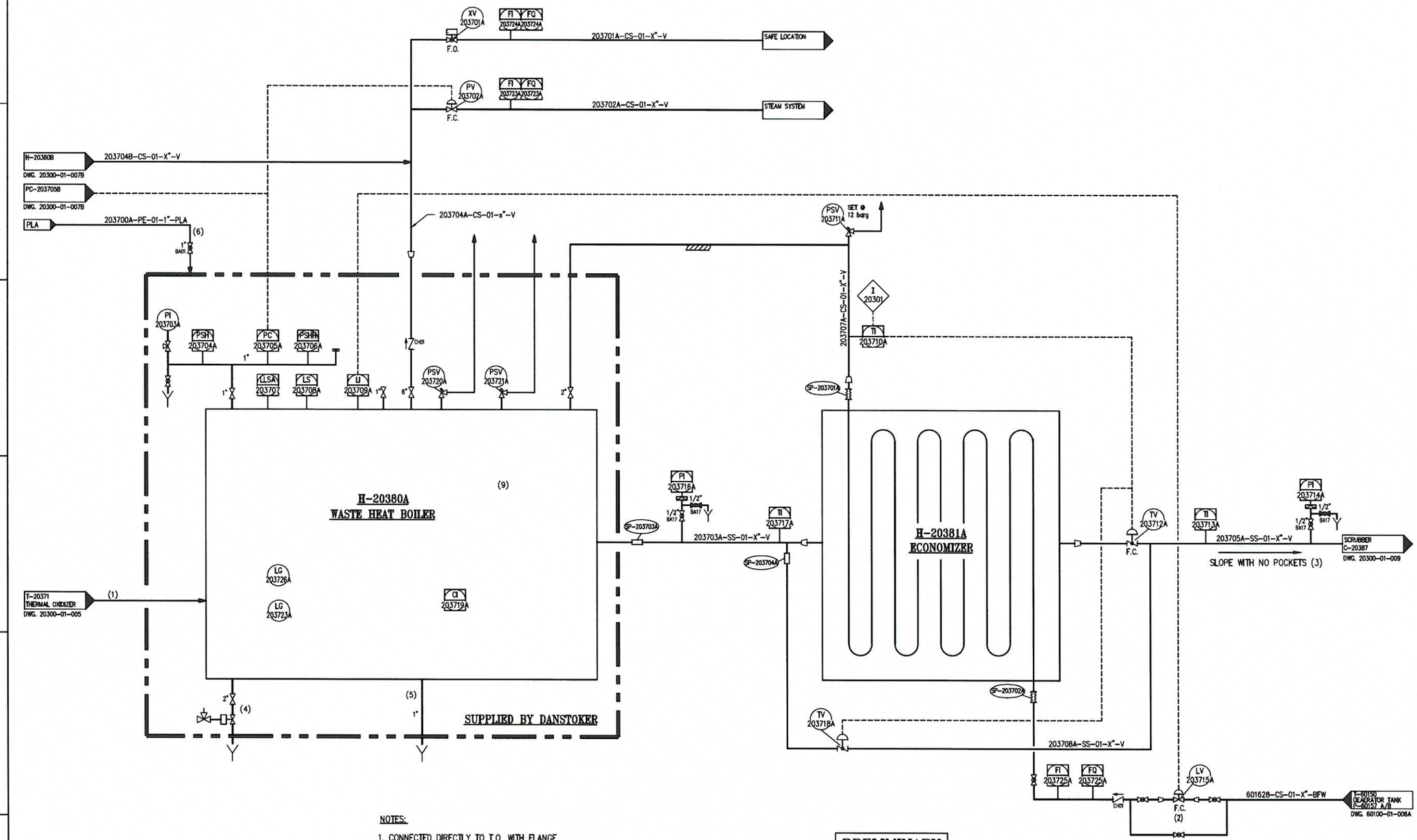


PRELIMINARY

NOTES:

1. CONNECTED DIRECTLY TO T.O. WITH FLANGE.
2. VALVE SUPPLIED BY DANSTOKER AND CONTROLED BY LOCAL CONTROL PANEL
3. IN CASE OF POCKETS, DRAIN NEEDS TO BE DESIGN.
4. AUTOMATIC BLOWDOWN ACC. TO TIMER.
5. BLOW DOWN ACC. TO CI.
6. PLA TO SANBLAST SYSTEM.
7. STEAM TRAP ON LINE TO BE DESIGN ACC. TO STANDARD.
8. FLANGE TO FLANGE CONNECTION.
9. INTERLOCKS ACC. TO VENDOR, ON INTERLOCK SEND MESSAGE TO T.O. "WHB NOT O.K."

| TAG No. | H-20380A | H-20381A |
|---|---|---|
| Service | WASTE HEAT BOILER | ECONOMIZER |
| Fluid | AIR/WATER/STEAM | AIR/BFW |
| Size | 12 ton/h<br>8 barg steam | 1.6x10⁶ kcal/h |
| Mat. of const. | BY DANSTOKER | SHELL-CS TUBES-SS |
| Remarks | | |

| no. | description | date | by | app. |
|---|---|---|---|---|
| P1 | INTERLOCKS UPDATE | 18.05.16 | Danuta | N.R. |
| P0 | PRELIMINARY | 15.11.15 | Danuta | N.R. |

REVISIONS

| | by: | date: |
|---|---|---|
| design.: | K.F. | 15.11.15 |
| drawn: | Danuta | 15.11.15 |
| check.: | N.R. | 15.11.15 |
| appr.: | | |

title: ELCON-USA

title: UNIT 20
WASTE HEAT RECOVERY
P & I DIAGRAM

elcon recycling centre

proj. no: –
dwg. no: USA-20300-01-007A
comp. dwg. no: USA-20300-01-007A
issue: P1

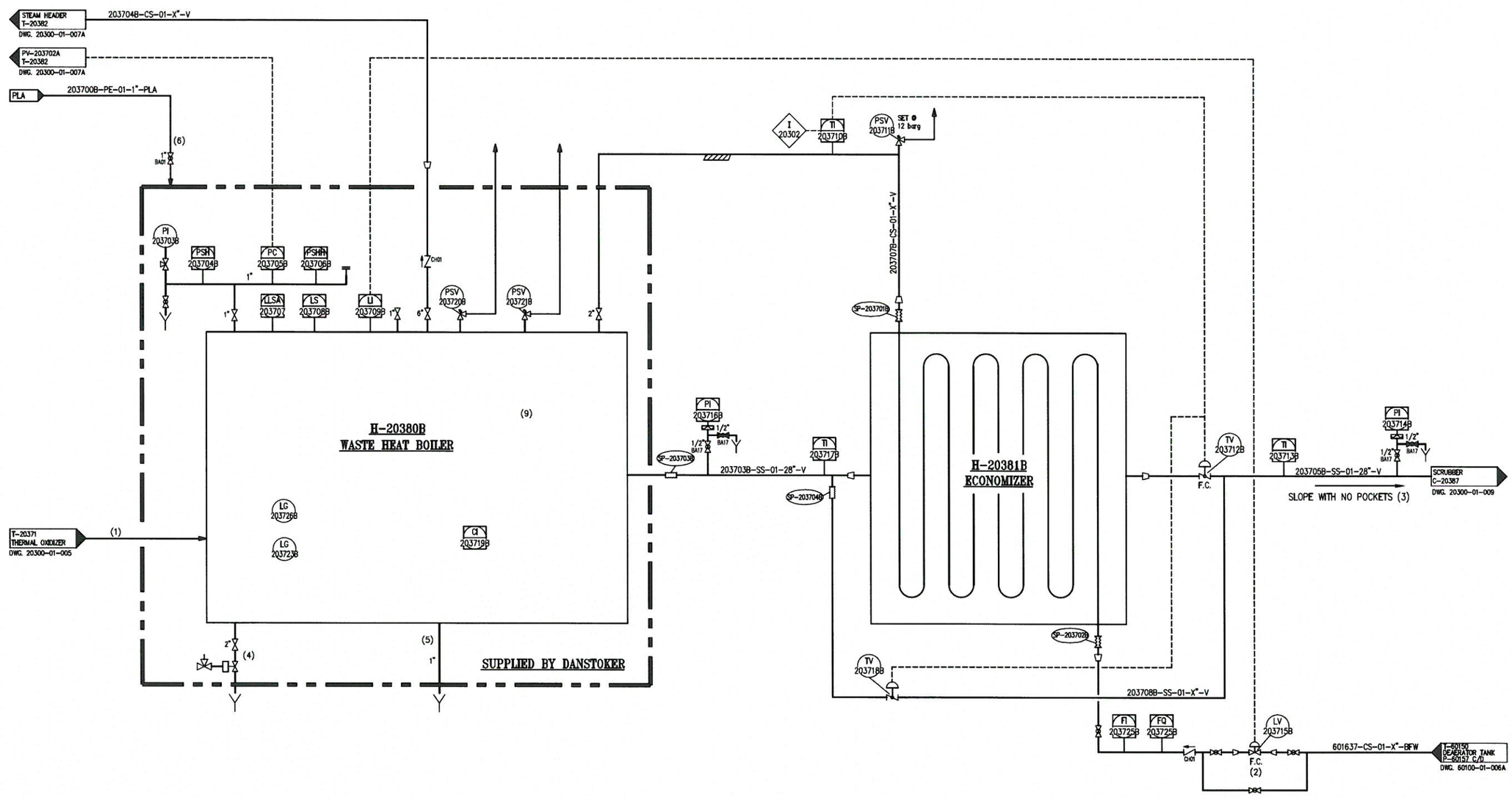


NOTES:

1. CONNECTED DIRECTLY TO T.O. WITH FLANGE.
2. VALVE SUPPLIED BY DANSTOKER AND CONTROLED BY LOCAL CONTROL PANEL.
3. IN CASE OF POCKETS, DRAIN NEEDS TO BE DESIGN.
4. AUTOMATIC BLOWDOWN ACC. TO TIMER.
5. BLOW DOWN ACC. TO CI.
6. PLA TO SANBLAST SYSTEM.
7. STEAM TRAP ON LINE TO BE DESIGN ACC. TO STANDARD.
8. FLANGE TO FLANGE CONNECTION.
9. INTERLOCKS ACC. TO VENDOR, ON INTERLOCK SEND MESSAGE TO T.O. "WHB NOT O.K."

PRELIMINARY

| TAG No. | H-20380B | H-20381B |
|---|---|---|
| Service | WASTE HEAT BOILER | ECONOMIZER |
| Fluid | AIR/WATER/STEAM | AIR/BFW |
| Size | 12 ton/h<br>8 barg steam | 1.6x10⁶ kcal/h |
| Mat. of const. | BY DANSTOKER | SHELL-CS TUBES-SS |
| Remarks | | |

| no. | description | date | by | app. |
|---|---|---|---|---|
| P1 | INTERLOCKS UPDATE | 18.05.16 | Danuta | N.R. |
| P0 | PRELIMINARY | 15.11.15 | Danuta | N.R. |

REVISIONS

| | by: | date: |
|---|---|---|
| design.: | K.F. | 15.11.15 |
| drawn: | Danuta | 15.11.15 |
| check.: | N.R. | 15.11.15 |
| appr.: | | |

title: ELCON-USA

title: UNIT 20
WASTE HEAT RECOVERY
P & I DIAGRAM

elcon

proj. no: –
dwg. no: USA-20300-01-007B
issue: P1
comp. dwg. no: USA-20300-01-007B

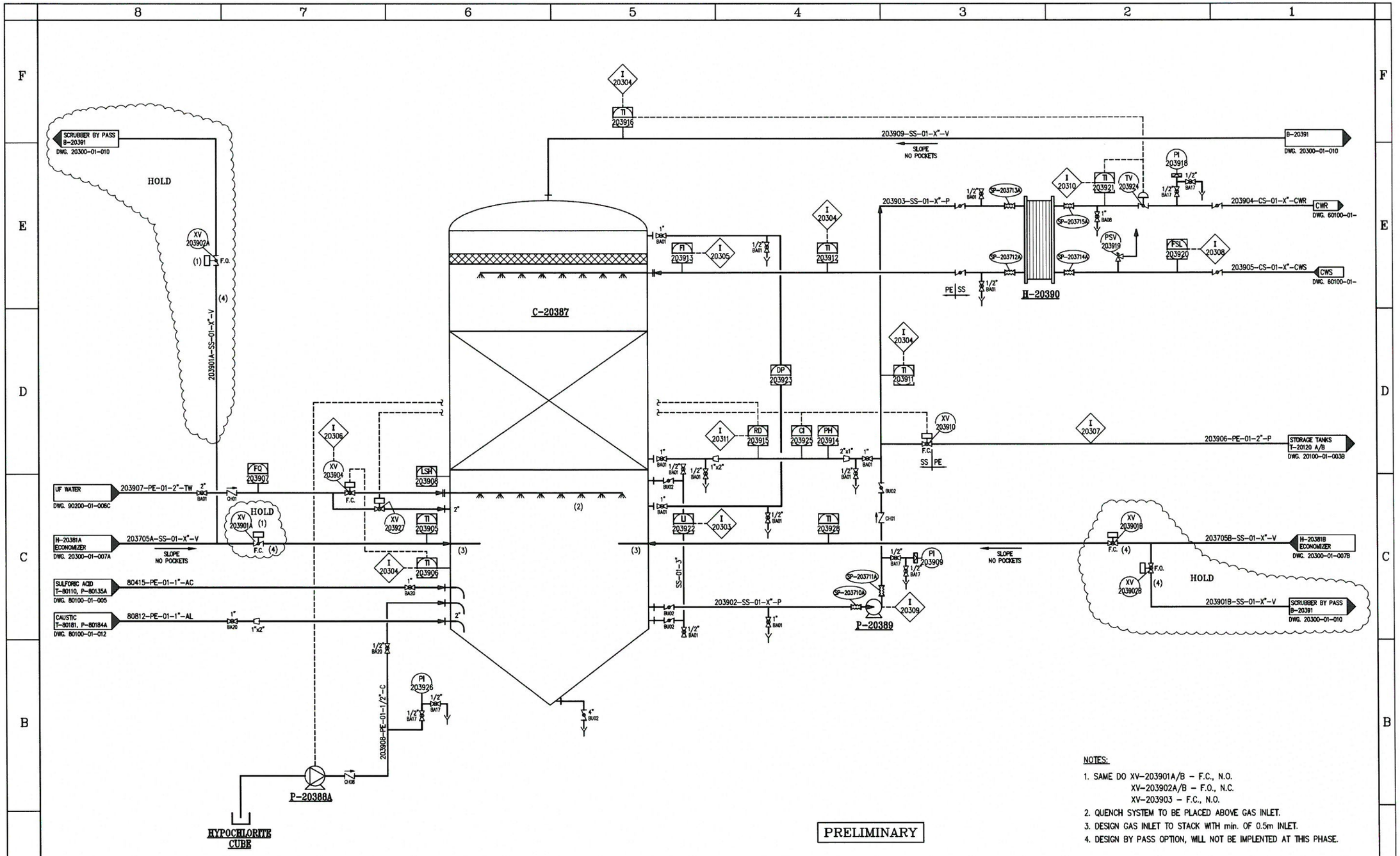


NOTES:

1. SAME DO XV-203901A/B – F.C., N.O.
   XV-203902A/B – F.O., N.C.
   XV-203903 – F.C., N.O.
2. QUENCH SYSTEM TO BE PLACED ABOVE GAS INLET.
3. DESIGN GAS INLET TO STACK WITH min. OF 0.5m INLET.
4. DESIGN BY PASS OPTION, WILL NOT BE IMPLENTED AT THIS PHASE.

| TAG No. | C-20387 | P-20388A | P-20389 | H-20390 |
|---|---|---|---|---|
| Service | SCRUBBER | TRANSFER PUMP | CIRCULATION PUMP | COOLER |
| Fluid | | HYPOCLORITE | WATER | WATER |
| Size | I.D.-1.9m H=9m PACKING-3m | 0-10 l/h, 2 bar | 90 m3/h, 25mLc | 1.3x10⁶ kcal/h |
| Mat. of const. | DEVAKEN 470 | PP/PVDF | SS | SONDEX S-22 |
| Remarks | | | 37 kW | |

| no. | description | date | by | ap. |
|---|---|---|---|---|
| P1 | INTERLOCKS UPDATE | 18.05.16 | Danuta | N.R. |
| P0 | PRELIMINARY | 15.11.15 | Danuta | N.R. |

REVISIONS

| | by: | date: |
|---|---|---|
| design.: | K.F. | 15.11.15 |
| drawn: | Danuta | 15.11.15 |
| check.: | N.R. | 15.11.15 |
| appr.: | | |

title: ELCON-USA

title: UNIT 20 SCRUBBER SYSTEM P & I DIAGRAM

elcon recycling center

| proj. no | dwg. no | issue |
|---|---|---|
| – | USA-20300-01-009 | P1 |
| comp. dwg. no: USA-20300-01-009 | | |

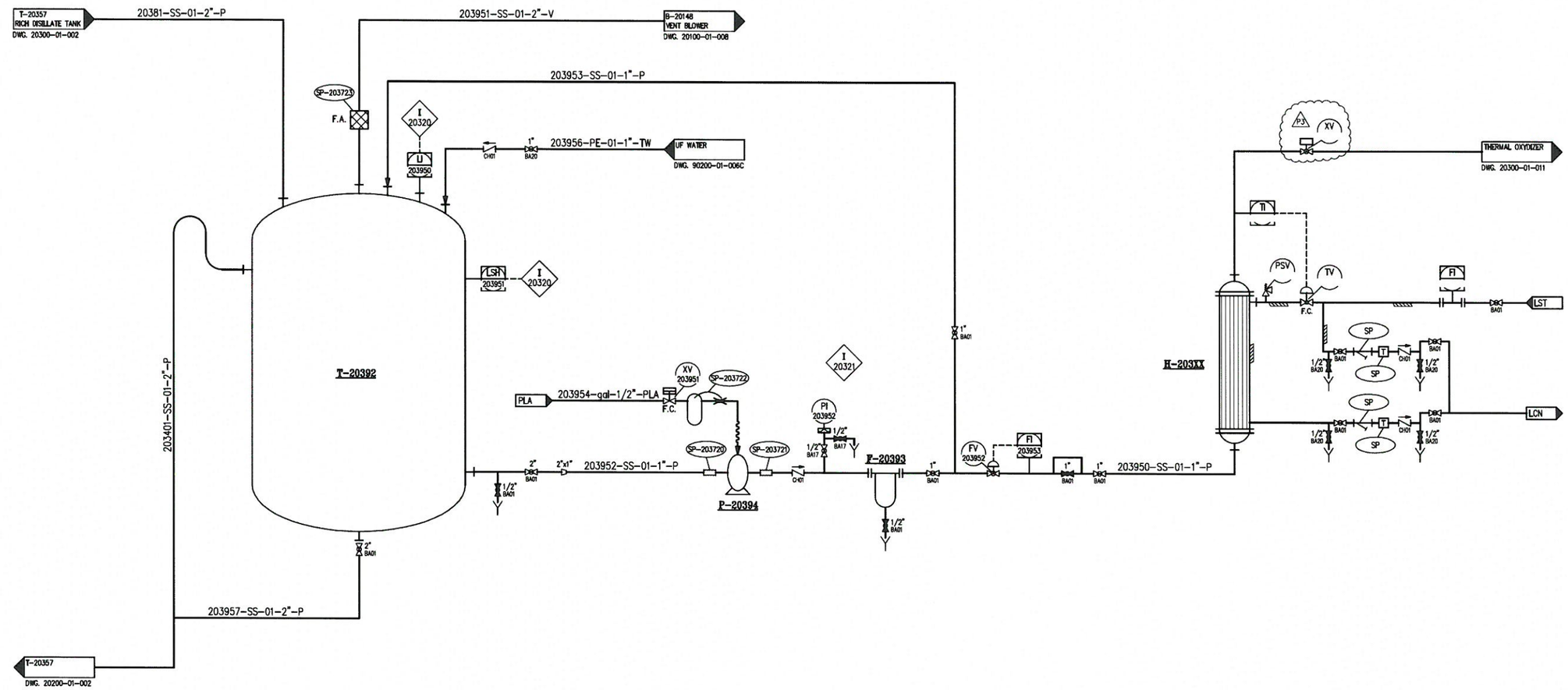


PRELIMINARY

| TAG No. | T-20392 | F-20393 | P-20394 | H-203XX |
|---|---|---|---|---|
| Service | INJECTION TANK | PUMP FILTER | INJECTION PUMP | EVAPORATOR |
| Fluid | WASTE LIQUID SOLVENT | WASTE LIQUID SOLVENT | WASTE LIQUID SOLVENT | ORGANIC FLUID |
| Size | 2 m3 | CARTRIDGE 25μ | AIR DIAPH. 1/2" | 500,000 kcal/h |
| Mat. of const. | SS | SS | | SS316 |
| Remarks | | | EX. PROOF SS/CERAMIC & GRAPHITE | |

| no. | description | date | by | app. |
|---|---|---|---|---|
| P3 | UPDATED AS NOTED | 15.02.17 | Danuta | N.R. |
| P2 | DWG. NAME REVISE | 18.05.16 | Danuta | N.R. |
| P1 | INTERLOCKS UPDATE | 18.05.16 | Danuta | N.R. |
| P0 | PRELIMINARY | 15.11.15 | Danuta | N.R. |

REVISIONS

| | by | date |
|---|---|---|
| design.: | K.F. | 15.11.15 |
| drawn: | Danuta | 15.11.15 |
| check.: | N.R. | 15.11.15 |
| appr.: | | |

title: ELCON-USA

title: UNIT 20
WASTE LIQUID INJECTION TANK AND EVAPORATOR
P & I DIAGRAM

proj. no: –
dwg. no: USA-20300-01-011
comp. dwg. no: USA-20300-01-011
issue: P3

:\D\:Y SD\:Y\PI&D\PRELIMINARY\LAST VERSIONS (ALL UNITS)\UNIT 20\USA-20300-01-011 P3.dwg, 16/02/2017 11:35:53

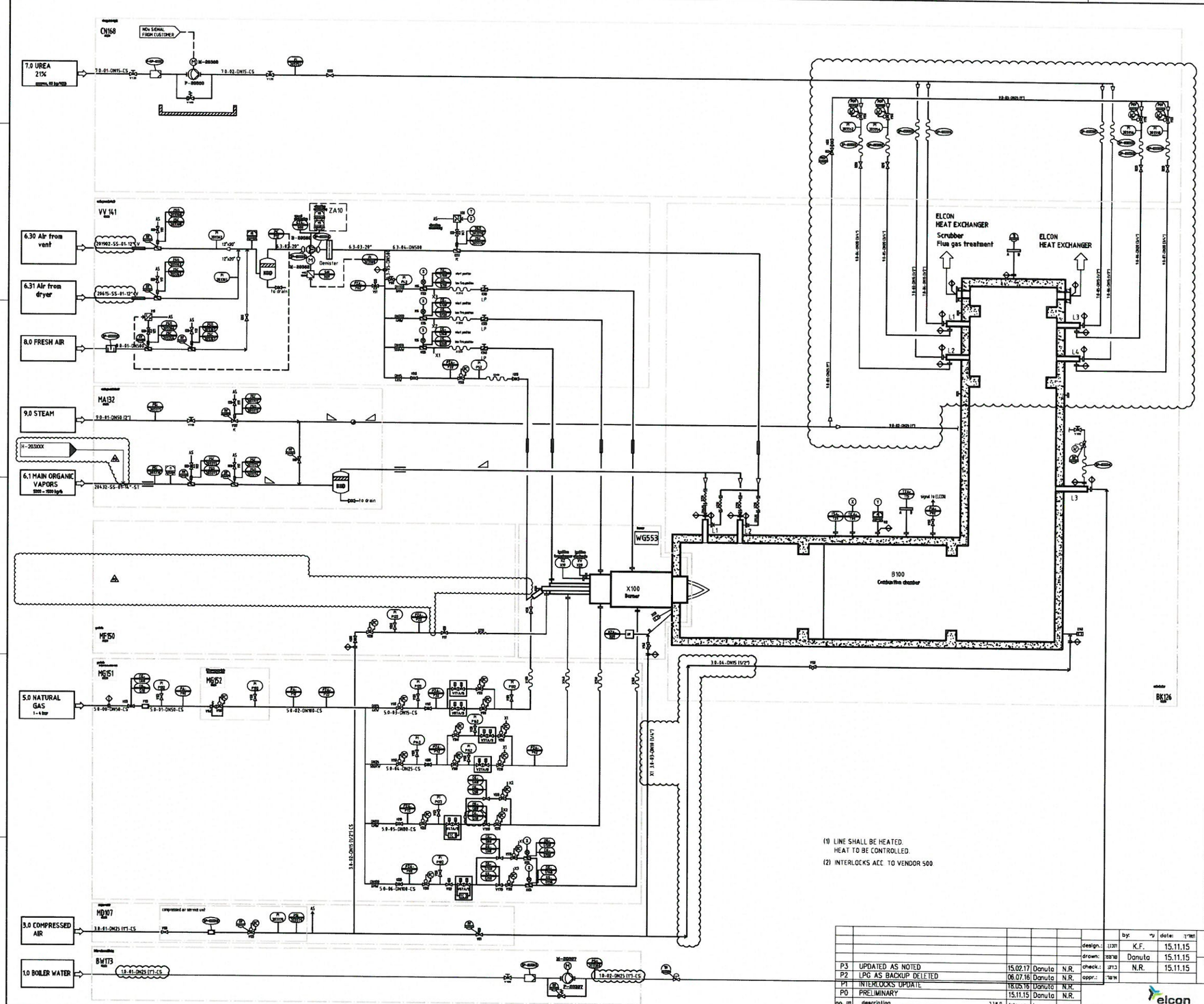


AS: air supply
KOD: Knock out drum
LP: Locked in position

| | | | |
|---|---|---|---|
| P3 | UPDATED AS NOTED | 15.02.17 | Danuta | N.R. |
| P2 | LPG AS BACKUP DELETED | 06.07.16 | Danuta | N.R. |
| P1 | INTERLOCKS UPDATE | 18.05.16 | Danuta | N.R. |
| P0 | PRELIMINARY | 15.11.15 | Danuta | N.R. |

REVISIONS

| | by: | date: |
|---|---|---|
| design.: | K.F. | 15.11.15 |
| drawn.: | Danuta | 15.11.15 |
| check.: | N.R. | 15.11.15 |
| appr.: | | |

elcon

DATE 2015-08-11

DURR — Copyright reserved

RELEASED

P&ID
VAR - COMBUSTION CHAMBER
ELCON - ISRAEL

DOCUMENT NO 500285337

DESIGNATION 05 DOC. PART 001
REVISION C SHEET/TOTAL 1/1

Title: ELCON-USA

Title: UNIT 20
THERMAL OXYDIZER
P & I DIAGRAM

proj. no
dwg. no: USA-20300-01-012
comp. dwg. no: USA-20300-01-012
Issue: P3

Z:\D\:Y\PI&D\PRELIMINARY\LAST VERSIONS (ALL UNITS)\UNIT 20\USA-20300-01-012_P3.dwg, 16/02/2017 12:01:30

I 20300 ON HIGH LEVEL LI-203232 OR LI-203233, CLOSE XV-203231 AND XV-203263

I 20301 ON HIGH TI-203710A, CLOSE TV-203712A AND OPEN TV-203718A

I 20302 ON HIGH TI-203710B, CLOSE TV-203712B AND OPEN TV-203718B

I 20303 ON HIGH LI-203922 OR LSH-203908, CLOSE XV-203927
AND SEND "SCRUBBER NOT O.K." MESSAGE TO T.O.

I 20304 ON HIGH TI-203906 OR TI-203911 OR TI-203912 OR TI-203916,
SEND MESSAGE TO T.O. "SCRUBBER NOT O.K."

I 20305 ON LOW FLOW FI-203913,
SEND MESSAGE TO T.O. "SCRUBBER NOT O.K."

I 20306 WHEN XV-203904 IS CLOSE, SEND MESSAGE TO T.O. "SCRUBBER NOT O.K."

I 20307 WHEN TARGET TANK IS FULL, SEND MESSAGE TO T.O. "SCRUBBER NOT O.K."

I 20308 ON FSL-203920, SEND MESSAGE TO T.O. "SCRUBBER NOT O.K."

I 20309 WHEN P-20389 OFF, SEND MESSAGE TO T.O. "SCRUBBER NOT O.K."

I 20310 ON TI-203921 HIGH, SEND MESSAGE TO T.O. "SCRUBBER NOT O.K."

I 20311 ON RD-203915 HIGH, SEND MESSAGE TO T.O. "SCRUBBER NOT O.K."

I 20320 ON LI-203950 OR LSH-203951, CLOSE XV-203327

I 20321 WHEN T.O. IS NOT ON TEMP, CLOSE FV-203952

P1 I 20330 WHEN PI-203XXX HIGH, OPEN XV-203XXX

PRELIMINARY

| no. | description | date | by | ap. |
|---|---|---|---|---|
| P1 | UPDATED FOR I-20330 | 15.02.17 | Danuta | N.R. |
| P0 | PRELIMINARY | 18.05.16 | Danuta | N.R. |

REVISIONS

| | by: | date: |
|---|---|---|
| design.: | K.F. | 18.05.16 |
| drawn: | Danuta | 18.05.16 |
| check.: | N.R. | 18.05.16 |
| appr.: | | |

title: ELCON-USA

title: UNIT 20
AREA 300
INTERLOCKS LIST

elcon

proj. no: –
dwg. no: USA-20300-01-030
comp. dwg. no: USA-20300-01-030
issue: P1

:\D\:Y D\:Y\PI&D\PRELIMINARY\LAST VERSIONS (ALL UNITS)\UNIT 20\USA-20300-01-030_P1.dwg, 16/02/2017 13:39:10

CONFIDENTIAL BUSINESS INFORMATION

R-20210/20214
BATCH REACTOR UN. 20
DWG. 20200-01-004

R-20206
BATCH REACTOR UN. 20
DWG. 20200-01-003

FP-20218 A/B/C
DWG. 20200-01-006

T-12264
OVERFLOW TANK UN. 12
DWG. 12200-01-006

T-20528
CRYST. COND. TANK
DWG. 20500-01-001C

H-20355
VENT COOLER
DWG. 20300-01-001C

FED
DISPOSAL PUMP P-20425
DWG. 20400-01-001B

P-20162
DRAIN PUMP
DWG. 20100-01-011(3)

P-20165
DRAIN PUMP
DWG. 20100-01-011(4)

P-20166
DRAIN PUMP
DWG. 20100-01-011(4)

VENT BLOWER
B-20144
DWG. 20100-01-004

FI-204118
DWG. 20400-01-001B

LIC- 204127
DWG. 20400-01-001B

T-20411
FLASH CHAMBER UN. 20
DWG. 20400-01-001B

| TAG No. | T-20401 | F-20404 | P-20405 |
|---|---|---|---|
| Service | FED FEED TANK | PUMP FILTER | FED FEED PUMP |
| Fluid | TREATED WASTE WATER | TREATED WASTE WATER | TREATED WASTE WATER |
| Size | 100 m3 | 3" COARSE | |
| Mat. of const. | CS | | SS |
| Remarks | | | |

| no. | description | date | by | app. |
|---|---|---|---|---|
| P1 | INTERLOCKS UPDATE | 18.05.16 | Danuta | N.R. |
| P0 | PRELIMINARY | 15.11.15 | Danuta | N.R. |

REVISIONS

| | by | date |
|---|---|---|
| design. | K.F. | 15.11.15 |
| drawn. | Danuta | 15.11.15 |
| check. | N.R. | 15.11.15 |
| appr. | | |

elcon recycling center

title: ELCON-USA

title: UNIT 20
FED FEED TANK
P & I DIAGRAM

proj. no: –
dwg. no: USA-20400-01-001A
comp. dwg. no: USA-20400-01-001A
issue: P1

Y:\PI&D\PRELIMINARY\LAST VERSIONS (ALL UNITS)\UNIT 20\USA-20400-01-001A P1.dwg, 16/06/2016 14:44:53

CONFIDENTIAL BUSINESS INFORMATION

T.O.

H-20355
DWG. 20300-01-001C

DISTILLATE
DWG. 20400-01-001C

LV-204105
DWG. 20400-01-001A

PLA

T-80221
ANTI FOAM
DWG. 80200-01-002

H-20410 C/D
DWG. 20400-01-001D

SULFURIC ACID
T-80130/P-80144
DWG. 80100-01-004

NaOH
P-80174
DWG. 80100-01-012

CWS

CWR

FI-204106
DWG. 20400-01-001A

TO CRYSTALLIZER UN.20
T-20501/T-20402
DWG. 20500-01-001

T-20401
FED FEED TANK
DWG. 20400-01-001A

T-20122 A/B
STORAGE TANKS UN.20
DWG. 20100-01-003A

HOLD
FROM (H-20410A
H-20410 C/D
DWG. 20400-01-001D

FROM T-20401
DWG. 20400-01-001A

SULFURIC ACID
T-80130/P-80144
DWG. 80100-01-005

NaOH T-80191
P-80174
DWG. 80100-01-012

UF WATER
DWG. 90200-01-006C

H-20410 C/D
DRAIN OF FED EVAPORATORS
DWG. 20400-01-001D

NOTES:

1. IN CASE OF POCKETS, DRAIN NEED TO BE DESIGNED.
2. PH MEASURMENT SHALL BE DESIGNED FOR 130°C.
3. DELETED.
4. LOCATE WITH SPRAY NOZ. MAX. 40 cm ABOVE LIQUID LEVEL.
5. DESIGN WITH DIP PIPE.
6. DESIGN WITH DIP PIPE INSIDE THE SS PIPE WITH FLOW DIRECTION. DIP PIPE SHALL BE MADE OF PVDF OR PE.
7. WILL NOT BE DESIGNED AT THIS STAGE.
8. MANHOLES FOR CLEANING TO BE DESIGNED.
9. THIS TANK IS DESIGNED FOR EMPTYING BRINE HOTTER THAN 80°C.
10. ONLY NOZZLES WILL BE DESIGNED.
11. SAME DO FOR BOTH VALVES.
12. OPTION TO WORK ACCORDING TO DENSITY.
13. STEAM TRACING.
14. LINE DIAMETER AND PUMP SIZE NEED TO BE DETERMINED ACC. TO USA DESIGN AND MASS BALANCE.

| TAG No. | B-20406 | T-20411 | P-20412 | P-20413 | P-20425 |
|---|---|---|---|---|---|
| Service | BLOWER | FLASH CHAMBER | FED CIRCULATION PUMP | ANTI FOAM PUMP | FED DISPOSAL PUMP |
| Fluid | VAPOUR | BRINE 20% | BRINE 25% | ANTI FOAM | BRINE 20% |
| Size | | 10 m³ | | 1/2" AIR DIAPH. | |
| Mat. of const. | SS | SS | Ti | PP | SS |
| Remarks | EX. PROOF MOTOR | | EXIST. | | |

PRELIMINARY

| no. | description | date | by | app. |
|---|---|---|---|---|
| P1 | INTERLOCKS UPDATE | 18.05.16 | Danuta | N.R. |
| P0 | PRELIMINARY | 15.11.15 | Danuta | N.R. |

REVISIONS

| | by: | date: |
|---|---|---|
| design.: | K.F. | 15.11.15 |
| drawn: | Danuta | 15.11.15 |
| check.: | N.R. | 15.11.15 |
| appr.: | | |

title: ELCON-USA

title: UNIT 20 FED P & I DIAGRAM

elcon engineering contractors

proj. no: –

dwg. no: USA-20400-01-001B

comp. dwg. no: USA-20400-01-001B

issue: P1

CONFIDENTIAL BUSINESS INFORMATION

T-20411
FLASH CHAMBER
DWG. 20400-01-001B

LST
DWG. 60100-01-007B

P-20425
FED DISPOSAL PUMP
DWG. 20400-01-001D

P-20412
FED CIRCULATION PUMP
DWG. 20400-01-001B

PRELIMINARY

| | |
|---|---|
| TAG No. | H-20410 C/D |
| Service | EVAPORATOR |
| Fluid | BRINE 20% |
| Size | $Q=9x10^6$ kcal/h |
| Mat. of const. | SS |
| Remarks | SHELL & TUBE |

| no. | description | date | by | app. |
|---|---|---|---|---|
| P1 | INTERLOCKS UPDATE | 18.05.16 | Danuta | N.R. |
| P0 | PRELIMINARY | 15.11.15 | Danuta | N.R. |

REVISIONS

| | by | date |
|---|---|---|
| design.: | K.F. | 15.11.15 |
| drawn: | Danuta | 15.11.15 |
| check.: | N.R. | 15.11.15 |
| appr.: | | |

title: ELCON-USA

title: UNIT 20
FED EVAPORATORS
P & I DIAGRAM

elcon recycling center

proj. no: –

dwg. no: USA-20400-01-001D

comp. dwg. no: USA-20400-01-001D

issue: P1

J:\Y 9J\:Y\PI&D\PRELIMINARY\LAST VERSIONS (ALL UNITS)\UNIT 20\USA-20400-01-001D_P1.dwg, 16/06/2016 14:47:41

I 20401 ON LI-204104 HIGH OR LSH-204102, CLOSE ALL INLETS TO T-20401
(INLETS FROM AREA 200 AND DRAIN PUMPS)

I 20402 ON LOW LI-204104, STOP P-20405

I 20410 ON LI-204127 OR LSH-204126, CLOSE LV-204105 AND XV-204181

I 20411 ON LOW FLOW FI-204116, STOP P-20412 AND B-20406

I 20412 ON LOW LI-204127, STOP P-20412
ON LOW LOW LI-204127, STOP P-20425

I 20413 WHEN T.O. NOT ON TEMP, STOP B-20406

I 20414 ON LOW FI-204147, STOP B-20406

I 20415 ON LOW PI-204175, STOP B-20406

I 20416 WHEN XV-204161 OPEN, STOP B-20406

I 20417 ON HIGH PI-204122A, CLOSE TV-204171

I 20418 ON HIGH DPI-204122, CLOSE TV-204171

I 20419 ON HIGH LEVEL IN T-20402, CLOSE FV-204117

I 20420 ON LOW TI-204139 OR P-20412 NOT RUNNING, CLOSE FV-204117

I 20421 ON LOW DI-204120, CLOSE FV-204117

I 20422 WHEN CHILLED WATER SYSTEM NOT OPERATING, CLOSE TV-204171

I 20430 WHEN T.O. NOT ON TEMP OR B-20406 NOT OPERATING OR P-20412 NOT OPERATING
OR TI-204165 HIGH, CLOSE TV-204171

I 20431 ON LOW STEAM SYSTEM PRESSURE, CLOSE TV-204171

I 20432 ON LOW TI-204165, CLOSE FV-204117

PRELIMINARY

| no. | description | date | by | app. |
|---|---|---|---|---|
| P0 | PRELIMINARY | 18.05.16 | Danuta | N.R. |

REVISIONS

| | by: | date: |
|---|---|---|
| design.: | K.F. | 18.05.16 |
| drawn: | Danuta | 18.05.16 |
| check.: | N.R. | 18.05.16 |
| appr.: | | |

title: ELCON-USA

title: UNIT 20
AREA 400
INTERLOCKS LIST

elcon

| proj. no | dwg. no: | issue: |
|---|---|---|
| – | USA-20400-01-030 | P0 |
| comp. dwg. no: USA-20400-01-030 | | |

,D\:Y 9D\:Y\PI&D\PRELIMINARY\LAST VERSIONS (ALL UNITS)\UNIT 20\USA-20400-01-030_P0.dwg, 16/06/2016 14:14:51

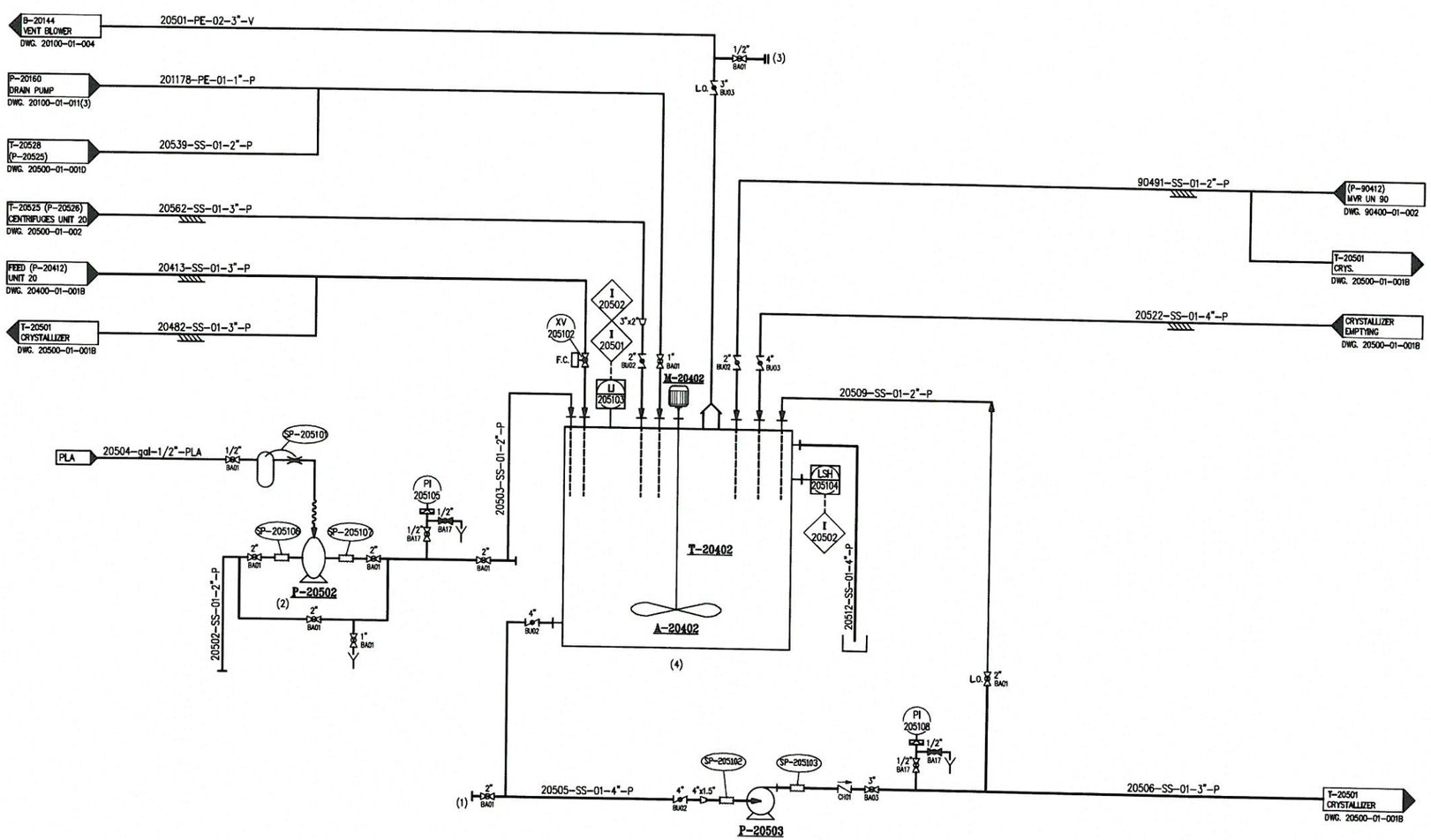


PRELIMINARY

NOTES:

1. SCREW CONNECTION FOR WASHING.
2. CUBES UNLOADING SYSTEM.
3. OPTION FOR PI IF NEEDED.
4. FLAT BOT. TANK.

| TAG No. | A-20402 | T-20402 | P-20503 | P-20502 |
|---|---|---|---|---|
| Service | AGITATOR | CRYSTALLIZER FEED TANK | TRANSFER PUMP | TRANSFER PUMP |
| Fluid | WASTE WITH 25% SALTS | BRINE 20% | WASTE WITH 25% SALTS | WASTE |
| Size | | 50 m3 | 30 m3/h; 25 m | 1.5" DIAPH. |
| Mat. of const. | SS 316 | CS | SS 316 | SS/TFE |
| Remarks | | | | |

| no. | description | date | by | ע"מ |
|---|---|---|---|---|
| P1 | INTERLOCKS UPDATE | 03.08.16 | Danuta | N.R. |
| P0 | PRELIMINARY | 15.11.15 | Danuta | N.R. |

REVISIONS

| | by: | date: |
|---|---|---|
| design.: | K.F. | 15.11.15 |
| drawn: | Danuta | 15.11.15 |
| check.: | N.R. | 15.11.15 |
| appr.: | | |

title: ELCON-USA

title: UNIT 20 CRYSTALLIZER P & I DIAGRAM

proj no: -

dwg. no: USA-20500-01-001A

comp. dwg. no: USA-20500-01-001A

issue: P1

elcon

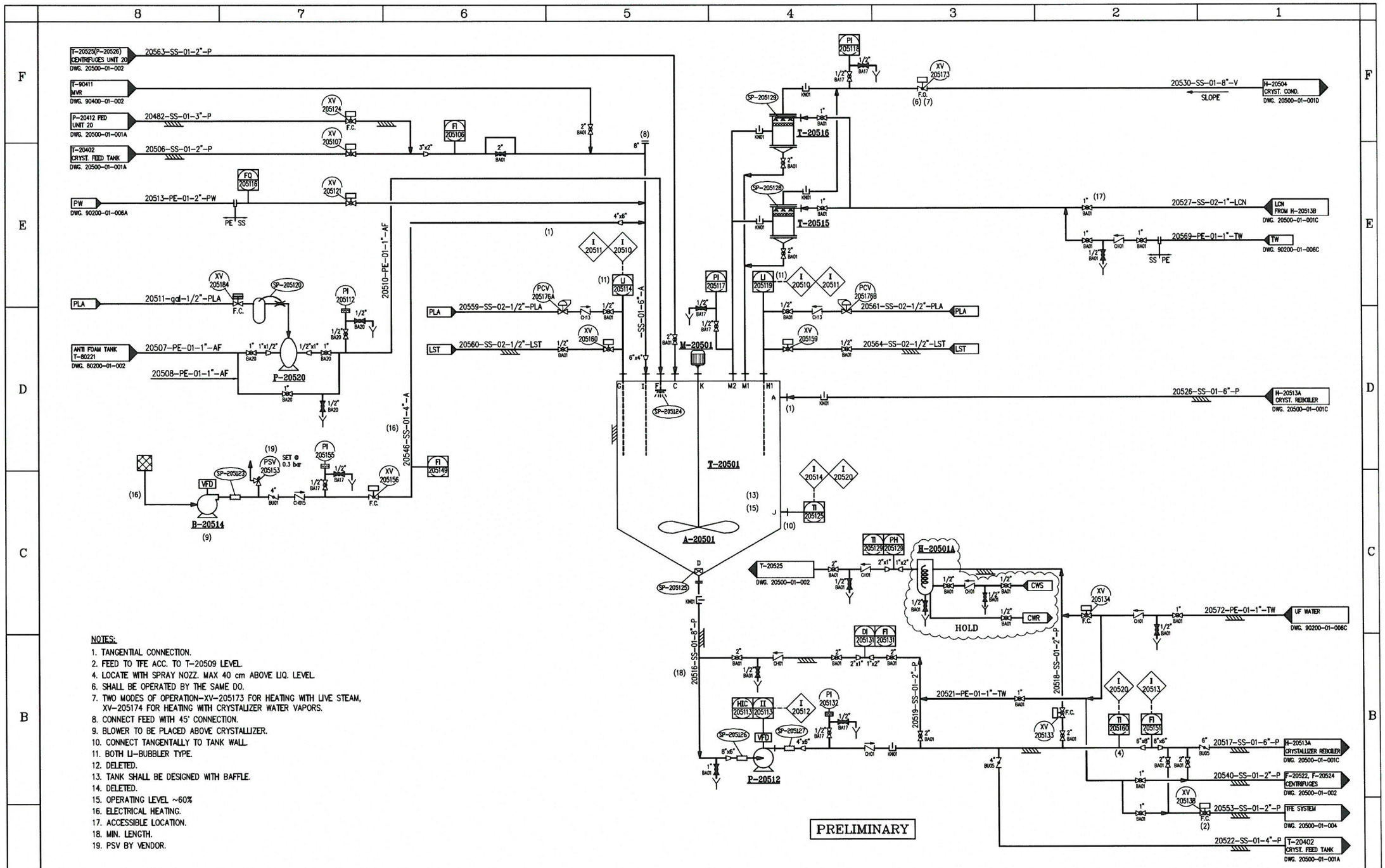


PRELIMINARY

NOTES:

1. TANGENTIAL CONNECTION.
2. FEED TO TFE ACC. TO T-20509 LEVEL.
4. LOCATE WITH SPRAY NOZZ. MAX 40 cm ABOVE LIQ. LEVEL.
6. SHALL BE OPERATED BY THE SAME DO.
7. TWO MODES OF OPERATION-XV-205173 FOR HEATING WITH LIVE STEAM, XV-205174 FOR HEATING WITH CRYSTALIZER WATER VAPORS.
8. CONNECT FEED WITH 45' CONNECTION.
9. BLOWER TO BE PLACED ABOVE CRYSTALLIZER.
10. CONNECT TANGENTALLY TO TANK WALL.
11. BOTH LI-BUBBLER TYPE.
12. DELETED.
13. TANK SHALL BE DESIGNED WITH BAFFLE.
14. DELETED.
15. OPERATING LEVEL ~60%
16. ELECTRICAL HEATING.
17. ACCESSIBLE LOCATION.
18. MIN. LENGTH.
19. PSV BY VENDOR.

| TAG No. | A-20501 | T-20501 | P-20512 | B-20514 | T-20515 | T-20516 | P-20520 |
|---|---|---|---|---|---|---|---|
| Service | CRYSTALLIZER AGITATOR | CRISTALLIZER | CIRCULATING PUMP | FRESH AIR BLOWER TO CRYST. | TANK | TANK | ANTI FOAM PUMP |
| Fluid | 60% BRINE | BRINE 20%-70% | 60% BRINE | FRESH AIR | VAPORS | VAPORS | ANTI FOAM |
| Size | | 20 m3 | 250 m3/h, 4 mLc | 300-500 Nm3/h, 1.5 mLc | D=650 mm A=1000 mm | D=650 mm A=1000 mm | 0.5" AIR DIAPH. |
| Mat. of const. | SS316 | SS | SS316 | SS | SS | SS | PP |
| Remarks | 7.5 hp | | | | | | |

| no. | description | date | by | sup. |
|---|---|---|---|---|
| P1 | INTERLOCKS UPDATE | 03.08.16 | Danuta | N.R. |
| P0 | PRELIMINARY | 15.11.15 | Danuta | N.R. |

REVISIONS

| | by: | date: |
|---|---|---|
| design.: | K.F. | 15.11.15 |
| drawn: | Danuta | 15.11.15 |
| check.: | N.R. | 15.11.15 |
| appr.: | | |

title: ELCON-USA

title: UNIT 20 CRYSTALLIZER P & I DIAGRAM

proj. no: –

dwg. no: USA-20500-01-001B

comp. dwg. no: USA-20500-01-001B

issue: P1

elcon

Y:\PI&D\PRELIMINARY\LAST VERSIONS (ALL UNITS)\UNIT 20\USA-20500-01-001B P1.dwg, 04/08/2016 09:15:22

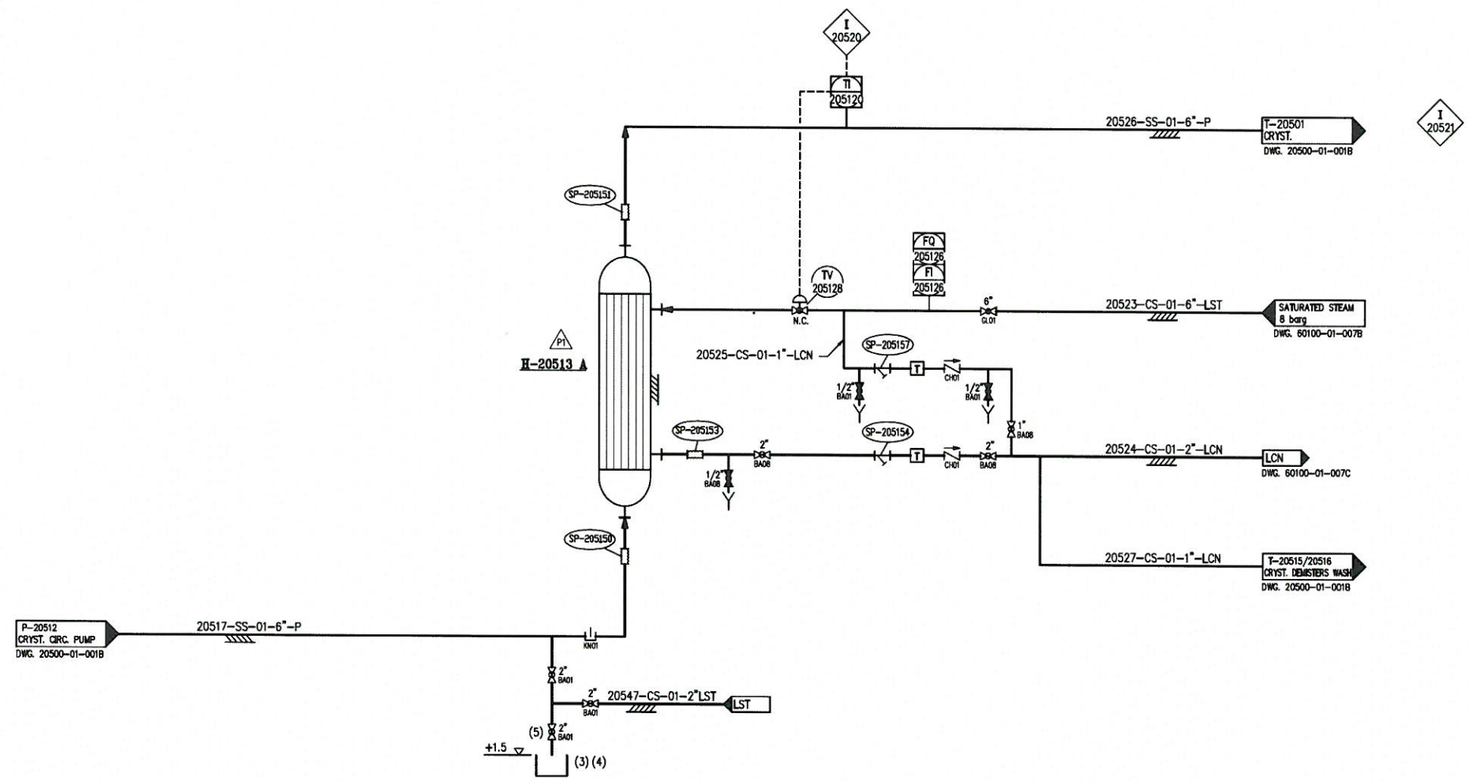


NOTES:

1. DELETED.
2. DELETED.
3. LOCATE IN A POSITION TO PROTECT WORKERS AT UNLOADING PROCEDURE.
4. CRYSTALIZER UNLOADING.
5. SPECIAL VALVE LOCATED AT PIPE BOTTOM.

PRELIMINARY

| TAG No. | H-20513A |
|---|---|
| Service | CRYSTALIZER REBOILER |
| Fluid | |
| Size | 2.5-3x10⁶ Kcal/h ~700 m² |
| Mat. of const. | SS |
| Remarks | |

| no. | description | date | by | app. |
|---|---|---|---|---|
| P1 | INTERLOCKS UPDATE | 03.08.16 | Danuta | N.R. |
| P0 | PRELIMINARY | 15.11.15 | Danuta | N.R. |

REVISIONS

| | by: | date: |
|---|---|---|
| design.: | K.F. | 15.11.15 |
| drawn: | Danuta | 15.11.15 |
| check.: | N.R. | 15.11.15 |
| appr.: | | |

title: ELCON-USA

title: UNIT 20 CRYSTALIZER P & I DIAGRAM

elcon engineering

proj. no: –

dwg. no: USA-20500-01-001C

comp. dwg. no: USA-20500-01-001C

issue: P1

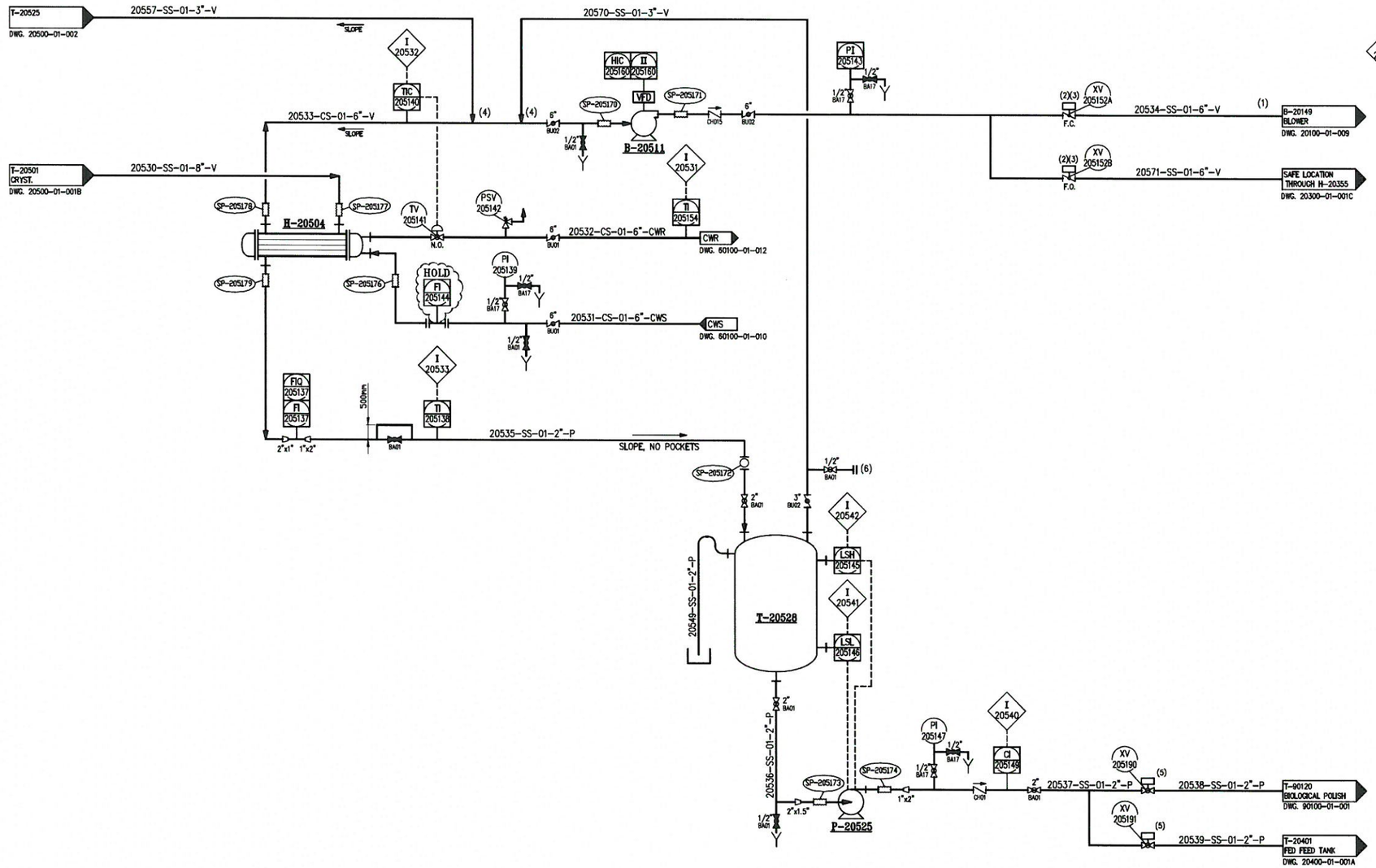


NOTES:

1. LINE SHALL BE DESIGNED WITH SLOPE AND NO POCKETS BECAUSE OF CONDENSATION.
2. SHALL BE OPERATED BY THE SAME DO.
3. IN CASE OF NO AIR TO VALVE – N.O. TO ATM.
4. CONNECT WITH FLOW DIRECTION.
5. DECISION ACC. TO CI-205149 VALVE.
6. OPTIONAL FOR PI IF NEEDED.

PRELIMINARY

| TAG No. | H-20504 | B-20511 | P-20525 | T-20528 |
|---|---|---|---|---|
| Service | CRYSTALLIZER CONDENSER | CRYSTALLIZER BLOWER | CRYSTALLIZER DISTILLATE PUMP | CRYSTALLIZER DISTILLATE TANK |
| Fluid | | AIR AND GAS FROM CRYSTALLIZER | WATER | EFLUENT WATER |
| Size | 1.4x10⁶ Kcal/h, 58 m2 | 500 Nm3/h, 1000 mbar | 10 m3/h, 30 m | 3 m3 |
| Mat. of const. | SS | SS316 | SS316 | SS |
| Remarks | | EX. PROOF | | |

| no. | description | date | by | app. |
|---|---|---|---|---|
| P1 | INTERLOCKS UPDATE | 03.08.16 | Danuta | N.R. |
| P0 | PRELIMINARY | 15.11.15 | Danuta | N.R. |

REVISIONS

| | by | date |
|---|---|---|
| design.: | K.F. | 15.11.15 |
| drawn: | Danuta | 15.11.15 |
| check.: | N.R. | 15.11.15 |
| appr.: | | |

title: ELCON-USA

title: UNIT 20 CRYSTALLIZER P & I DIAGRAM

proj. no: –

dwg. no: USA-20500-01-001D

comp. dwg. no: USA-20500-01-001D

issue: P1

Y:\PI&D\PRELIMINARY\LAST VERSIONS (ALL UNITS)\UNIT 20\USA-20500-01-001D P1.dwg, 04/08/2016 09:17:45

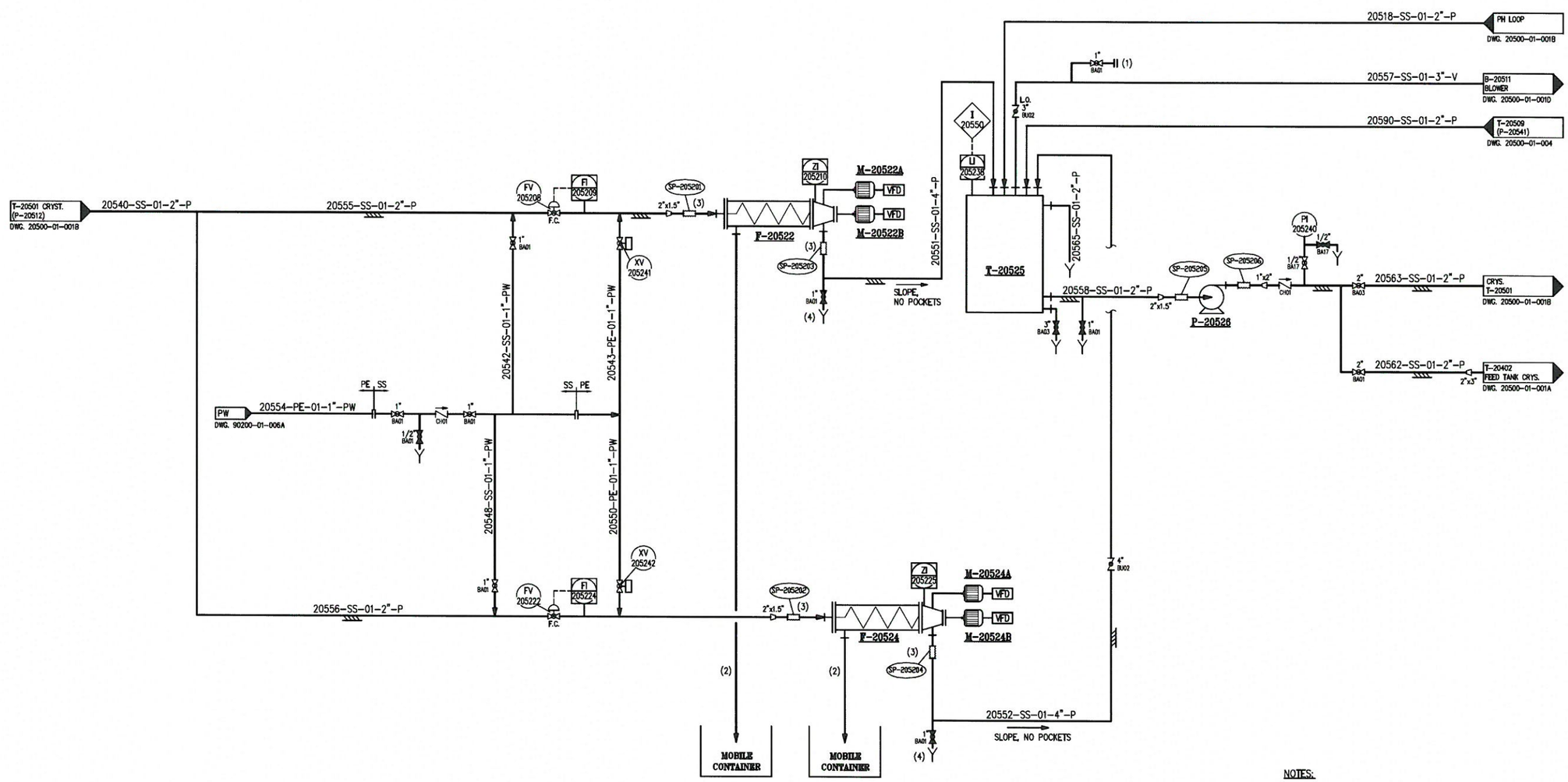


NOTES:

1. OPTIONAL FOR PI IF NEEDED.
2. LINE WITH BIG DIAM. TO AVOID BLOCKAGE.
3. HOSE 1.5 m LENGTH.
4. LOCATED ON HORIZONTAL LINE.
5. CONNECT WITH FLOW DIRECTION.
6. DELETED.
7. DELETED.
8. DELETED.
9. DELETED.

PRELIMINARY

| TAG No. | F-20522 | F-20524 | P-20526 | T-20525 |
|---|---|---|---|---|
| Service | CENTRIFUGE | CENTRIFUGE | BRINE TRANS. PUMP | TANK |
| Fluid | BRINE TS=60% | BRINE TS=60% | BRINE AFTER CONCENTRATION | BRINE AFTER CONCENTRATION |
| Size | 5 m3/h | 5 m3/h | 30 m3/h, 30mLc | 1.5-2 m3 |
| Mat. of const. | SS316 | SS316 | SS | SS |
| Remarks | | | | |

| no. | description | date | by | app. |
|---|---|---|---|---|
| P1 | INTERLOCKS UPDATE | 03.08.16 | Danuta | N.R. |
| P0 | PRELIMINARY | 15.11.15 | Danuta | N.R. |

REVISIONS

| | by: | date: |
|---|---|---|
| design.: | K.F. | 15.11.15 |
| drawn: | Danuta | 15.11.15 |
| check.: | N.R. | 15.11.15 |
| appr.: | | |

title: ELCON-USA

title: UNIT 20 SALTS CONCENTRATION & OVEN P & I DIAGRAM

elcon

proj. no: –

dwg. no: USA-20500-01-002

comp. dwg. no: USA-20500-01-002

issue: P1

מ:\Y\PI&D\PRELIMINARY LAST VERSIONS (ALL UNITS)\UNIT 20\USA-20500-01-002_P1.dwg, 04/08/2016 09:19:27

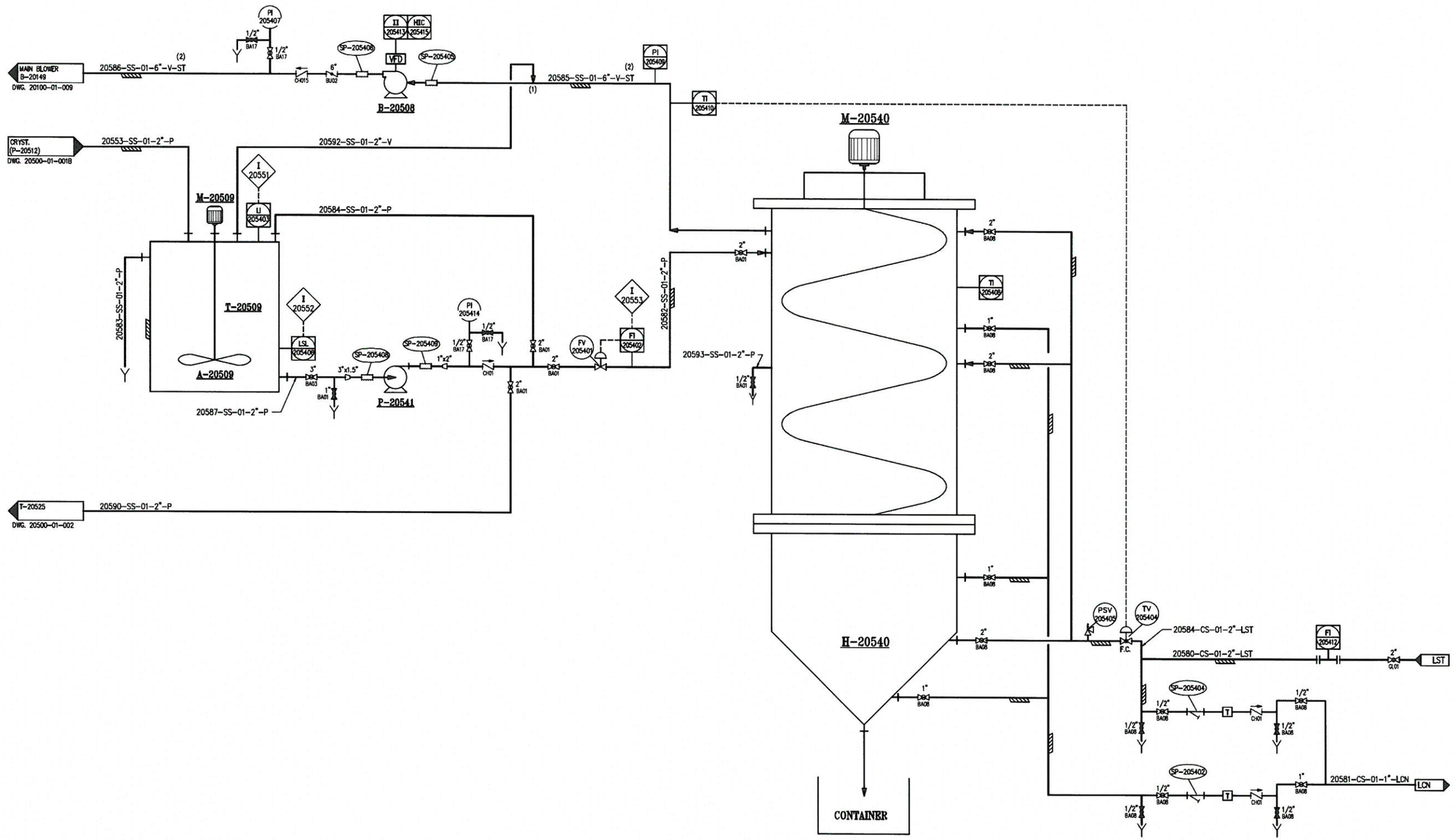


PRELIMINARY

NOTES:
1. CONNECT WITH FLOW DIRECTION.
2. TRACING.

| TAG No. | B-20508 | A-20509 | T-20509 | A-20540 | H-20540 | P-20541 |
|---|---|---|---|---|---|---|
| Service | BLOWER | AGITATOR | TFE FEED TANK | AGITATOR | EVAPORATOR | TRANSFER PUMP |
| Fluid | 60% BRINE | 60% BRINE | 60% BRINE | 60% BRINE | 60% BRINE | 60% BRINE |
| Size | 500 Nm³/h, 300 mm H₂O | | 2-5 m3 | | | 2 m³/h, 20 mLc |
| Mat. of const. | SS | SS | SS | SS | SS | SS |
| Remarks | | | | | | |

| no. | description | date | by | app. |
|---|---|---|---|---|
| P1 | INTERLOCKS UPDATE | 03.08.16 | Danuta | N.R. |
| P0 | PRELIMINARY | 15.11.15 | Danuta | N.R. |

REVISIONS

| | by: | date: |
|---|---|---|
| design.: | K.F. | 15.11.15 |
| drawn.: | Danuta | 15.11.15 |
| check.: | N.R. | 15.11.15 |
| appr.: | | |

title: ELCON-USA

title: UNIT 20 TFE SYSTEM P & I DIAGRAM

elcon

proj. no: –

dwg. no: USA-20500-01-004

comp. dwg. no: USA-20500-01-004

issue: P1

I 20501 ON LOW LEVEL LI-205103, STOP PUMP P-20503 AND A-20402

I 20502 ON HIGH LEVEL LI-205103 OR LSH-205104, DONT ALLOW INLET INTO TANK T-20402 AND CLOSE XV-205102

I 20510 ON HIGH LEVEL LI-205114 OR LI-205119, CLOSE XV-205107, XV-205121, XV-205124, FV-205208, FV-205222 AND STOP RELEVANT PUMPS

I 20511 ON LOW LEVEL LI-205114 OR LI-205119, CLOSE P-20512 AND A-20501 AND B-20514

I 20512 WHEN A-20501 OR P-20512 OR B-20511 NOT RUNNING, STOP ALL INLET TO T-20501 (XV-205107, XV-205124, FV-205208, FV-205222), ALLOW ONLY PH INLET (XV-205121)

I 20513 ON FI-205151 LOW FLOW, CLOSE P-20512

I 20514 ON LOW TI-205125, CLOSE FV-205208 AND FV-205222

I 20520 ON TI-205120 OR TI-205125 OR TI-205160 HIGH TEMP., CLOSE TV-205128

I 20521 ON STEAM SYSTEM LOW PRESSURE, CLOSE TV-205125

I 20530 WHEN T.O. NOT ON TEMP., CLOSE XV-205152A AND TV-205128, OPEN XV-205152B

I 20531 ON TI-205154 HIGH TEMP., CLOSE TV-205128

I 20532 ON TI-205140 HIGH TEMP., CLOSE TV-205128

I 20533 ON TI-205138 HIGH TEMP., CLOSE TV-205128

I 20540 ON HIGH CI-205149, CLOSE XV-205190 AND OPEN XV-205191

I 20541 ON LSL-205146, CLOSE P-20525

I 20542 ON LSH-205145, OPEN P-20525, IF LSH IS ON FOR 30 sec. AND P-20525 OPERATING, CLOSE TV-205128

I 20550 ON LI-205328 LOW, CLOSE P-20526
ON LI-205328 HIGH HIGH, CLOSE FV-205208 AND FV-205222 AND XV-205138

I 20551 ON HIGH LI-205403, CLOSE XV-205138

I 20552 ON LSL-205409, CLOSE P-20541

I 20553 ON LOW FI-205402, CLOSE TV-25404

PRELIMINARY

| no. | description | date | by | chk. |
|---|---|---|---|---|
| P0 | PRELIMINARY | 03.08.16 | Danuta | N.R. |

REVISIONS

| | by: | date: |
|---|---|---|
| design.: | K.F. | 03.08.16 |
| drawn: | Danuta | 03.08.16 |
| check.: | N.R. | 03.08.16 |
| appr.: | | |

title: ELCON-USA

title: UNIT 20
AREA 500
INTERLOCKS LIST

elcon

| proj. no | dwg. no | issue |
|---|---|---|
| – | USA-20500-01-010 | P0 |
| comp. dwg. no: USA-20500-01-010 | | |

J:\Y 50\:Y\PI&D\PRELIMINARY\LAST VERSIONS (ALL UNITS)\UNIT 20\USA-20500-01-010_P0.dwg, 04/08/2016 14:15:20

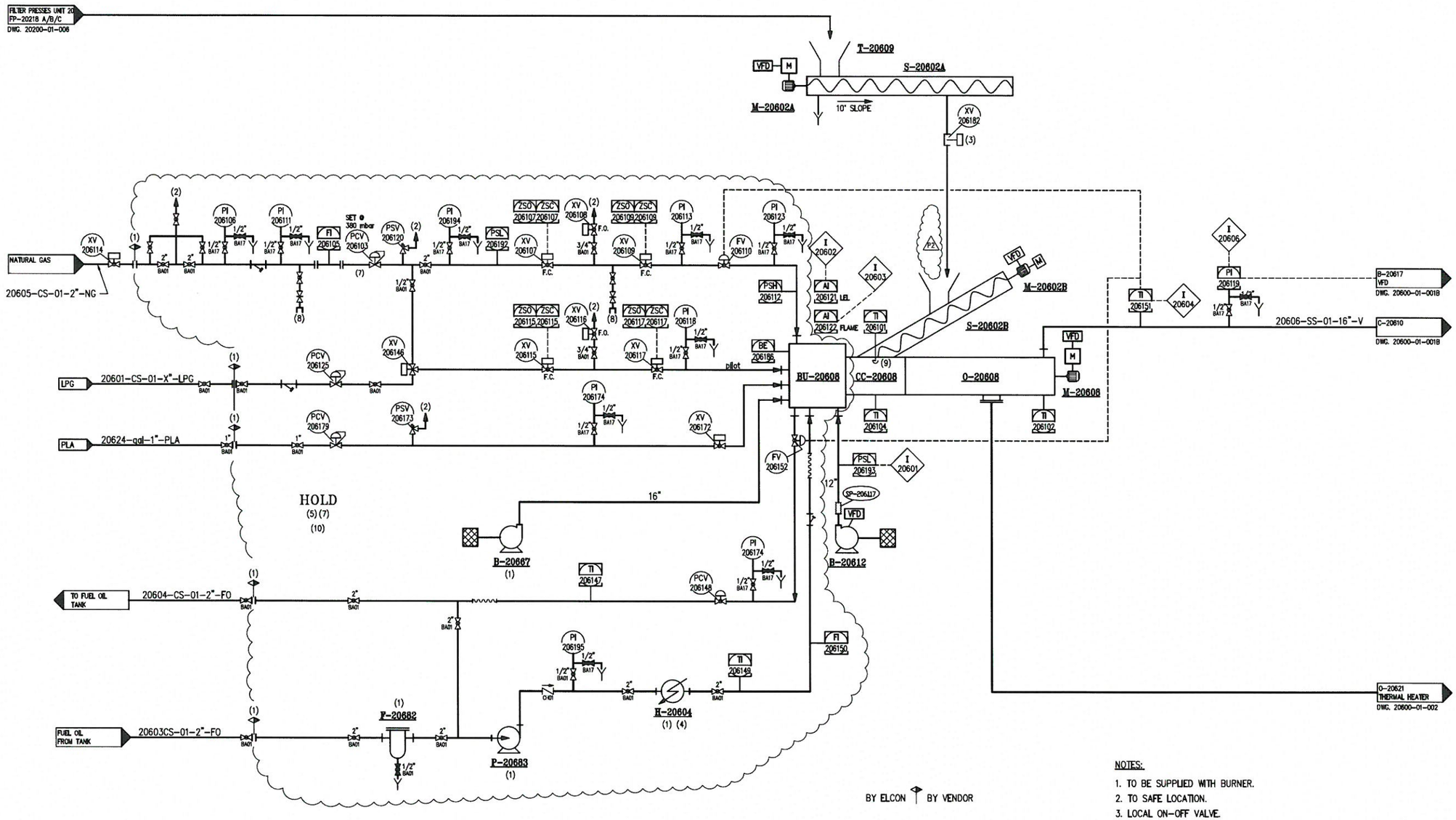


PRELIMINARY

NOTES:

1. TO BE SUPPLIED WITH BURNER.
2. TO SAFE LOCATION.
3. LOCAL ON-OFF VALVE.
4. ELECTRICAL HEATER
5. TO BE UPDATED ACC. TO BURNER'S VENDOR RECOMENDATION.
6. FUTURE OPTION.
7. ALL NATURAL GAS TRAIN INSTRUMENTATION – TO LOCAL CONTROL PANEL.
8. N2 CONNECTION
9. TEMPERATURE MEASURMENT INSIDE THE HEATER.
10. INTERLOCKS WILL BE UPDATED ACC. TO VENDOR RECOMENDATION.

| TAG No. | S-20602A | S-20602B | H-20604 | BU-20608 | CC-20608 | O-20608 | T-20609 | B-20612 | B-20667 | F-20682 | P-20683 | T-20684 |
|---|---|---|---|---|---|---|---|---|---|---|---|---|
| Service | SLUDGE FEED SCREW | SLUDGE FEED SCREW | FUEL OIL HEATER | BURNER OF ROTARY OVEN | COMBUSTION CHAMBER OF ROTARY OVEN | ROTARY HEATER | HOOPER | DILUTION AIR BLOWER | BURNER AIR BLOWER | FUEL OIL FILTER | FUEL OIL CIRCULATION PUMP | FEED HOOPER |
| Fluid | SLUDGE 30% SOLIDS | SLUDGE 30% SOLIDS | 10 kW | | | SLUDGE | SLUDGE | AIR | | | | |
| Size | 1.5 ton/h | 1.5 ton/h | | | | 1500 kg/h | | 4000 Nm3/h 700 mm H20 | | | 140 kg/hr 0.75 kW | |
| Mat. of const. | SS | SS | ELECTRICAL | CS | CS | CS | SS | CS | | | | SS |
| Remarks | | | BY BURNER VENDOR | | | 550°C | HOLD | | BY VENDOR | BY BURNER VENDOR | BY BURNER VENDOR | HOLD (6) |

| no. | description | date | by | app. |
|---|---|---|---|---|
| P2 | INLET DELETED | 23.08.16 | Danuta | N.R. |
| P1 | INTERLOCKS UPDATE | 03.08.16 | Danuta | N.R. |
| P0 | PRELIMINARY | 15.11.15 | Danuta | N.R. |

REVISIONS

| | by: | date: |
|---|---|---|
| design.: | K.F. | 15.11.15 |
| drawn: | Danuta | 15.11.15 |
| check.: | N.R. | 15.11.15 |
| appr.: | | |

elcon engineering

title: ELCON-USA

title: UNIT 20
SLUDGE DRYING – ROTARY DRYER
P & I DIAGRAM

proj. no: –
dwg. no: USA-20600-01-001A
issue: P2
comp. dwg. no: USA-20600-01-001A

J:\Y DJ\Y\PI&D\PRELIMINARY\LAST VERSIONS (ALL UNITS)\UNIT 20\USA-20600-01-001A_P2.dwg, 23/08/2016 10:24:16

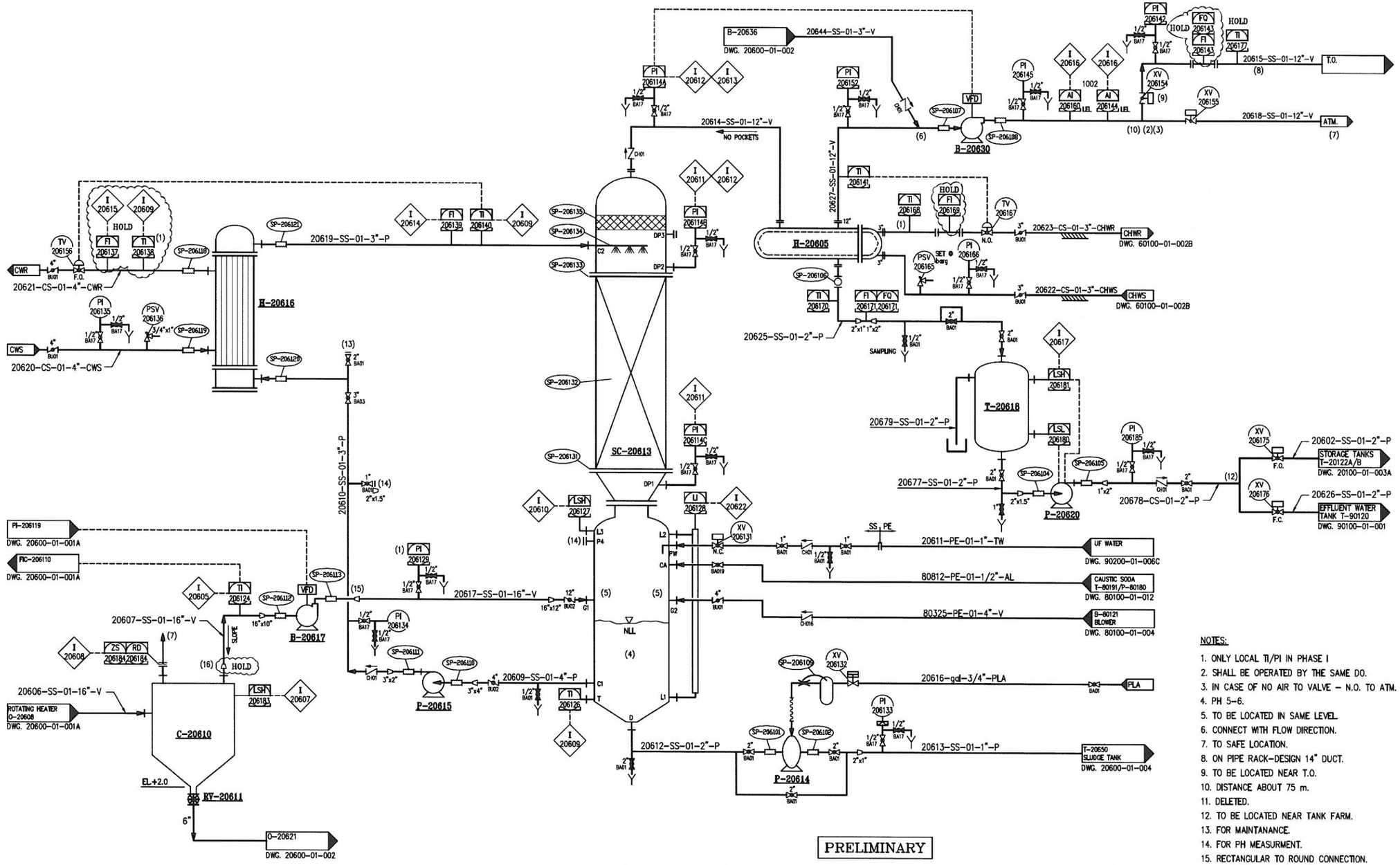


NOTES:

1. ONLY LOCAL TI/PI IN PHASE I
2. SHALL BE OPERATED BY THE SAME DO.
3. IN CASE OF NO AIR TO VALVE – N.O. TO ATM.
4. PH 5–6.
5. TO BE LOCATED IN SAME LEVEL.
6. CONNECT WITH FLOW DIRECTION.
7. TO SAFE LOCATION.
8. ON PIPE RACK–DESIGN 14" DUCT.
9. TO BE LOCATED NEAR T.O.
10. DISTANCE ABOUT 75 m.
11. DELETED.
12. TO BE LOCATED NEAR TANK FARM.
13. FOR MAINTANANCE.
14. FOR PH MEASURMENT.
15. RECTANGULAR TO ROUND CONNECTION.
16. 540 mm x 16".

| TAG No. | H-20605 | C-20610 | RV-20611 | SC-20613 | | P-20614 | P-20615 | H-20616 | B-20617 | T-20618 | P-20620 | B-20630 |
|---|---|---|---|---|---|---|---|---|---|---|---|---|
| Service | SCRUBBER'S CONDENSER | CYCLONE | CYCLONE BOTTOM ROTARY VALVE | SCRUBBER COLUMN | SCRUBBER TANK | SLUDGE PUMP | WET SCRUBBER CIRCULATION PUMP | HEAT EXCHANGER | DRYER BLOWER AIR | DISTILLATE TANK | TRANSFER PUMP | SCRUBBER BLOWER |
| Fluid | | DUST/AIR | | PACKING | WATER | SLUDGE | WATER | WATER | AIR | DISTILLATE | DISTILLATE | |
| Size | 290000 Kcal/h 34 m² | | 10 kg/h 6" 150 mm | I.D. = 1400 mm H = 4800 mm | I.D. = 1800 mm H = 2900 mm | 2" AIR DIAPH. | 40 m³/h 30 mLc | 750,000 Kcal/h 115 m² | 5000 Nm³/h 200 mLc | 2–3 m³ | 5–10 m³/h 30 mLc | 5000 Nm³/h 500 mm H20, 45 kW |
| Mat. of const. | SS304 | SS | CS | SS | SS | PP | SS | SS304 | SS | PE/SS/CS | SS | SS |
| Remarks | SHELL & TUBE BEU | | | PACKED TOWER | | | | SHELL & TUBE BEM | EX. PROOF | | | EX. PROOF |

| no. | description | date | by | app. |
|---|---|---|---|---|
| P1 | INTERLOCKS UPDATE | 03.08.16 | Danuta | N.R. |
| P0 | PRELIMINARY | 15.11.15 | Danuta | N.R. |

REVISIONS

| | by: | date: |
|---|---|---|
| design.: | K.F. | 15.11.15 |
| drawn: | Danuta | 15.11.15 |
| check.: | N.R. | 15.11.15 |
| appr.: | | |

title: ELCON–USA

title: UNIT 20 ROTARY DRYER SCRUBBING SYSTEM P & I DIAGRAM

proj. no: –

dwg. no: USA–20600–01–001B

comp. dwg. no: USA–20600–01–001B

issue: P1

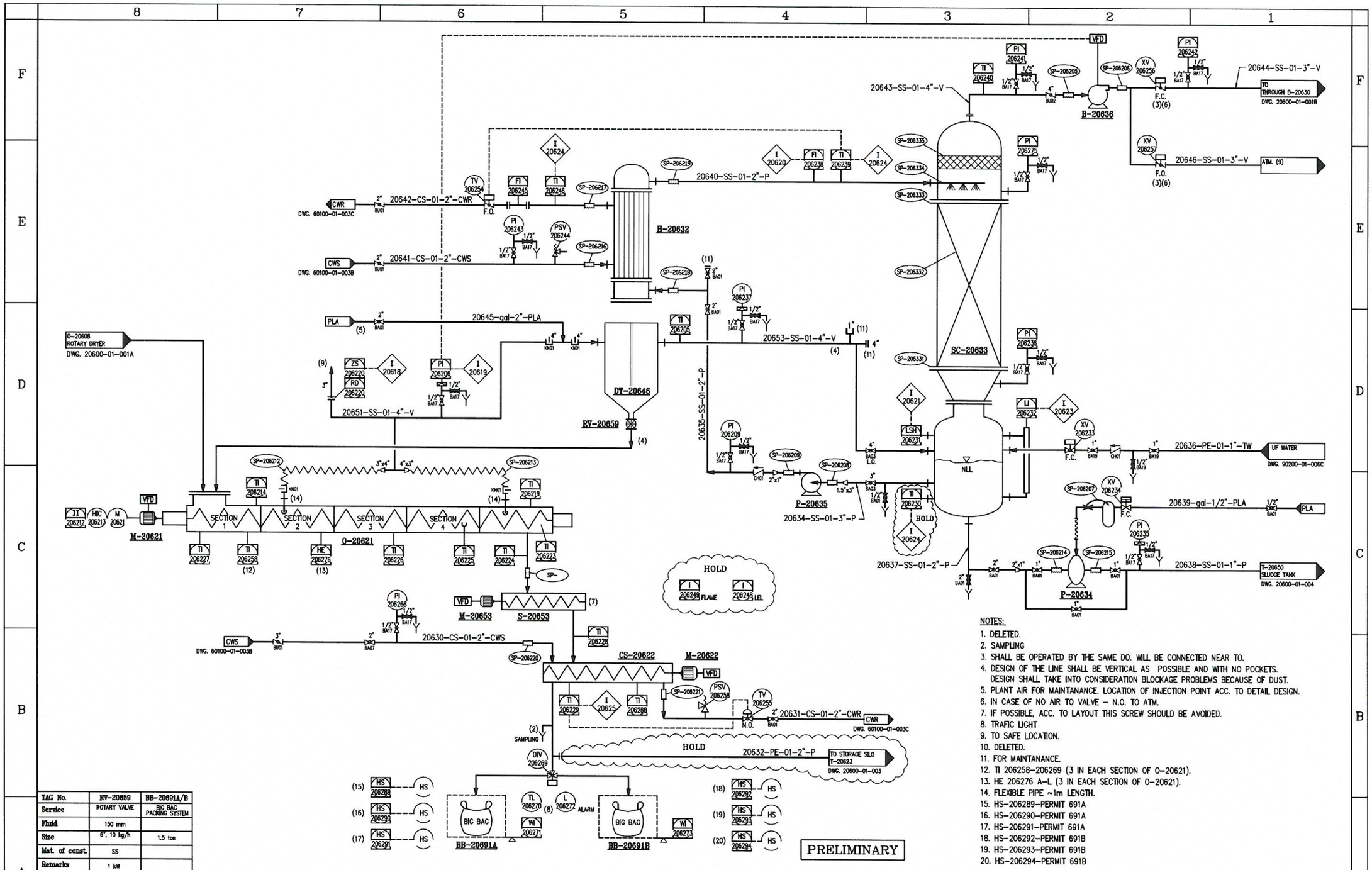


NOTES:

1. DELETED.
2. SAMPLING
3. SHALL BE OPERATED BY THE SAME DO. WILL BE CONNECTED NEAR TO.
4. DESIGN OF THE LINE SHALL BE VERTICAL AS POSSIBLE AND WITH NO POCKETS. DESIGN SHALL TAKE INTO CONSIDERATION BLOCKAGE PROBLEMS BECAUSE OF DUST.
5. PLANT AIR FOR MAINTANANCE. LOCATION OF INJECTION POINT ACC. TO DETAIL DESIGN.
6. IN CASE OF NO AIR TO VALVE – N.O. TO ATM.
7. IF POSSIBLE, ACC. TO LAYOUT THIS SCREW SHOULD BE AVOIDED.
8. TRAFIC LIGHT
9. TO SAFE LOCATION.
10. DELETED.
11. FOR MAINTANANCE.
12. TI 206258-206269 (3 IN EACH SECTION OF O-20621).
13. HE 206276 A-L (3 IN EACH SECTION OF O-20621).
14. FLEXIBLE PIPE ~1m LENGTH.
15. HS-206289-PERMIT 691A
16. HS-206290-PERMIT 691A
17. HS-206291-PERMIT 691A
18. HS-206292-PERMIT 691B
19. HS-206293-PERMIT 691B
20. HS-206294-PERMIT 691B

PRELIMINARY

| TAG No. | RV-20659 | BB-20691A/B |
|---|---|---|
| Service | ROTARY VALVE | BIG BAG PACKING SYSTEM |
| Fluid | 150 mm | |
| Size | 6", 10 kg/h | 1.5 ton |
| Mat. of const. | SS | |
| Remarks | 1 kW | |

| TAG No. | O-20621 | CS-20622 | H-20632 | SC-20633 | | P-20634 | P-20635 | B-20636 | RV-20640 | DT-20646 | S-20653 |
|---|---|---|---|---|---|---|---|---|---|---|---|
| Service | THERMAL HEATER | COOLING SCREW | HEAT EXCHANGER | SCRUBBER COLUMN | SCRUBBER TANK | SLUDGE PUMP | WET SCRUBBER CIRCULATION PUMP | EXHAUST BLOWER | SCREW CONVEYOR | DUST TANK | SCREW |
| Fluid | SLUDGE 30% | SLUDGE 100% DRY | WATER | PACKING | WATER | SLUDGE | BRINE | AIR+WATER VAPORS | | | SLUDGE 100% DRY |
| Size | 300-500 kg/h | 220 kg/h 300,000 kcal/h | 400.000 kcal/h 12 m2 | I.D.=20" (488mm) H = 4.1 m | 3 m3 D=1.2m, L=2.7m | 1" AIR DIAPH. | 10-20 m3/h; 30 mLc | 350 Nm3/h 200 mm | | | 200 kg/h |
| Mat. of const. | SS | CS | SS | SS316L | SS316L | PP | | SS | SS | SS | SS |
| Remarks | 200 kW | | SHELL & TUBE BEM | PACKED TOWER | | | | | | | |

| no. | description | date | by | sp. |
|---|---|---|---|---|
| P1 | INTERLOCKS UPDATE | 03.08.16 | Danuta | N.R. |
| P0 | PRELIMINARY | 15.11.15 | Danuta | N.R. |

REVISIONS

| | by: | date: |
|---|---|---|
| design.: | K.F. | 15.11.15 |
| drawn: | Danuta | 15.11.15 |
| check.: | N.R. | 15.11.15 |
| appr.: | | |

title: ELCON-USA

title: UNIT 20 SLUDGE DRYING-THERMAL TREATMENT P & I DIAGRAM

elcon

proj. no: –

dwg. no: USA-20600-01-002

comp. dwg. no: USA-20600-01-002

issue: P1

D:\:Y 9D\:Y\PI&D\PRELIMINARY\LAST VERSIONS (ALL UNITS)\UNIT 20\USA-20600-01-002_P1.dwg, 03/08/2016 11:04:13

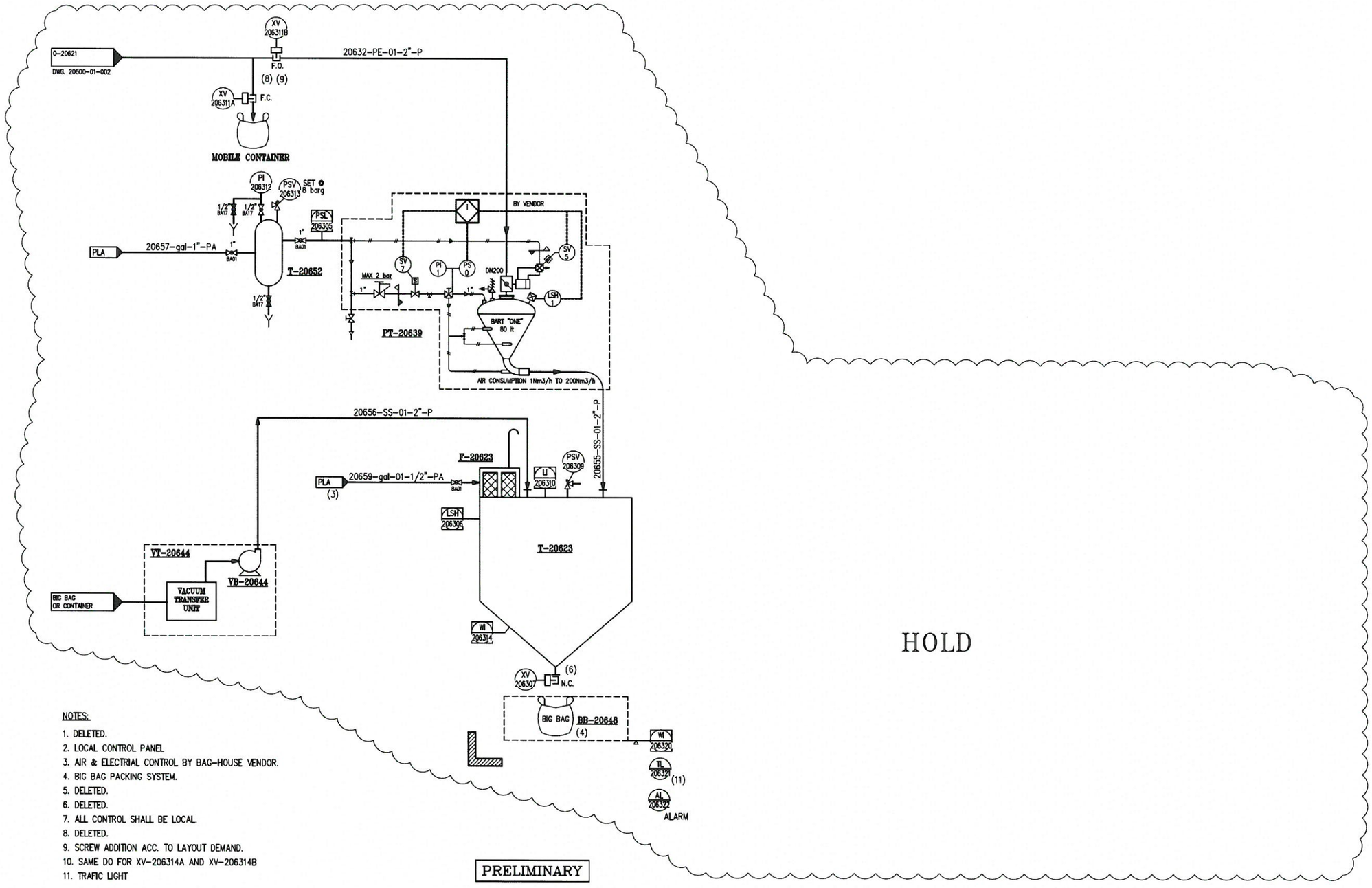


NOTES:

1. DELETED.
2. LOCAL CONTROL PANEL
3. AIR & ELECTRIAL CONTROL BY BAG-HOUSE VENDOR.
4. BIG BAG PACKING SYSTEM.
5. DELETED.
6. DELETED.
7. ALL CONTROL SHALL BE LOCAL.
8. DELETED.
9. SCREW ADDITION ACC. TO LAYOUT DEMAND.
10. SAME DO FOR XV-206314A AND XV-206314B
11. TRAFIC LIGHT

PRELIMINARY

| TAG No. | F-20623 | T-20623 | PT-20639 | VB-20644 | VT-20644 | BB-20648 | T-20652 |
|---|---|---|---|---|---|---|---|
| Service | BAG FILTER | SLUDGE SILO | PNEUMATIC TRANSFER UNIT | BLOWER OF VACUUM TRANSFER UNIT | VACUUM TRANSFER UNIT | BIG BAG PACKING SYSTEM | AIR SURGE TANK |
| Fluid | | SLUDGE | DRY SLUDGE/AIR | | | | COMPRESSED AIR |
| Size | | 50-100 m3 Q=10000 Kcal/h | | | | | 200-500 lit |
| Mat. of const. | | SS | | | | | CS |
| Remarks | | | | SUPPLIED BY VENDOR | OF TRANSFER UNIT | | |

| no. | description | date | by | app. |
|---|---|---|---|---|
| P1 | FOR APPROVAL | 03.08.16 | Danuta | N.R. |
| P0 | PRELIMINARY | 15.11.15 | Danuta | N.R. |

REVISIONS

| | by: | date: |
|---|---|---|
| design.: | K.F. | 15.11.15 |
| drawn: | Danuta | 15.11.15 |
| check.: | N.R. | 15.11.15 |
| appr.: | | |

title: ELCON-USA

title: UNIT 20 SLUDGE STORAGE P & I DIAGRAM

proj. no: –

dwg. no: USA-20600-01-003

comp. dwg. no: USA-20600-01-003

issue: P1

...D\:Y 5D\:Y\PI&D\PRELIMINARY\LAST VERSIONS (ALL UNITS)\UNIT 20\USA-20600-01-003_P1.dwg, 03/08/2016 11:05:31

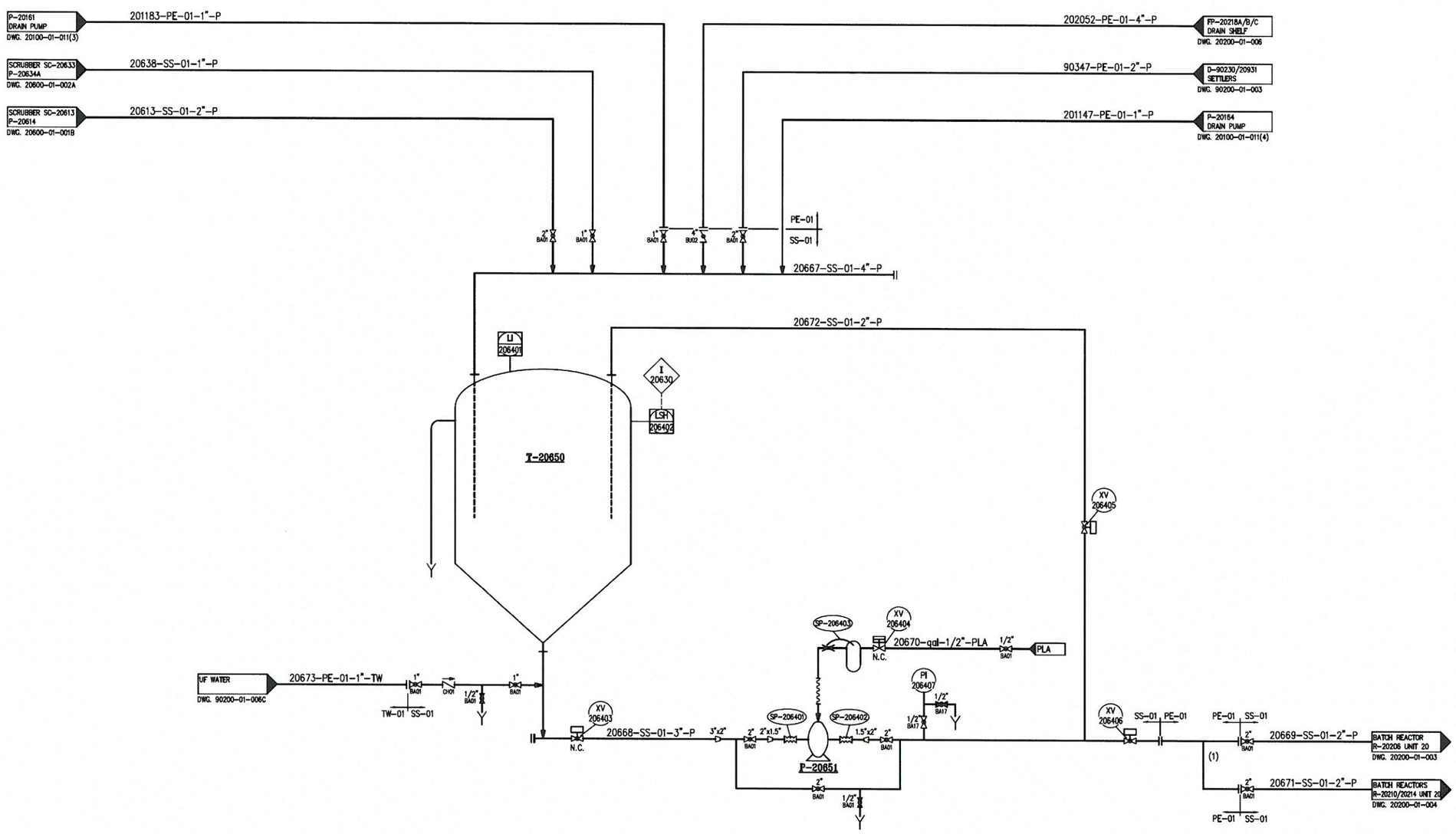


PRELIMINARY

NOTES:

1. SPLIT OF LINE SHALL BE NEXT TO BATCH REACTORS.

| TAG No. | P-20651 | T-20650 |
|---|---|---|
| Service | SLUDGE TRANSFER PUMP | SLUDGE TANK |
| Fluid | SLUDGE | SLUDGE |
| Size | 1.5" ctr dsph. | 5 m3 |
| Mat. of const. | SS | CS |
| Remarks | | |

| no. | description | date | by | app. |
|---|---|---|---|---|
| P1 | INTERLOCKS UPDATE | 03.08.16 | Danuta | N.R. |
| P0 | PRELIMINARY | 15.11.15 | Danuta | N.R. |

REVISIONS

| | by: | date: |
|---|---|---|
| design.: | K.F. | 15.11.15 |
| drawn.: | Danuta | 15.11.15 |
| check.: | N.R. | 15.11.15 |
| appr.: | | |

title: ELCON-USA

title: UNIT 20 SLUDGE FROM SCRUBBERS P & I DIAGRAM

elcon engineering

proj. no: –

dwg. no: USA-20600-01-004

comp. dwg. no: USA-20600-01-004

issue: P1

D:\:Y 9D\:Y\PI&D\PRELIMINARY\LAST VERSIONS (ALL UNITS)\UNIT 20\USA-20600-01-004_P1.dwg, 03/08/2016 11:06:39

I 20601 ON PSL-206193, STOP BURNER

I 20602 ON AI-206121, STOP BURNER

I 20603 ON AI-206122, STOP BURNER

I 20604 ON HIGH HIGH TI-206151, STOP BURNER
ON LOW TI-206151, CLOSE XV-206182 AND STOP PC BROME FEED

I 20605 ON HIGH HIGH TI-206124, STOP BURNER

I 20606 ON HIGH PI-206119, STOP FEED TO ROTARY DRYER AND STOP BURNER

I 20607 ON LSH-206183, STOP FEED TO ROTARY DRYER

I 20608 ON ZS-206184 ON, STOP BURNER

I 20609 ON HIGH TI-206126 OR HIGH TI-206138 OR HIGH TI-206140, STOP FEED TO ROTARY DRYER AND STOP BURNER

I 20610 ON HIGH TI-206126 OR HIGH TI-206138 OR HIGH TI-206140, STOP FEED TO ROTARY DRYER AND STOP BURNER
AND CLOSE XV-206131

I 20611 ON HIGH LI-206128 , STOP FEED TO ROTARY DRYER AND STOP BURNER

I 20612 ON HIGH DP-206148 AND 206140, STOP FEED TO ROTARY DRYER AND STOP BURNER

I 20613 ON HIGH PI-206141, STOP FEED TO ROTARY DRYER AND STOP BURNER

I 20614 ON LOW FI-206139, STOP FEED TO ROTARY DRYER AND STOP BURNER

I 20615 ON LOW FI-206137, STOP FEED TO ROTARY DRYER AND STOP BURNER

I 20616 ON AI-206160 OR AI-206144 HIGH, CLOSE XV-206154 AND OPEN XV-206155

I 20617 ON LSH-206181 AND P-20620, OPERATING FOR 60 sec., STOP ROTARY DRYER FEED AND BURNER

I 20618 IF ZS-206220 ON, STOP FEED TO ROTARY DRYER AND STOP BURNER AND STOP O-20621

I 20619 ON HIGH PI-206206, STOP FEED TO ROTARY DRYER, STOP BURNER AND O-20621

I 20620 ON LOW FI-206238, STOP FEED TO ROTARY DRYER, STOP BURNER AND O-20621

I 20621 ON LSH-206231, STOP FEED TO ROTARY DRYER, STOP BURNER AND O-20621
AND CLOSE XV-206233

I 20622 ON LOW LI-206128, CLOSE P-20615

I 20623 ON LOW LI-206232, CLOSE P-20635

I 20624 ON HIGH TI-206246, HIGH TI-206239, HIGH TI-206230, CLOSE FEED TO ROTARY DRYER,
STOP BURNER AND O-20621

I 20625 ON HIGH TI-206229, CLOSE FEED TO ROTARY DRYER, STOP BURNER AND O-20621

I 20630 ON LSH-206402 STOP BLEED FROM SCRUBBERS AND ALL FEEDS TO T-20650

PRELIMINARY

| no. מס | description תיאור | date תאריך | by מ | app. אש |
|---|---|---|---|---|
| P0 | PRELIMINARY | 03.08.16 | Danuta | N.R. |

REVISIONS מהדורות

| | by: מ | date: תאריך |
|---|---|---|
| design.: תכנון | K.F. | 03.08.16 |
| drawn: מצייר | Danuta | 03.08.16 |
| check.: בודק | N.R. | 03.08.16 |
| appr.: מאשר | | |

elcon engineering contractors

title: שם הפרויקט ELCON-USA

title: שם המסמך UNIT 20
AREA 600
INTERLOCKS LIST

proj. no מספר פרויקט: -

dwg. no: מס. מסמך: USA-20600-01-010

comp. dwg. no: מס. מסמך משנה: USA-20600-01-010

issue: הוצאה P0

מ:\Y מ:\Y\PI&D\PRELIMINARY\LAST VERSIONS (ALL UNITS)\UNIT 20\USA-20600-01-010_P0.dwg, 04/08/2016 14:33:43

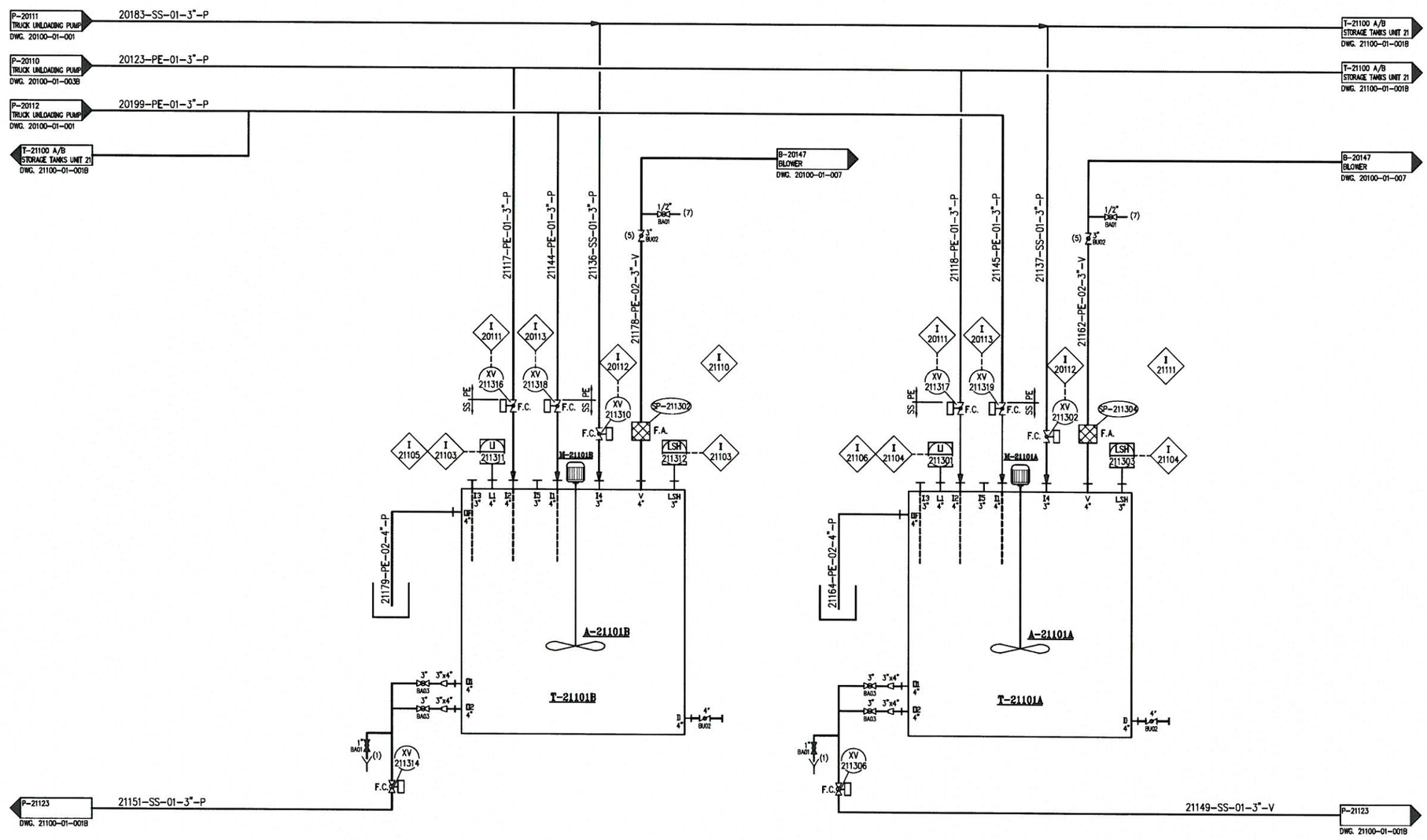


NOTES:

1. SAMPLE/DRAIN, POSSIBILITY TO TREATMENT IN BATCH REACTORS R-20206 / R-20210 / R-20214
2. DELETED.
3. DELETED.
4. CONNECT WITH FLOW DIRECTION.
5. LOCKED OPEN.
6. DELETED.
7. FUTURE CONNECTION TO PI IF NEEDED.

PRELIMINARY

| TAG No. | T-21101 A/B | A-21101 A/B |
|---|---|---|
| Service | STORAGE TANKS | AGITATOR |
| Fluid | WASTE WATER | WASTE WATER |
| Size | 500 m3 | 12 kW |
| Mat. of const. | CS EPOXY COATED | SS |
| Remarks | | EX. PROOF MOTOR |

| no. | description | date | by | op. |
|---|---|---|---|---|
| P2 | INTERLOCKS UPDATE | 18.05.16 | Danuta | N.R. |
| P1 | FOR APPROVAL | 14.04.16 | Danuta | N.R. |
| P0 | PRELIMINARY | 15.11.15 | Danuta | N.R. |

REVISIONS

| | by: | date: |
|---|---|---|
| design.: | K.F. | 15.11.15 |
| drawn.: | Danuta | 15.11.15 |
| check.: | N.R. | 15.11.15 |
| appr.: | | |

title: ELCON-USA

title: UNIT 21 STORAGE TANKS P & I DIAGRAM

proj. no: –

dwg. no: USA-21100-01-001A

comp. dwg. no: USA-21100-01-001A

issue: P2

elcon

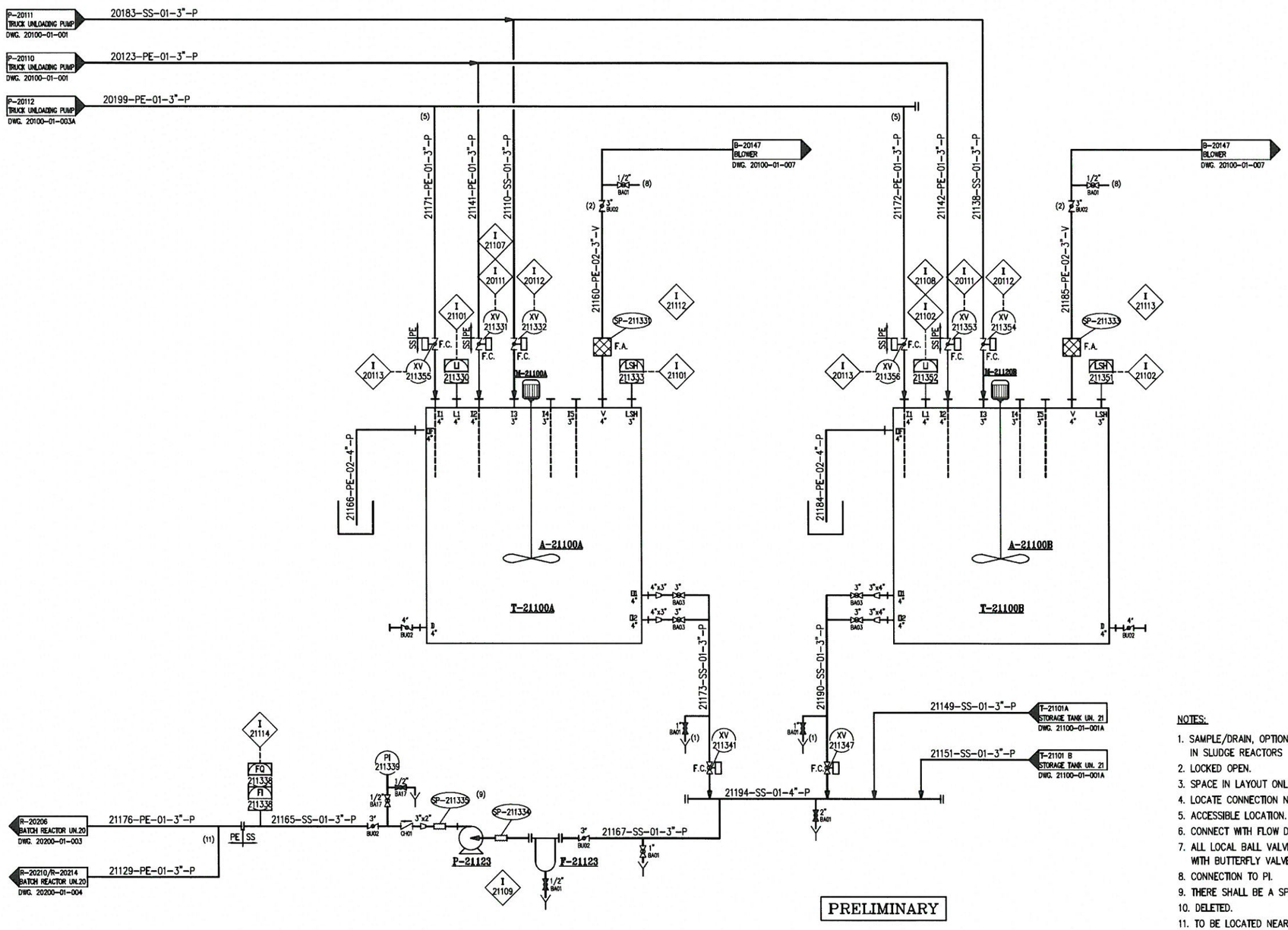


PRELIMINARY

NOTES:

1. SAMPLE/DRAIN, OPTION TO SENT FOR TREATMENT IN SLUDGE REACTORS
2. LOCKED OPEN.
3. SPACE IN LAYOUT ONLY.
4. LOCATE CONNECTION NEAR PROCESS CONTAINMENT.
5. ACCESSIBLE LOCATION.
6. CONNECT WITH FLOW DIRECTION.
7. ALL LOCAL BALL VALVES 3" WERE REPLACED WITH BUTTERFLY VALVES.
8. CONNECTION TO PI.
9. THERE SHALL BE A SPARE PUMP IN WAREHOUSE.
10. DELETED.
11. TO BE LOCATED NEAR BATCH REACTORS.
12. HOLD-DO NOT DESIGN.

| TAG No. | F-21123 | P-21123 | T-21120 A/B | A-21120 A/B |
|---|---|---|---|---|
| Service | SUCTION FILTER | TRANSFER PUMP | STORAGE TANK | AGITATOR |
| Fluid | WASTE WATER | WASTE WATER | WASTE WATER | WASTE WATER |
| Size | COARSE 3" | 50 m3/h, 50 mLc | 500 m3 | 12 kW |
| Mat. of const. | SS | SS | CS EPOXY COATED | SS |
| Remarks | | EX. PROOF MOTOR | | EX. PROOF MOTOR |

| no. | description | date | by | app. |
|---|---|---|---|---|
| P2 | INTERLOCKS UPDATE | 18.05.16 | Danuta | N.R. |
| P1 | FOR APPROVAL | 14.04.16 | Danuta | N.R. |
| P0 | PRELIMINARY | 15.11.15 | Danuta | N.R. |

REVISIONS

| | by | date |
|---|---|---|
| design.: | K.F. | 15.11.15 |
| drawn.: | Danuta | 15.11.15 |
| check.: | N.R. | 15.11.15 |
| appr.: | | |

title: ELCON-USA

title: UNIT 21 STORAGE TANKS P & I DIAGRAM

proj. no: –

dwg. no: USA-21100-01-001B

issue: P2

comp. dwg. no: USA-21100-01-001B

J:\Y DJ\Y\PI&D\PRELIMINARY\UNIT 21\USA-21100-01-001B_P2.dwg, 31/05/2016 10:18:49

I 21101 IF LI-211330 IS HIGH HIGH OR LSH-211333 IS ON, CLOSE XV-211305, XV-211331, XV-211332 AND COMPATIBLE PUMP

I 21102 IF LI-211352 IS HIGH HIGH OR LSH-211351 IS ON, CLOSE XV-211353, XV-211354, XV-211356 AND COMPATIBLE PUMP

I 21103 IF LI-211311 IS HIGH HIGH OR LSH-211312 IS ON, CLOSE XV-211310, XV-211316, XV-211318 AND COMPATIBLE PUMP

I 21104 IF LI-211301 IS HIGH HIGH OR LSH-211303 IS ON, CLOSE XV-211302, XV-211317, XV-211319 AND COMPATIBLE PUMP

I 21105 IF LI-211311 IS LOW LOW, CLOSE XV-211314

I 21106 IF LI-211301 IS LOW LOW, CLOSE XV-211306

I 21107 IF LI-211330 IS LOW LOW, CLOSE XV-211341

I 21108 IF LI-211352 IS LOW LOW, CLOSE XV-211347

I 21109 IF XV-211306, XV-211314, XV-211341 AND XV-211347 ARE CLOSE, CLOSE P-21123

I 21113 ÷ I 21110 ONLY ONE FILLING VALVE TO TANK CAN BE OPEN AT THE SAME TIME

I 21114 IF FI-211338 IS LOW LOW, CLOSE P-21123

I 20111 REFER TO DWG. 20100-01-020

I 20112 REFER TO DWG. 20100-01-020

I 20113 REFER TO DWG. 20100-01-020

PRELIMINARY

| no. | description | date | by | app. |
|---|---|---|---|---|
| P0 | PRELIMINARY | 18.05.16 | Danuta | N.R. |

REVISIONS

| | by: | date: |
|---|---|---|
| design.: | K.F. | 18.05.16 |
| drawn: | Danuta | 18.05.16 |
| check.: | N.R. | 18.05.16 |
| appr.: | | |

title: ELCON-USA

title: UNIT 21
AREA 100
INTERLOCKS LIST

elcon

proj. no: –

dwg. no: USA-21100-01-010

comp. dwg. no: USA-21100-01-010

issue: P0

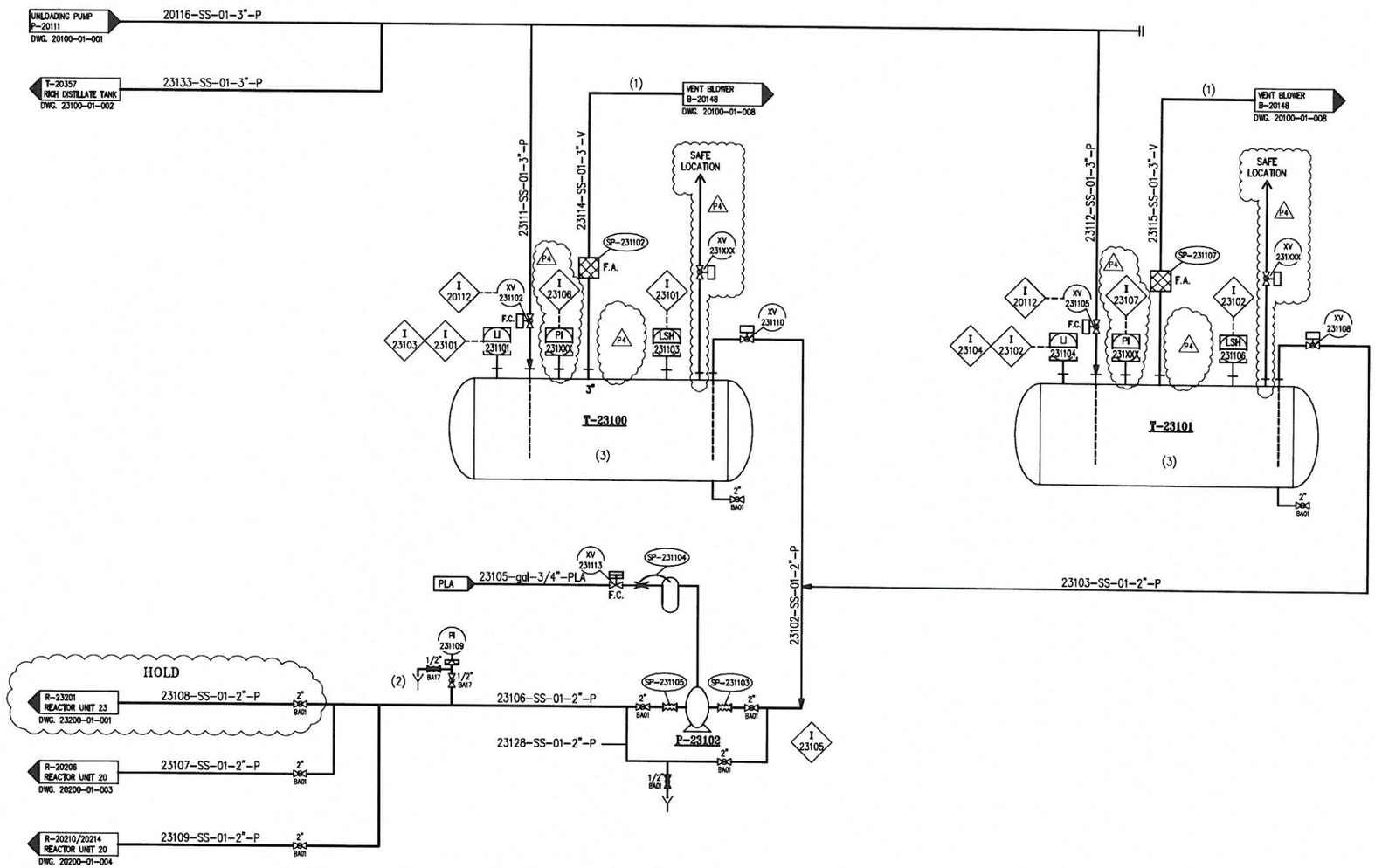


PRELIMINARY

NOTES:

1. CONNECT WITH FLOW DIRECTION.
2. NEAR REACTORS.
3. DESIGN VESSEL FOR 3 barg/FV.
4. DELETED.

| TAG No. | T-23100 | T-23101 |
|---|---|---|
| Service | STORAGE TANK | STORAGE TANK |
| Fluid | WASTE WATER W/10-50% ORGANIC | WASTE WATER W/10-50% ORGANIC |
| Size | 30-50 m3 | 50 m3 |
| Mat. of const. | CS/SS | CS/SS |
| Remarks | | |

| no. | description | date | by | app. |
|---|---|---|---|---|
| P4 | UPDATED AS NOTED | 15.02.17 | Danuta | N.R. |
| P3 | PSV ADDITION | 23.08.16 | Danuta | N.R. |
| P2 | INTERLOCKS UPDATE | 18.05.16 | Danuta | N.R. |
| P1 | FOR APPROVAL | 14.04.16 | Danuta | N.R. |
| P0 | PRELIMINARY | 15.11.15 | Danuta | N.R. |

REVISIONS

| | by: | date: |
|---|---|---|
| design.: | K.F. | 15.11.15 |
| drawn: | Danuta | 15.11.15 |
| check.: | N.R. | 15.11.15 |
| appr.: | | |

title: ELCON-USA

title: UNIT 23
STORAGE TANKS OF ORGANIC WASTE WATER
P & I DIAGRAM

elcon

proj. no: –
dwg. no: USA-23100-01-001
issue: P4
comp. dwg. no: USA-23100-01-001

:\D\:Y DG\:Y\PI&D\PRELIMINARY\LAST VERSIONS (ALL UNITS)\UNIT 23\USA-23100-01-001_P4.dwg, 16/02/2017 15:09:42

I 20112 REFER TO DWG. 20100-01-020

I 23101 IF LI-231101 IS HIGH HIGH OR LSH-231103 IS ON, CLOSE XV-231102

I 23102 IF LI-231104 IS HIGH HIGH OR LSH-231106 IS ON, CLOSE XV-231105

I 23103 IF LI-231101 IS LOW LOW, CLOSE XV-231110

I 23104 IF LI-231104 IS LOW LOW, CLOSE XV-231105

I 23105 IF XV-231110 AND XV-231105 ARE CLOSE, CLOSE P-23113

P1

I 23106 IF PI-231XXX HIGH, OPEN XV-231XXX

I 23107 IF PI-231XXX HIGH, OPEN XV-231XXX

PRELIMINARY

| no. מס | description תיאור | date תאר | by מ | app. אש |
|---|---|---|---|---|
| P1 | UPDATED AS NOTED | 15.02.17 | Danuta | N.R. |
| P0 | PRELIMINARY | 18.05.16 | Danuta | N.R. |

REVISIONS הערות

| | by: מ | date: תאר |
|---|---|---|
| design.: עצב | K.F. | 18.05.16 |
| drawn: שרטט | Danuta | 18.05.16 |
| check.: בדק | N.R. | 18.05.16 |
| appr.: אשר | | |

elcon engineering

title: שם הפרויקט ELCON-USA

title: שם הפרויקט UNIT 23
AREA 100
INTERLOCKS LIST

proj. no מספר פרויקט –

dwg. no: מספר שרטוט USA-23100-01-010

comp. dwg. no: מספר שרטוט מחשב USA-23100-01-010

issue: מהדורה P1

\:\מן \:Y\PI&D\PRELIMINARY\LAST VERSIONS (ALL UNITS)\UNIT 23\USA-23100-01-010_P1.dwg, 16/02/2017 13:42:30

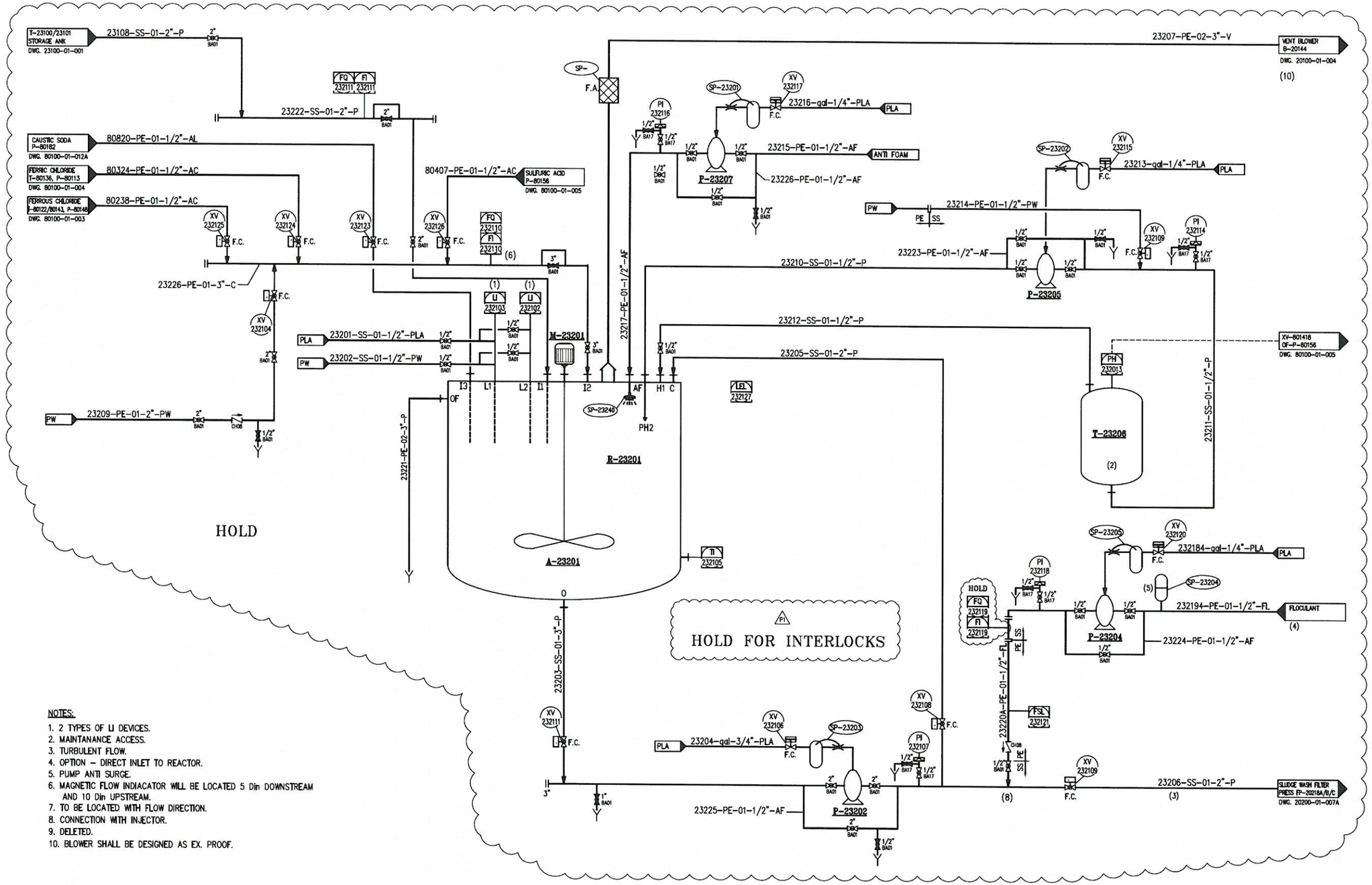


NOTES:

1. 2 TYPES OF LI DEVICES.
2. MAINTANANCE ACCESS.
3. TURBULENT FLOW.
4. OPTION – DIRECT INLET TO REACTOR.
5. PUMP ANTI SURGE.
6. MAGNETIC FLOW INDIACATOR WILL BE LOCATED 5 Din DOWNSTREAM AND 10 Din UPSTREAM.
7. TO BE LOCATED WITH FLOW DIRECTION.
8. CONNECTION WITH INJECTOR.
9. DELETED.
10. BLOWER SHALL BE DESIGNED AS EX. PROOF.

| TAG No. | A-23201 | M-23201 | P-23202 | P-23205 | P-23207 | P-23204 | R-23201 | T-23206 |
|---|---|---|---|---|---|---|---|---|
| Service | AGITATOR | MOTOR | TRANSFER PUMP | PH LOOP PUMP | ANTI FOAM PUMP | FLOCULANT PUMP | REACTOR | PH VESSEL |
| Fluid | ORGANIC WASTE WATER | | SLUDGE | SLUDGE | ANTI FOAM | FLOCULANT | WASTE WATER | SLUDGE |
| Size | | 10 HP | 2" air diaph. | 0.5" air diaph. | 0.5" air diaph. | 0.5" air diaph. | 10-20 m3 W/10-50% ORGANICS | H=0.5m, D=0.2m |
| Mat. of const. | SS | | SS | SS | SS | SS | SS | SS |
| Remarks | 7.5 hp | EX. PROOF | | | | | | |

PRELIMINARY

| no. | description | date | by | app. |
|---|---|---|---|---|
| P1 | UPDATED AS NOTED | 15.02.17 | Danuta | N.R. |
| P0 | PRELIMINARY | 15.11.15 | Danuta | N.R. |

REVISIONS

| | by: | date: |
|---|---|---|
| design.: | K.F. | 15.11.15 |
| drawn: | Danuta | 15.11.15 |
| check.: | N.R. | 15.11.15 |
| appr.: | | |

title: ELCON–USA

title: UNIT 23 REACTION P & I DIAGRAM

proj. no: –

dwg. no: USA-23200-01-001

comp. dwg. no: USA-23200-01-001

issue: P1

elcon

8 7 6 5 4 3 2 1

:\D\:Y מס\:Y\PI&D\PRELIMINARY\LAST VERSIONS (ALL UNITS)\UNIT 23\USA-23200-01-001_P1.dwg, 16/02/2017 15:14:15

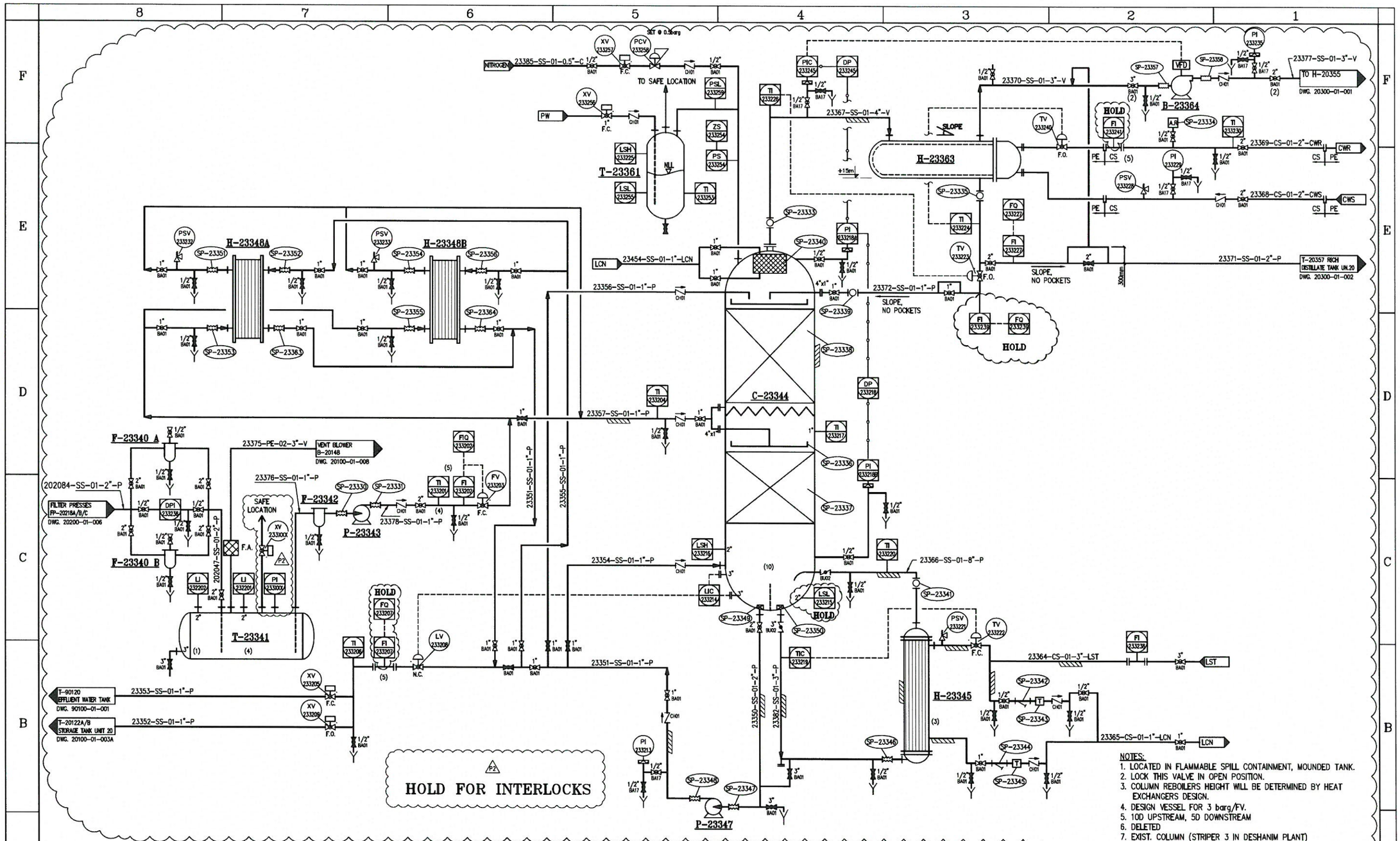


NOTES:
1. LOCATED IN FLAMMABLE SPILL CONTAINMENT, MOUNDED TANK.
2. LOCK THIS VALVE IN OPEN POSITION.
3. COLUMN REBOILERS HEIGHT WILL BE DETERMINED BY HEAT EXCHANGERS DESIGN.
4. DESIGN VESSEL FOR 3 barg/FV.
5. 10D UPSTREAM, 5D DOWNSTREAM
6. DELETED
7. EXIST. COLUMN (STRIPER 3 IN DESHANIM PLANT)
8. DELETED
9. DELETED
10. MANHOLE AT THE BOTTOM OF DISTILLATION COLUMN

| TAG No. | T-23341 | F-23342 | P-23343 | C-23344 (7) | H-23345 | P-23347 | H-23348A/B | H-23363 | B-23364 |
|---|---|---|---|---|---|---|---|---|---|
| Service | STORAGE TANK | PUMP FILTER | TRANSFER PUMP | DISTILLATION COLUMN | DISTILLATION COLUMN REBOILER | DISTILLATION COLUMN BOTTOM PUMP | COLUMN FEED HEAT EXCHANGER | DISTILLATION COLUMN CONDENSER | VENT BLOWER |
| Fluid | FILTRATED ORGANIC WASTE WATER 10-100% | FILTRATED ORGANIC WASTE WATER | FILTRATED ORGANIC WASTE WATER | LEAN/RICH DISTILLATE | LEAN WATER/STEAM | LEAN WATER | LEAN/RICH SOLVENT | ORGANIC VAPORS/ COOLING WATER | VOC+AIR |
| Size | 35-50 $m^3$ | COARSE 3" | 4-6$m^3$/hr, 2 barg | 18"/10m/25 NTC | 500000 Kcal/h 15 m2 | 4-6$m^3$/hr, 50m | 150000 Kcal/h | 3000 Kcal/h 8.6 m2 | 50-100 Nm3/h 50 mbar |
| Mat. of const. | SS/CS | SS316 | SS316/Ti | SS316 | SS316 | SS304 | SS316 | SS304 | SS |
| Remarks | | | EX. PROOF. | | | EX. PROOF. | PLATES | | EX. PROOF |

| no. | description | date | by | app. |
|---|---|---|---|---|
| P2 | UPDATED AS NOTED | 15.02.17 | Danuta | N.R. |
| P1 | PSV ADDITION | 23.08.16 | Danuta | N.R. |
| P0 | PRELIMINARY | 14.04.16 | Danuta | N.R. |

REVISIONS

| | by: | date: |
|---|---|---|
| design.: | K.F. | 14.04.16 |
| drawn.: | Danuta | 14.04.16 |
| check.: | N.R. | 14.04.16 |
| appr.: | | |

title: ELCON-USA

title: UNIT 23 DISTILLATION COLUMN P & I DIAGRAM

proj. no: –

dwg. no: USA-23300-01-002

comp. dwg. no: USA-23300-01-002

issue: P2

:\D\:Y\PI&D\PRELIMINARY\LAST VERSIONS (ALL UNITS)\UNIT 23\USA-23300-01-002_P2.dwg, 16/02/2017 15:11:14

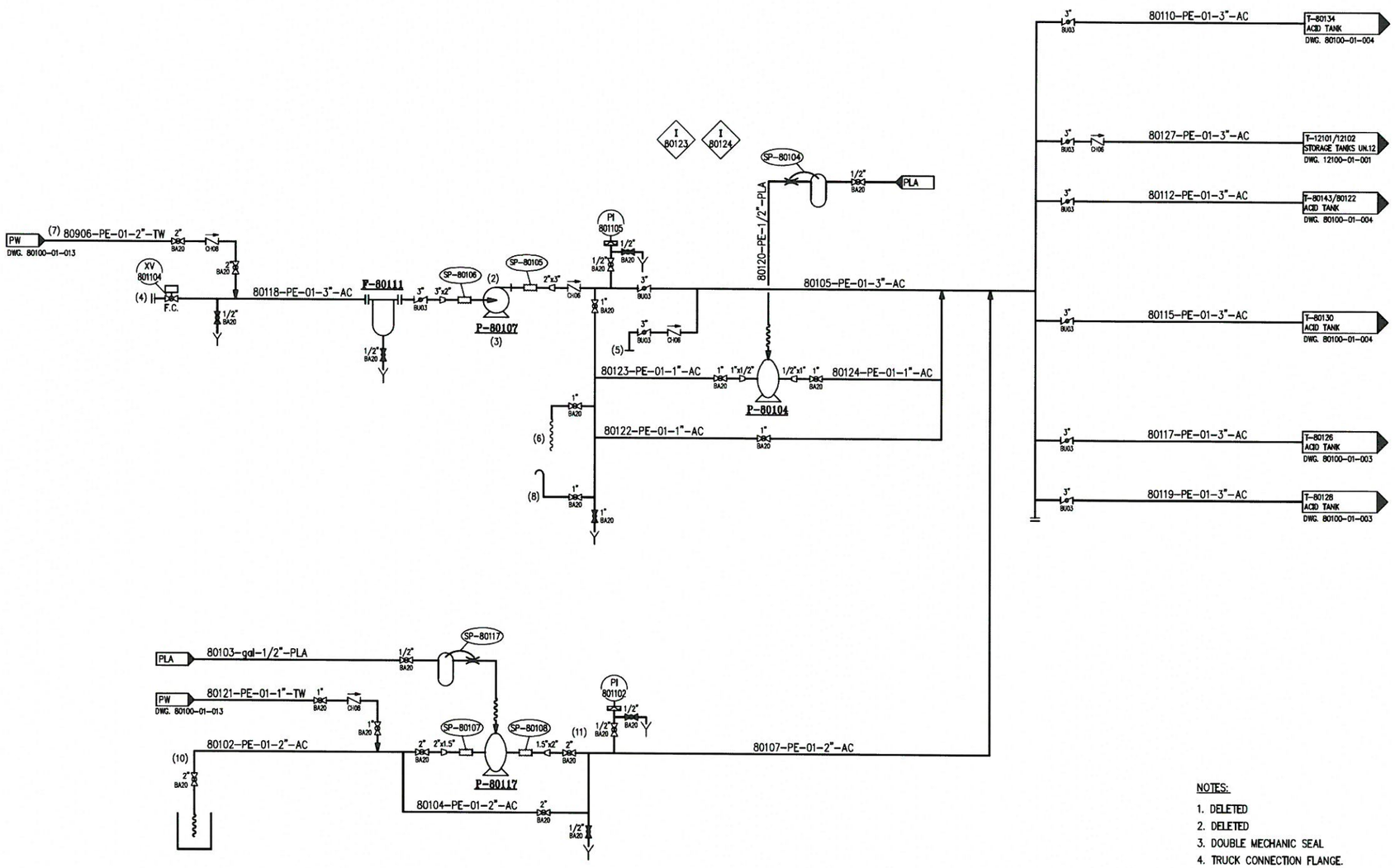


PRELIMINARY

NOTES:

1. DELETED
2. DELETED
3. DOUBLE MECHANIC SEAL
4. TRUCK CONNECTION FLANGE.
5. CONNECTION FOR UNLOADING WITH TRUCK PUMP.
6. CONNECTION FOR DRAINAGE SUMP
7. PUMP WASHING CONNECTION IN PID 20100-01-013
8. SAMPLE POINT
9. DELETED.
10. UNLOADING FROM CUBES.
11. CUBES UNLOADING SHALL BE IN TANKS UNLOADING ZONE.

| TAG No. | P-80104 | P-80107 | F-80111 | P-80117 |
|---|---|---|---|---|
| Service | LINE DISCHARGE PUMP | UNLOADING PUMP | SUCTION FILTER | TRANSFER PUMP |
| Fluid | ACIDS | ACIDS | ACIDS | ACID |
| Size | 1/2" AIR DIAPH. | 40 m3/h, 30 mLc | CAORSE 3" | 1.5" AIR DIAPH. |
| Mat. of const. | PVDF/PP | PVDF/PP | PE/PP | PVDF/TEFLON |
| Remarks | | | | |

| no. | description | date | by | app. |
|---|---|---|---|---|
| P1 | INTERLOCKS UPDATE | 18.05.16 | Danuta | N.R. |
| P0 | PRELIMINARY | 15.11.15 | Danuta | N.R. |

REVISIONS

| | by | date |
|---|---|---|
| design.: | K.F. | 15.11.15 |
| drawn: | Danuta | 15.11.15 |
| check.: | N.R. | 15.11.15 |
| appr.: | | |

title: ELCON-USA

title: UNIT 80 ACID UNLOADING PUMPS P & I DIAGRAM

proj. no: — | dwg. no: USA-80100-01-001 | issue: P1

comp. dwg. no: USA-80100-01-001

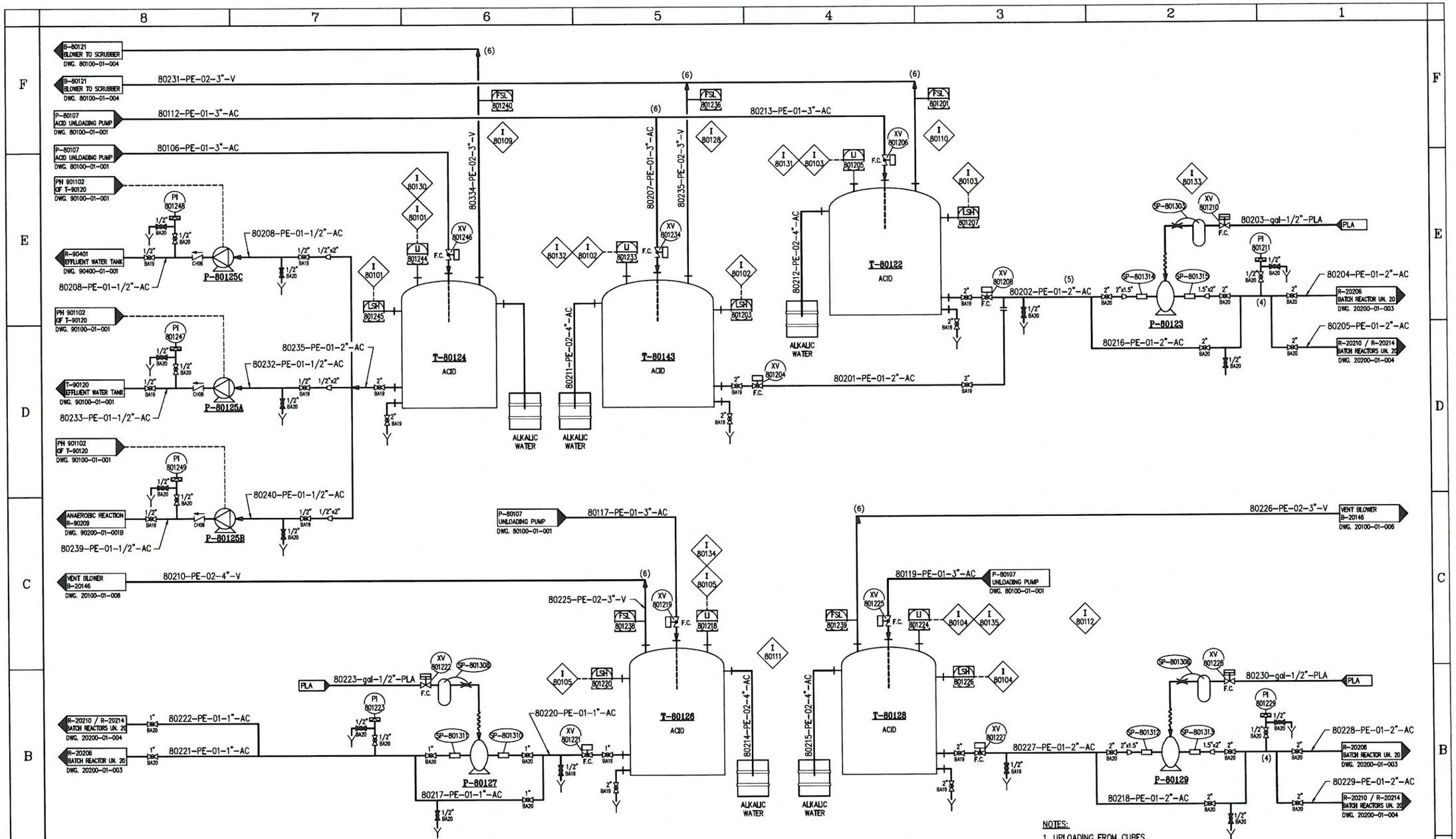


NOTES:
1. UPLOADING FROM CUBES.
2. DRAIN / SAMPLE
3. DIFFERENT
4. THE SPLIT IS NEXT TO THE REACTORS.
5. DELETED.
6. CONNECT WITH FLOW DIRECTION.

| TAG No. | T-80122 | P-80123 | T-80124 | P-80125A | P-80125B | P-80125C | T-80126 | P-80127 | T-80128 | P-80129 | T-80143 |
|---|---|---|---|---|---|---|---|---|---|---|---|
| Service | TANK | TRANSFER PUMP | ACID TANK | METERING PUMP | HCl PUMP | HCl PUMP | TANK | TRANSFER PUMP | TANK | TRANSFER PUMP | TANK |
| Fluid | ACID | ACID | ACID | ACID | ACID | ACID | ACID | ACID | ACID | ACID | ACID |
| Size | 100 m3 | 1 1/2" AIR DIAPH. | 50 m3 | 10 l/h, 2-2.5 bar | 25 l/h, 3 bar | 10 l/h, 2.5-3 bar | 50 m3 | 1" AIR DIAPH. | 50 m3 | 1 1/2" AIR DIAPH. | 100 m3 |
| Mat. of const. | PE | PP/TEFLON | PE | PP/TEFLON | PP | PVDF/TEFLON | PE | PP/TEFLON | PE/PP/FRP | PP/TEFLON | FRP/PE |
| Remarks | | | | | | | | | | | |

| no. | description | date | by | app. |
|---|---|---|---|---|
| P2 | INTERLOCKS UPDATE | 18.05.16 | Danuta | N.R. |
| P1 | FOR APPROVAL | 14.04.16 | Danuta | N.R. |
| P0 | PRELIMINARY | 15.11.15 | Danuta | N.R. |

REVISIONS

| | | |
|---|---|---|
| N.R. | by: | date: |
| design.: | K.F. | 15.11.15 |
| drawn: | Danuta | 15.11.15 |
| check.: | N.R. | 15.11.15 |
| appr.: | | |

title: ELCON-USA

title: UNIT 80 ACID TANK FARM P & I DIAGRAM

proj. no: –
dwg. no: USA-80100-01-003
issue: P2
comp. dwg. no: USA-80100-01-003

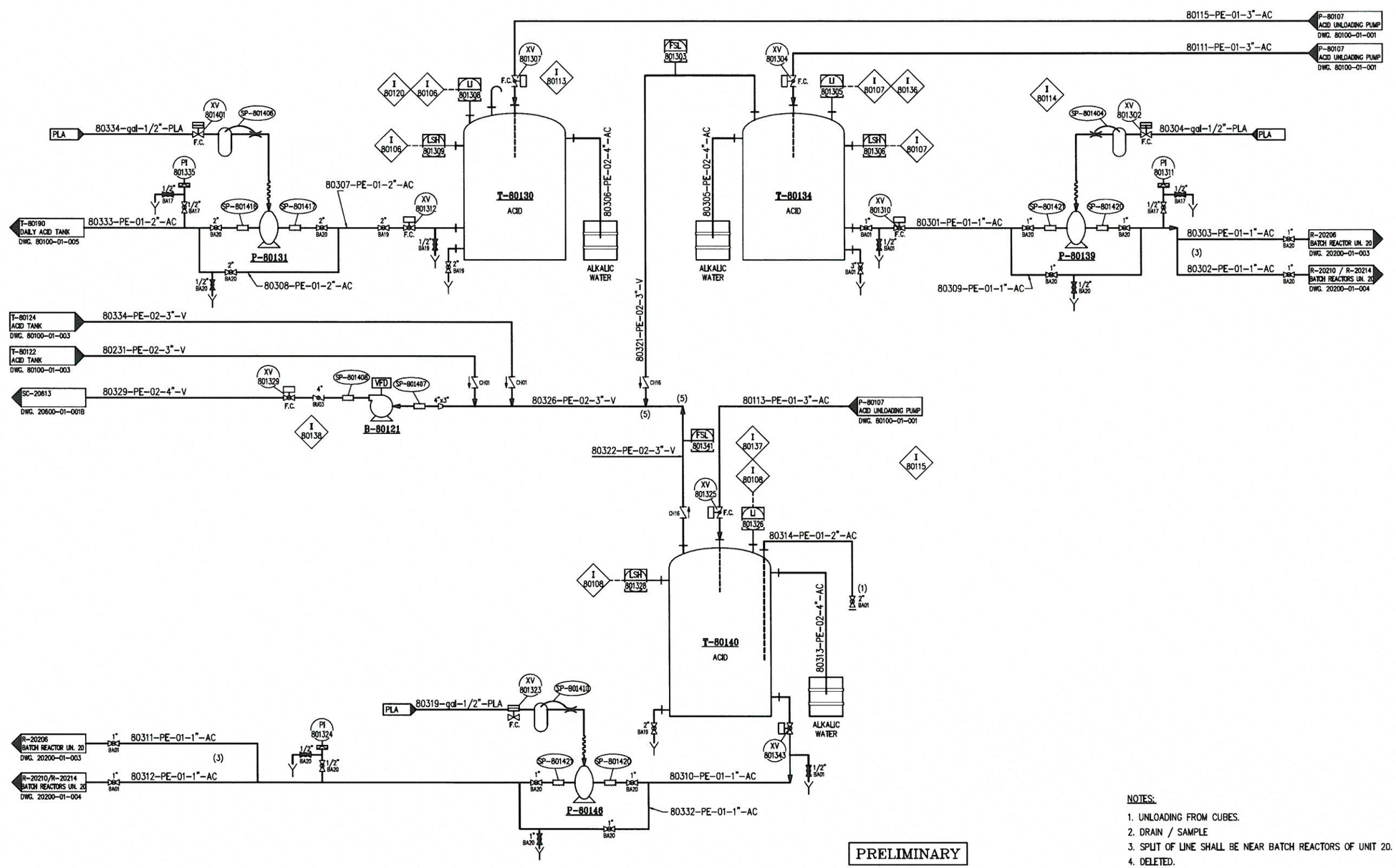


PRELIMINARY

NOTES:

1. UNLOADING FROM CUBES.
2. DRAIN / SAMPLE
3. SPLIT OF LINE SHALL BE NEAR BATCH REACTORS OF UNIT 20.
4. DELETED.
5. CONNECT WITH FLOW DIRECTION.
6. FUTURE CONNECTION TO UN-CONT. REACTORS OF UNIT 20.

| TAG No. | B-80121 | T-80130 | P-80131 | T-80134 | P-80139 | T-80140 | P-80146 |
|---|---|---|---|---|---|---|---|
| Service | VENT BLOWER | ACID TANK | TRANSFER PUMP | ACID TANK | TRANSFER PUMP | ACID TANK | TRANSFER PUMP |
| Fluid | ACID | ACID | ACID | ACID | ACID | ACID | ACID |
| Size | 200 Nm3/h | 30 m3 | 2" AIR DIAPH. | 28 m3 | 1" AIR DIAPH. | 30 m3 | 1" AIR DIAPH. |
| Mat. of const. | SS | PE | PVDF/TEFLON | PP | PP | PE/PP | PP/TEFLON |
| Remarks | | | | | | | |

| no. מס | description | date תאר | by מ | app. אש |
|---|---|---|---|---|
| P1 | INTERLOCKS UPDATE | 18.05.16 | Danuta | N.R. |
| P1 | FOR APPROVAL | 14.04.16 | Danuta | N.R. |
| P0 | PRELIMINARY | 15.11.15 | Danuta | N.R. |

REVISIONS מהדורות

| | by: מ | date: תאריך |
|---|---|---|
| design.: תכנן | K.F. | 15.11.15 |
| drawn: נשרטט | Danuta | 15.11.15 |
| check.: בדק | N.R. | 15.11.15 |
| appr.: מאשר | | |

elcon engineering & plants

title: ELCON-USA שם המפעל

title: UNIT 80 ACID TANK FARM P & I DIAGRAM שם הנושא

proj no מספר: –

dwg. no: מספר נוסף: USA-80100-01-004

comp. dwg. no: USA-80100-01-004 מספר נוסף

issue: P2 הוצאה

D:\Y DJ\:Y\PI&D\PRELIMINARY\UNIT 80\ALL REV\USA-80100-01-004_P2.dwg, 30/05/2016 12:15:11

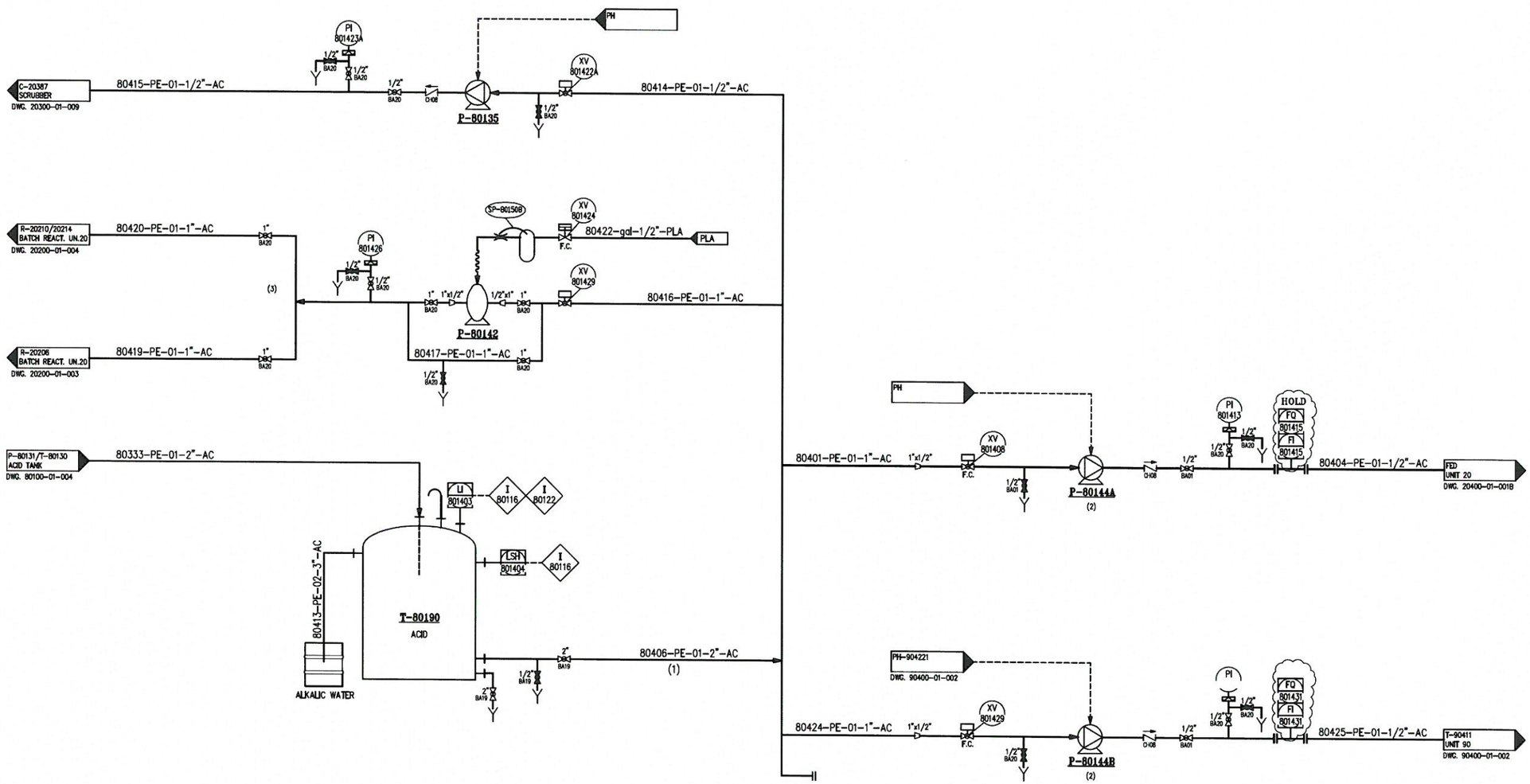


PRELIMINARY

NOTES:
1. LINE OF PE IN SS SLEEVE.
2. METERING PUMP TO BE PURCHASED WITH FILTER.
3. SPLIT OF LINE SHALL BE NEAR BATCH REACTORS OF UNIT 20.

| TAG No. | P-80135 | P-80142 | P-80144A | P-80144B | T-80190 |
|---|---|---|---|---|---|
| Service | TRANSFER PUMPS | TRANSFER PUMP | TRANSFER PUMP | TRANSFER PUMP | ITERMEDIATE TANK |
| Fluid | ACID | ACID | ACID | ACID | ACID |
| Size | 2.5 l/h; 2.5-3 bar | 0.5" dir diaph | 20 l/h; 2.5-3 bar | 20 l/h; 2.5-3 bar | 2 m3 |
| Mat. of const. | PVDF/TEFLON | PVDF/TEFLON | PVDF/TEFLON | PVDF/TEFLON | PE |
| Remarks | | | | | |

| no. | description | date | by | app. |
|---|---|---|---|---|
| P1 | INTERLOCKS UPDATE | 18.05.16 | Danuta | N.R. |
| P0 | PRELIMINARY | 15.11.15 | Danuta | N.R. |

REVISIONS

| | by: | date: |
|---|---|---|
| design.: | K.F. | 15.11.15 |
| drawn: | Danuta | 15.11.15 |
| check.: | N.R. | 15.11.15 |
| appr.: | | |

title: ELCON-USA

title: UNIT 80 SULFURIC ACID TANK P & I DIAGRAM

elcon

proj. no: –

dwg. no: USA-80100-01-005

comp. dwg. no: USA-80100-01-005

issue: P1

\\:Y 5\\:Y\PI&D\PRELIMINARY\UNIT 80\ALL REV\USA-80100-01-005_P1.dwg, 30/05/2016 12:16:45

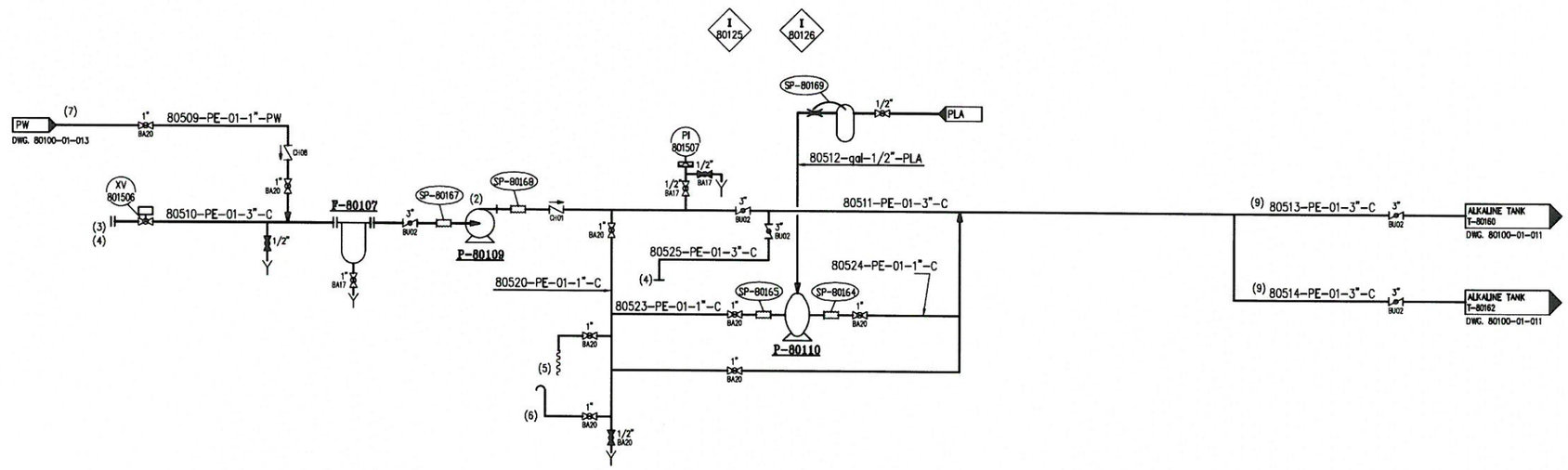


NOTES:

1. PUMP UNLOADING STATION #1
   FRESH CAUSTIC – T-80160
   USED CAUSTIC – T-80162 } DWG. 80100-01-011
2. DOUBLE MECHANICAL SEAL
3. TRUCK CONNECTION FLANGE.
4. CONNECTION FOR UNLOADING WITH TRUCK'S PUMP
5. CONNECTION FOR DRAINAGE SUMP.
6. SAMPLE POINT
7. PUMP WASHING CONNECTION IN PID 20100-01-013
8. AN OPTION FOR UNLOADING WITH TANKERS PUMP.
9. LOCATION NEAR STORAGE TANKS.

PRELIMINARY

| TAG No. | F-80107 | P-80109 | P-80110 |
|---|---|---|---|
| Service | SUCTION FILTER | UNLOADING PUMP | LINE DISCHARGE PUMP |
| Fluid | ALKALIC FLUID | ALKALIC FLUID | ALKALIC FLUID |
| Size | CAORSE 3" | 40 m3/h, 30 m | 1/2" AIR DIAPH. |
| Mat. of const. | CS | CS | PP |
| Remarks | | | |

| no. | description | date | by | app. |
|---|---|---|---|---|
| P1 | INTERLOCKS UPDATE | 18.05.16 | Danuta | N.R. |
| P0 | PRELIMINARY | 15.11.15 | Danuta | N.R. |

REVISIONS

| | by: | date: |
|---|---|---|
| design.: | K.F. | 15.11.15 |
| drawn: | Danuta | 15.11.15 |
| check.: | N.R. | 15.11.15 |
| appr.: | | |

title: ELCON-USA

title: UNIT 80 ALKALINE UNLOADING PUMP P & I DIAGRAM

elcon

proj. no: –

deg. no: USA-80100-01-009

comp. dwg. no: USA-80100-01-009

issue: P1

J:\Y 9J\:Y\PI&D\PRELIMINARY\UNIT 80\ALL REV\USA-80100-01-009_P1.dwg, 30/05/2016 12:18:47

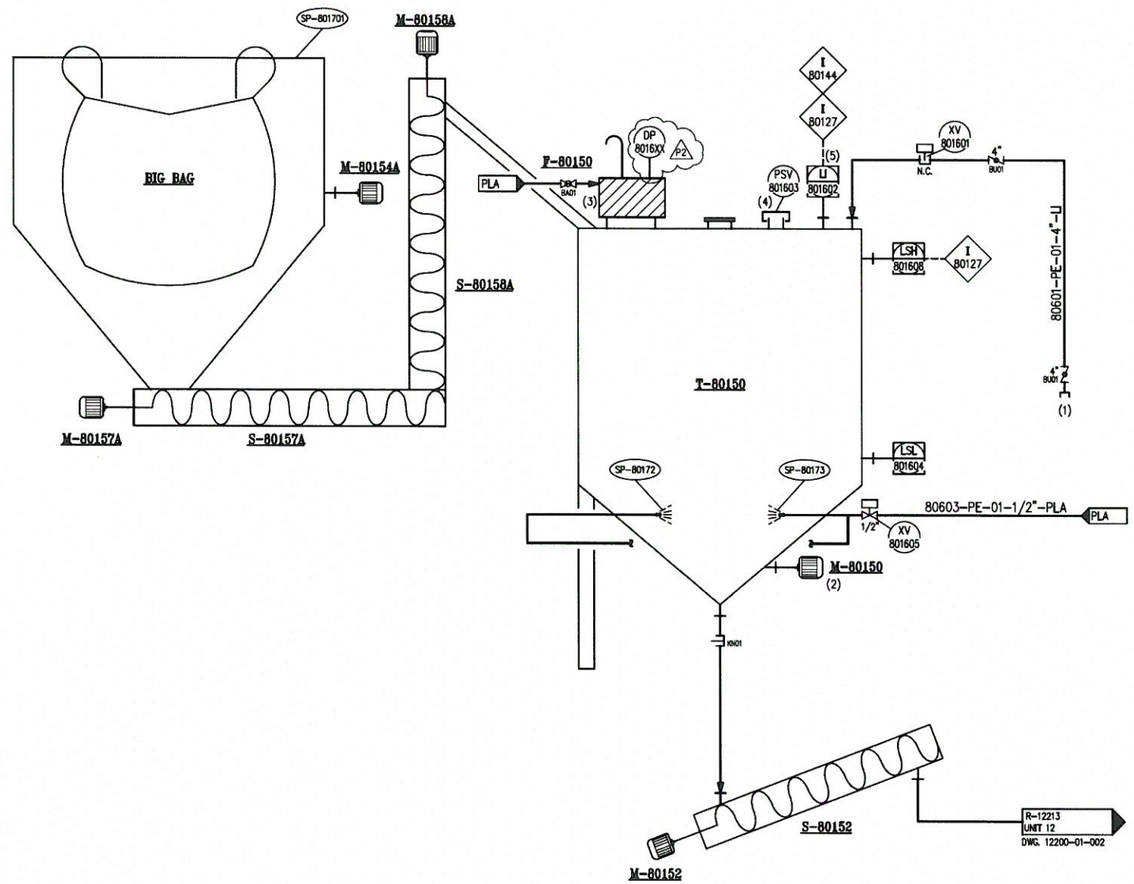


PRELIMINARY

NOTES:

1. CONNECTION TO TRANSFER TRUCK.
2. VIBRATION
3. LOCAL CONTROL PANEL.
4. SPRING LOADED PRESSURE RELIEF.
5. RADAR LEVEL TRANSMITER

| TAG No. | F-80150 | T-80150 | M-80150 | S-80152 | M-80152 | M-80154A | S-80157A | M-80157A | S-80158A | M-80158A |
|---|---|---|---|---|---|---|---|---|---|---|
| Service | BAG FILTER | LIME STORAGE | VIBRATION DEVICE MOTOR | LIME TRANSFER SCREW | LIME TRANSFER SCREW MOTOR | VIBRATION DEVICE MOTOR | LIME TRANSFER SCREW | LIME TRANSFER SCREW MOTOR | LIME TRANSFER SCREW | LIME TRANSFER SCREW MOTOR |
| Fluid | | LIME | | LIME | | | LIME | | LIME | |
| Size | | 70 m3 | 1 kW | | 7.5 kW | 0.55 kW | 3.5 ton/h | 0.75 kW | 3.5 ton/h | 5.5 kW |
| Mat. of const. | | C.S. | | SS | | | | | | |
| Remarks | BY VENDOR | EXIST. T-1220 | | | | | | | | |

| no. | description | date | by | app. |
|---|---|---|---|---|
| P2 | ADDITING OF F-80150 LOCAL DP | 06.07.16 | Danuta | N.R. |
| P1 | INTERLOCKS UPDATE | 18.05.16 | Danuta | N.R. |
| P0 | PRELIMINARY | 15.11.15 | Danuta | N.R. |

REVISIONS

| | by: | date: |
|---|---|---|
| design.: | K.F. | 15.11.15 |
| drawn.: | Danuta | 15.11.15 |
| check.: | N.R. | 15.11.15 |
| appr.: | | |

title: ELCON-USA

title: UNIT 80 LIME STORAGE P & I DIAGRAM

proj. no: –

deg. no: USA-80100-01-010A

comp. deg. no: USA-80100-01-010A

issue: P2

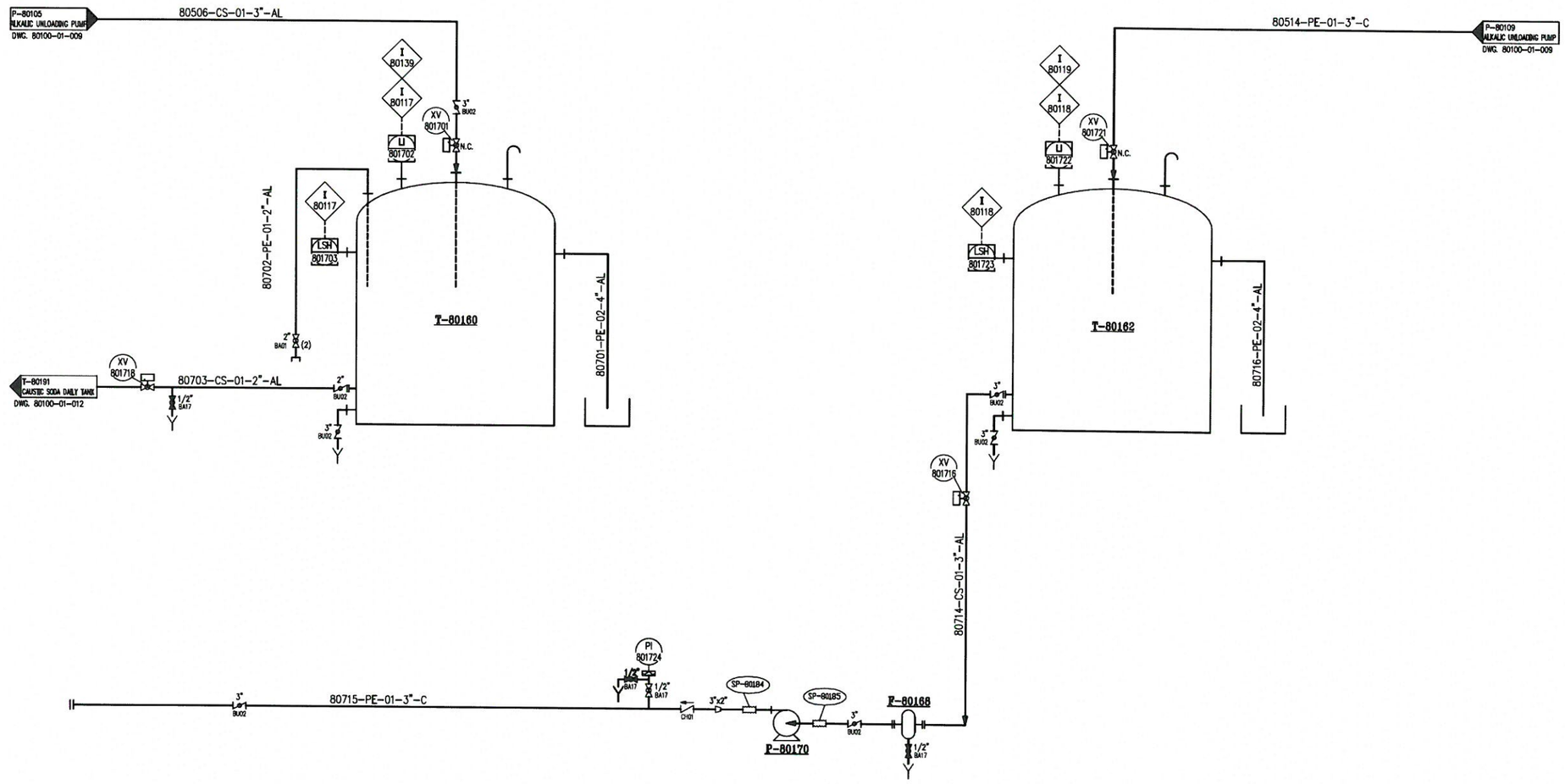


PRELIMINARY

NOTES:

1. DELETED.
2. UNLOADING FROM CUBES.
3. LOCATED IN TRUCK ROAD.
4. LOCATED AT UNLOADING ZONE.

| TAG No. | T-80160 | T-80162 | F-80168 | P-80170 |
|---|---|---|---|---|
| Service | ALKALIC TANK | ALKALIC TANK | SUCTION FILTER | TRANSFER PUMP |
| Fluid | ALKALIC | ALKALIC | DETERGENTS | DETERGENTS |
| Size | 50 m3 | 50 m3 | COARSE 3" | 40 m3/h, 30mLc |
| Mat. of const. | CS | CS | SS | CS |
| Remarks | | | | |

| no. מס | description תיאור | date תאר | by מי | מפ' שם |
|---|---|---|---|---|
| P1 | INTERLOCKS UPDATE | 18.05.16 | Danuta | N.R. |
| P0 | PRELIMINARY | 15.11.15 | Danuta | N.R. |

REVISIONS הערות

| | by: מי | date: תאר |
|---|---|---|
| design.: עצוב | K.F. | 15.11.15 |
| drawn: שרטט | Danuta | 15.11.15 |
| check.: בדק | N.R. | 15.11.15 |
| appr.: אשר | | |

title: שם הפרויקט ELCON-USA

title: שם הפרויקט UNIT 80
ALKALINE TANK FARM
P & I DIAGRAM

elcon

| proj. no מספר | dwg. no: מס' שרטוט | issue: |
|---|---|---|
| – | USA-80100-01-011 | P1 |

comp. dwg. no: USA-80100-01-011 מס' שרטוט מחשב

גרסה

D:\:Y DJ\:Y\PI&D\PRELIMINARY\UNIT 80\ALL REV\USA-80100-01-011_P1.dwg, 30/05/2016 13:55:54

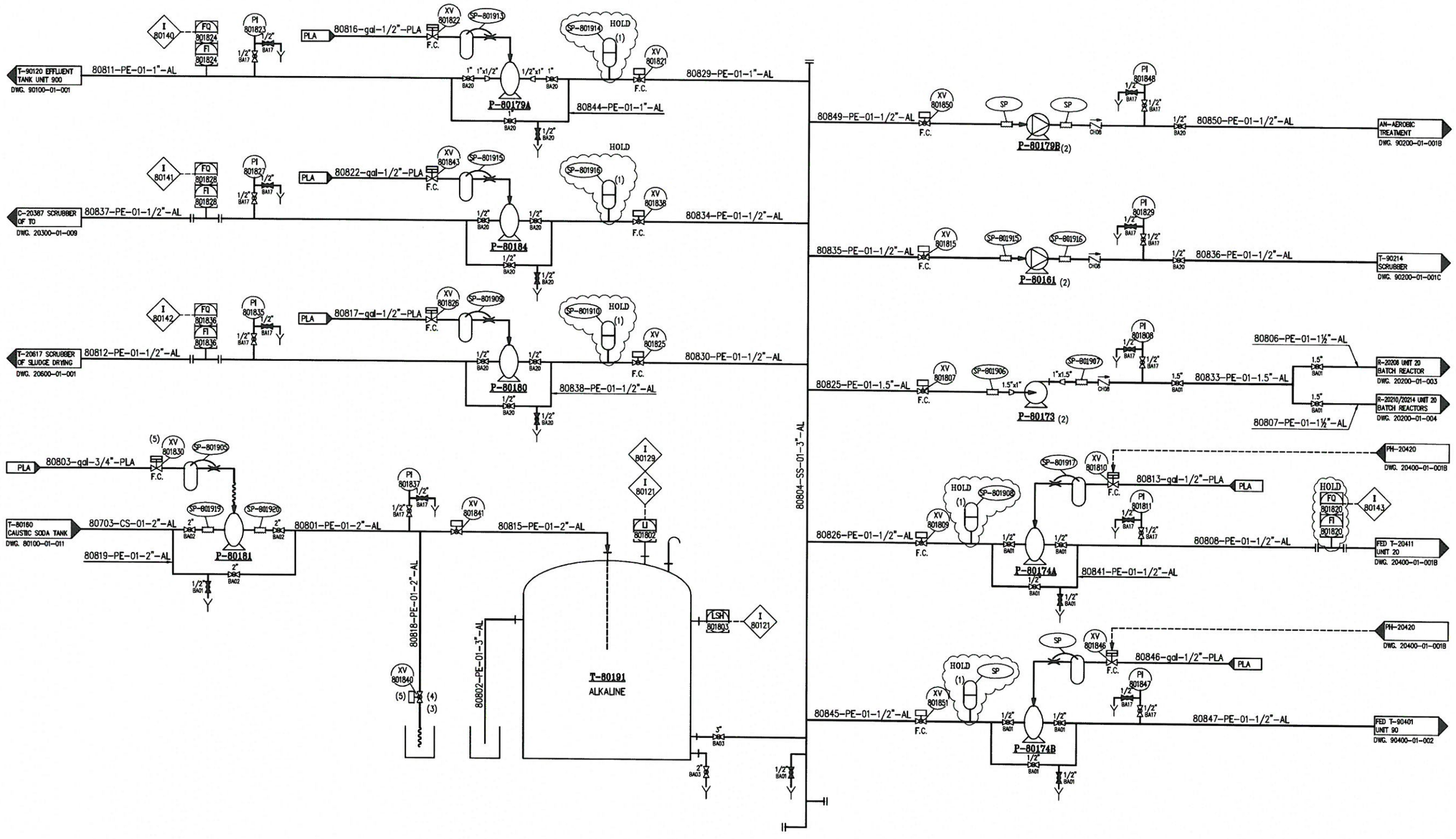


NOTES:

1. DAMPHER.
2. METERING PUMP TO BE PURCHACED WITH FILTER.
3. FILLING CUBES.
4. ACCESIBLE LOCATION.
5. WITH TOGLE FOR MAN. CUBE UNLOADING.

| TAG No. | P-80161 | P-80173 | P-80174A/B | P-80179A | P-80180 | P-80181 | P-80184 | T-80191 |
|---|---|---|---|---|---|---|---|---|
| Service | ALKALINE PUMP | ALKALINE PUMP | ALKALINE PUMP | ALKALINE PUMP | ALKALINE PUMP | ALKALINE PUMP | ALKALINE PUMP | ALKALINE DAILY TANK |
| Fluid | ALKALINE | ALKALINE | ALKALINE | ALKALINE | ALKALINE | ALKALINE | ALKALINE | ALKALINE |
| Size | 300 l/h, 2 bar | 5 m3/h,20mLc(3bar) | 0.5" AIR DIAPH. | 0.5" AIR DIAPH. | 0.5" AIR DIAPH. | 2" AIR DIAPH. | 0.5" AIR DIAPH. | 2 m3 |
| Mat. of const. | CS | CS | PP | PP | PP | PP | PP | PE |
| Remarks | | | | | | | | |

| no. | description | date | by | appr. |
|---|---|---|---|---|
| P1 | INTERLOCKS UPDATE | 18.05.16 | Danuta | N.R. |
| P0 | PRELIMINARY | 15.11.15 | Danuta | N.R. |

REVISIONS

| | by: | date: |
|---|---|---|
| design.: | K.F. | 15.11.15 |
| drawn: | Danuta | 15.11.15 |
| check.: | N.R. | 15.11.15 |
| appr.: | | |

title: ELCON-USA

title: UNIT 80 ALKALINE DAILY TANK AND PUMPS P & I DIAGRAM

proj. no: –

dwg. no: USA-80100-01-012

issue: P1

comp. dwg. no: USA-80100-01-012

J:\:Y DJ\:Y\PI&D\PRELIMINARY\UNIT 80\ALL REV\USA-80100-01-012_P1.dwg, 30/05/2016 14:04:12

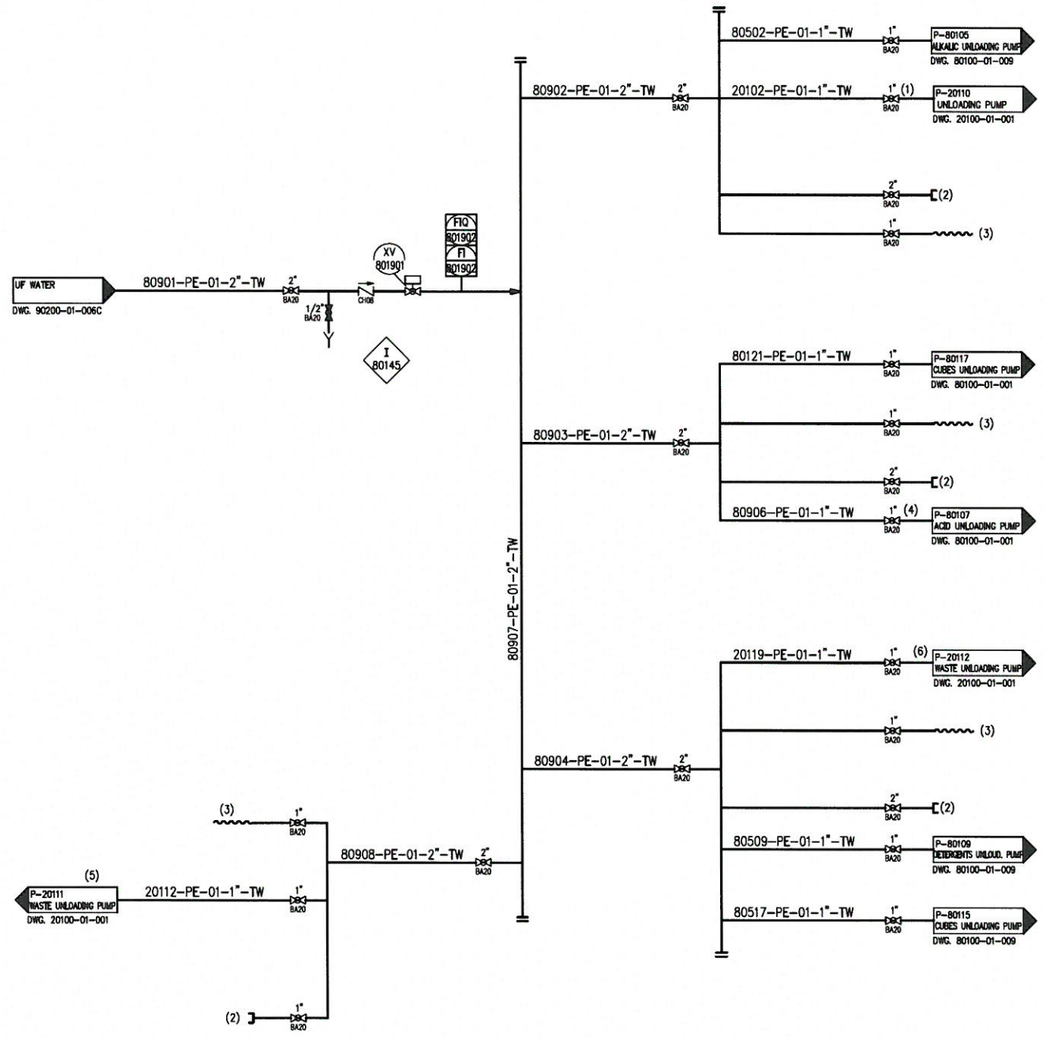


PRELIMINARY

NOTES:

1. POSITIONED NEAR WASTE UNLODING STATION #1.
2. FIRE DISTINGUISHING.
3. FAST CONNECTION FOR FIRE DISTINGUISHING.
4. POSITIONED NEAR ACID UNLOADING STATION.
5. POSITIONED NEAR WASTE UNLOADING STATION #2.
6. POSITIONED NEAR UNLOADING STATION #3.

| no. מס | description תיאור | date תאריך | by מי | app. אש |
|---|---|---|---|---|
| P1 | INTERLOCKS UPDATE | 18.05.16 | Danuta | N.R. |
| P0 | PRELIMINARY | 15.11.15 | Danuta | N.R. |

REVISIONS הערות

| | by: מי | date: תאריך |
|---|---|---|
| design.: תכנון | K.F. | 15.11.15 |
| drawn: מצייר | Danuta | 15.11.15 |
| check.: בודק | N.R. | 15.11.15 |
| appr.: אשר | | |

elcon

title: שם הפרויקט — ELCON–USA

title: שם תת-פרויקט — UNIT 80
WASH OF UNLOADING STATIONS
P & I DIAGRAM

proj. no פרויקט: –

dwg. no: מס. תרשים: USA–80100–01–013

comp. dwg. no: מס. תרשים משנה: USA–80100–01–013

issue: הוצאה: P1

מס' Y:\PI&D\PRELIMINARY\LAST VERSIONS (ALL UNITS)\UNIT 80\USA-80100-01-013_P1.dwg, 21/06/2016 09:59:48

| | |
|---|---|
| I 80101 | IF LI-801244 IS HIGH HIGH OR LSH-801245 IS ON, CLOSE XV-801246 AND P-80104 |
| I 80102 | IF LI-801233 IS HIGH HIGH OR LSH-801203 IS ON, CLOSE XV-801234 AND P-80104 |
| I 80103 | IF LI-801205 IS HIGH HIGH OR LSH-801207 IS ON, CLOSE XV-801206 AND P-80104 |
| I 80104 | IF LI-801224 IS HIGH HIGH OR LSH-801226 IS ON, CLOSE XV-801225 AND P-80104 |
| I 80105 | IF LI-801218 IS HIGH HIGH OR LSH-801220 IS ON, CLOSE XV-801219 AND P-80104 |
| I 80106 | IF LI-801308 IS HIGH HIGH OR LSH-801309 IS ON, CLOSE XV-801307 AND P-80104 |
| I 80107 | IF LI-801305 IS HIGH HIGH OR LSH-801306 IS ON, CLOSE XV-801304 AND P-80104 |
| I 80108 | IF LI-801326 IS HIGH HIGH OR LSH-801328 IS ON, CLOSE XV-801325 AND P-80104 |
| I 80115 ÷ I 80109 | ONLY ONE FILLING VALVE CAN BE OPEN AT THE SAME TIME |
| I 80116 | IF LI-801403 IS HIGH HIGH OR LSH-801404 IS ON, CLOSE XV-801401 AND XV-801312 |
| I 80117 | IF LI-801702 IS HIGH HIGH OR LSH-801703 IS ON, CLOSE XV-801701 |
| I 80118 | IF LI-801722 IS HIGH HIGH OR LSH-801723 IS ON, CLOSE XV-80172 |
| I 80119 | IF LI-801722 IS LOW LOW, STOP P-80170 AND CLOSE XV-801716 |
| I 80120 | IF LI-801308 IS LOW LOW, CLOSE XV-801401 AND XV-801312 |
| I 80121 | IF LI-801802 IS HIGH HIGH OR LSH-801803 IS ON, CLOSE XV-801830, XV-801840 AND XV-801841 |
| I 80122 | IF LI-801403 IS LOW LOW, STOP P-80135, P-80144A, P-80144B AND CLOSE XV-801424 |
| I 80123 | IF NO TANK INLET VALVE IS OPEN, CLOSE P-80107 |
| I 80124 | ALLOW UNLOADING ONLY AFTER LAB APPROVAL |
| I 80125 | ALLOW UNLOADING ONLY AFTER LAB APPROVAL |
| I 80126 | IF NO TANK INLET VALVE IS OPEN, CLOSE P-80109 |
| I 80127 | IF LI-801602 IS HIGH HIGH OR LSH-801608 IS ON, CLOSE XV-801601 |
| I 80128 | ONLY ONE FILLING VALVE CAN BE OPEN AT THE SAME TIME |
| I 80129 | IF LI-801802 IS LOW LOW, STOP P-80161, P-80173, P-80179B AND CLOSE XV-801810, XV-801822, XV-801826, XV-801843 AND XV-801846 |
| I 80130 | IF LI-801244 IS LOW LOW, CLOSE P-20125A, P-20125B, P-20125C |
| I 80131 | IF LI-801205 IS LOW LOW, CLOSE XV-801208 |
| I 80132 | IF LI-801233 IS LOW LOW, CLOSE XV-801204 |
| I 80133 | IF XV-80120A AND XV-80120B ARE CLOSE, CLOSE VALVE XV-801210 |
| I 80134 | IF LI-801218 IS LOW LOW, CLOSE XV-801221 AND XV-801222 |
| I 80135 | IF LI-801224 IS LOW LOW, CLOSE XV-801227 AND XV-801228 |
| I 80136 | IF LI-801305 IS LOW LOW, CLOSE XV-801302 AND XV-801310 |
| I 80137 | IF LI-801326 IS LOW LOW, CLOSE XV-801323 AND XV-801343 |
| I 80138 | IF SC-20613 IS NOT RUNNING, STOP B-80121 AND CLOSE XV-801329, DO NOT ALLOW UNLOADING TO T-80122, T-80124, T-80134, T-80140 |
| I 80139 | IF LI-801702 IS LOW LOW, CLOSE XV-801718, XV-801830, XV-801840, XV-801841 |
| I 80140 | IF FI-801824 IS LOW LOW, CLOSE XV-801822 AND XV-801821 |
| I 80141 | IF FI-801828 IS LOW LOW, CLOSE XV-801843 AND XV-801838 |
| I 80142 | IF FI-801836 IS LOW LOW, CLOSE XV-801825 AND XV-801826 |
| I 80143 | IF FI-801820 IS LOW LOW, CLOSE XV-801810 AND XV-801809 |
| I 80144 | IF LEVEL IS LOW LOW, CLOSE S-80152 |
| I 80145 | IF VALVES XV-801104 OR XV-801506 OR XV-201101 OR XV-201104 OR XV-201107 ARE OPEN, CLOSE XV-801901 |

PRELIMINARY

| no. | description | date | by | app. |
|---|---|---|---|---|
| P0 | PRELIMINARY | 18.05.16 | Danuta | N.R. |

REVISIONS

| | by: | date: |
|---|---|---|
| design.: | K.F. | 18.05.16 |
| drawn.: | Danuta | 18.05.16 |
| check.: | N.R. | 18.05.16 |
| appr.: | | |

title: ELCON-USA

title: UNIT 80 AREA 100 INTERLOCKS LIST

elcon

| proj. no | dwg. no: | issue: |
|---|---|---|
| – | USA-80100-01-030 | P0 |

comp. dwg. no: USA-80100-01-030

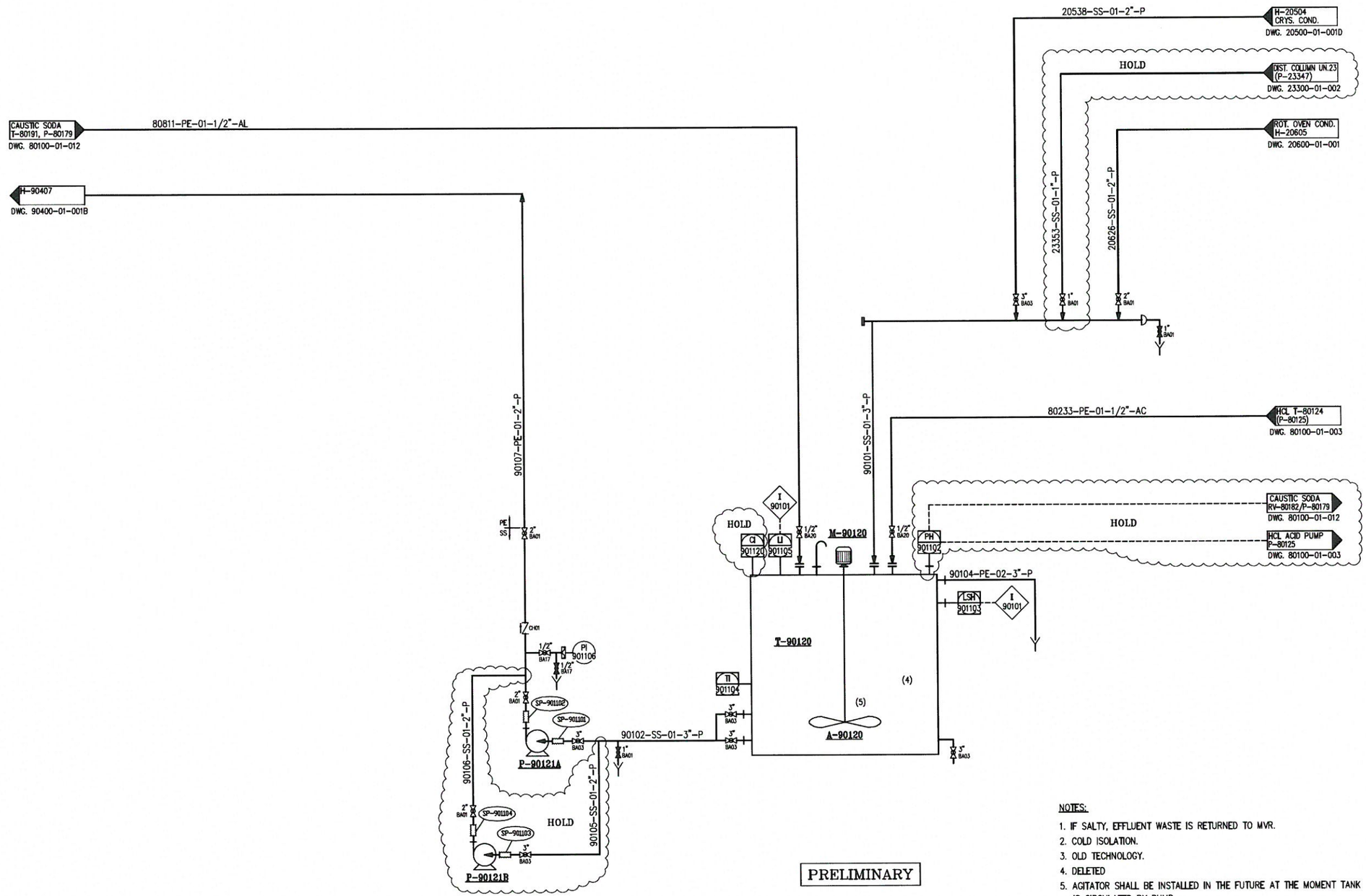


PRELIMINARY

NOTES:

1. IF SALTY, EFFLUENT WASTE IS RETURNED TO MVR.
2. COLD ISOLATION.
3. OLD TECHNOLOGY.
4. DELETED
5. AGITATOR SHALL BE INSTALLED IN THE FUTURE AT THE MOMENT TANK IS CIRCULATED BY PUMP.

| TAG No. | A-90120 | T-90120 | P-90121A/B (HOLD) |
|---|---|---|---|
| Service | EFFLUENT TANK AGITATOR | EFFLUENT WASTE TANK | TRANSFER PUMP |
| Fluid | EFFLUENT WATER | EFFLUENT WASTE WATER | EFFLUENT WASTE WATER |
| Size | 7.5 kW | 15 m3 | 5-10 m3/h; 20mLc |
| Mat. of const. | SS | SS | SS |
| Remarks | | | |

| no. | description | date | by | app. |
|---|---|---|---|---|
| P1 | INTERLOCKS UPDATE | 15.02.17 | Danuta | N.R. |
| P0 | PRELIMINARY | 15.11.15 | Danuta | N.R. |

REVISIONS

| | by: | date: |
|---|---|---|
| design: | K.F. | 15.11.15 |
| drawn: | Danuta | 15.11.15 |
| check: | N.R. | 15.11.15 |
| appr.: | | |

title: ELCON-USA

title: UNIT 90 EFFLUENT COLLECTING TANK P & I DIAGRAM

proj. no: –

dwg. no: USA-90100-01-001

comp. dwg. no: USA-90100-01-001

issue: P1

:\DG\:Y\PI&D\PRELIMINARY\LAST VERSIONS (ALL UNITS)\UNIT 90\USA-90100-01-001_P1.dwg, 19/02/2017 09:28:09

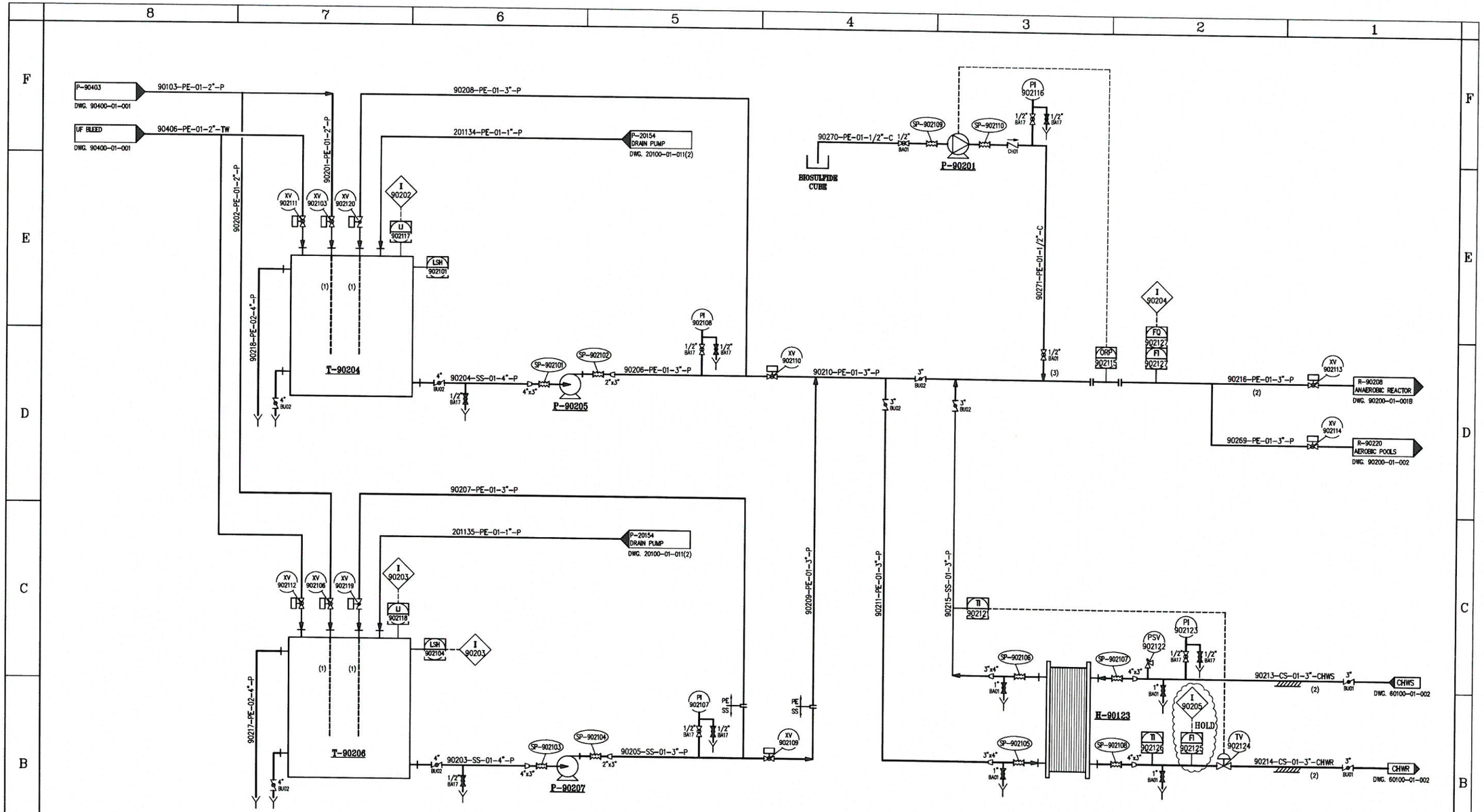


PRELIMINARY

NOTES:

1. ENTRANCE WITH DIP PIPE THAT SHALL REACH ABOUT 1 m FROM TANKS BOTTOM.
2. BIOLOGIC TREATMENT IS DESIGN TO 5 $m^3$/hr.
3. WITH EJECTOR.

| TAG No. | P-90201 | T-90204 | P-90205 | T-90206 | P-90207 | H-90123(EXIST) |
|---|---|---|---|---|---|---|
| Service | TRANSFER PUMP | BALANCING TANK | TRANSFER PUMP | BALANCING TANK | TRANSFER PUMP | HEAT EXCHANGER |
| Fluid | BIOSULFIDE | EFFLUENT WASTE WATER | EFFLUENT WASTE WATER | EFFLUENT WASTE WATER | EFFLUENT WASTE WATER | EFFLUENT WASTE WATER |
| Size | 0-5 l/h, 2.5 bar | 100 $m^3$ | 40 $m^3$/h, 25-30 mLc | 70 $m^3$ | 40 $m^3$/h, 25-30 mLc | 200,000 kCal/hr 5 $m^2$ |
| Mat. of const. | PP | PE | SS | PE | SS | SS |
| Remarks | | | | | | MODEL S-14 |

| no. | description | date | by | app. |
|---|---|---|---|---|
| P1 | INTERLOCKS UPDATE | 15.02.17 | Danuta | N.R. |
| P0 | PRELIMINARY | 06.12.15 | Danuta | N.R. |

REVISIONS

| | by: | date: |
|---|---|---|
| design.: | K.F. | 06.12.15 |
| drawn: | Danuta | 06.12.15 |
| check.: | N.R. | 06.12.15 |
| appr.: | | |

title: ELCON-USA

title: UNIT 90 BALANCING TANKS P & I DIAGRAM

elcon

proj. no: –

dwg. no: USA-90200-01-001A

comp. dwg. no: USA-90200-01-001A

issue: P1

:\D\:Y מג\:Y\PI&D\PRELIMINARY\LAST VERSIONS (ALL UNITS)\UNIT 90\USA-90200-01-001A_P1.dwg, 19/02/2017 09:34:56

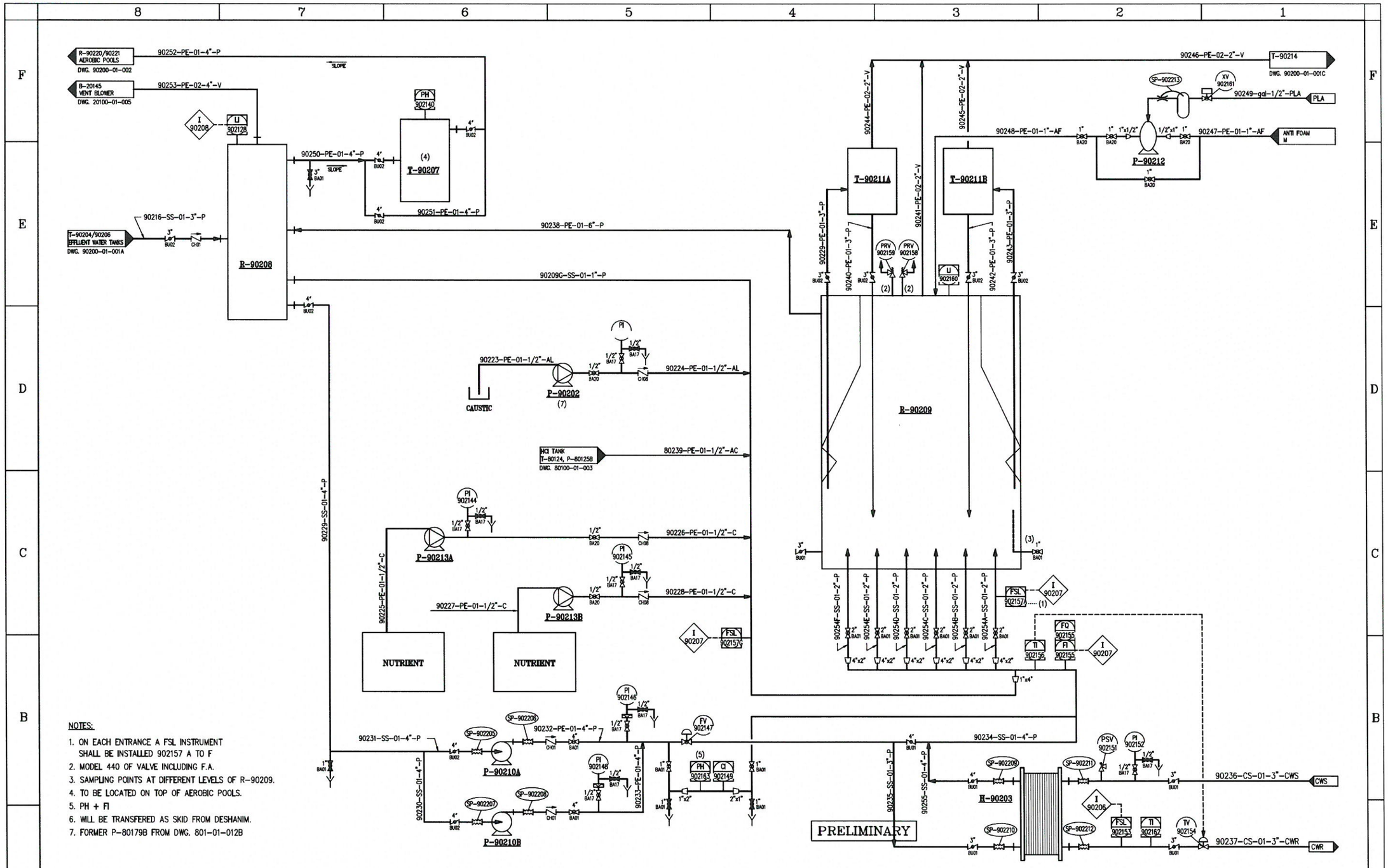


NOTES:

1. ON EACH ENTRANCE A FSL INSTRUMENT SHALL BE INSTALLED 902157 A TO F
2. MODEL 440 OF VALVE INCLUDING F.A.
3. SAMPLING POINTS AT DIFFERENT LEVELS OF R-90209.
4. TO BE LOCATED ON TOP OF AEROBIC POOLS.
5. PH + FI
6. WILL BE TRANSFERED AS SKID FROM DESHANIM.
7. FORMER P-80179B FROM DWG. 801-01-012B

| TAG No. | P-90202 | H-90203 | T-90207 | R-90208 | R-90209 | P-90210A/B | T-90211A/B | P-90212 | P-90213A/B |
|---|---|---|---|---|---|---|---|---|---|
| Service | CAUSTIC SODA PUMP | EFFLUENT COOLER | PH VESSEL | CONDITIONING TANK | ANAEROBIC REACTOR | TRANSFER PUMPS | VAPOUR VESSEL | ANTI FOAM PUMP | NUTRIENT PUMPS |
| Fluid | CAUSTIC SODA | EFFLUENT WASTE WATER | WEFFLUENT WASTE WATER | EFFLUENT WASTE WATER | EFFLUENT WASTE WATER | EFFLUENT WASTE WATER | VAPOURS | ANTI FOAM | NUTRIENT |
| Size | 0-10 l/h | 500000 kcal/h | H=0.5 m, D=0.2 m | 4-5 $m^3$ | 250 $m^3$ | 30-50$m^3$/h, 30mLc | LD=0.9m, H=1.7m | 1/2" AIR DIAPHRAGM | 5 l/h, 3 bar |
| Mat. of const. | | SS | PE/PVDF | | | SS | PE | PP | SS |
| Remarks | EXIST FROM DESHANIM | | | | | | | | |

| no. מס | description | date תאריך | by ע | app. אש |
|---|---|---|---|---|
| P1 | INTERLOCKS UPDATE | 15.02.17 | Danuta | N.R. |
| P0 | PRELIMINARY | 06.12.15 | Danuta | N.R. |

REVISIONS הערות

| | by: ע | date: תאריך |
|---|---|---|
| design.: עצב | K.F. | 06.12.15 |
| drawn: שרטט | Danuta | 06.12.15 |
| check.: בדק | N.R. | 06.12.15 |
| appr.: אשר | | |

elcon engineering & services

title: ELCON-USA שם הפרויקט

title: UNIT 90 ANAEROBIC TREATMENT P & I DIAGRAM שם הפרוטוקול

proj. no מספר: –

dwg. no: מספר גרף: USA-90200-01-001B

comp. dwg. no: USA-90200-01-001B מספר שרטוט מחשב

issue: P1 הוצאה

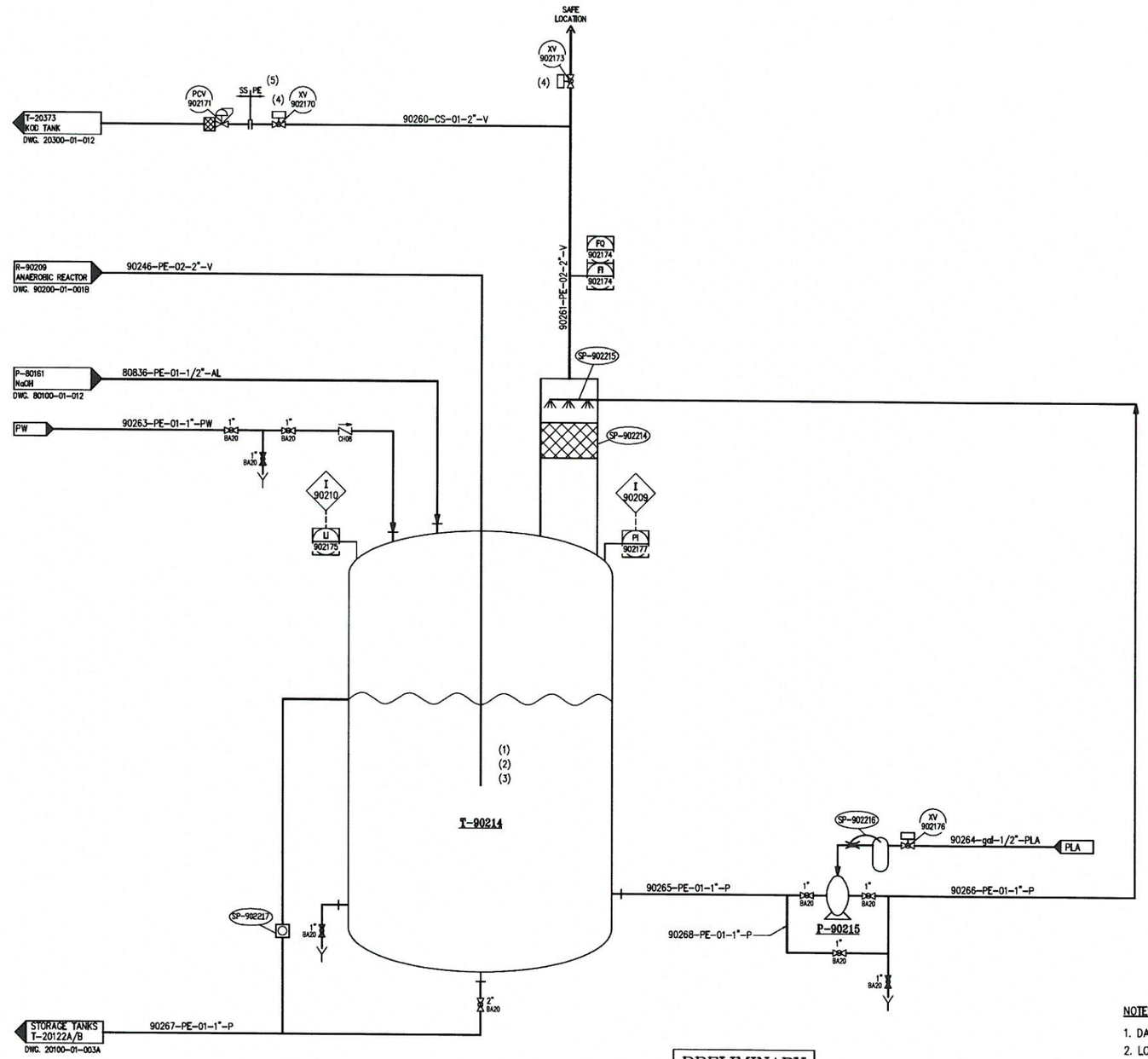


PRELIMINARY

NOTES:

1. DAILY pH TEST IN LAB AND MANUAL NaOH ADDITION.
2. LOCATED ABOVE AEROBIC POOLS.
3. WILL BE TRANSFERED FROM DESHANIM.
4. SAME DO FOR: XV-902170, XV-902173
5. LOCATED NEAR T-20372.

| TAG No. | T-90214 | P-90215 |
|---|---|---|
| Service | GAS SCRUBBER | CIRCULATION PUMP |
| Fluid | | PROCESS |
| Size | | 0.5" AIR DIAPH. |
| Mat. of const. | | PP |
| Remarks | EXIST | |

| no. | description | date | by | app. |
|---|---|---|---|---|
| P1 | INTERLOCKS UPDATE | 15.02.17 | Danuta | N.R. |
| P0 | PRELIMINARY | 06.12.15 | Danuta | N.R. |

REVISIONS

| | by: | date: |
|---|---|---|
| design.: | K.F. | 06.12.15 |
| drawn: | Danuta | 06.12.15 |
| check.: | N.R. | 06.12.15 |
| appr.: | | |

title: ELCON-USA

title: UNIT 90
ANAEROBIC TREATMENT
P & I DIAGRAM

proj. no: –
dwg. no: USA-90200-01-001C
comp. dwg. no: USA-90200-01-001C
issue: P1

:\D\:Y פס\:Y\PI&D\PRELIMINARY\LAST VERSIONS (ALL UNITS)\UNIT 90\USA-90200-01-001C P1.dwg, 19/02/2017 09:48:21

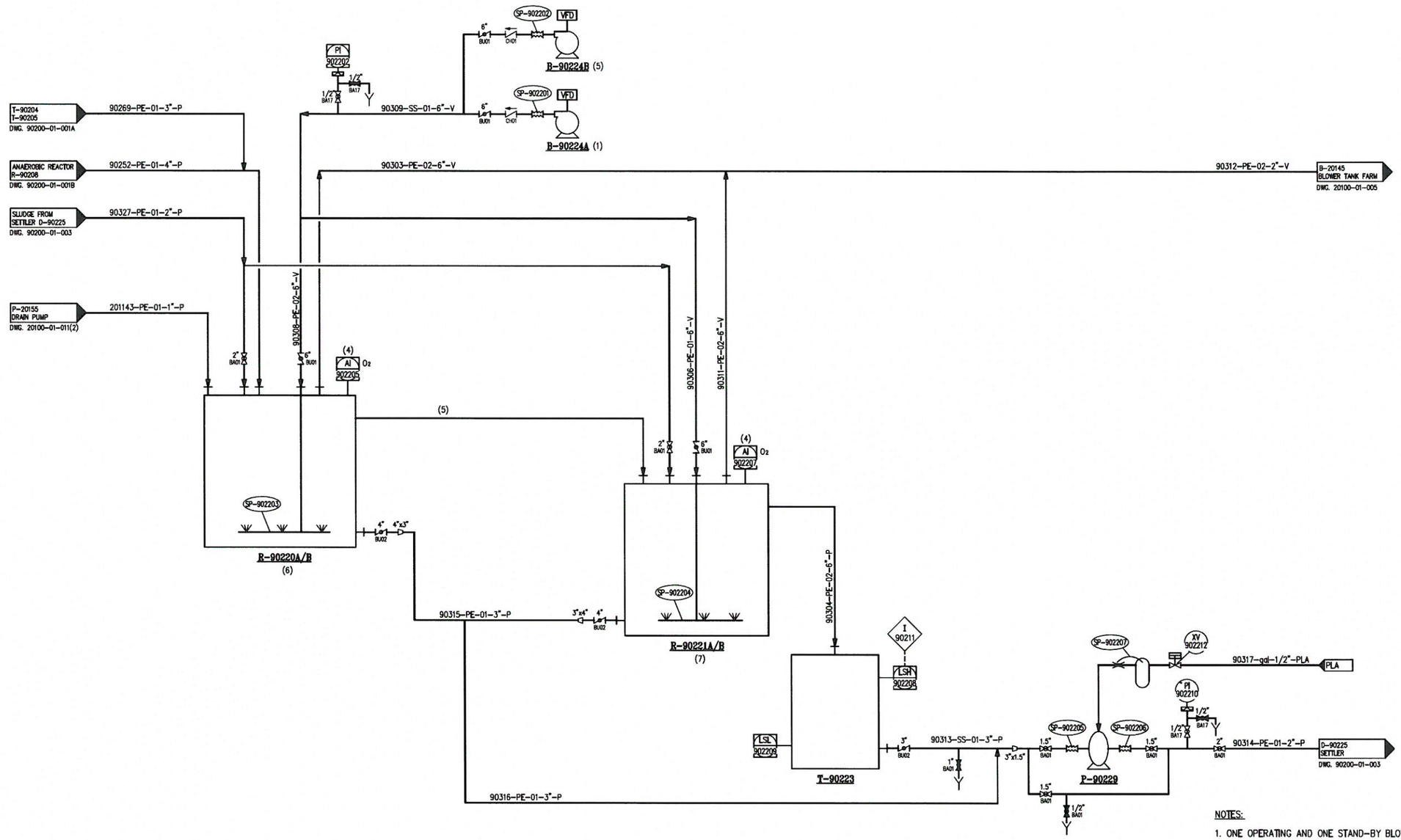


NOTES:

1. ONE OPERATING AND ONE STAND-BY BLOWER.
2. MANUAL OPERATION WORKING INDICATION ONLY.
3. THE NEED OF AN OVERFLOW TANK SHALL BE DETERMINED BY THE HEIGHT OF D-90225.
4. OXYGEN DETECTOR.
5. NOT A LINE ONLY A DAM.
6. OPTION FOR TWO IDENTICAL POOLS, R-90220A/B
7. OPTION FOR TWO IDENTICAL POOLS, R-90221A/B

PRELIMINARY

| TAG No. | R-90220 | R-90221 | T-90223 | B-90224A/B | P-90229 |
|---|---|---|---|---|---|
| Service | AEROBIC POOL | AEROBIC POOL | OVER FLOW TANK | FRESH AIR BLOWER | TRANSFER PUMP |
| Fluid | EFFLUENT WASTE WATER | EFFLUENT WASTE WATER | | AIR | EFFLUENT WASTE WATER |
| Size | 400 $m^3$ | 400 $m^3$ | 4-5 $m^3$ | XXX $Nm^3/h$ 6 m.c | 1.5 " AIR DIAPH. |
| Mat. of const. | CS WITH EPOXY LINING | CS WITH EPOXY LINING | | SS | SS |
| Remarks | | | | | |

| no. | description | date | by | app. |
|---|---|---|---|---|
| P1 | INTERLOCKS AND No. OF POOLS UPDATE | 15.02.17 | Danuta | N.R. |
| P0 | PRELIMINARY | 06.12.15 | Danuta | N.R. |

REVISIONS

| | by: | date: |
|---|---|---|
| design.: | K.F. | 06.12.15 |
| drawn: | Danuta | 06.12.15 |
| check.: | N.R. | 06.12.15 |
| appr.: | | |

title: ELCON-USA

title: UNIT 90 AEROBIC TREATMENT P & I DIAGRAM

proj. no: –

dwg. no: USA-90200-01-002

comp. dwg. no: USA-90200-01-002

issue: P1

:\מ\:Y מ\:Y\PI&D\PRELIMINARY\LAST VERSIONS (ALL UNITS)\UNIT 90\USA-90200-01-002_P1.dwg, 19/02/2017 10:11:57

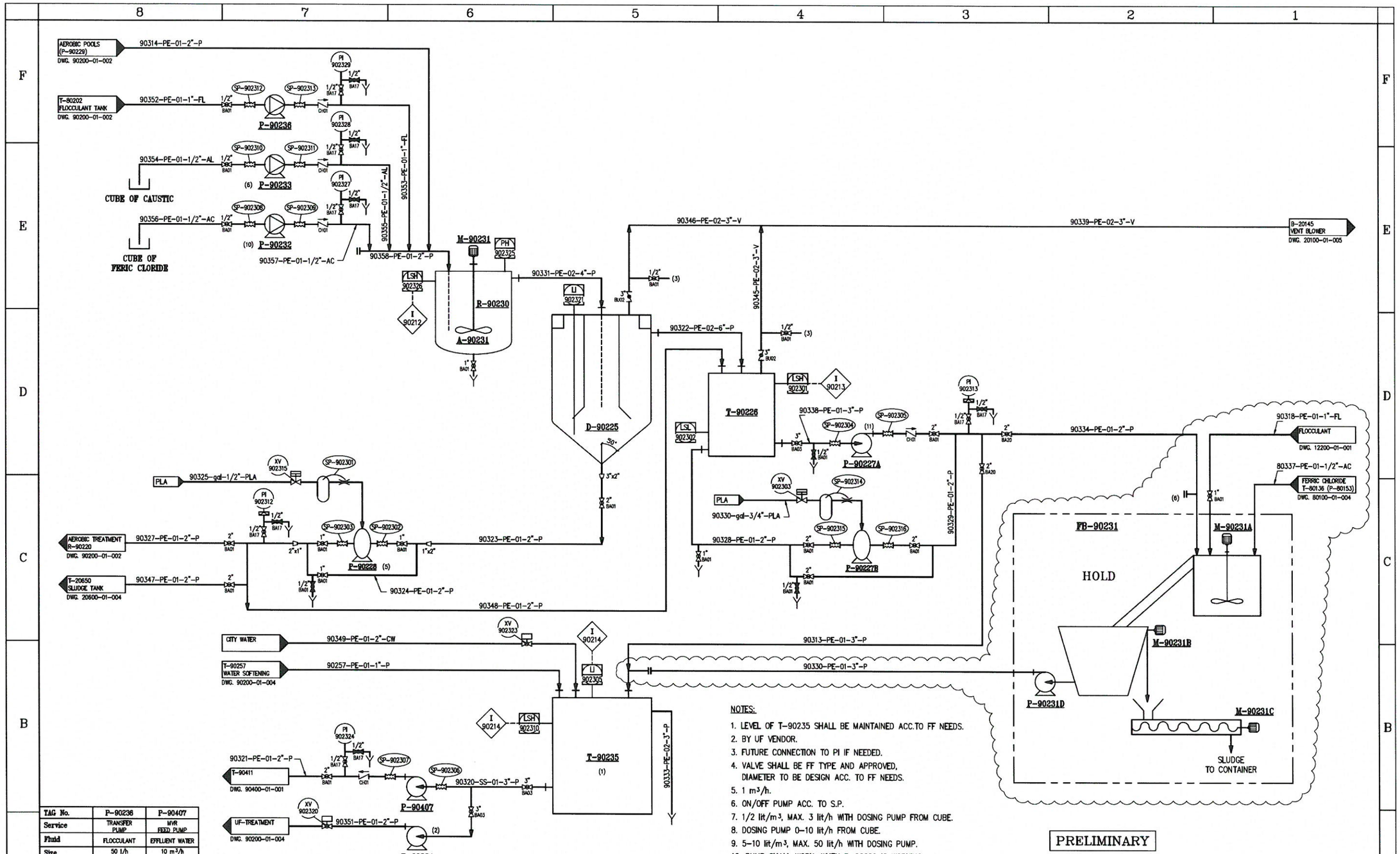


NOTES:

1. LEVEL OF T-90235 SHALL BE MAINTAINED ACC.TO FF NEEDS.
2. BY UF VENDOR.
3. FUTURE CONNECTION TO PI IF NEEDED.
4. VALVE SHALL BE FF TYPE AND APPROVED, DIAMETER TO BE DESIGN ACC. TO FF NEEDS.
5. 1 $m^3/h$.
6. ON/OFF PUMP ACC. TO S.P.
7. 1/2 lit/$m^3$, MAX. 3 lit/h WITH DOSING PUMP FROM CUBE.
8. DOSING PUMP 0-10 lit/h FROM CUBE.
9. 5-10 lit/$m^3$, MAX. 50 lit/h WITH DOSING PUMP.
10. PUMP SHALL WORK, WHEN P-90229 IS WORKING.
11. P-90227A (CENTRIFUGAL) IS NOT CONNECTED TO ELECTRICITY.

PRELIMINARY

| TAG No. | P-90236 | P-90407 |
|---|---|---|
| Service | TRANSFER PUMP | MVR FEED PUMP |
| Fluid | FLOCCULANT | EFFLUENT WATER |
| Size | 50 l/h 2-2.5 bar | 10 $m^3/h$ 30 m.c |
| Mat. of const. | PP | SS |
| Remarks | | |

| TAG No. | D-90225 | T-90226 | P-90227A | P-90227B | P-90228 | R-90230 | A-90231 | FB-90231 | P-90231D | P-90232 | P-90233 | P-90234 (2) | T-90235 |
|---|---|---|---|---|---|---|---|---|---|---|---|---|---|
| Service | SETTLER | OVERFLOW TANK | TRANSFER PUMP | TRANSFER PUMP | TRANSFER PUMP | REACTOR | AGITATOR | BELT FILTER SYSTEM | TRANSFER PUMP | TRANSFER PUMP | TRANSFER PUMP | TRANSFER PUMP | FIRE WATER TANK |
| Fluid | EFFLUENT WASTE WATER | EFFLUENT WASTE WATER | EFFLUENT WASTE WATER | EFFLUENT WASTE WATER | WASTE WATER | EFFLUENT WATER + ADDITIVES | EFFLUENT WATER + ADDITIVES | | SPCP FILTRATE | FERIC CHLORIDE | CAUSTIC | EFFLUENT WATER | EFFLUENT WATER |
| Size | 100 $m^3$ | 5 $m^3$ | 5-10 $m^3/h$ 20 m.c | 2" AIR DIAPH. | 1" AIR DIAPH. | 2 $m^3$ | | | 10-15 $m^3/h$ 20 m.c | 3 l/h, 2-2.5 bar | 0-10 l/h, 2-2.5 bar | | 415 $m^3$ |
| Mat. of const. | CS | SS | SS | SS | SS | SS | SS | | SS | PP/TEFLON | PP | | CS |
| Remarks | | | | | | EXIST | | | TO BE SUPPLIED BY BELT FILTER SYSTEM VENDOR | | | | |

| no. | description | date | by | sp. |
|---|---|---|---|---|
| P1 | INTERLOCKS UPDATE | 15.02.17 | Danuta | N.R. |
| P0 | PRELIMINARY | 06.12.15 | Danuta | N.R. |

REVISIONS

| | by: | date: |
|---|---|---|
| design.: | K.F. | 06.12.15 |
| drawn: | Danuta | 06.12.15 |
| check.: | N.R. | 06.12.15 |
| appr.: | | |

title: ELCON-USA

title: UNIT 90 ANAEROBIC TREATMENT P & I DIAGRAM

proj. no: –

dwg. no: USA-90200-01-003

comp. dwg. no: USA-90200-01-003

issue: P1

:\D\:Y ᴅᴅ\:Y\PI&D\PRELIMINARY\LAST VERSIONS (ALL UNITS)\UNIT 90\USA-90200-01-003_P1.dwg, 19/02/2017 10:17:09

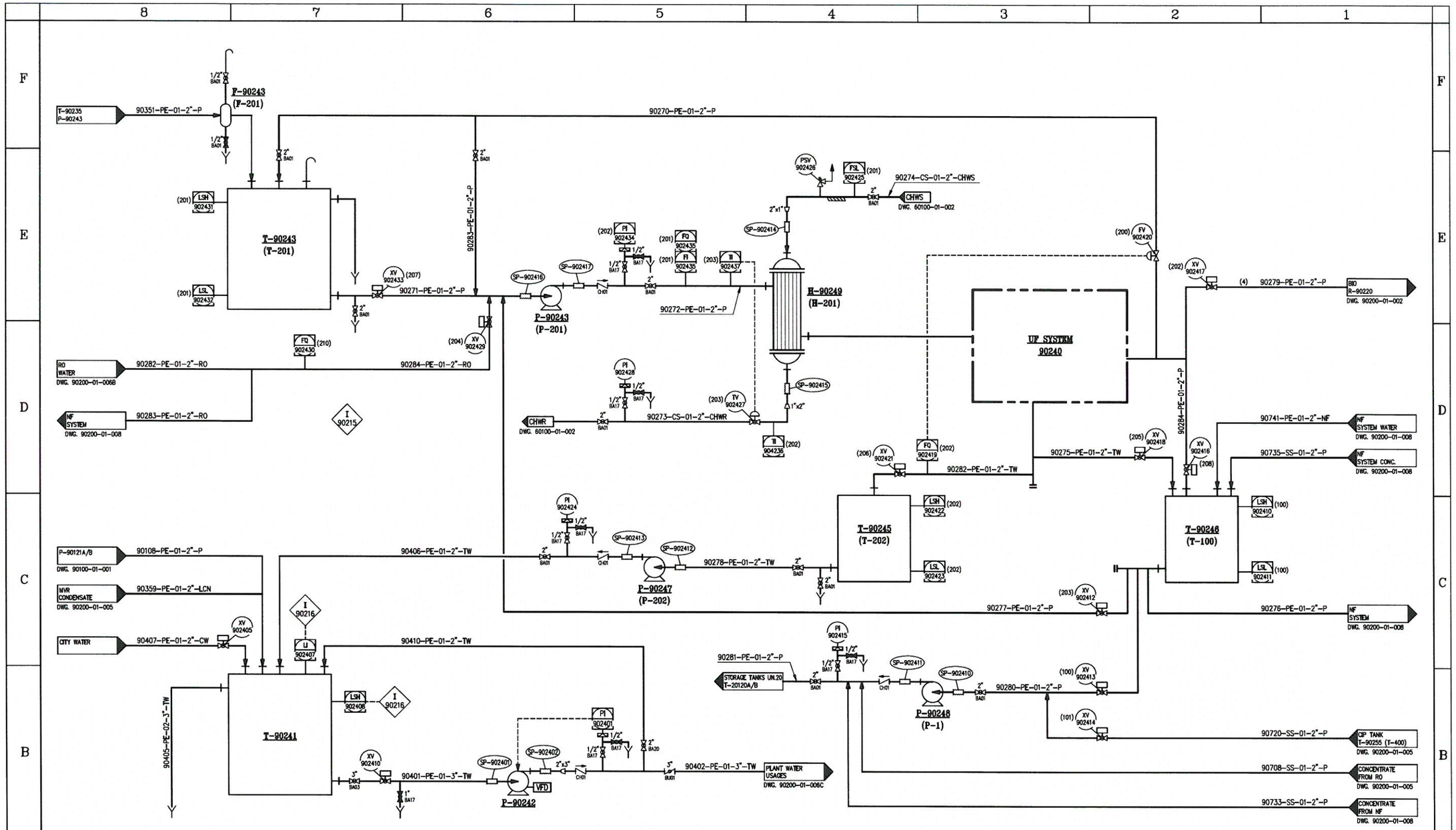


PRELIMINARY

NOTES:

1. INTERLOCKS FOR SYSTEM ACC. TO VENDOR RECOMENDATION DURING DETAIL DESIGN.
2. DELETED.
3. DELETED.
4. UF BLEED. ~5%, ~6 m³/day.

| TAG No. | 90240 | T-90241 | P-90242 | F-90243 (F-201) | T-90243 (T-201) | P-90243 (P-201) | T-90245 (T-202) | T-90246 (T-100) | P-90247 (P-202) | P-90248 (P-1) | H-90249 (H-201) |
|---|---|---|---|---|---|---|---|---|---|---|---|
| Service | UF SYSTEM | FIRE WATER TANK | FIRE WATER PUMP | POLISHING FILTER | PRIMARY TANK | TRANSFER PUMP | FILTRATE TANK | CIP TANK | TRANSFER PUMP | TRANSFER PUMP | HEAT EXCHANGER |
| Fluid | TREATED WASTE WATER | UF WATER | UF WATER | EFFLUENT WATER | UF WATER | | | ALCALIC WASHING WATER | UF FILTRATE | | |
| Size | | 416 m³ | 40 m³/h, 40 m.c | | 5 m³ | | 1-2 m³ | 1-2 m³ | | | |
| Mat. of const. | | CS | SS | CAUSTIC | SS/PE/CS | | PE | PE | | | |
| Remarks | BY VENDOR OF UF SYSTEM | | | | | BY VENDOR OF UF SYSTEM | | | | | BY VENDOR OF UF SYSTEM |

| no. | description | date | by | app. |
|---|---|---|---|---|
| P1 | INTERLOCKS UPDATE | 15.02.17 | Danuta | N.R. |
| P0 | PRELIMINARY | 06.12.15 | Danuta | N.R. |

REVISIONS

| | by: | date: |
|---|---|---|
| design.: | K.F. | 06.12.15 |
| drawn: | Danuta | 06.12.15 |
| check.: | N.R. | 06.12.15 |
| appr.: | | |

elcon

ELCON-USA

UNIT 90
UF TREATMENT
P & I DIAGRAM

proj. no: –
dwg. no: USA-90200-01-004
comp. dwg. no: USA-90200-01-004
issue: P1

:\מס\:Y\PI&D\PRELIMINARY\LAST VERSIONS (ALL UNITS)\UNIT 90\USA-90200-01-004 P1.dwg, 19/02/2017 12:07:38

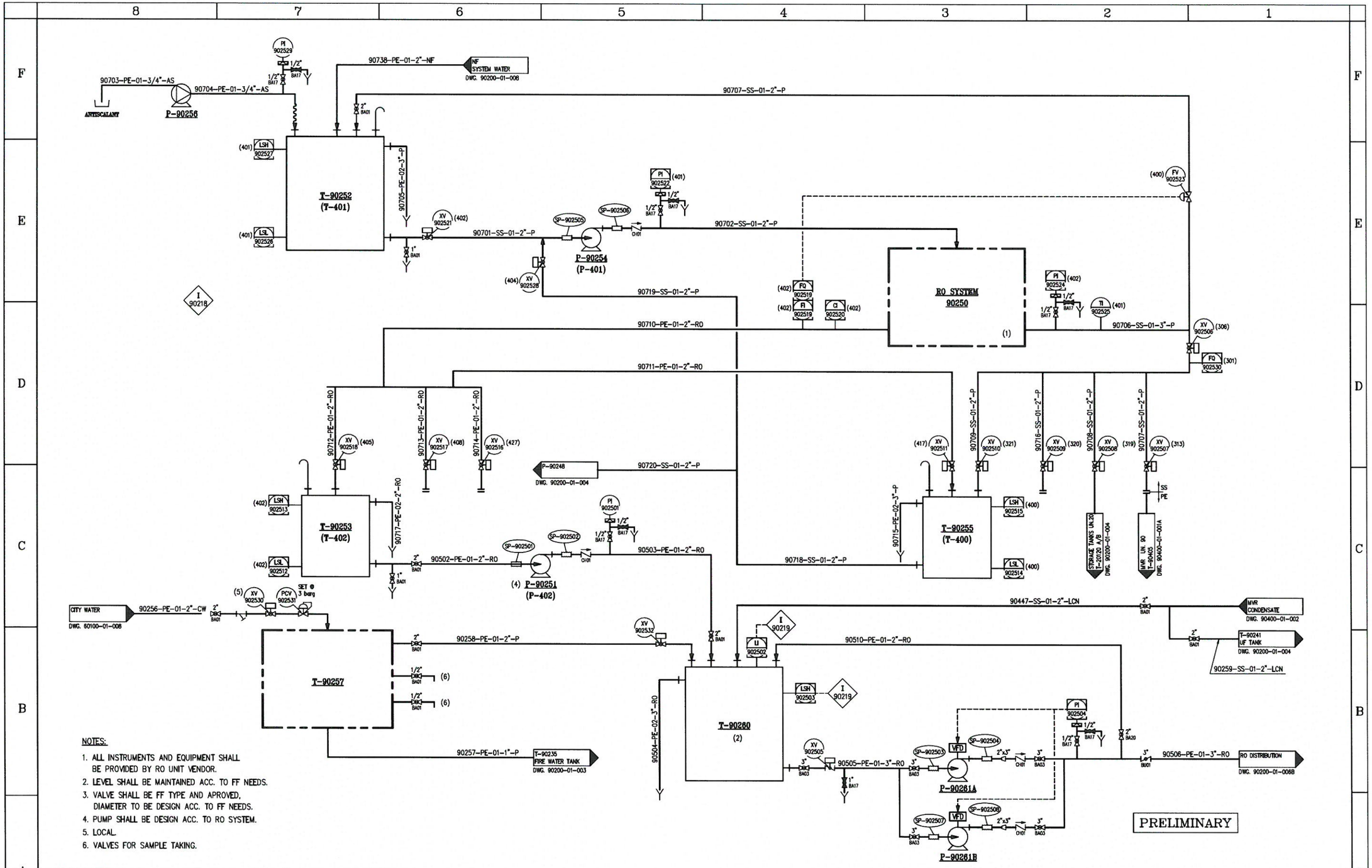


NOTES:

1. ALL INSTRUMENTS AND EQUIPMENT SHALL BE PROVIDED BY RO UNIT VENDOR.
2. LEVEL SHALL BE MAINTAINED ACC. TO FF NEEDS.
3. VALVE SHALL BE FF TYPE AND APROVED, DIAMETER TO BE DESIGN ACC. TO FF NEEDS.
4. PUMP SHALL BE DESIGN ACC. TO RO SYSTEM.
5. LOCAL.
6. VALVES FOR SAMPLE TAKING.

| TAG No. | 90250 | P-90251 | T-90252 (T-401) | T-90253 (T-402) | P-90254 | T-90255 (T-400) | P-90256 | T-90257 | T-90260 | P-90261 A/B |
|---|---|---|---|---|---|---|---|---|---|---|
| Service | RO SYSTEM | TRANSFER PUMP | PRIMARY TANK | FILTRATE TANK | TRANSFER PUMP | CIP TANK | ANTISCALAR PUMP | WATER SOFTENING SYSTEM | RO WATER TANK | TRANSFER PUMP |
| Fluid | TREATED WASTE WATER | RO WATER | RO WATER | | | ALCALIC WASHING WATER | ANTISCALAR | | RO WATER | RO WATER |
| Size | | | 10 $m^3$ | 1-2 $m^3$ | | 1-2 $m^3$ | | | 150 $m^3$ | 40 $m^3/h$, 40 mLc |
| Mat. of const. | | SS | PE | PE | | PE | PE | PE | CS | SS |
| Remarks | BY VENDOR OF RO SYSTEM | | | | BY VENDOR OF RO SYSTEM | | | TREITTEL | | |

| no. | description | date | by | app. |
|---|---|---|---|---|
| P1 | INTERLOCKS UPDATE | 15.02.17 | Danuta | N.R. |
| P0 | PRELIMINARY | 06.12.15 | Danuta | N.R. |

REVISIONS

| | by: | date: |
|---|---|---|
| design.: | K.F. | 06.12.15 |
| drawn.: | Danuta | 06.12.15 |
| check.: | N.R. | 06.12.15 |
| appr.: | | |

title: ELCON-USA

title: UNIT 90 RO TREATMENT P & I DIAGRAM

proj. no: –

dwg. no: USA-90200-01-005

comp. dwg. no: USA-90200-01-005

issue: P1

elcon

:\מק\:Y:\PI&D\PRELIMINARY\LAST VERSIONS (ALL UNITS)\UNIT 90\USA-90200-01-005_P1.dwg, 19/02/2017 11:18:56

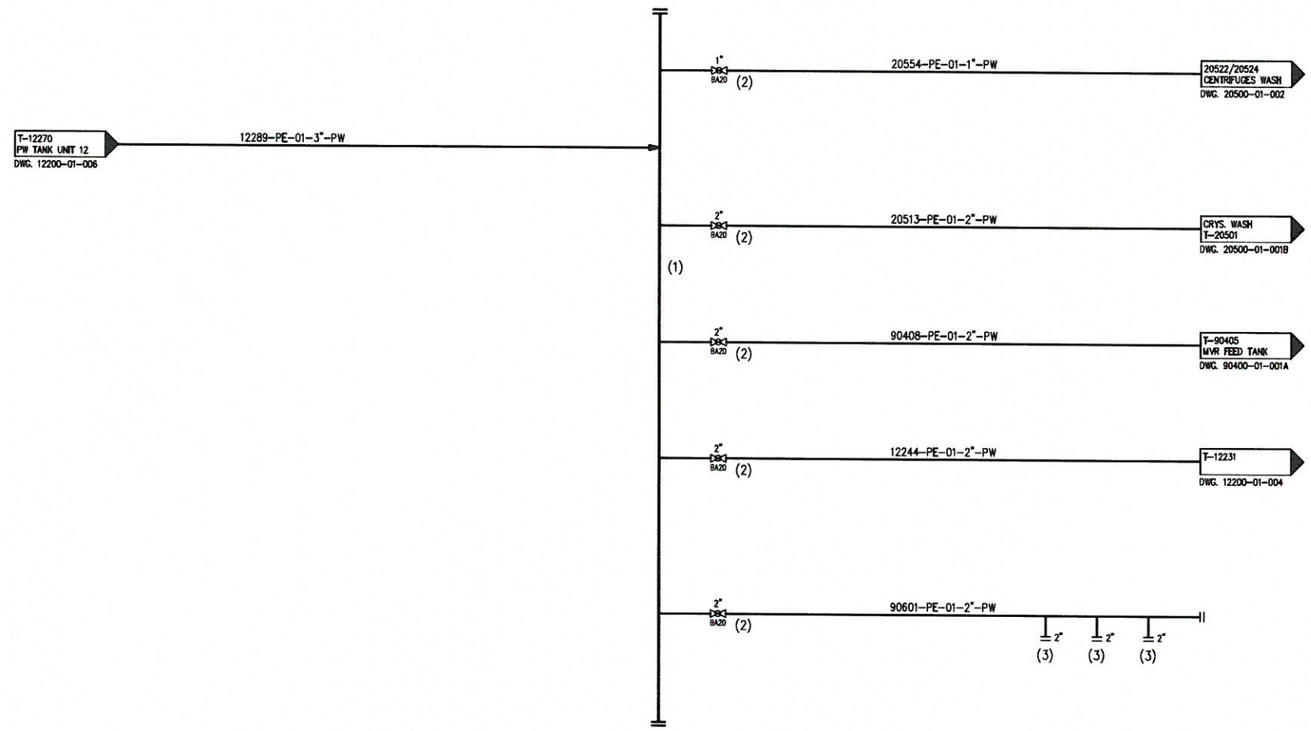


NOTES:

1. HEADERS AND SUBHEADERS SHALL BE DESIGN ACC. TO ACTUAL LAYOUT AND PIPE RACKS.
2. ACCESIBLE LOCATION.
3. FUTURE CONNECTION TO SLUDGE WASH.

PRELIMINARY

| no. | description | date | by | app. |
|---|---|---|---|---|
| P0 | PRELIMINARY | 15.02.17 | Danuta | N.R. |

REVISIONS

| | by: | date: |
|---|---|---|
| design.: | K.F. | 15.02.17 |
| drawn.: | Danuta | 15.02.17 |
| check.: | N.R. | 15.02.17 |
| appr.: | | |

title: ELCON-USA

title: UNIT 90
PLANT WATER DISTRIBUTION
P & I DIAGRAM

proj. no: –
dwg. no: USA-90200-01-006A
issue: P0
comp. dwg. no: USA-90200-01-006A

Y:\מפ\Y:\PI&D\PRELIMINARY\LAST VERSIONS (ALL UNITS)\UNIT 90\USA-90200-01-006A_P0.dwg, 19/02/2017 11:37:04

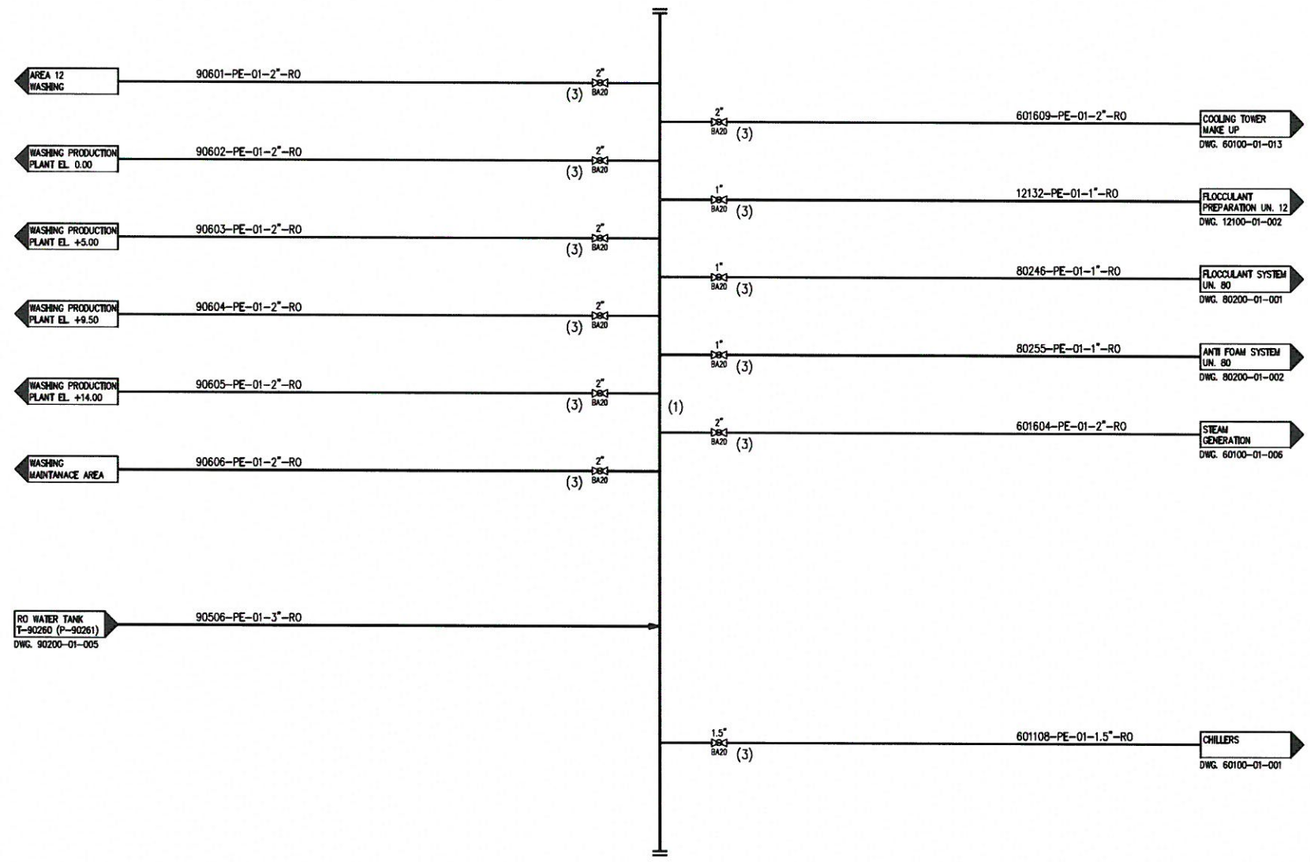


NOTES:

1. HEADERS AND SUBHEADERS SHALL BE DESIGN ACC. TO ACTUAL LAYOUT AND PIPE RACKS.
2. MECH SEAL WASH SHALL BE CONNECTED FROM HEADER.
3. ACCESIBLE LOCATION.

PRELIMINARY

| no. | description | date | by | ap. |
|---|---|---|---|---|
| P0 | PRELIMINARY | 15.02.17 | Danuta | N.R. |

REVISIONS

| | by: | date: |
|---|---|---|
| design.: | K.F. | 15.02.17 |
| drawn: | Danuta | 15.02.17 |
| check.: | N.R. | 15.02.17 |
| appr.: | | |

title: ELCON-USA

title: UNIT 90 RO WATER DISTRIBUTION P & I DIAGRAM

proj. no: –

dwg. no: USA-90200-01-006B

comp. dwg. no: USA-90200-01-006B

issue: P0

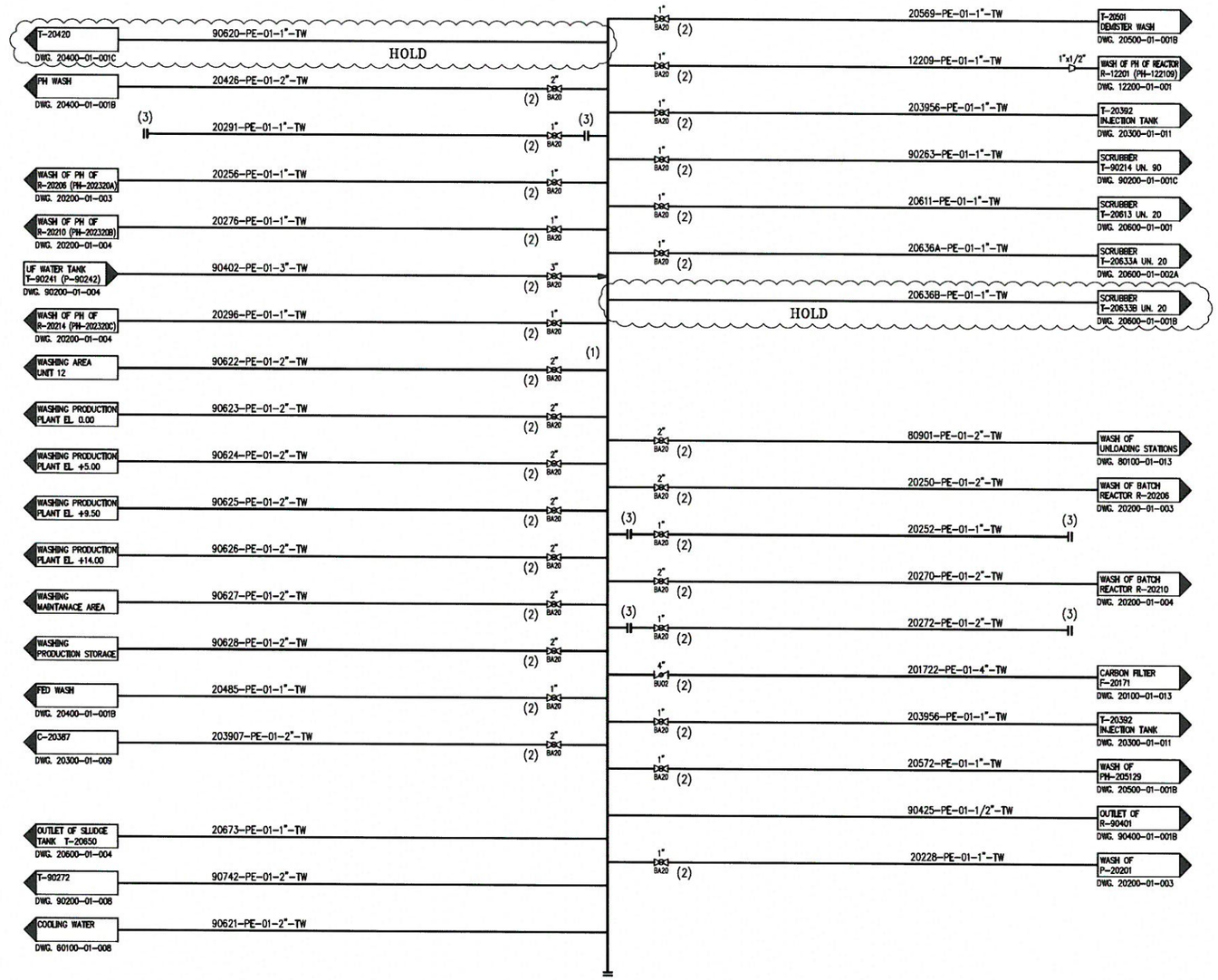


PRELIMINARY

NOTES:

1. HEADERS AND SUBHEADERS SHALL BE DESIGN ACC. TO ACTUAL LAYOUT AND PIPE RACKS.
2. ACCESIBLE LOCATION.
3. LI AND LSH WERE CANCELLED BUT LINES EXIST.

| no. | description | date | by | app. |
|---|---|---|---|---|
| P0 | PRELIMINARY | 15.02.17 | Danuta | N.R. |

REVISIONS

| | by: | date: |
|---|---|---|
| design.: | K.F. | 15.02.17 |
| drawn: | Danuta | 15.02.17 |
| check.: | N.R. | 15.02.17 |
| appr.: | | |

title: ELCON-USA

title: UNIT 90
PLANT WATER AFTER UF DISTRIBUTION
P & I DIAGRAM

elcon

| proj. no | dwg. no: | issue: |
|---|---|---|
| – | USA-90200-01-006C | P0 |

comp. dwg. no: USA-90200-01-006C

':\D\:Y D\:\:Y\PI&D\PRELIMINARY\LAST VERSIONS (ALL UNITS)\UNIT 90\USA-90200-01-006C_P0.dwg, 19/02/2017 12:13:22

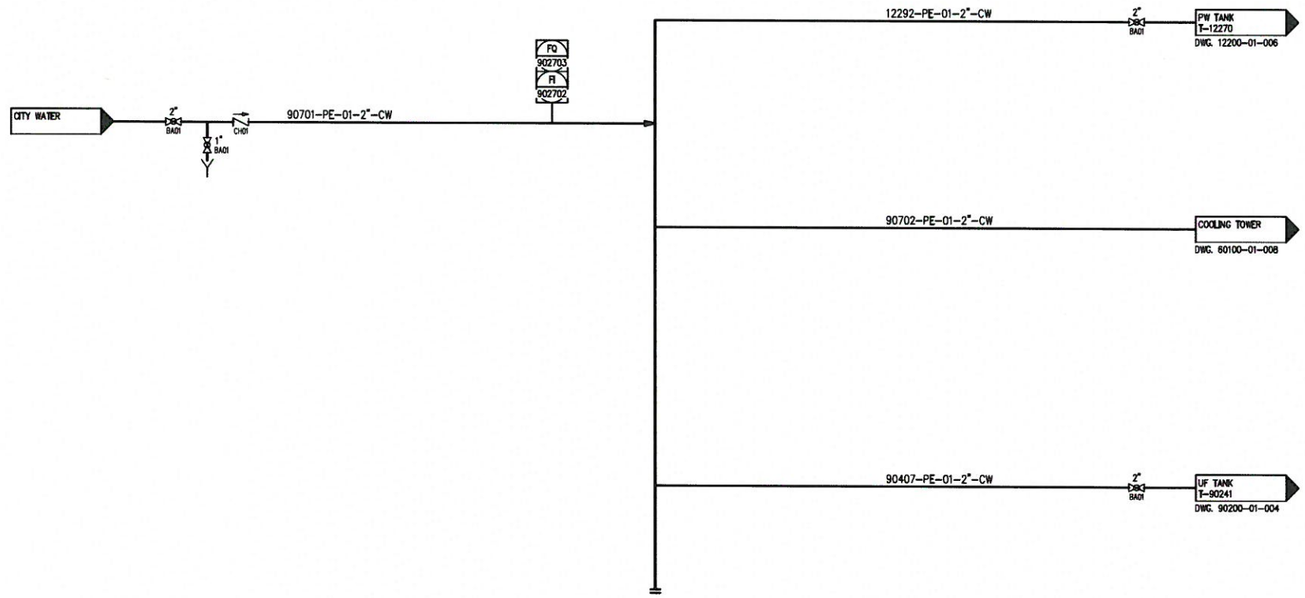


PRELIMINARY

| no. מס | description | date תאריך | by מ | app. אש |
|---|---|---|---|---|
| P0 | PRELIMINARY | 15.02.17 | Danuta | N.R. |

REVISIONS הערות

| | by: מ | date: תאריך |
|---|---|---|
| design.: תכנון | K.F. | 15.02.17 |
| drawn: שרטט | Danuta | 15.02.17 |
| check.: בדיקה | N.R. | 15.02.17 |
| appr.: אישור | | |

elcon engineering

title: שם הפרויקט ELCON-USA

title: שם הנושא UNIT 90
CITY WATER DISTRIBUTION
P & I DIAGRAM

proj. no מספר פרויקט: –

dwg. no: מספר שרטוט: USA-90200-01-007

comp. dwg. no: מספר שרטוט מחשב: USA-90200-01-007

issue: הוצאה P0

Y:\מכון Y:\PI&D\PRELIMINARY\LAST VERSIONS (ALL UNITS)\UNIT 90\USA-90200-01-007 P0.dwg, 19/02/2017 11:51:30

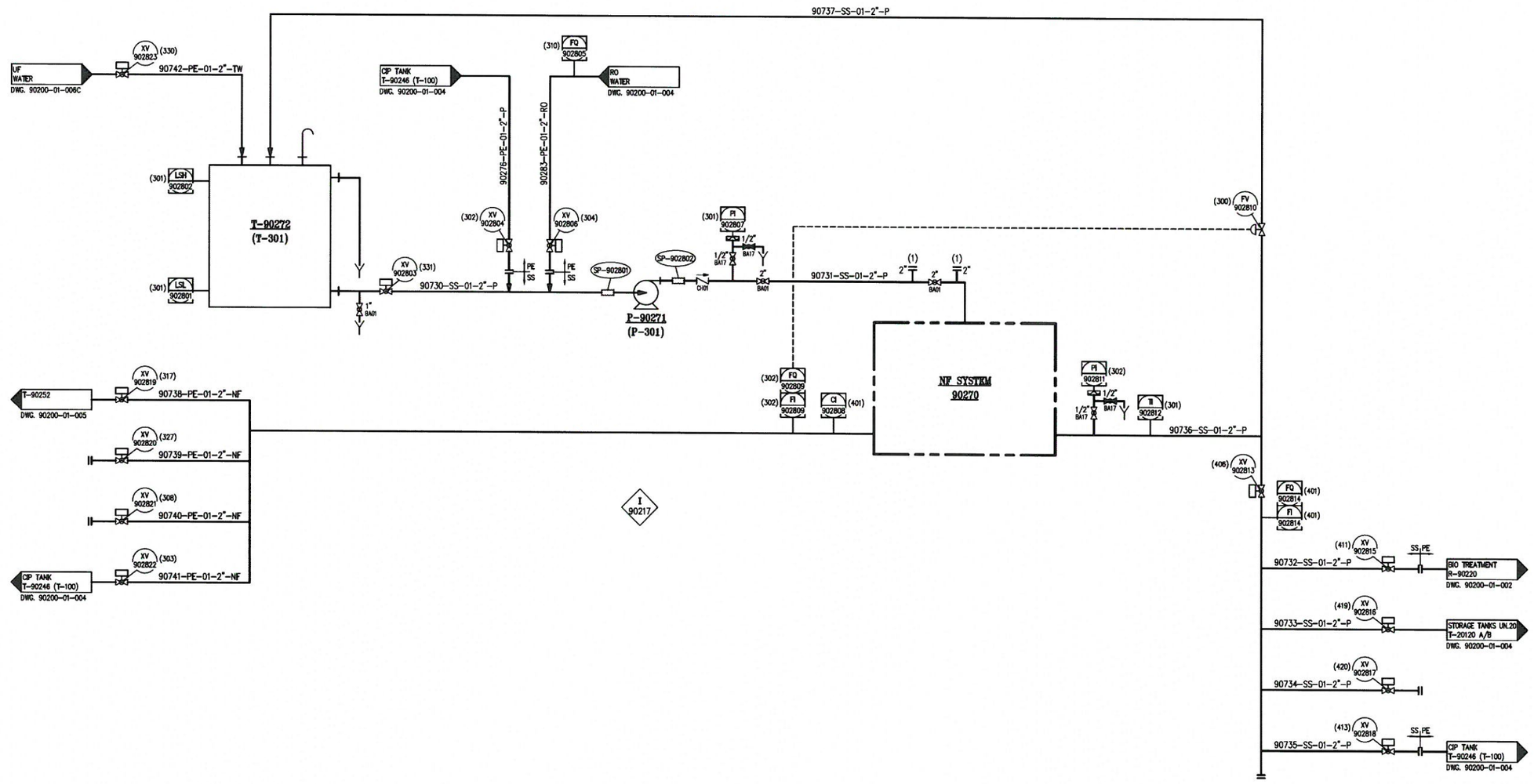


PRELIMINARY

(1) COOLING SYSTEM IN FUTURE.

| TAG No. | 90270 | P-90271 | T-90272 |
|---|---|---|---|
| Service | NF SYSTEM | TRANSFER PUMP | PRIMARY TANK |
| Fluid | TREATED WASTE WATER | | NF WATER |
| Size | | | 5 m³ |
| Mat. of const. | | | PE |
| Remarks | BY VENDOR OF RO SYSTEM | BY VENDOR OF UF SYSTEM | |

| no. | description | date | by | app. |
|---|---|---|---|---|
| P0 | PRELIMINARY | 15.02.17 | Danuta | N.R. |

REVISIONS

| | by: | date: |
|---|---|---|
| design.: | K.F. | 15.02.17 |
| drawn.: | Danuta | 15.02.17 |
| check.: | N.R. | 15.02.17 |
| appr.: | | |

title: ELCON-USA

title: UNIT 90 NF TREATMENT P & I DIAGRAM

elcon

proj. no: –

dwg. no: USA-90200-01-008

comp. dwg. no: USA-90200-01-008

issue: P0

:\D\:Y DD\:Y\PI&D\PRELIMINARY\LAST VERSIONS (ALL UNITS)\UNIT 90\USA-90200-01-008_P0.dwg, 19/02/2017 11:55:36

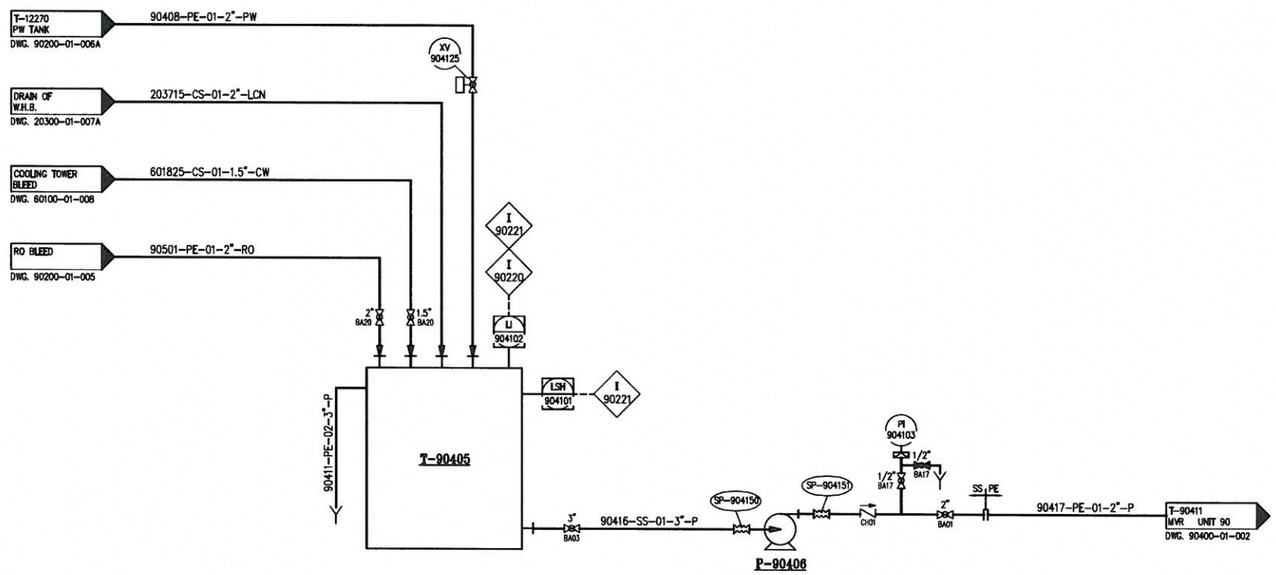


PRELIMINARY

| TAG No. | T-90405 | P-90406 |
|---|---|---|
| Service | MVR FEED TANK | MVR FEED PUMP |
| Fluid | EFFLUENT WASTE WATER | EFFLUENT WASTE WATER |
| Size | 100 m³ | 15 m³/h 30 m/c |
| Mat. of const. | CS | SS |
| Remarks | | |

| no. | description | date | by | ap. |
|---|---|---|---|---|
| P1 | INTERLOCKS UPDATE | 15.02.17 | Danuta | N.R. |
| P0 | PRELIMINARY | 06.12.15 | Danuta | N.R. |

REVISIONS

| | by: | date: |
|---|---|---|
| design.: | K.F. | 06.12.15 |
| drawn: | Danuta | 06.12.15 |
| check.: | N.R. | 06.12.15 |
| appr.: | | |

title: ELCON-USA

title: UNIT 90
MVR FEED
P & I DIAGRAM

elcon

proj. no: –
dwg. no: USA-90400-01-001A
issue: P1
comp. dwg. no: USA-90400-01-001A

Y:\PI&D\PRELIMINARY\LAST VERSIONS (ALL UNITS)\UNIT 90\USA-90400-01-001A_P1.dwg, 21/02/2017 08:24:51

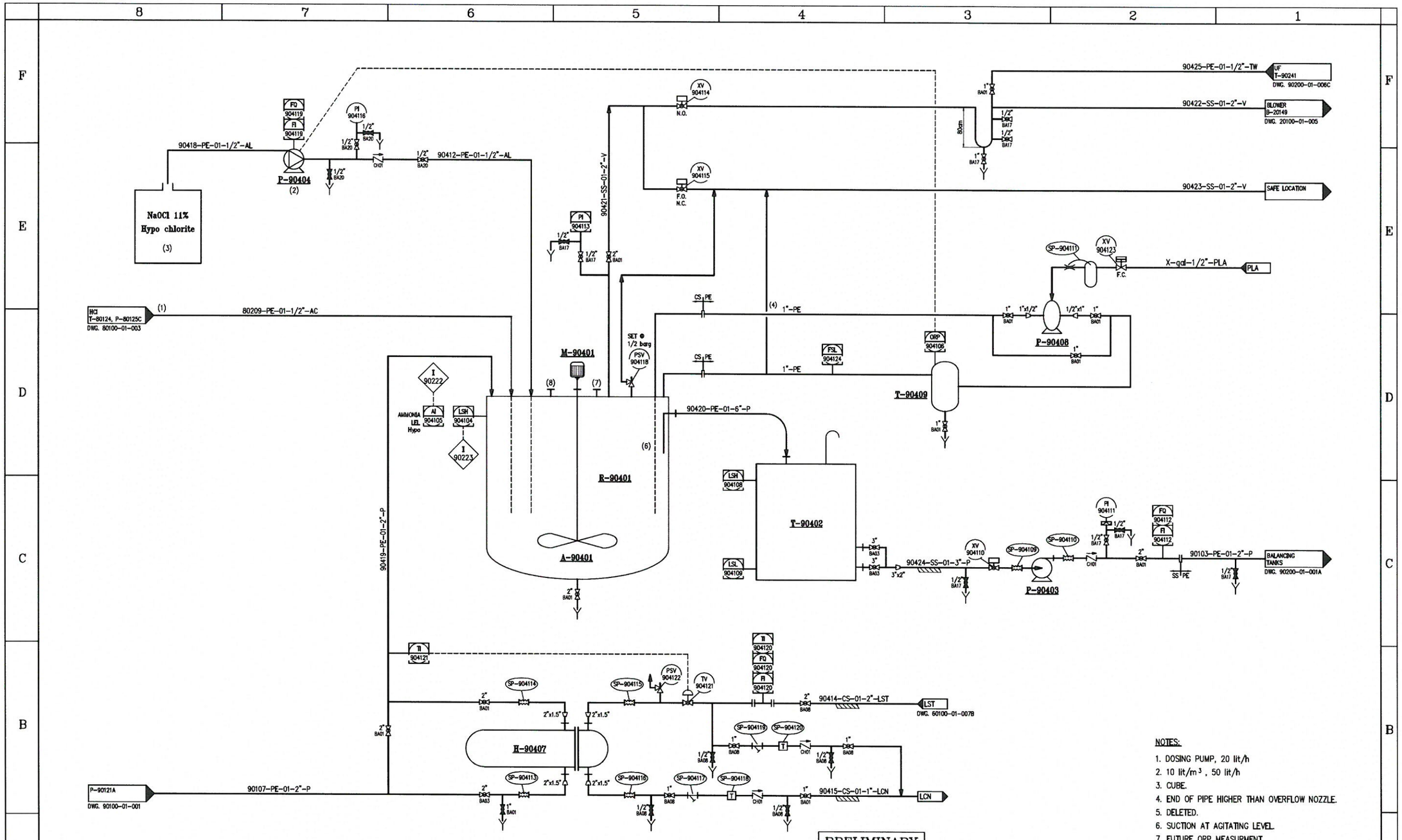


PRELIMINARY

NOTES:

1. DOSING PUMP, 20 lit/h
2. 10 lit/m³ , 50 lit/h
3. CUBE.
4. END OF PIPE HIGHER THAN OVERFLOW NOZZLE.
5. DELETED.
6. SUCTION AT AGITATING LEVEL.
7. FUTURE ORP MEASURMENT.
8. FUTURE PH MEASURMENT.

| TAG No. | A-90401 | R-90401 | T-90402 | P-90403 | P-90404 | H-90407 | P-90408 | P-90409 |
|---|---|---|---|---|---|---|---|---|
| Service | AGITATOR | REACTOR | OVERFLOW TANK | TRANSFER PUMP | DOSING PUMP | HEATER | PH LOOP PUMP | PH LOOP VESSEL |
| Fluid | | EFFLUENT WASTE WATER | EFFLUENT WASTE WATER | EFFLUENT WASTE WATER | NaOCl 11% | | EFFLUENT WATER | EFFLUENT WATER |
| Size | | 3 m³ | 2-3 m³ | 15 m³/h 30 mLc | 50 lit/h 2-2.5 bar | 200,000 kcal/h 1.6 m² BEU | 1/2" AIR DIAPH. | H=0.5 m D=0.2 m |
| Mat. of const. | SS | CS/SS/PE | CS/SS | CS/SS | PP/PVC | CS/SS | PP | SS/CS |
| Remarks | EX. PROOF MOTOR | | | | | | | |

| no. | description | date | by | |
|---|---|---|---|---|
| P1 | INTERLOCKS UPDATE | 15.02.17 | Danuta | N.R. |
| P0 | PRELIMINARY | 15.11.15 | Danuta | N.R. |

REVISIONS

| | by: | date: |
|---|---|---|
| design.: | K.F. | 15.11.15 |
| drawn: | Danuta | 15.11.15 |
| check.: | N.R. | 15.11.15 |
| appr.: | | |

title: ELCON-USA

title: UNIT 90 AMMONIA TREATMENT P & I DIAGRAM

proj. no: –

dwg. no: USA-90400-01-001B

comp. dwg. no: USA-90400-01-001B

issue: P1

:\D\:Y DD\:Y\PI&D\PRELIMINARY\LAST VERSIONS (ALL UNITS)\UNIT 90\USA-90400-01-001B_P1.dwg, 19/02/2017 12:23:05

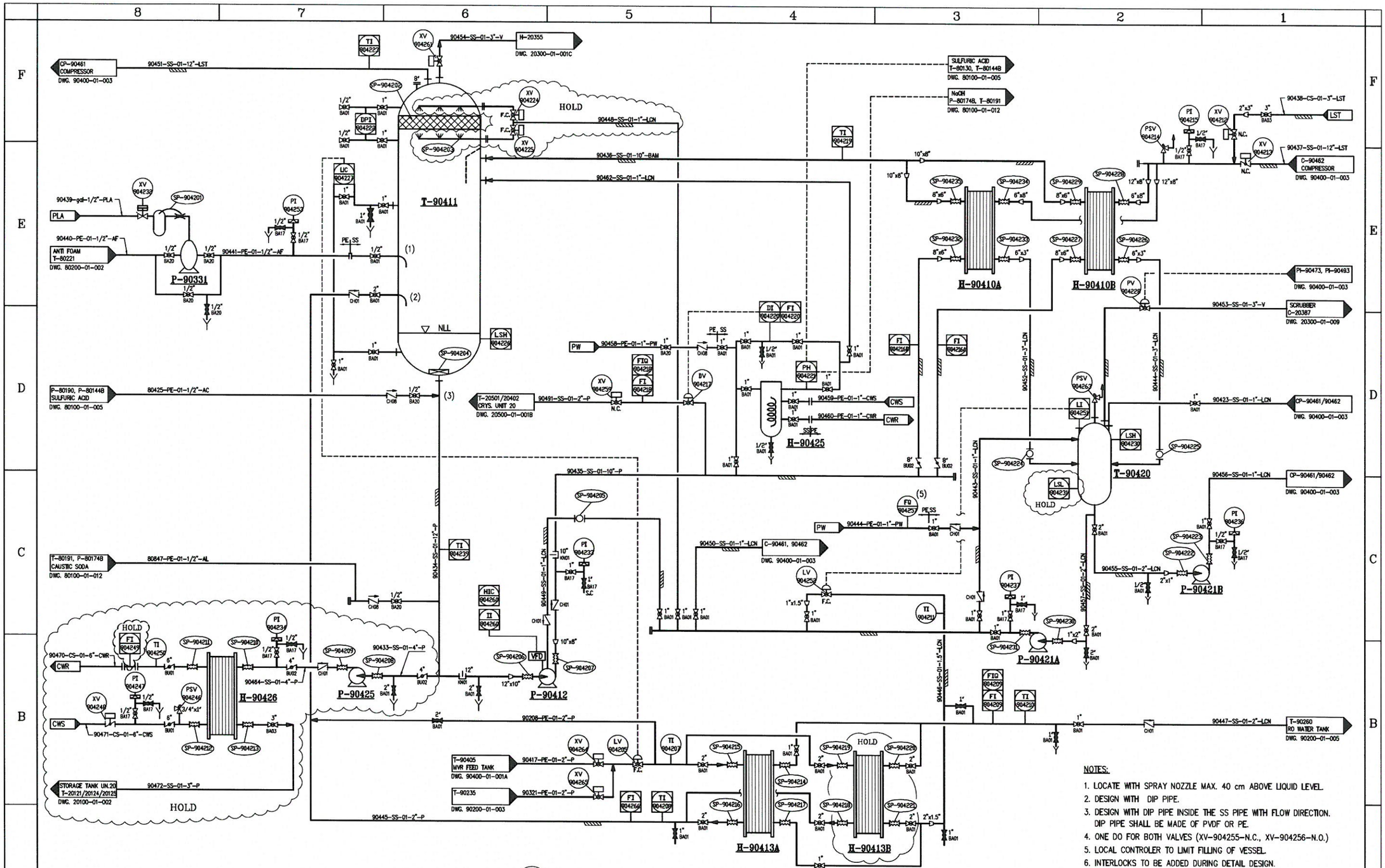


NOTES:

1. LOCATE WITH SPRAY NOZZLE MAX. 40 cm ABOVE LIQUID LEVEL.
2. DESIGN WITH DIP PIPE.
3. DESIGN WITH DIP PIPE INSIDE THE SS PIPE WITH FLOW DIRECTION. DIP PIPE SHALL BE MADE OF PVDF OR PE.
4. ONE DO FOR BOTH VALVES (XV-904255-N.C., XV-904256-N.O.)
5. LOCAL CONTROLER TO LIMIT FILLING OF VESSEL.
6. INTERLOCKS TO BE ADDED DURING DETAIL DESIGN.

| TAG No. | H-90410A/B | T-90411 | P-90412 | H-90413 A/B | T-90420 | P-90421A | P-90421B | P-90425 | H-90426 (HOLD) | P-90331 |
|---|---|---|---|---|---|---|---|---|---|---|
| Service | FORCED CIRCULATION EVAPORATOR | FLASH CHAMBER | CIRCULATION PUMP | MVR FEED HEATER | CONDENSATE TANK | CONDENSATE PUMP | COMPRESSORS SATURATION | PUMP TO MVR COOLER | MVR COOLER | ANTIFOAM METERING PUMP |
| Fluid | 25% BRINE | 25% BRINE | 20% BRINE | DILUTE BRINE | DISTILLATE | WATER | WATER | 20% BRINE | 20% BRINE | ANTI FOAM |
| Size | $1.5x10^6$ kCal/h EACH 37 m2 | 10 m3 | 500-750 m3/h, 30-40 mLc | 250000 kCal/h, 4 m2 | 900 lit | 4 m3/h, 50 m | 0.5-1 m3/h, 30 m | 100 m3/h, 20 mLc | $2.5x10^6$ kCal/h | 1/4" AIR DIAPH. 20 l/h |
| Mat. of const. | SS316 | SS316 | SS/Ti | SS316 | SS316 | SS316 | SS316 | SS | SS/EPDM | PP |
| Remarks | EXIST. H-1410 H-1420 | EXIST. P-1411 | EXIST. T-1402 | ONE EXIST. H-1440 ONE NEW | EXIST. P-1420 | EXIST. P-1450 | EXIST. P-1457 | NEW | PLATES | EXIST. P-1404 |

PRELIMINARY

| no. | description | date | by | app. |
|---|---|---|---|---|
| P1 | INTERLOCKS UPDATE | 15.02.17 | Danuta | N.R. |
| P0 | PRELIMINARY | 06.12.15 | Danuta | N.R. |

REVISIONS

| | by: | date: |
|---|---|---|
| design.: | K.F. | 06.12.15 |
| drawn: | Danuta | 06.12.15 |
| check.: | N.R. | 06.12.15 |
| appr.: | | |

title: ELCON-USA

title: UNIT 90 MVR P & I DIAGRAM

proj. no: –
dwg. no: USA-90400-01-002
comp. dwg. no: USA-90400-01-002
issue: P1

:\D\:Y DD\:Y\PI&D\PRELIMINARY\LAST VERSIONS (ALL UNITS)\UNIT 90\USA-90400-01-002_P1.dwg, 19/02/2017 13:32:38

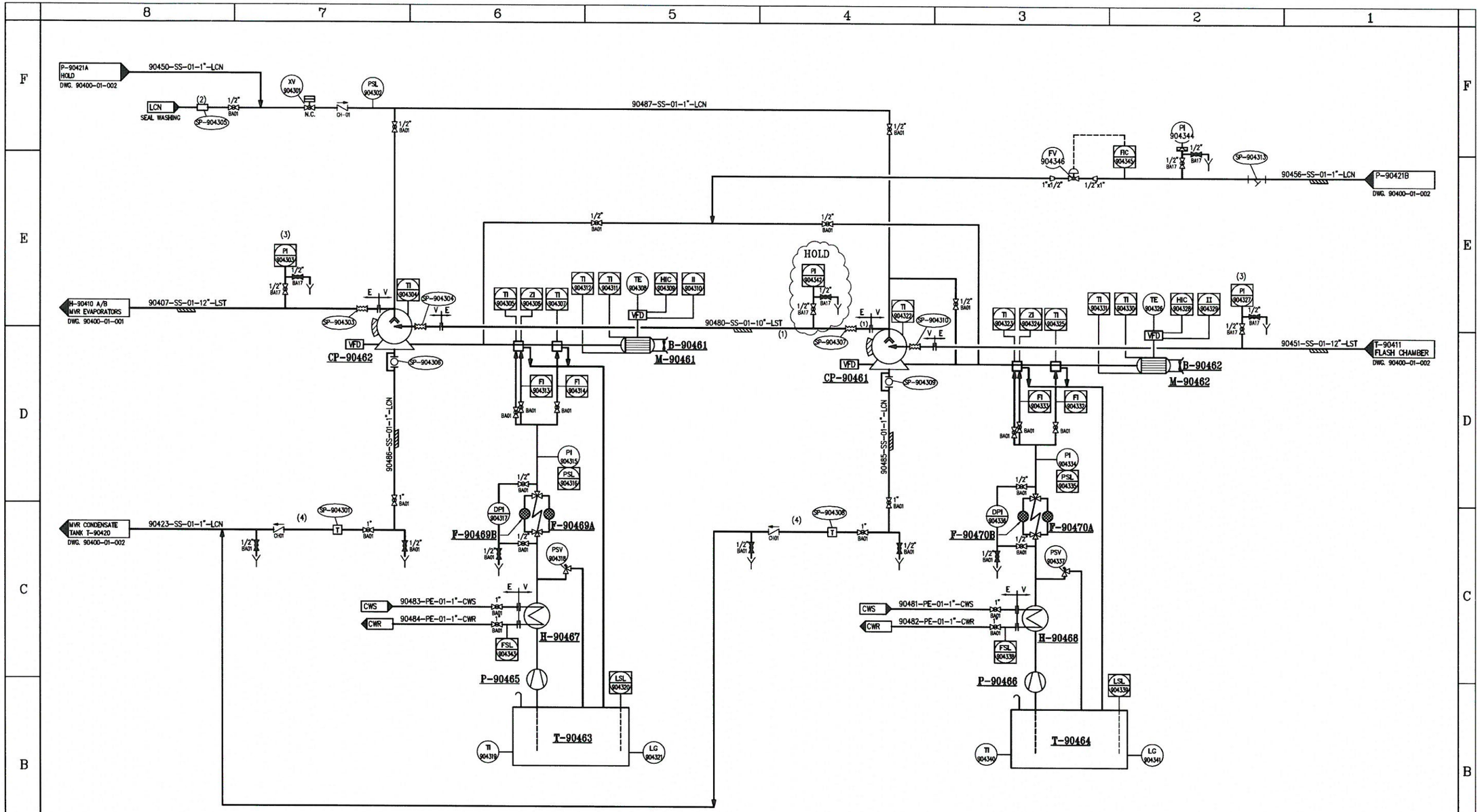


NOTES:

1. TO BE DESIGNED ACCORDING TO THE EXIST LAYOUT IN DESHANIM.
2. REDUCED PRESSURE ZONE BACK FLOW PREVENTER
3. ΔP IN SOFTWARE SHALL BE CALCULATED ACCORDING TO THE FORMULA: ΔP (504243=PI(504503)-PI(504227))
4. FILTERS INCLUDED IN THE STEAM.
6. INTERLOCKS TO BE ADDED DURING DETAIL DESIGN.

PRELIMINARY

| TAG No. | B-90461 | CP-90461 | B-90462 | CP-90462 | T-90463 | T-90464 | H-90465 | H-90466 | H-90467 | H-90468 | F-90469 A/B | F-90470 A/B |
|---|---|---|---|---|---|---|---|---|---|---|---|---|
| Service | CP-90461 MOTOR COOLING FAN | MVR COMPRESSOR | CP-90462 MOTOR COOLING FAN | MVR COMPRESSOR | CP-90461 OIL TANK | CP-90462 OIL TANK | CP-90461 COMPRESSORS OIL CIRCULATION PUMP | CP-90462 COMPRESSORS OIL CIRCULATION PUMP | CP-90461 HEAT EX. COOLING OIL | CP-90462 HEAT EX. COOLING OIL | DOUBLE FILTER | DOUBLE FILTER |
| Fluid | AIR | LOW PRESSURE STEAM | AIR | J.P. STEAM | LUBRICATION OIL | LUBRICATION OIL | LUBRICATION OIL | LUBRICATION OIL | LUBRICATION OIL | LUBRICATION OIL | | |
| Size | 0.75 kW | 15 t/h, 350 hP | 0.75 kW | 15 t/h, 350 hP | 50 lit | 50 lit | 2.7 lit/h, 6 barg | 2.7 lit/h, 6 barg | 1.74 m³, 1.44 kW S&T | 1.74 m³, 1.44 kW S&T | 10 µm | 10 µm |
| Mat. of const. | | SS | | SS | CS | CS | CS | CS | SS/AL | SS/AL | CS | CS |
| Remarks | | | | | | | | | | | | |

| no. | description | date | by | op. |
|---|---|---|---|---|
| P1 | INTERLOCKS UPDATE | 15.02.17 | Danuta | N.R. |
| P0 | PRELIMINARY | 06.12.15 | Danuta | N.R. |

REVISIONS

| | by: | date: |
|---|---|---|
| design.: | K.F. | 06.12.15 |
| drawn.: | Danuta | 06.12.15 |
| check.: | N.R. | 06.12.15 |
| appr.: | | |

title: ELCON-USA

title: UNIT 90 MVR COMPRESSORS P & I DIAGRAM

proj. no:

dwg. no: USA-90400-01-003

comp. dwg. no: USA-90400-01-003

issue: P1

elcon recycling center

:\מ\:Y מ\:Y\PI&D\PRELIMINARY\LAST VERSIONS (ALL UNITS)\UNIT 90\USA-90400-01-003 P1.dwg, 19/02/2017 13:45:08

I 90101 ON LI-901101 HIGH HIGH OR LSH-901103, CLOSE ALL VALVES TO T-90120

I 90202 ON LI-902117 HIGH HIGH OR LSH-902101, CLOSE ALL VALVES TO T-90204

I 90203 ON LI-902118 HIGH HIGH OR LSH-902104, CLOSE ALL VALVES TO T-90206

I 90204 IF FI-902127 LESS THAN MINIMUM FLOW, CLOSE P-90201

I 90205 ON FI-902125 LOW LOW, CLOSE TV-902124

I 90206 ON FSL-902153, CLOSE TV-902154

I 90207 ON FSL-902157A-G OR FI-902155 LOW, CLOSE XV-902113 AND OPEN XV-902114

I 90208 ON LI-902128 HIGH, CLOSE XV-902113 AND OPEN XV-902114

I 90209 ON PI-902177 HIGH HIGH, OPEN XV-902173 AND CLOSE XV-902170

I 90210 ON LI-902175 LOW, CLOSE XV-902113 AND OPEN XV-902114

I 90211 ON LSH-902208, CLOSE XV-902110 AND XV-902109

I 90212 ON LSH-90212, CLOSE XV-902110 AND XV-902109

I 90213 ON LSH-902301, CLOSE XV-902110 AND XV-902109

I 90214 ON LSH-902310 OR LI-902305 HIGH HIGH, CLOSE XV-902110 AND XV-902109

I 90215 ON PROBLEM IN UF SYSTEM INCLUDING TANKS ACC. TO VENDOR RECOMENDATION, CLOSE P-90234

I 90216 ON LSH-902408 OR LI-902407 HIGH HIGH, CLOSE UF SYSTEM

I 90217 ON PROBLEM IN NF SYSTEM INCLUDING TANKS ACC. TO VENDOR RECOMENDATION, CLOSE P-90242

I 90218 ON PROBLEM IN RO SYSTEM INCLUDING TANKS ACC. TO VENDOR RECOMENDATION, CLOSE P-90242

I 90219 ON LSH-902503 OR LI-902502 HIGH HIGH, CLOSE RO SYSTEM AND MVR SYSTEM

I 90220 ON LI-904102 HIGH, CLOSE UNIT 12

I 90221 ON LI-904102 HIGH HIGH OR LSH-904101, CLOSE RO SYSTEM AND BLEEDS FROM COOLING TOWERS AND WHB

I 90222 ON AI-904105, CLOSE P-90121A

I 90223 ON LSH-904104, CLOSE P-90121A

PRELIMINARY

| no. | description | date | by | app. |
|---|---|---|---|---|
| P0 | PRELIMINARY | 15.02.17 | Danuta | N.R. |

REVISIONS

| | by: | date: |
|---|---|---|
| design.: | K.F. | 15.02.17 |
| drawn: | Danuta | 15.02.17 |
| check.: | N.R. | 15.02.17 |
| appr.: | | |

title: ELCON-USA

title: UNIT 90 WATER TREATMENT INTERLOCKS LIST

elcon water tech

| proj. no | dwg. no | issue |
|---|---|---|
| – | USA-90000-01-030 | P0 |

comp. dwg. no: USA-90000-01-030

:\D\:Y DG\:Y\PI&D\PRELIMINARY\LAST VERSIONS (ALL UNITS)\UNIT 90\USA-90000-01-030_P0.dwg, 19/02/2017 12:03:58

APPENDIX D-8

PRELIMINARY PROCESS FLOW DIAGRAMS

NOTE: Sizes on these diagrams are preliminary. See Tables D-1 and D-6

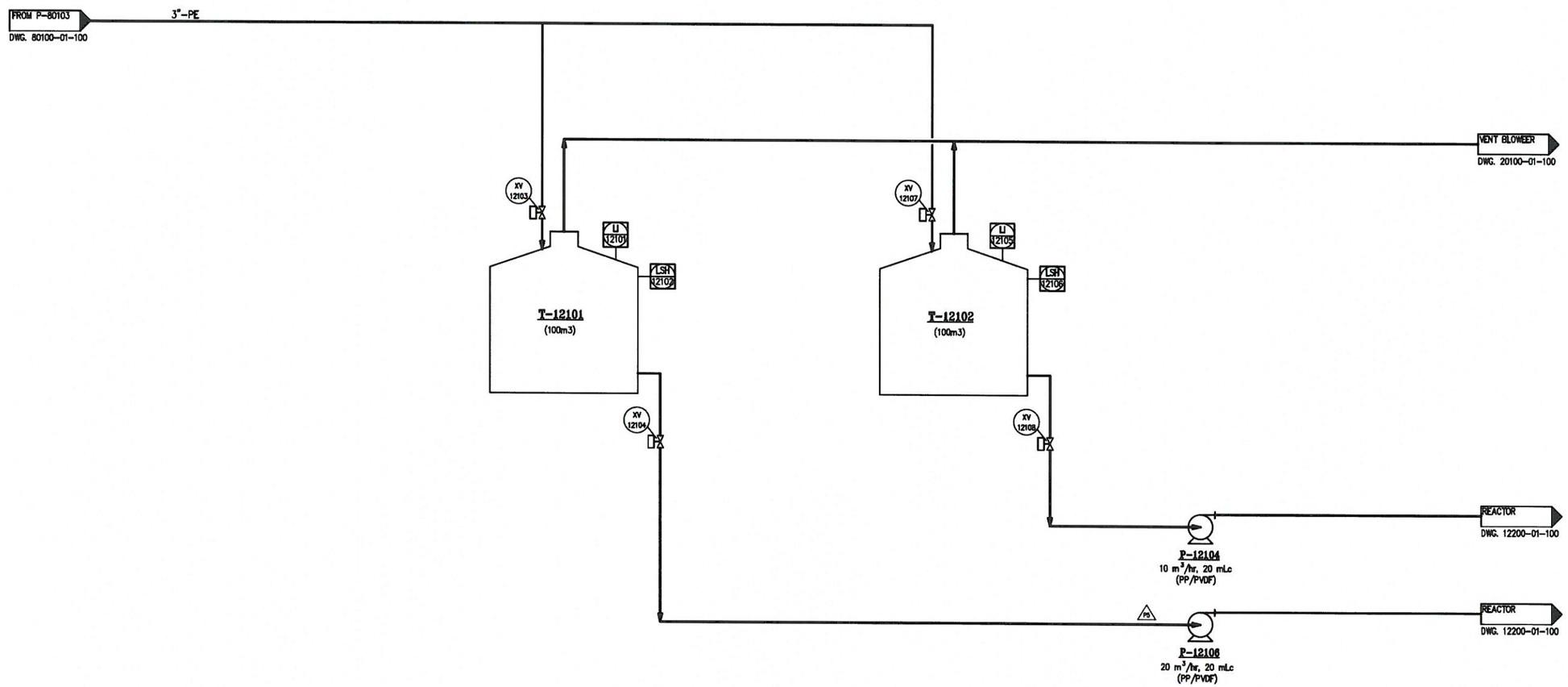


| no. | description | date | by |
|---|---|---|---|
| P5 | UPDATED | 29.10.15 | N.R. |
| P3 | UPDATED | 14.01.15 | N.R. |
| P2 | UPDATED | 23.12.14 | N.R. |
| P1 | UPDATED AS NOTED | 09.12.14 | N.R. |
| P0 | FOR COMMENTS | 19.11.13. | N.R. |

REVISIONS

| | by | date |
|---|---|---|
| design.: | N.R. | 19.11.13. |
| drawn: | F.K. | 19.11.13. |
| check.: | | |
| appr.: | | |

elcon

title: NEW PLANT

title: UNIT 12 (SPCP) – STORAGE TANKS
DIAGRAM OF PIPING INSTRUMENTATION AND PROCESS FLOW

proj. no
dwg. no: USA-12100-01-100
comp. dwg. no: USA-12100-01-100(PFD)
issue: P5

Y:\מגמ\Y\PFD\PFD-USA-REV_P5\USA-12100-01-100(PFD)_P5.dwg, 29/10/2015 14:04:48

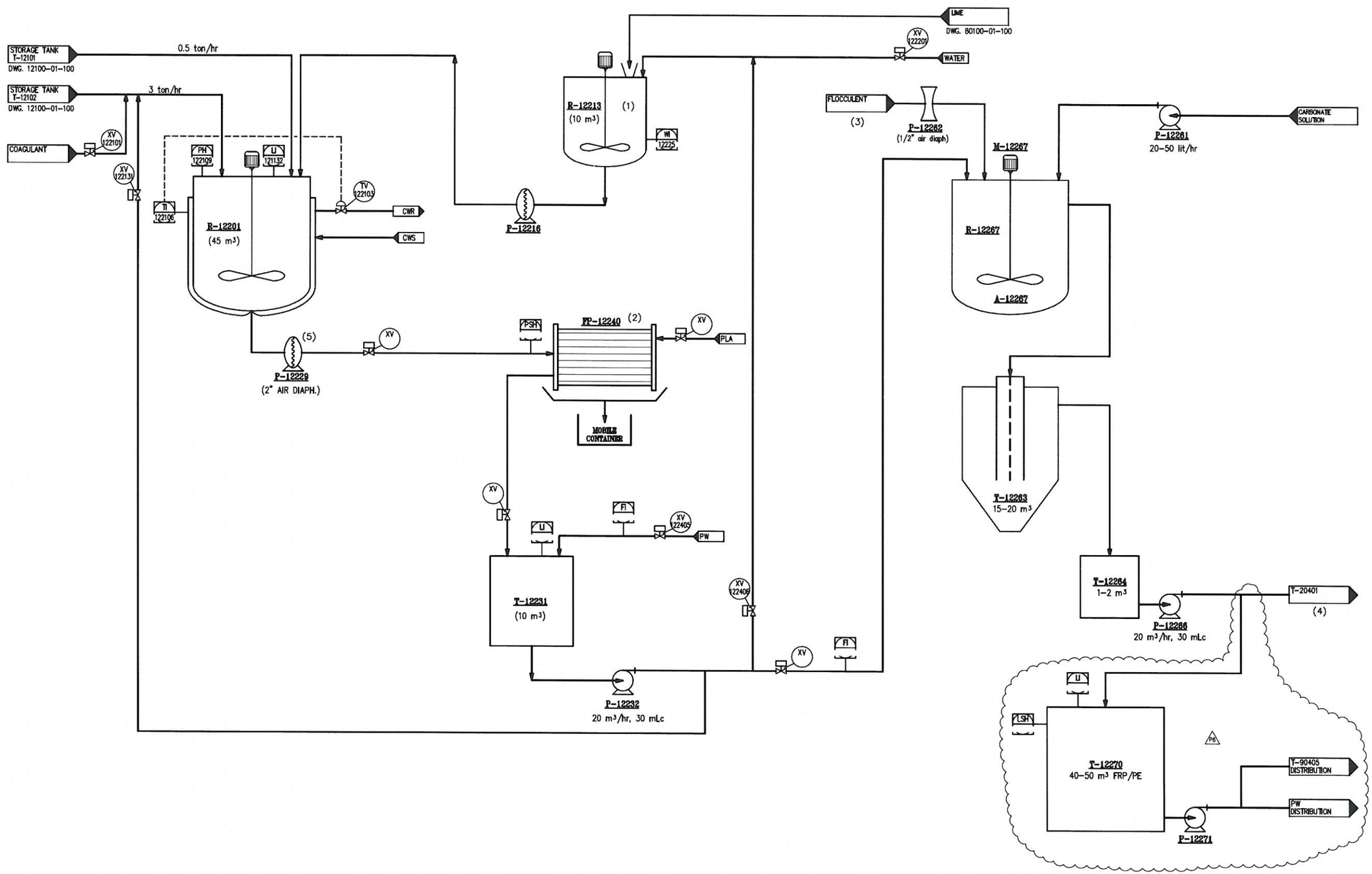


NOTES:

(1) OPTION FOR T-12215 LIME STORAGE VESSEL.
(2) OPTION CHANGE F.P. TO CENTRIFUGE.
(3) DEDICATED FLOCULANT.
(4) OPTION – PW TO PLANT, IF DECIDED, EXTRA STORAGE VESSEL T-12270, 30 m3.
(5) OPTION EXTRA BUFFER TANK, AGITATEDVESSEL, 40–50 m3, T-12230.

| no. | description | date | by |
|---|---|---|---|
| P6 | UPDATED AS NOTED | 15.02.17 | N.R. |
| P5 | UPDATED | 29.10.15 | N.R. |
| P3 | UPDATED | 14.01.15 | N.R. |
| P2 | UPDATED | 23.12.14 | N.R. |
| P1 | UPDATED AS NOTED | 09.12.14 | N.R. |
| P0 | FOR COMMENTS | 19.11.13 | N.R. |

REVISIONS

| | by | date |
|---|---|---|
| design.: | N.R. | 19.11.13. |
| drawn: | F.K. | 19.11.13. |
| check.: | | |
| appr.: | | |

elcon

title: NEW PLANT

title: UNIT 12 (SPCP) – REACTION
DIAGRAM OF PIPING INSTRUMENTATION AND PROCESS FLOW

proj. no: | dwg. no: USA-12200-01-100 | issue: P6

comp. dwg. no: USA-12200-01-100(PFD)

:\מ\:Y מפ\:Y\PFD\LAST VERSIONS (ALL UNITS)\UNIT 12\USA-12200-01-100(PFD) P6.dwg, 15/02/2017 10:24:23

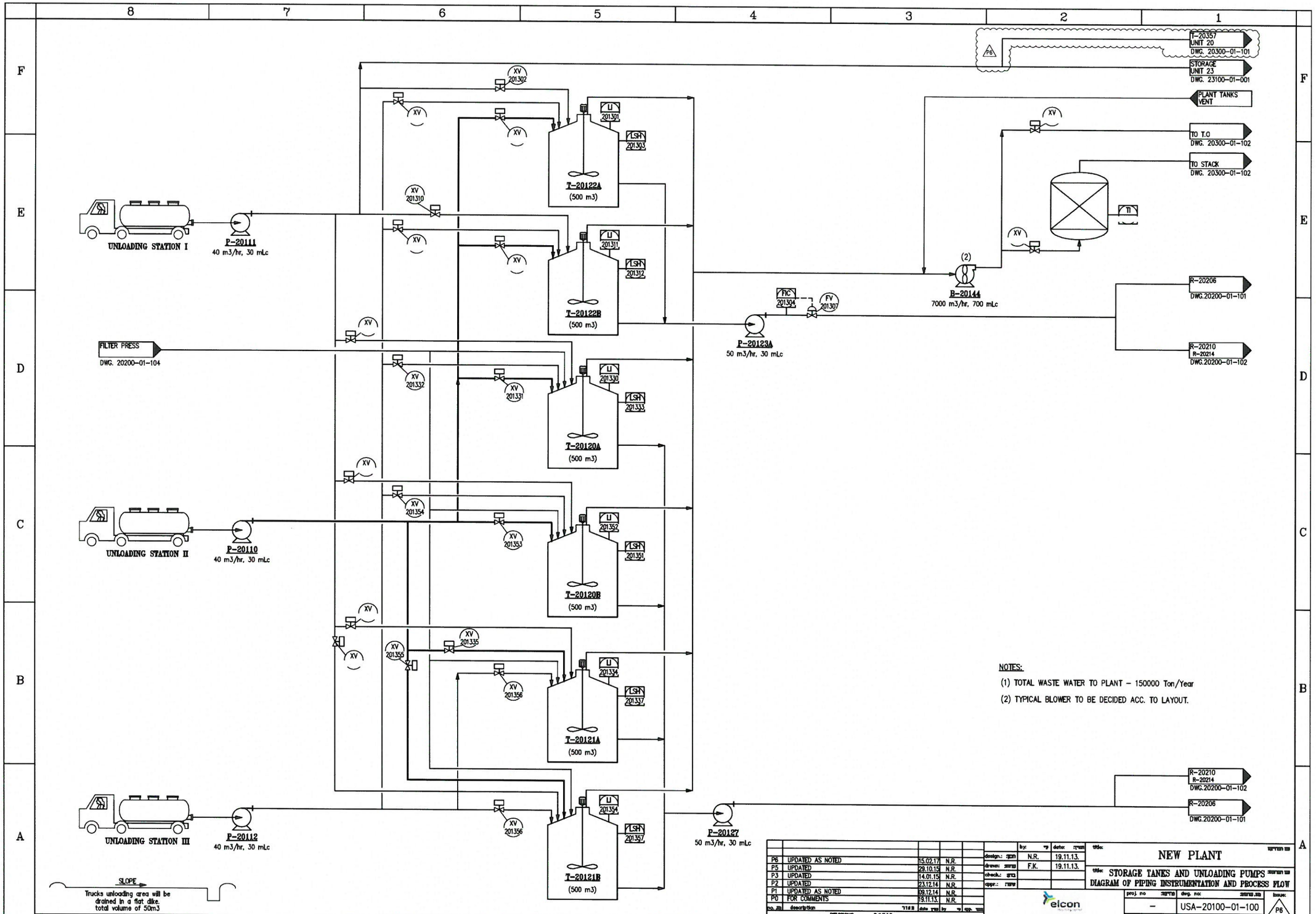


NOTES:

(1) TOTAL WASTE WATER TO PLANT – 150000 Ton/Year

(2) TYPICAL BLOWER TO BE DECIDED ACC. TO LAYOUT.

| no. | description | date | by |
|---|---|---|---|
| P6 | UPDATED AS NOTED | 15.02.17 | N.R. |
| P5 | UPDATED | 29.10.15 | N.R. |
| P3 | UPDATED | 14.01.15 | N.R. |
| P2 | UPDATED | 23.12.14 | N.R. |
| P1 | UPDATED AS NOTED | 09.12.14 | N.R. |
| P0 | FOR COMMENTS | 19.11.13. | N.R. |

REVISIONS

| | by: | date: |
|---|---|---|
| design.: | N.R. | 19.11.13. |
| drawn: | F.K. | 19.11.13. |
| check.: | | |
| appr.: | | |

title: NEW PLANT

title: STORAGE TANKS AND UNLOADING PUMPS DIAGRAM OF PIPING INSTRUMENTATION AND PROCESS FLOW

proj. no: –

dwg. no: USA-20100-01-100

comp. dwg. no: USA-20100-01-100(PFD)

issue: P6

elcon

Y:\מפ\:Y\PFD\LAST VERSIONS (ALL UNITS)\UNIT 20\USA-20100-01-100(PFD) P6.dwg, 15/02/2017 11:31:20

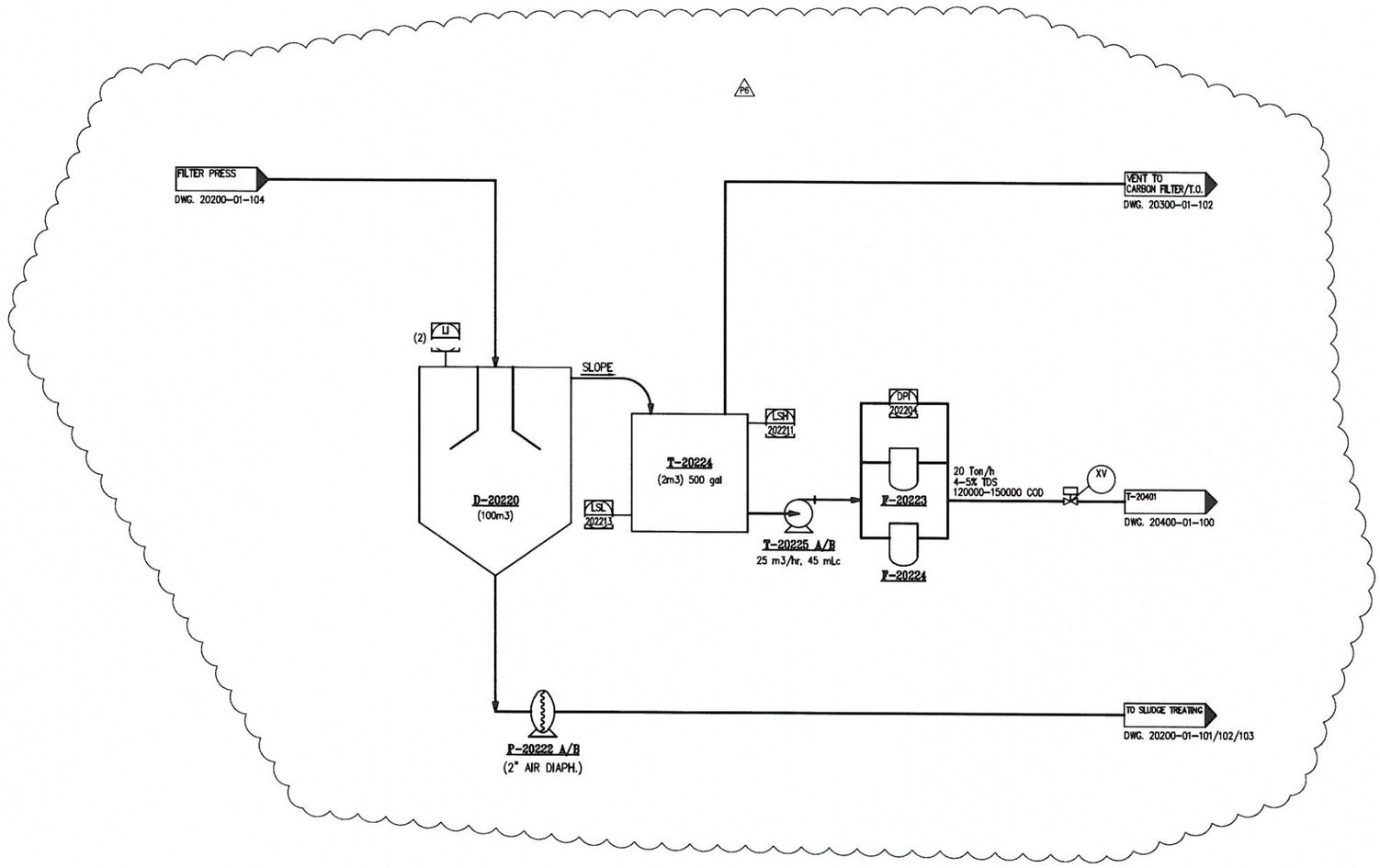


NOTES:

(1) 20% OF THE FLOW TO THE REACTORS.

(2) SLUDGE LEVEL

| no. | description | date | by |
|---|---|---|---|
| P6 | HOLD DELETED | 15.02.17 | N.R. |
| P5 | UPDATED | 29.10.15 | N.R. |
| P3 | UPDATED | 14.01.15 | N.R. |
| P2 | UPDATED | 23.12.14 | N.R. |
| P1 | UPDATED AS NOTED | 09.12.14 | N.R. |
| P0 | FOR COMMENTS | 19.11.13 | N.R. |

REVISIONS

| | by: | date: |
|---|---|---|
| design.: | N.R. | 19.11.13. |
| drawn: | F.K. | 19.11.13 |
| check.: | | |
| appr.: | | |

elcon

title: NEW PLANT

title: PRETREATMENT SECTION
DIAGRAM OF PIPING INSTRUMENTATION AND PROCESS FLOW

proj. no: –

dwg. no: USA-20200-01-100

comp. dwg. no: USA-20200-01-100(PFD)

issue: P6

Y:\מפ\:Y:\PFD\LAST VERSIONS (ALL UNITS)\UNIT 20\USA-20200-01-100(PFD) P6.dwg, 15/02/2017 11:32:43

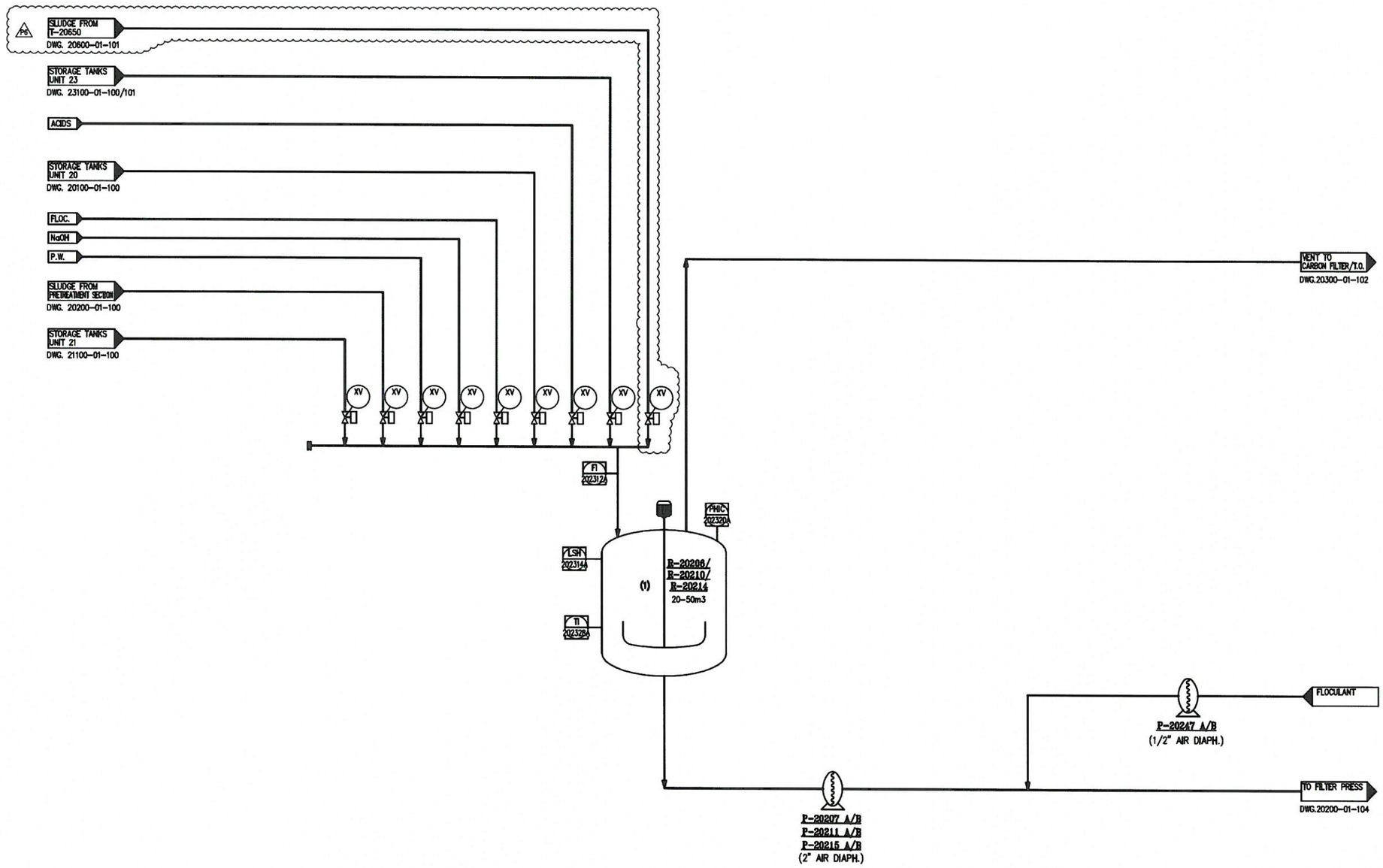


NOTES:

(1) BATCH REACTOR

| no. | description | date | by |
|---|---|---|---|
| P6 | UPDATED AS NOTED | 15.02.17 | N.R. |
| P5 | UPDATED | 29.10.15 | N.R. |
| P3 | UPDATED | 14.01.15 | N.R. |
| P2 | UPDATED | 23.12.14 | N.R. |
| P1 | UPDATED AS NOTED | 09.12.14 | N.R. |
| P0 | FOR COMMENTS | 19.11.13. | N.R. |

REVISIONS

| | by | date |
|---|---|---|
| design.: | N.R. | 19.11.13. |
| drawn: | F.K. | 19.11.13. |
| check.: | | |
| appr.: | | |

title: NEW PLANT

title: SLUDGE PRETREATMENT R-20206
DIAGRAM OF PIPING INSTRUMENTATION AND PROCESS FLOW

elcon

proj. no: –
dwg. no: USA-20200-01-101
comp. dwg. no: USA-20200-01-101(PFD)
issue: P6

Y:\מפ\:Y:\PFD\LAST VERSIONS (ALL UNITS)\UNIT 20\USA-20200-01-101(PFD) P6.dwg, 15/02/2017 11:35:17

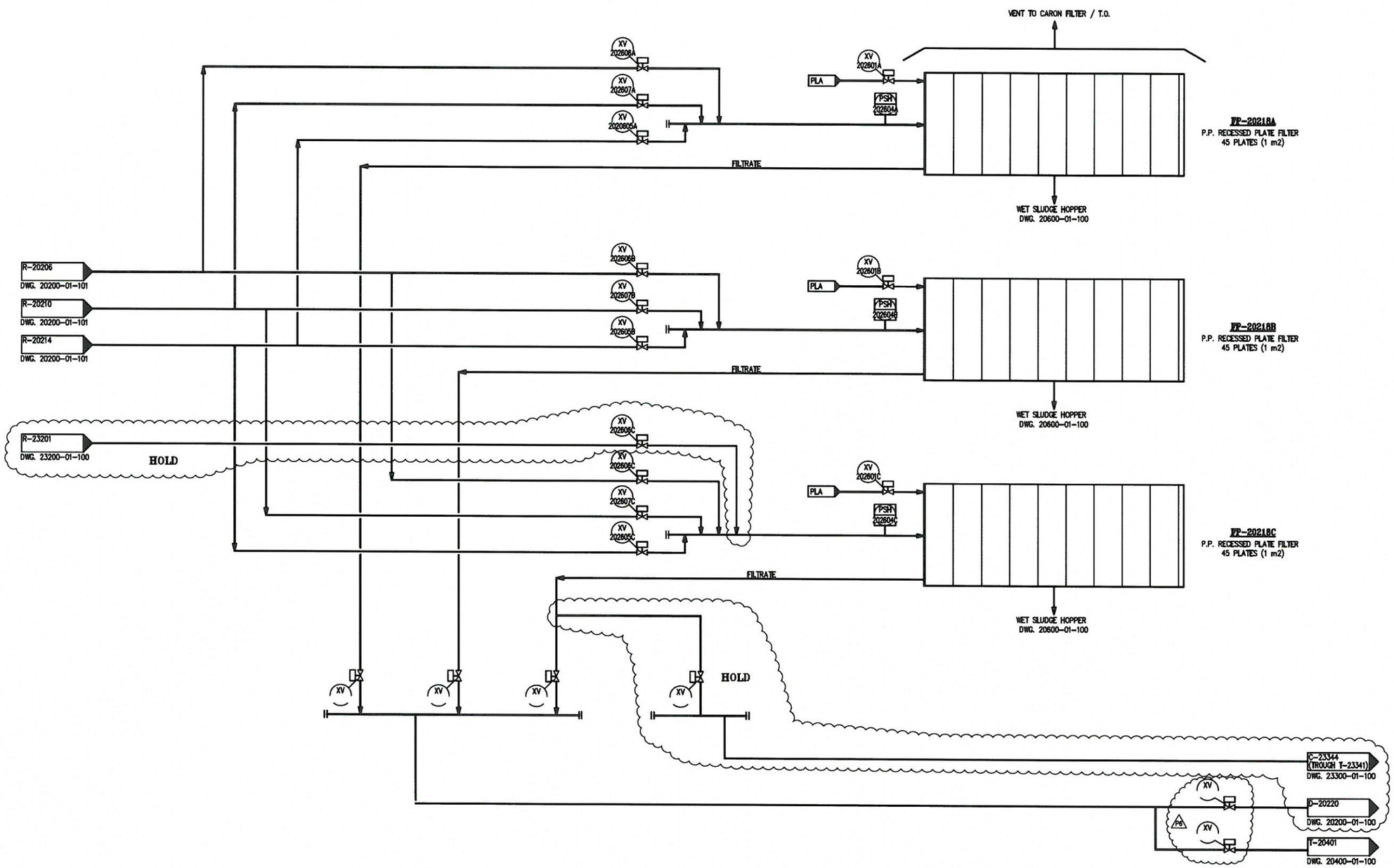


| no. | description | date | by |
|---|---|---|---|
| P6 | UPDATED AS NOTED | 15.02.17 | N.R. |
| P5 | UPDATED | 29.10.15 | N.R. |
| P3 | UPDATED | 14.01.15 | N.R. |
| P2 | UPDATED | 23.12.14 | N.R. |
| P1 | UPDATED AS NOTED | 09.12.14 | N.R. |
| P0 | FOR COMMENTS | 19.11.13. | N.R. |

REVISIONS

| | by | date |
|---|---|---|
| designr. | N.R. | 19.11.13. |
| drawn. | F.K. | 19.11.13. |
| check. | | |
| appr. | | |

title: NEW PLANT

title: SLUDGE FILTRATION

DIAGRAM OF PIPING INSTRUMENTATION AND PROCESS FLOW

elcon

proj. no: –

dwg. no: USA-20200-01-104

comp. dwg. no: USA-20200-01-104(PFD)

issue: P6

:\מפ\:Y\PFD\LAST VERSIONS (ALL UNITS)\UNIT 20\USA-20200-01-104(PFD) P6.dwg, 15/02/2017 11:34:29

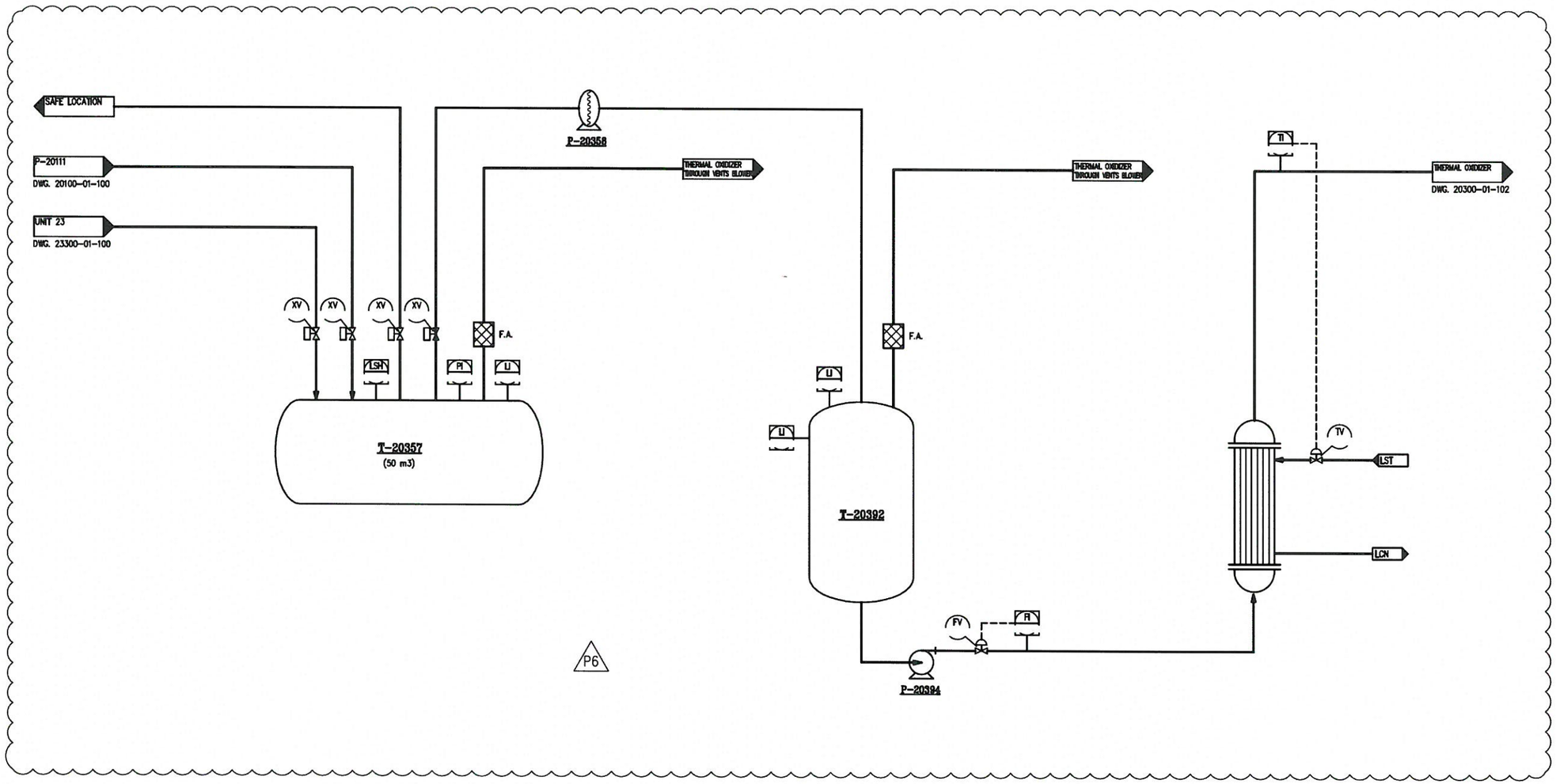


| no. | description | date | by |
|---|---|---|---|
| P6 | UPDATED AS NOTED | 15.02.17 | N.R. |
| P5 | UPDATED | 29.10.15 | N.R. |
| P3 | UPDATED | 23.12.14 | N.R. |
| P2 | UPDATED AS NOTED | 08.12.14 | N.R. |
| P1 | FOR COMMENTS | 25.02.14 | N.R. |
| P0 | FOR COMMENTS | 19.11.13. | N.R. |

REVISIONS

| | by | date |
|---|---|---|
| design.: | N.R. | 19.11.13. |
| drawn: | F.K. | 19.11.13. |
| check.: | | |
| appr.: | | |

title: NEW PLANT

title: ORGANIC WASTE TO T.O.
DIAGRAM OF PIPING INSTRUMENTATION AND PROCESS FLOW

elcon

proj. no: –
dwg. no: USA-20300-01-101
issue: P6
comp. dwg. no: USA-20300-01-101(PFD)

:\מ\:Y מפ\:Y\PFD\LAST VERSIONS (ALL UNITS)\UNIT 20\USA-20300-01-101(PFD) P6.dwg, 16/02/2017 14:31:57

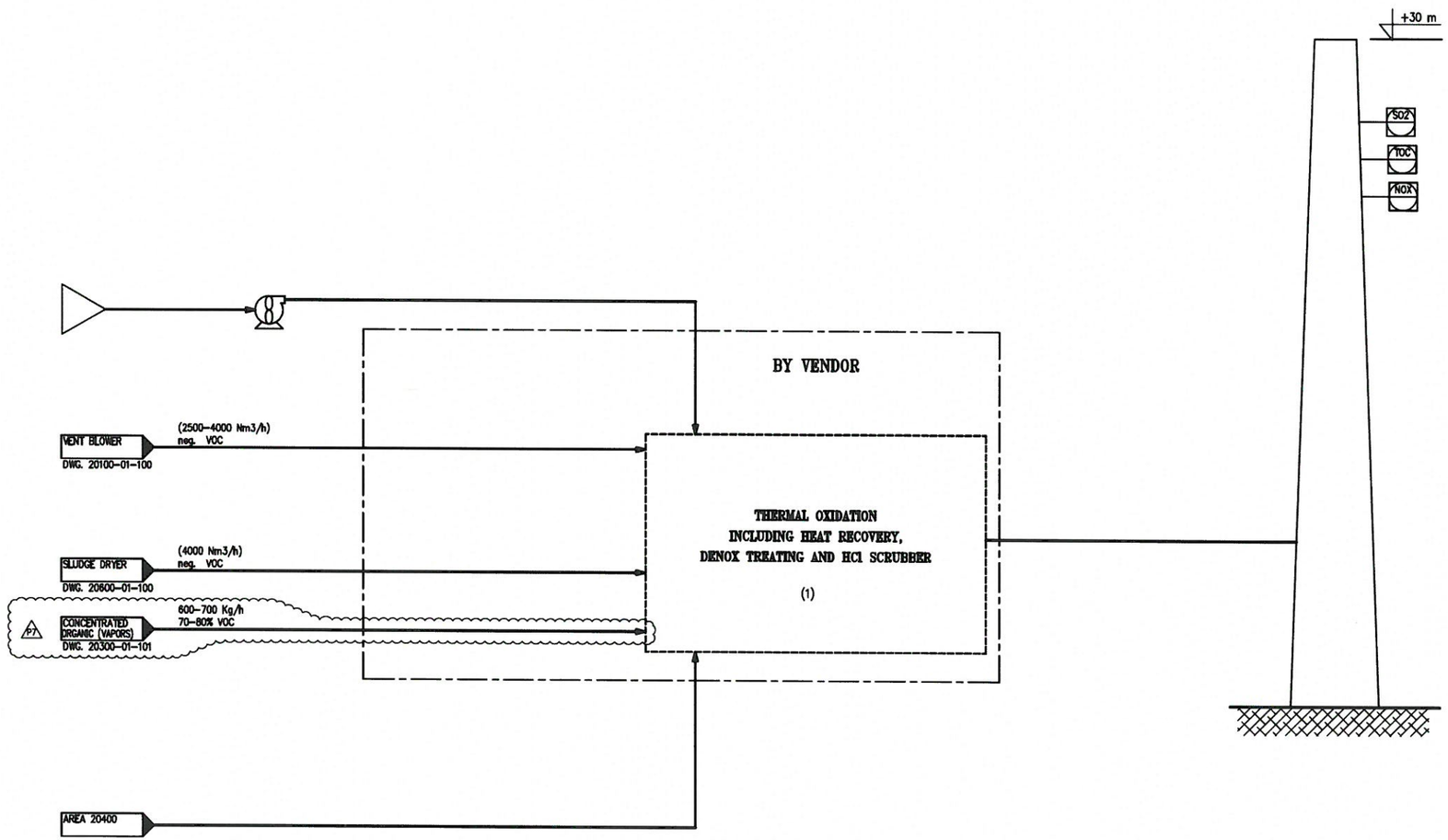


NOTE:

(1) STACK SCRUBBER C-20387
DEAERATOR T-60150

| no. | description | date | by | ap. |
|---|---|---|---|---|
| P7 | ORGANIC WASTE UPDATED | 15.02.17 | N.R. | |
| P6 | UPDATED | 16.11.15 | N.R. | |
| P5 | UPDATED | 29.10.15 | N.R. | |
| P3 | UPDATED | 23.12.14 | N.R. | |
| P2 | UPDATED AS NOTED | 09.12.14 | N.R. | |
| P1 | FOR COMMENTS | 25.02.14 | N.R. | |
| P0 | FOR COMMENTS | 19.11.13 | N.R. | |

REVISIONS

| | by | date |
|---|---|---|
| design.: | N.R. | 19.11.13. |
| drawn: | F.K. | 19.11.13. |
| check.: | | |
| appr.: | | |

elcon

title: NEW PLANT

title: THERMAL OXIDATION
DIAGRAM OF PIPING INSTRUMENTATION AND PROCESS FLOW

proj. no: –
dwg. no: USA-20300-01-102
comp. dwg. no: USA-20300-01-102(PFD)
issue: P7

:\מג\:Y מפ\:Y\PFD\LAST VERSIONS (ALL UNITS)\UNIT 20\USA-20300-01-102(PFD) P7.dwg, 15/02/2017 14:00:35

CONFIDENTIAL BUSINESS INFORMATION

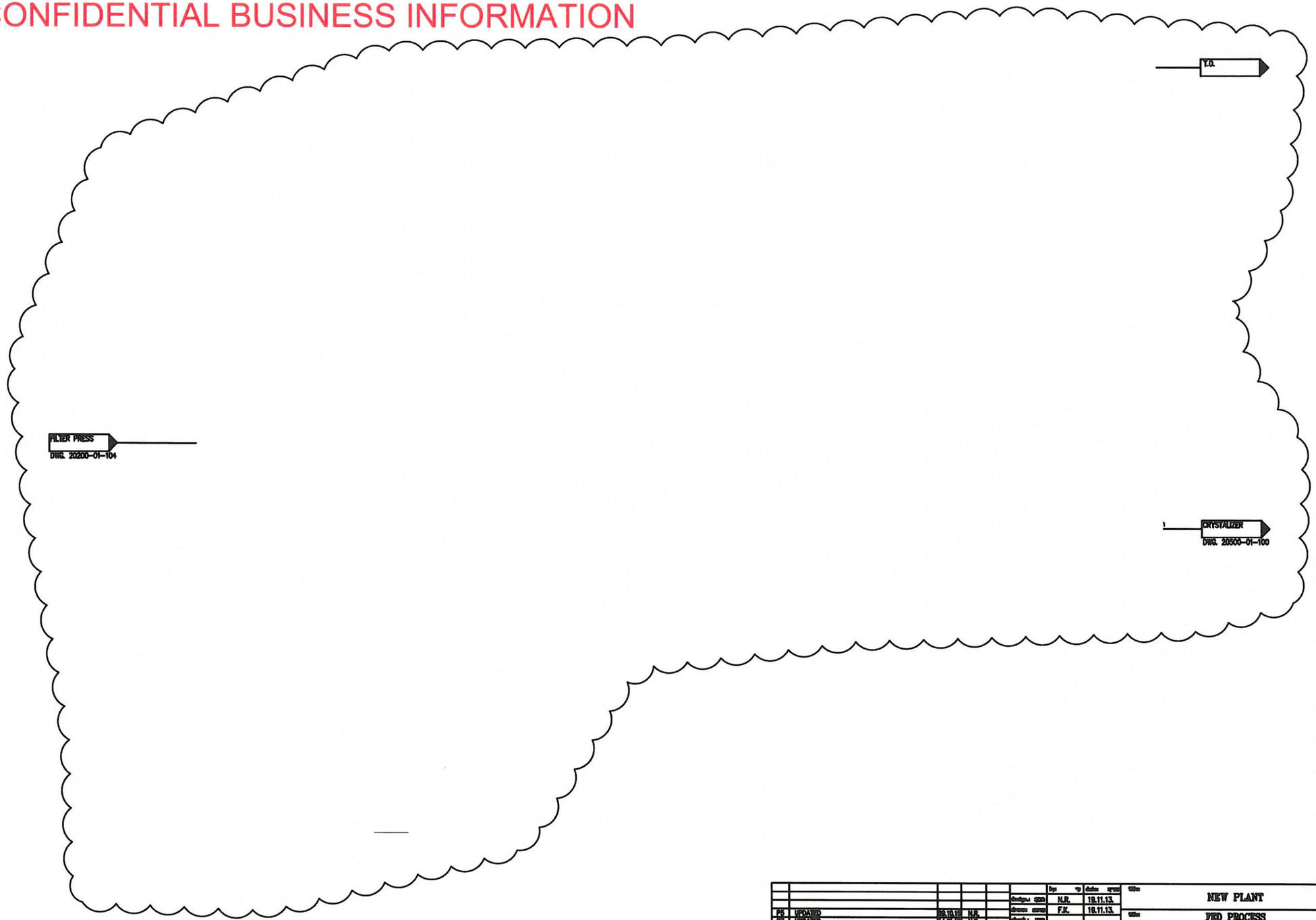


| | | | |
|---|---|---|---|
| P5 | UPDATED | 09.10.15 | N.R. |
| P3 | UPDATED | 14.01.15 | N.R. |
| P2 | UPDATED | 04.12.14 | N.R. |
| P1 | UPDATED AS NOTED | 08.12.14 | N.R. |
| P0 | FOR COMMENTS | 18.11.13 | N.R. |

REVISIONS

| | by | date |
|---|---|---|
| Designed | N.R. | 18.11.13. |
| Drawn | F.K. | 18.11.13. |
| Checked | | |
| Approved | | |

elcon

Title: NEW PLANT

Title: PFD PROCESS
DIAGRAM OF PIPING INSTRUMENTATION AND PROCESS FLOW

Proj. no: –
Dwg. no: USA-20400-01-100
Revision: P5

USA-20400-01-100(PFD)

\:Y 9\:Y\PFD\PFD-USA-REV_P5\USA-20400-01-100(PFD)_P5.dwg, 05/11/2015 08:34:59

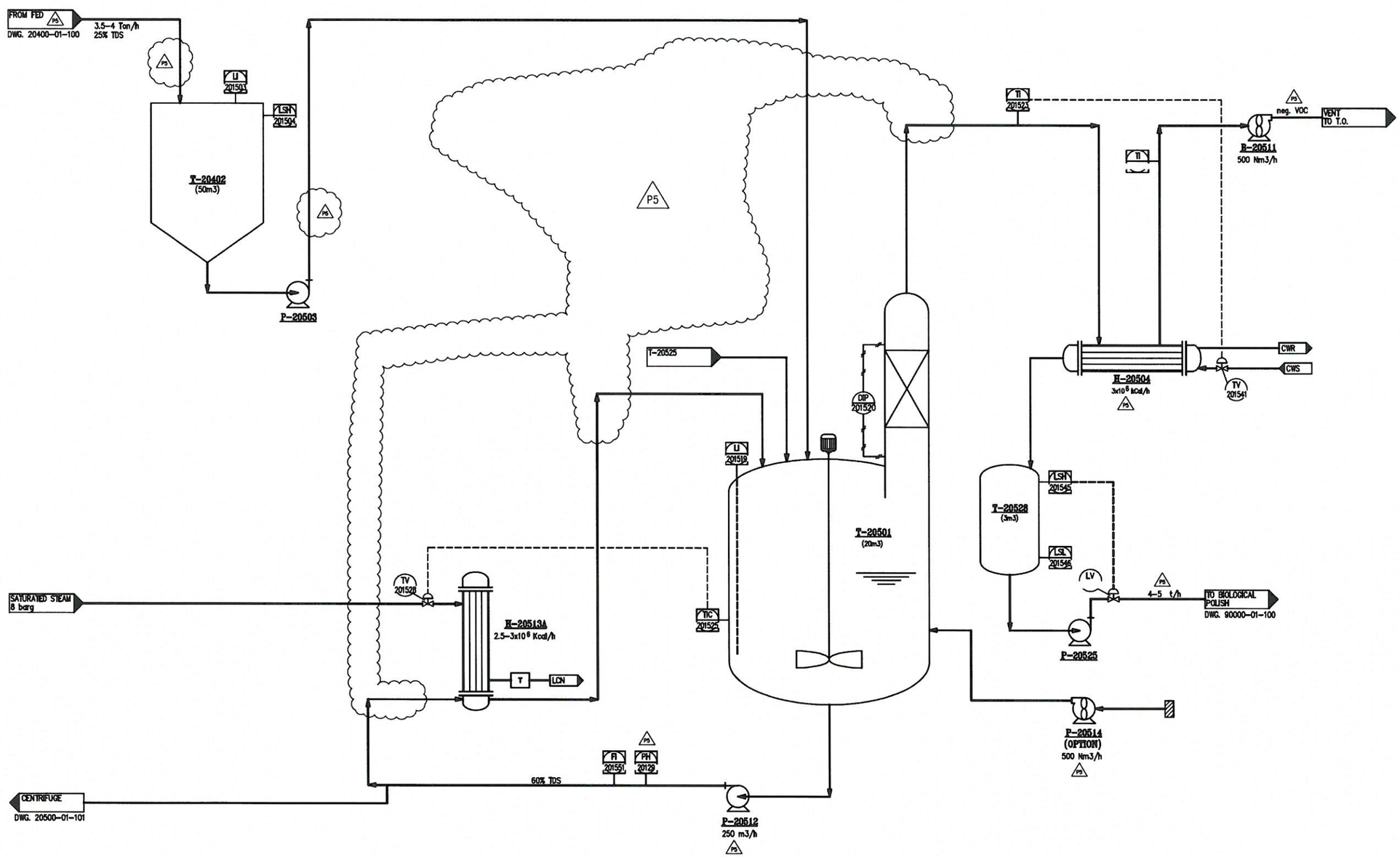


| no. | description | date | by |
|---|---|---|---|
| P5 | UPDATED | 29.10.15 | N.R. |
| P3 | UPDATED | 14.01.15 | N.R. |
| P2 | UPDATED | 23.12.14 | N.R. |
| P1 | UPDATED AS NOTED | 09.12.14 | N.R. |
| P0 | FOR COMMENTS | 19.11.13. | N.R. |

REVISIONS

| | by | date |
|---|---|---|
| design. | N.R. | 19.11.13. |
| drawn. | F.K. | 19.11.13. |
| check. | | |
| appr. | | |

elcon

NEW PLANT

SALTS CONCENTRATION THERMAL TREATING
DIAGRAM OF PIPING INSTRUMENTATION AND PROCESS FLOW

proj. no: –
dwg. no: USA-20500-01-100
comp. dwg. no: USA-20500-01-100(PFD)
issue: P5

\\:Y\PFD\PFD-USA-REV_P5\USA-20500-01-100(PFD)_P5.dwg, 02/11/2015 10:47:01

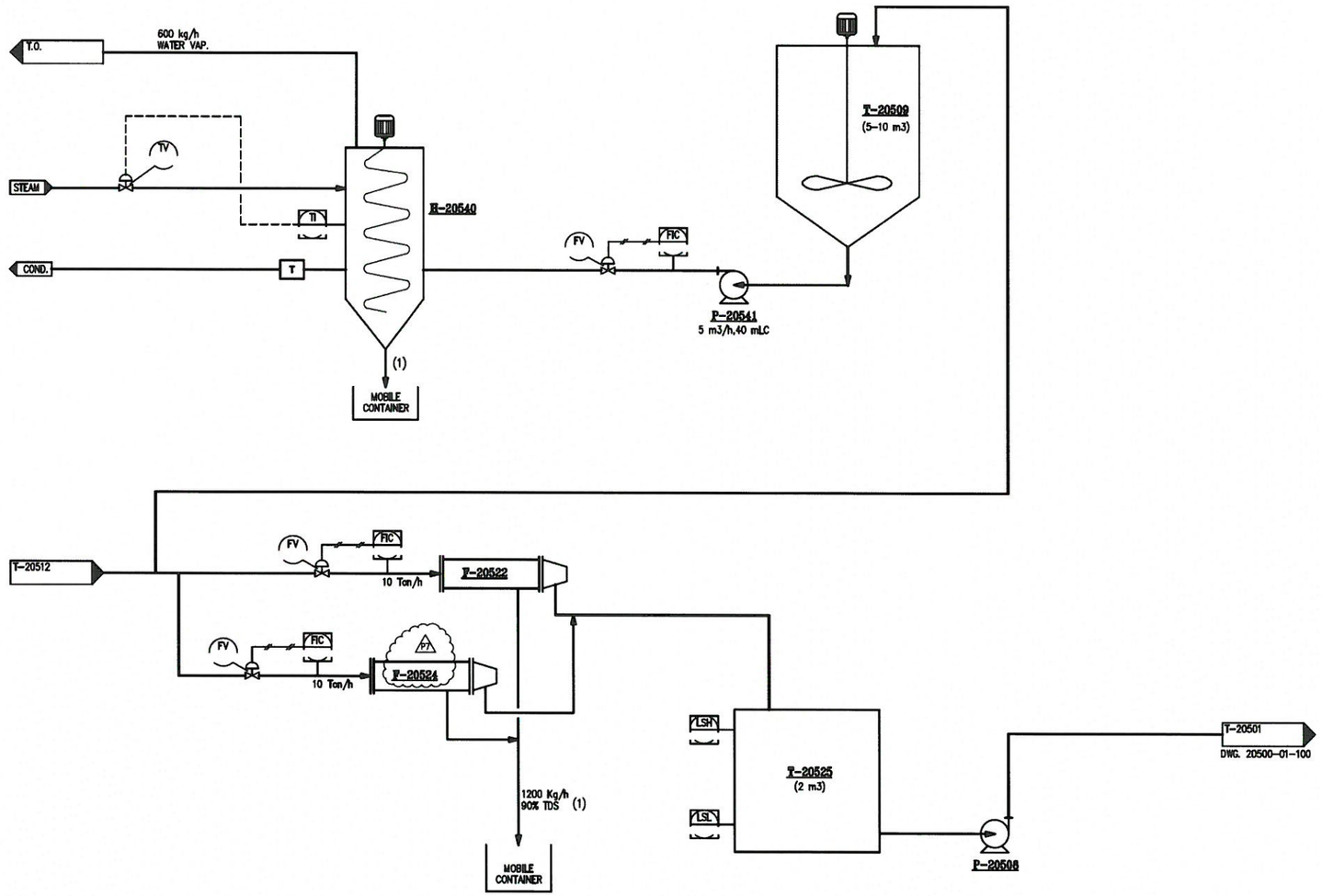


NOTES:

(1) TOTAL OF 1200-1300 kg/h
90% TDS

| no. | description | date | by |
|---|---|---|---|
| P7 | UPDATED AS NOTED | 15.02.17 | N.R. |
| P6 | UPDATED | 14.04.16 | N.R. |
| P5 | UPDATED | 29.10.15 | N.R. |
| P3 | UPDATED | 14.01.15 | N.R. |
| P2 | UPDATED | 23.12.14 | N.R. |
| P1 | UPDATED AS NOTED | 08.12.14 | N.R. |
| P0 | FOR COMMENTS | 19.11.13. | N.R. |

REVISIONS

| | by | date |
|---|---|---|
| design.: | N.R. | 19.11.13. |
| drawn: | F.K. | 19.11.13. |
| check.: | | |
| appr.: | | |

title: NEW PLANT

title: SALTS CONCENTRATION THERMAL TREATING
DIAGRAM OF PIPING INSTRUMENTATION AND PROJECT FLOW

elcon

proj. no: –
dwg. no: USA-20500-01-101
issue: P7
comp. dwg. no: USA-20500-01-101(PFD)

Y:\מפ\Y:\PFD\LAST VERSIONS (ALL UNITS)\UNIT 20\USA-20500-01-101(PFD) P7.dwg, 15/02/2017 14:10:14

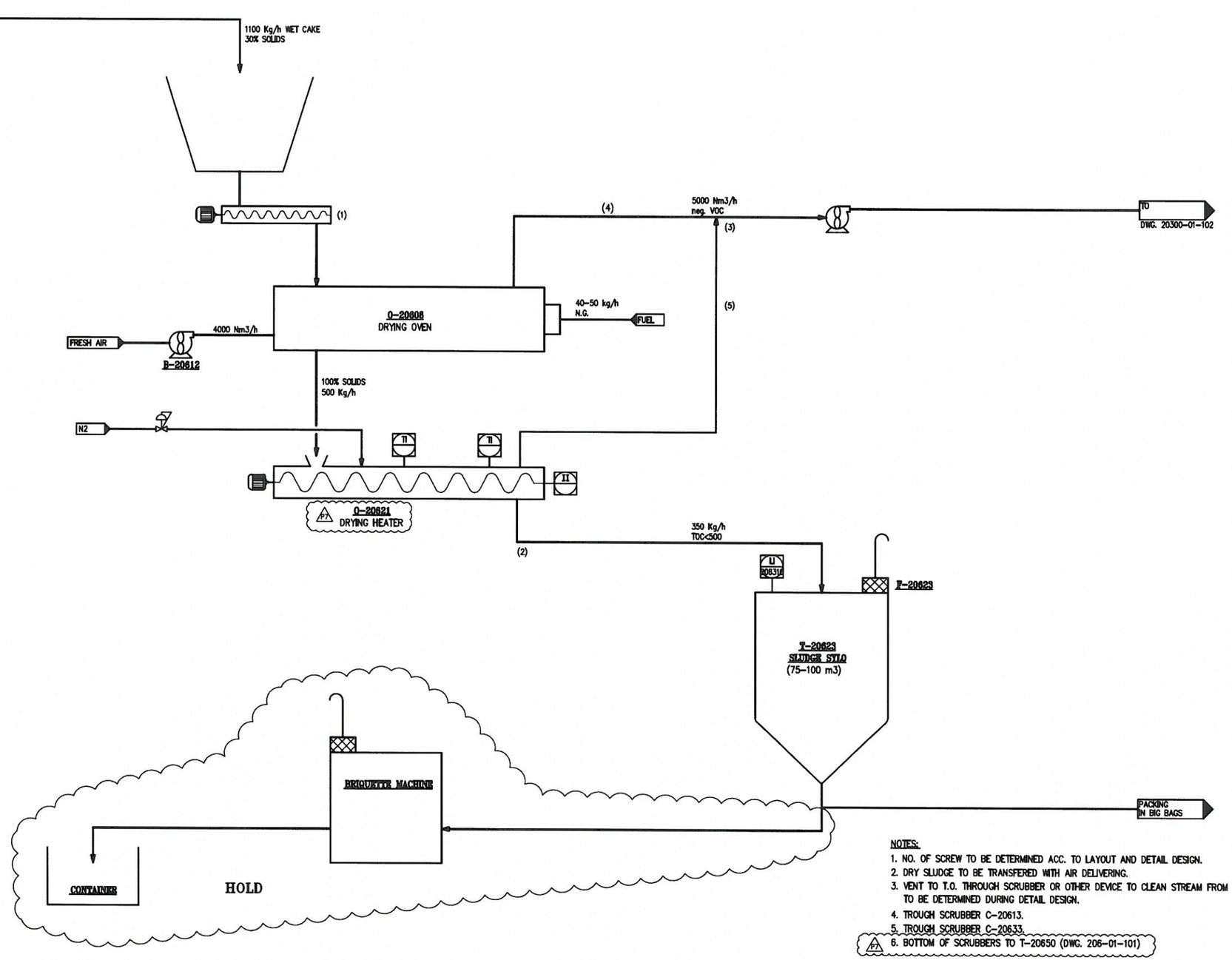


NOTES:

1. NO. OF SCREW TO BE DETERMINED ACC. TO LAYOUT AND DETAIL DESIGN.
2. DRY SLUDGE TO BE TRANSFERED WITH AIR DELIVERING.
3. VENT TO T.O. THROUGH SCRUBBER OR OTHER DEVICE TO CLEAN STREAM FROM DUST. TO BE DETERMINED DURING DETAIL DESIGN.
4. TROUGH SCRUBBER C-20613.
5. TROUGH SCRUBBER C-20633.
6. BOTTOM OF SCRUBBERS TO T-20650 (DWG. 206-01-101)

| no. | description | date | by |
|---|---|---|---|
| P7 | UPDATED AS NOTED | 15.02.17 | N.R. |
| P6 | UPDATED | 16.11.15 | N.R. |
| P5 | UPDATED | 29.10.15 | N.R. |
| P3 | UPDATED | 14.01.15 | N.R. |
| P2 | UPDATED | 23.12.14 | N.R. |
| P1 | UPDATED AS NOTED | 09.12.14 | N.R. |
| P1 | FOR COMMENTS | 31.03.14 | N.R. |
| P0 | FOR COMMENTS | 19.11.13 | N.R. |

REVISIONS

| | by | date |
|---|---|---|
| design: | N.R. | 19.11.13. |
| drawn: | F.K. | 19.11.13. |
| check.: | | |
| appr.: | | |

title: NEW PLANT

title: SLUDGE DRYING
DIAGRAM OF PIPING INSTRUMENTATION AND PROCESS FLOW

elcon

proj. no: –
dwg. no: USA-20600-01-100
comp. dwg. no: USA-20600-01-100(PFD)
issue: P7

:\מפ\:Y\PFD\LAST VERSIONS (ALL UNITS)\UNIT 20\USA-20600-01-100(PFD) P7.dwg, 15/02/2017 14:21:26

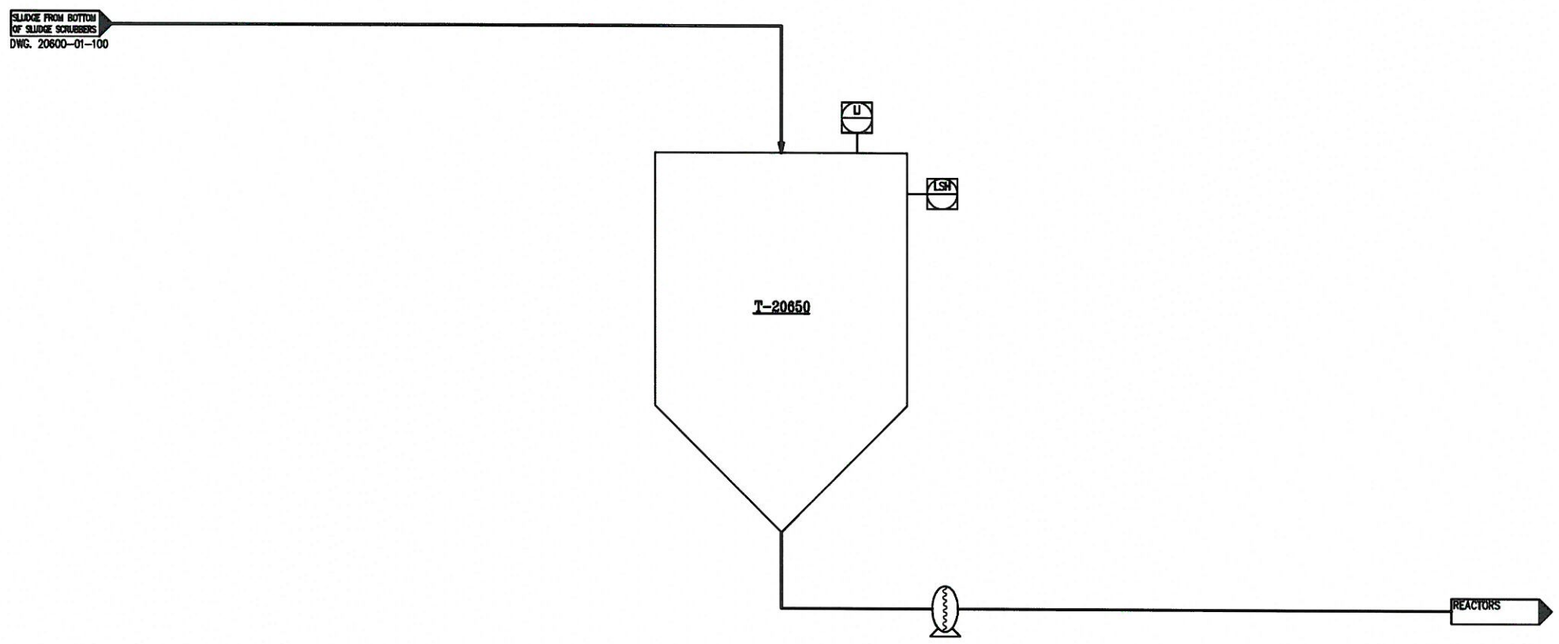


| no. | description | date | by |
|---|---|---|---|
| P0 | UPDATED FOR APPROVAL | 15.02.17 | N.R. |

REVISIONS

| | by | date |
|---|---|---|
| design: | N.R. | 15.02.17 |
| drawn: | Danuta | 15.02.17 |
| check: | | |
| appr.: | | |

elcon

title: NEW PLANT

title: SLUDGE TANK
DIAGRAM OF PIPING INSTRUMENTATION AND PROCESS FLOW

proj. no: –

dwg. no: USA-20600-01-101

comp. dwg. no: USA-20600-01-101(PFD)

issue: P0

Y:\מפ\:Y:\PFD\LAST VERSIONS (ALL UNITS)\UNIT 20\USA-20600-01-101(PFD) P0.dwg, 15/02/2017 14:51:20

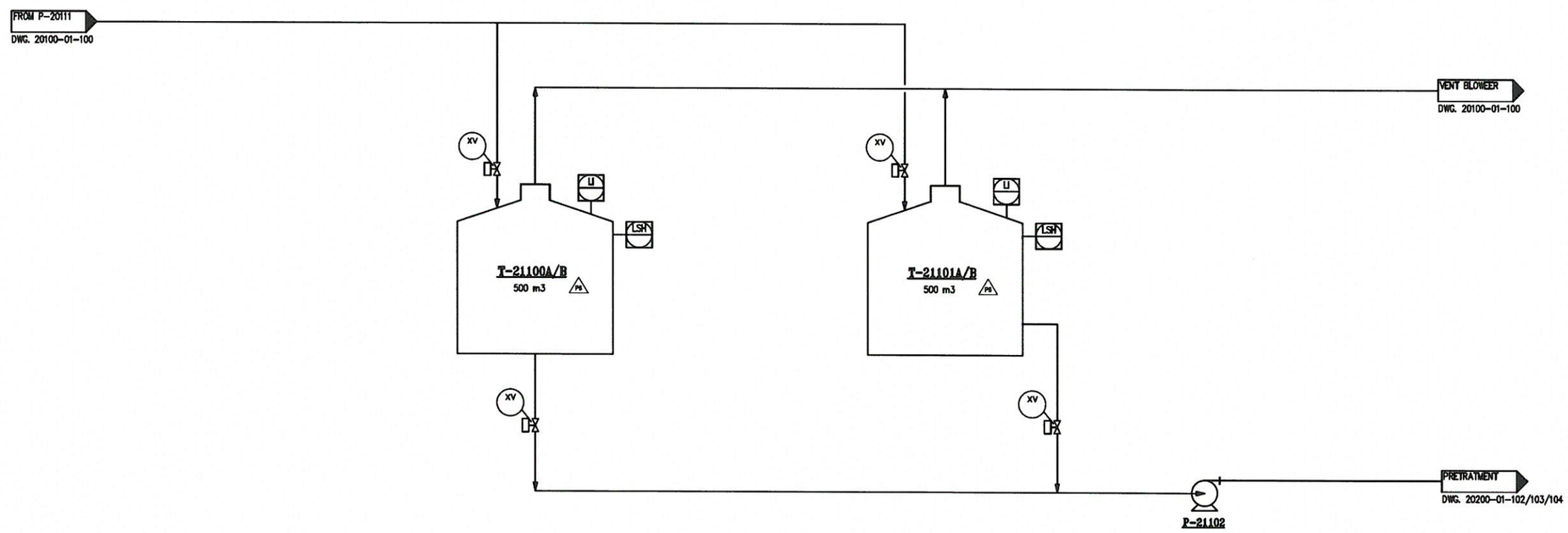


| no. | description | date | by | app. |
|---|---|---|---|---|
| P6 | UPDATED | 16.11.15 | N.R. | |
| P5 | UPDATED | 29.10.15 | N.R. | |
| P3 | UPDATED | 14.01.15 | N.R. | |
| P2 | UPDATED | 23.12.14 | N.R. | |
| P1 | UPDATED AS NOTED | 09.12.14 | N.R. | |
| P1 | UPDATED AS NOTED | 09.12.14 | N.R. | |
| P0 | FOR COMMENTS | 19.11.13 | N.R. | |

REVISIONS

| | by | date |
|---|---|---|
| design.: | N.R. | 19.11.13 |
| drawn: | F.K. | 19.11.13. |
| check.: | | |
| appr.: | | |

title: NEW PLANT

title: UNIT 21

DIAGRAM OF PIPING INSTRUMENTATION AND PROCESS FLOW

proj. no

dwg. no: USA-21100-01-100

comp. dwg. no: USA-21100-01-101(PFD)

issue: P6

elcon

\J\:Y \J\:Y\PFD\PFD-USA-REV_P6\USA-21100-01-100(PFD)_P6.dwg, 16/11/2015 14:05:59

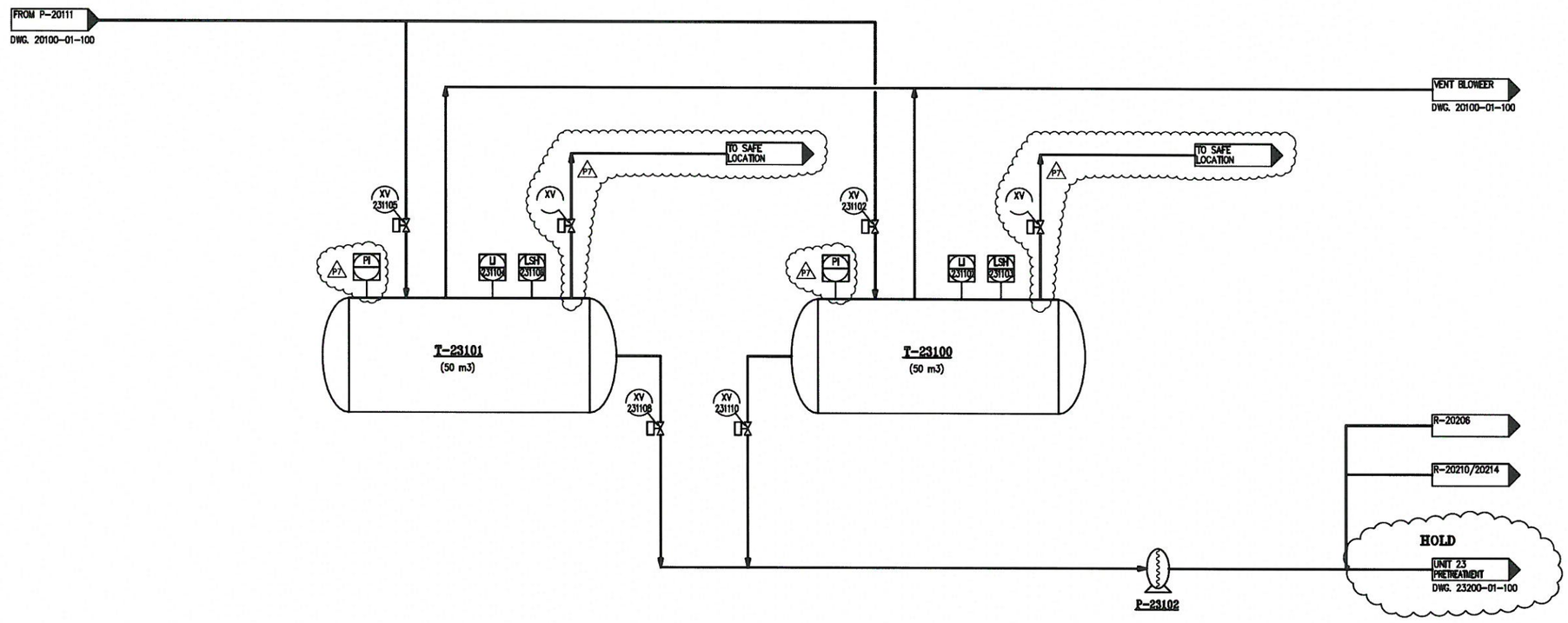


NOTES:

1. DESIGN VESSEL FOR 3 barg/FV.

| no. | description | date | by | app. |
|---|---|---|---|---|
| P6 | UPDATED AS NOTED | 15.02.17 | N.R. | |
| P6 | PSV ADDITION | 23.08.16 | N.R. | |
| P5 | UPDATED | 29.10.15 | N.R. | |
| P3 | UPDATED | 14.01.15 | N.R. | |
| P2 | UPDATED | 23.12.14 | N.R. | |
| P1 | UPDATED AS NOTED | 09.12.14 | N.R. | |
| P0 | FOR COMMENTS | 19.11.13. | N.R. | |

REVISIONS

| | by | date |
|---|---|---|
| design.: | N.R. | 19.11.13. |
| drawn: | F.K. | 19.11.13. |
| check.: | | |
| appr.: | | |

title: NEW PLANT

title: CONCENTRATED WASTE STORAGE
DIAGRAM OF PIPING INSTRUMENTATION AND PROCESS FLOW

elcon

proj. no

dwg. no: USA-23100-01-100

comp. dwg. no: USA-23100-01-100(PFD)

issue: P7

Y:\מק\:Y:\PFD\LAST VERSIONS (ALL UNITS)\UNIT 23\USA-23100-01-100(PFD) P7.dwg, 15/02/2017 15:54:16

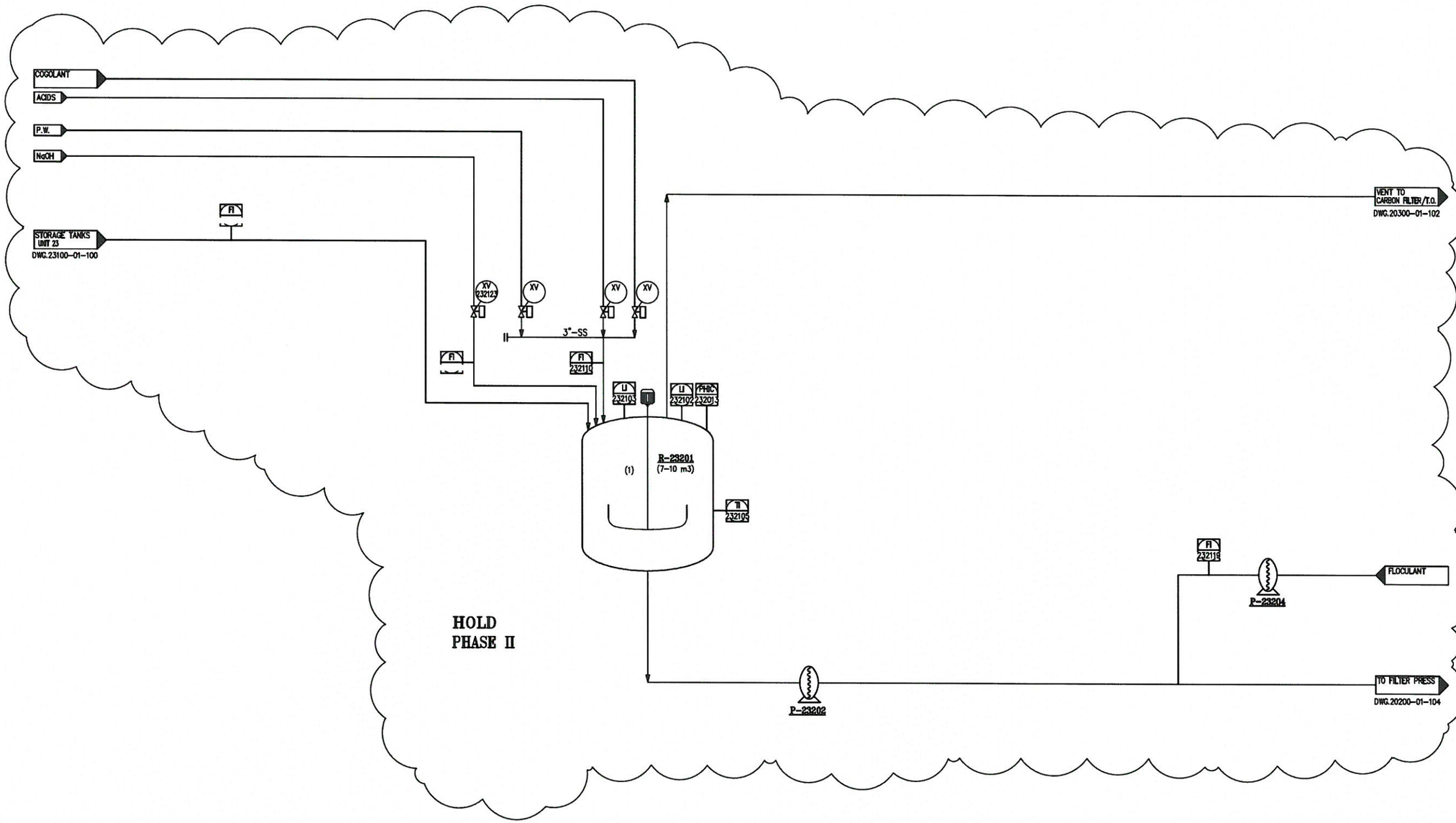


NOTES:

(1) BATCH REACTOR

| no. | description | date | by | sup. |
|---|---|---|---|---|
| P5 | UPDATED | 29.10.15 | N.R. | |
| P3 | UPDATED | 14.01.15 | N.R. | |
| P2 | UPDATED | 23.12.14 | N.R. | |
| P1 | UPDATED AS NOTED | 09.12.14 | N.R. | |
| P0 | FOR COMMENTS | 19.11.13. | N.R. | |

REVISIONS

| | by | date |
|---|---|---|
| design: | N.R. | 19.11.13. |
| drawn: | F.K. | 19.11.13. |
| check.: | | |
| appr.: | | |

title: NEW PLANT

title: SLUDGE PRETREATMENT R-23201
DIAGRAM OF PIPING INSTRUMENTATION AND PROCESS FLOW

elcon

proj. no: –
dwg. no: USA-23200-01-100
comp. dwg. no: USA-23200-01-100(PFD)
issue: P5

Y:\PFD\PFD-USA-REV_P5\USA-23200-01-100(PFD)_P5.dwg, 02/11/2015 10:54:51

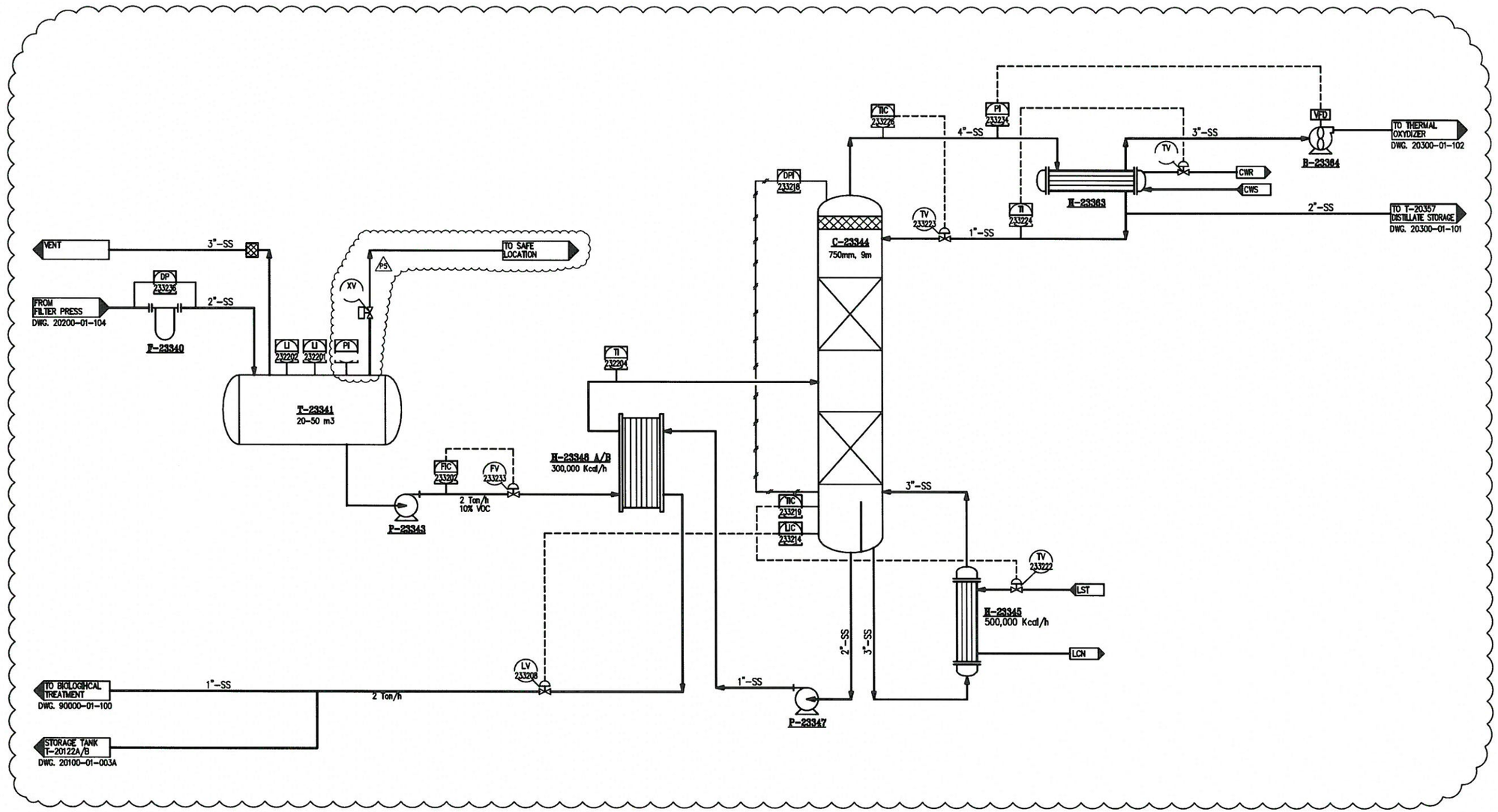


| | | | | |
|---|---|---|---|---|
| P5 | UPDATED AS NOTED | 15.02.17 | N.R. | |
| P4 | UPDATED | 14.04.16 | N.R. | |
| P3 | UPDATED | 14.01.15 | N.R. | |
| P2 | UPDATED | 23.12.14 | N.R. | |
| P1 | UPDATED AS NOTED | 09.12.14 | N.R. | |
| P1 | UPDATED AS NOTED | 09.12.14 | N.R. | |
| P0 | FOR COMMENTS | 19.11.13. | N.R. | |
| no. | description | date | by | |

REVISIONS

| | by | date |
|---|---|---|
| design.: | N.R. | 19.11.13. |
| drawn: | F.K. | 19.11.13. |
| check.: | | |
| appr.: | | |

title: NEW PLANT

title: DISTILLATION

DIAGRAM OF PIPING INSTRUMENTATION AND PROCESS FLOW

elcon

proj. no: –

dwg. no: USA-23300-01-100

issue: P5

corrp. dwg. no: USA-23300-01-100(PFD)

Y:\מפ\:Y\PFD\LAST VERSIONS (ALL UNITS)\UNIT 23\USA-23300-01-100(PFD) P5.dwg, 15/02/2017 15:55:02

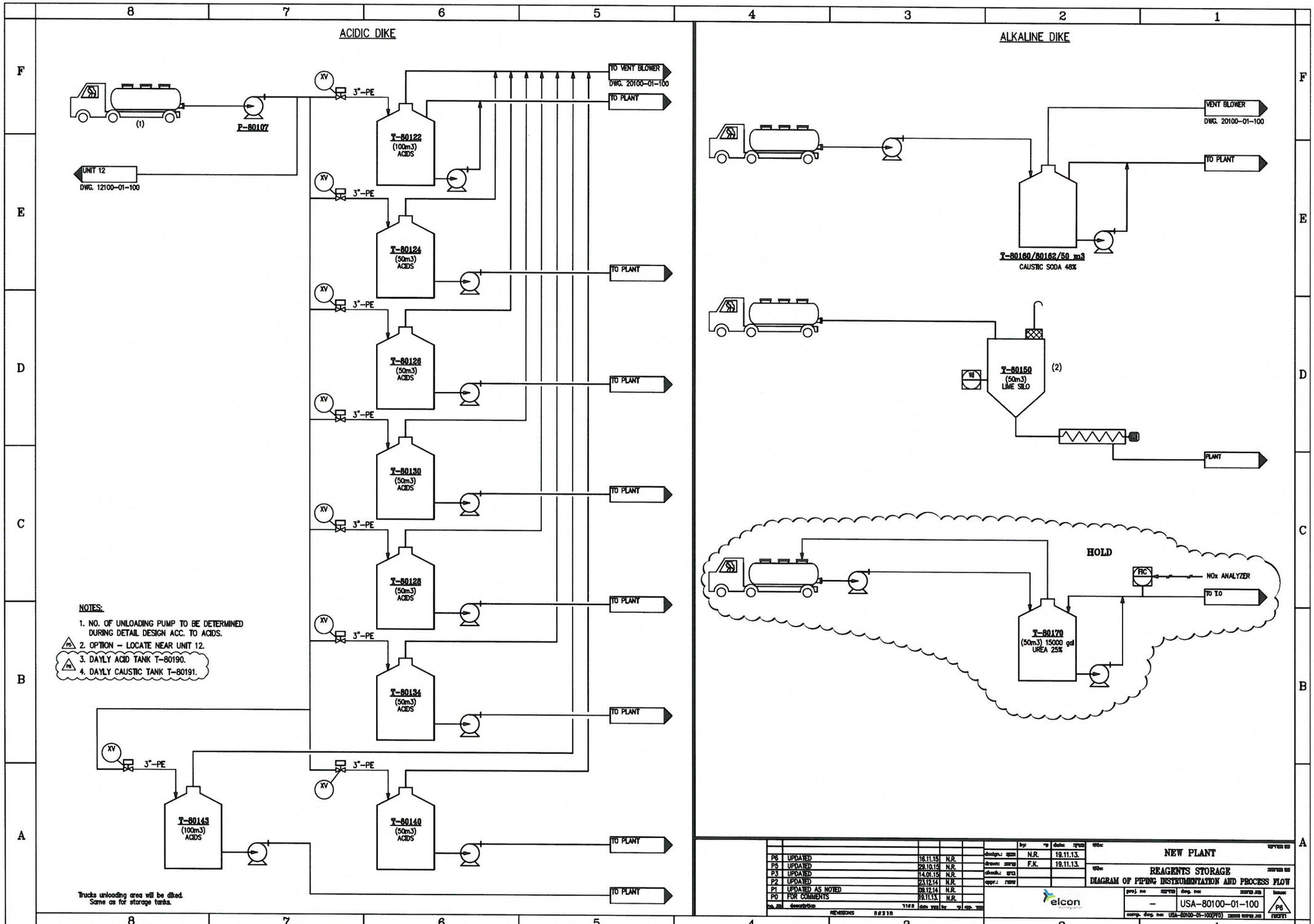


\J\:Y 5J\:Y\PFD\PFD-USA-REV_P6\USA-80100-01-100(PFD)_P6.dwg, 16/11/2015 14:07:31

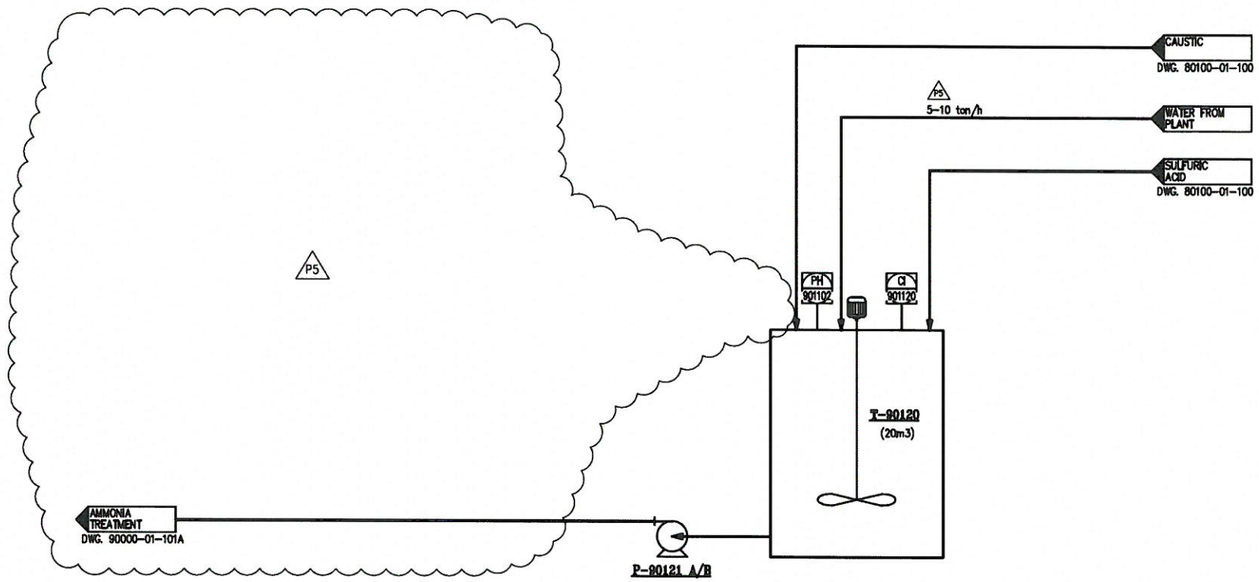


| | | | | |
|---|---|---|---|---|
| P5 | UPDATED | 29.10.15 | N.R. | |
| P3 | UPDATED FOR DESIGN | 13.01.15 | N.R. | |
| P2 | UPDATED | 23.12.14 | N.R. | |
| P1 | UPDATED AS NOTED | 08.12.14 | N.R. | |
| P0 | FOR COMMENTS | 19.11.13. | N.R. | |
| no. | description | date | by | |

REVISIONS

| | by | date |
|---|---|---|
| design: | N.R. | 19.11.13. |
| drawn: | F.K. | 19.11.13. |
| check: | | |
| appr: | | |

elcon

title: NEW PLANT

title: WATER COLLECTION

DIAGRAM OF PIPING INSTRUMENTATION AND PROCESS FLOW

proj. no

dwg. no USA-90000-01-100

comp. dwg. no USA-90000-01-100(PFD)

issue P5

\Y 9\:Y\PFD\PFD-USA-REV_P5\USA-90000-01-100(PFD)_P5.dwg, 02/11/2015 15:32:43

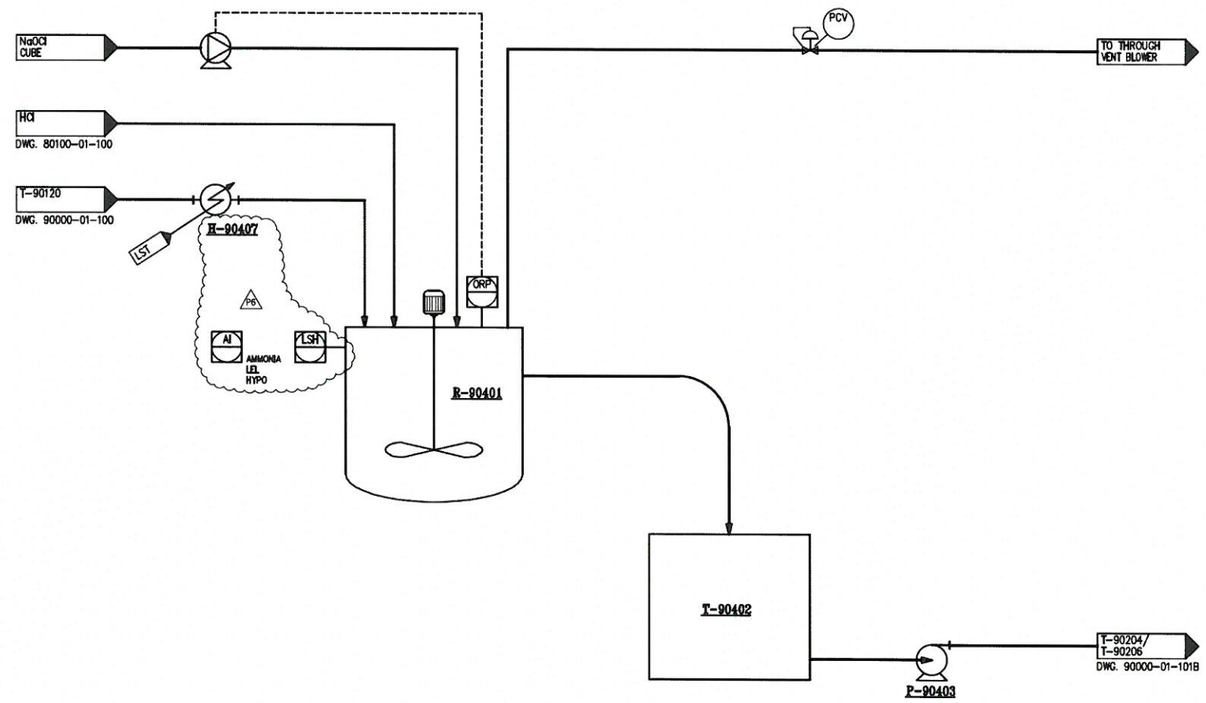


| no. | description | date | by |
|---|---|---|---|
| P6 | UPDATED AS NOTED | 15.02.17 | N.R. |
| P5 | UPDATED | 29.10.15 | N.R. |
| P3 | UPDATED FOR DESIGN | 13.01.15 | N.R. |
| P2 | UPDATED FOR DESIGN | 11.01.15 | N.R. |
| P1 | APPROVED FOR DETAIL DESIGN | 05.01.15 | N.R. |

REVISIONS

| | by: | date: |
|---|---|---|
| design.: | N.R. | 05.01.15 |
| drawn.: | F.K. | 05.01.15 |
| check.: | | |
| appr.: | | |

title: NEW PLANT

title: AMMONIA TREATMENT

DIAGRAM OF PIPING INSTRUMENTATION AND PROCESS FLOW

elcon

proj. no

dwg. no: USA-90000-01-101A

comp. dwg. no: USA-90000-01-101A(PFD)

issue: P6

:\מ\:Y מס\:Y\PFD\LAST VERSIONS (ALL UNITS)\UNIT 90\USA-90000-01-101A(PFD) P6.dwg, 16/02/2017 07:34:52

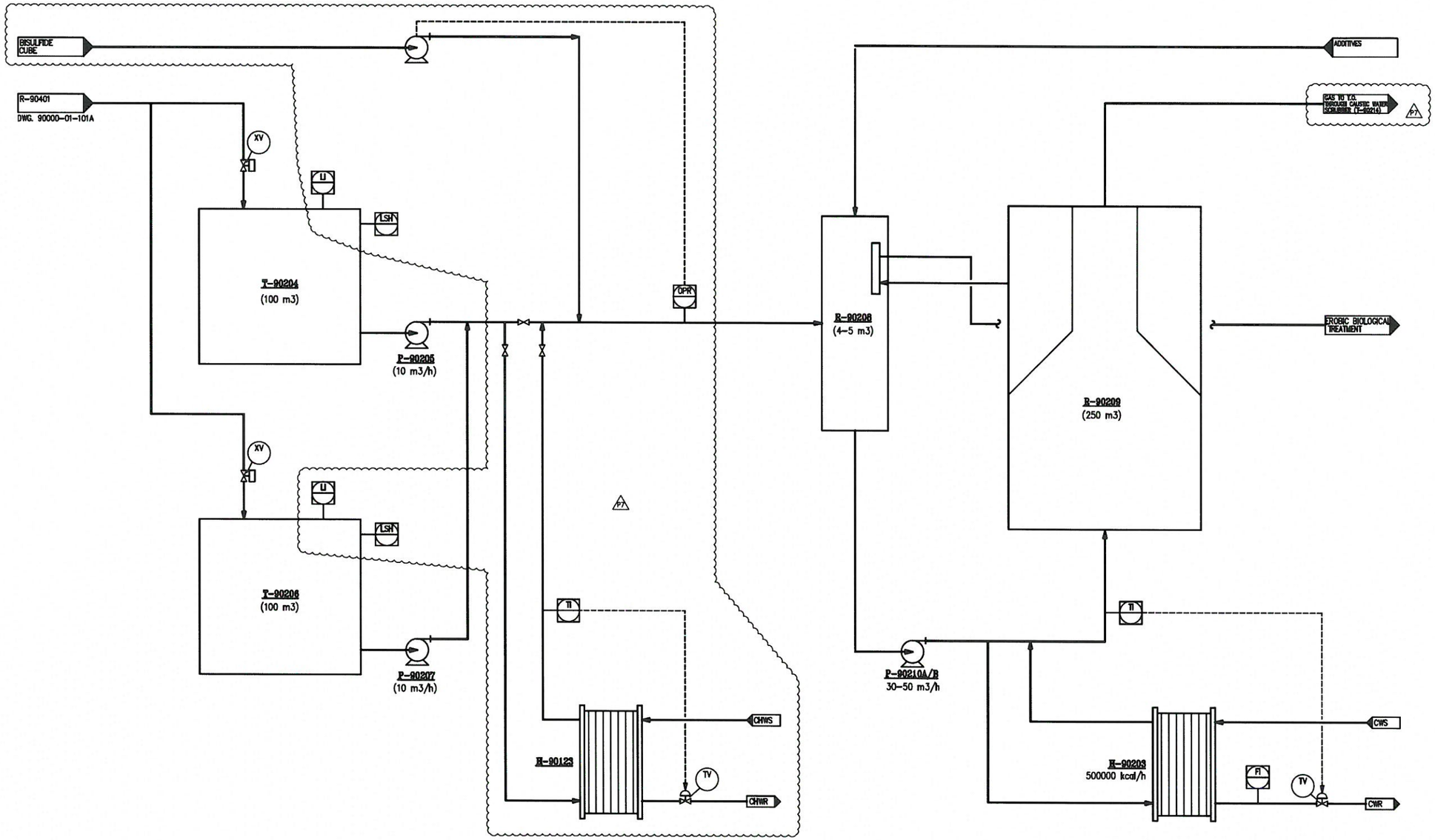


| no. | description | date | by | app. |
|---|---|---|---|---|
| P7 | UPDATED AS NOTED | 15.02.17 | N.R. | |
| P6 | UPDATED | 16.11.15 | N.R. | |
| P5 | UPDATED | 29.10.15 | N.R. | |
| P3 | UPDATED FOR DESIGN | 13.01.15 | N.R. | |
| P2 | UPDATED FOR DESIGN | 11.01.15 | N.R. | |
| P1 | APPROVED FOR DETAIL DESIGN | 05.01.15 | N.R. | |

REVISIONS

| | by | date |
|---|---|---|
| design | N.R. | 05.01.15 |
| drawn | F.K. | 05.01.15 |
| check | | |
| appr. | | |

title: NEW PLANT

UN-AEROBIC BIOLOGICAL TREATMENT

DIAGRAM OF PIPING INSTRUMENTATION AND PROCESS FLOW

elcon

proj. no

dwg. no: USA-90000-01-101B

comp. dwg. no: USA-90000-01-101B(PFD)

issue: P7

:\מ\:Y מפ\:Y\PFD\LAST VERSIONS (ALL UNITS)\UNIT 90\USA-90000-01-101B(PFD) P7.dwg, 16/02/2017 14:29:49

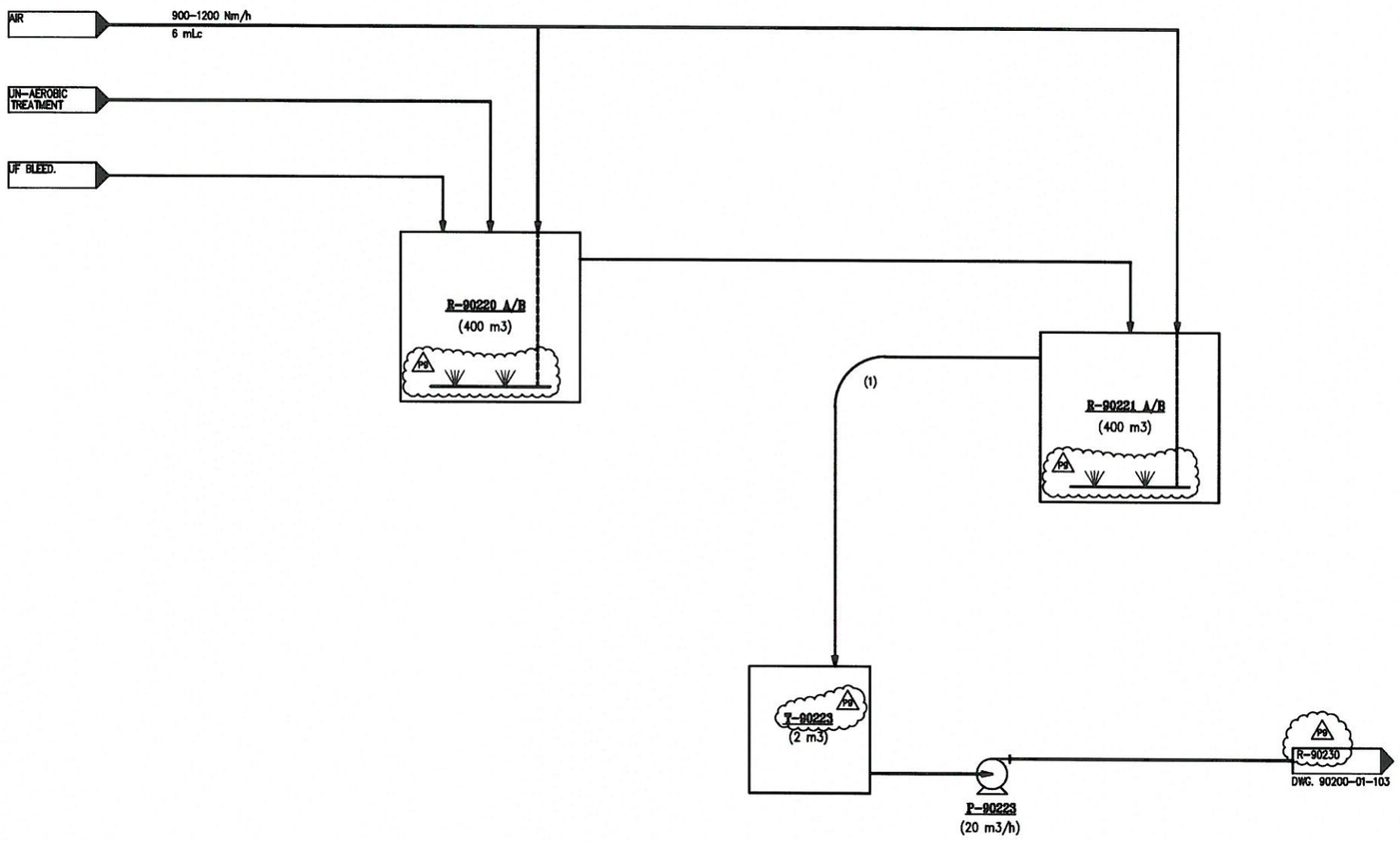


NOTES:

1. OVERFLOW TO SETTLER WITHOUT OVERFLOW TANK AND PUMP.
2. OPTION FOR TWO MORE AEROBIC POOLS.

| no. | description | date | by |
|---|---|---|---|
| P9 | UPDATED AS NOTED | 15.02.17 | N.R. |
| P8 | TAG No. MISTAKE | 23.08.16 | N.R. |
| P7 | UPDATED | 14.04.16 | N.R. |
| P6 | UPDATED | 16.11.15 | N.R. |
| P5 | UPDATED | 29.10.15 | N.R. |
| P2 | APPROVED FO DETAIL DESIGN | 04.01.15 | N.R. |
| P1 | UPDATED | 23.12.12 | N.R. |
| P0 | FOR APPROVAL | 14.12.12 | N.R. |

REVISIONS

| | by | date |
|---|---|---|
| design.: | N.R. | 14.12.12 |
| drawn: | F.K. | 14.12.12 |
| check.: | | |
| appr.: | | |

title: NEW PLANT

title: AEROBIC BIOLOGICAL TREATMENT PLANT
DIAGRAM OF PIPING INSTRUMENTATION AND PROCESS FLOW

elcon

proj. no
dwg. no: USA-90000-01-102
comp. dwg. no: USA-90000-01-102(PFD)
issue: P9

מקור: Y:\מפ\USA\Y\PFD\LAST VERSIONS (ALL UNITS)\UNIT 90\USA-90000-01-102(PFD) P9.dwg, 16/02/2017 09:12:36

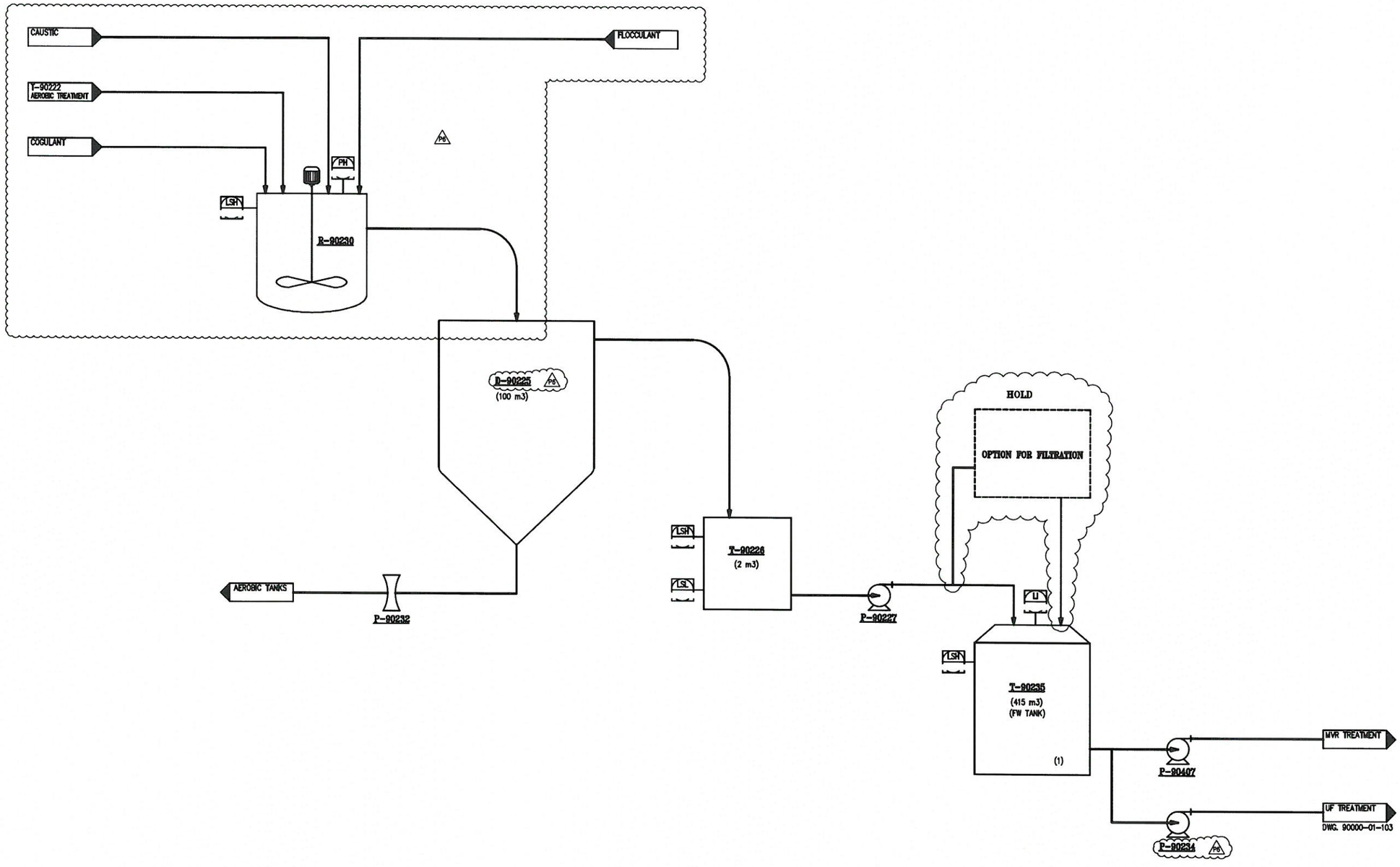


NOTES:

(1) LEVEL OF 300 m3 SHALL BE MAINTAINED.

| no. | description | date | by |
|---|---|---|---|
| P6 | UPDATED AS NOTED | 15.02.17 | N.R. |
| P5 | UPDATED | 29.10.15 | N.R. |
| P3 | UPDATED FOR DESIGN | 13.01.15 | N.R. |
| P2 | APPROVED FOR DETAIL DESIGN | 04.01.15 | N.R. |
| P1 | UPDATED | 23.12.12 | N.R. |
| P0 | FOR APPROVAL | 14.12.12 | N.R. |

REVISIONS

| | by | date |
|---|---|---|
| design: | N.R. | 14.12.12 |
| drawn: | F.K. | 14.12.12 |
| check: | | |
| appr.: | | |

elcon

title: NEW PLANT

title: SETTLING-BIOLOGICAL TREATMENT PLANT
DIAGRAM OF PIPING INSTRUMENTATION AND PROCESS FLOW

proj. no

dwg. no: USA-90000-01-103

comp. dwg. no: USA-90000-01-103(PFD)

issue: P6

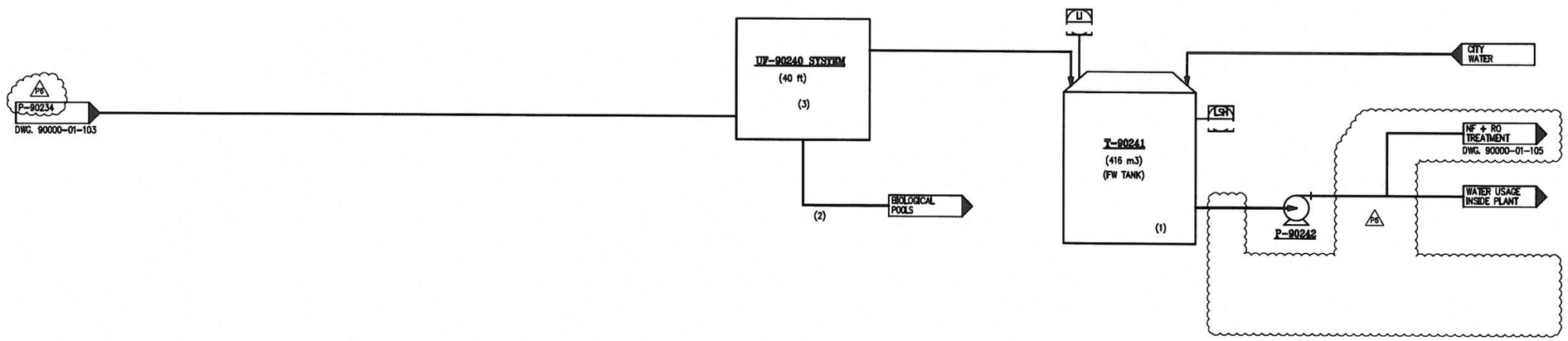


NOTES:

(1) LEVEL OF 300 m3 SHALL BE MAINTAINED, IN ORDER TO ALLOW ENTRANCE OF PROCESS WATER.

(2) UF BLEED ~5%

P6 (3) UF SYSTEM INCLUDES THE FOLLOWING TANKS: T-90243, T-90245, T-90246.

| no. | description | date | by |
|---|---|---|---|
| P6 | UPDATED AS NOTED | 15.02.17 | N.R. |
| P5 | UPDATED | 29.10.15 | N.R. |
| P2 | UPDATED FOR DESIGN | 13.01.15 | N.R. |
| P1 | UPDATED FOR DESIGN | 11.01.15 | N.R. |
| P0 | FOR APPROVAL | 04.01.15 | N.R. |

REVISIONS

| | by | date |
|---|---|---|
| design: | N.R. | 04.01.15 |
| drawn: | F.K. | 04.01.15 |
| check: | | |
| appr.: | | |

elcon

title: NEW PLANT

title: UF TREATMENT

DIAGRAM OF PIPING INSTRUMENTATION AND PROCESS FLOW

proj. no

dwg. no: USA-90000-01-104

comp. dwg. no: USA-90000-01-104(PFD)

issue: P6

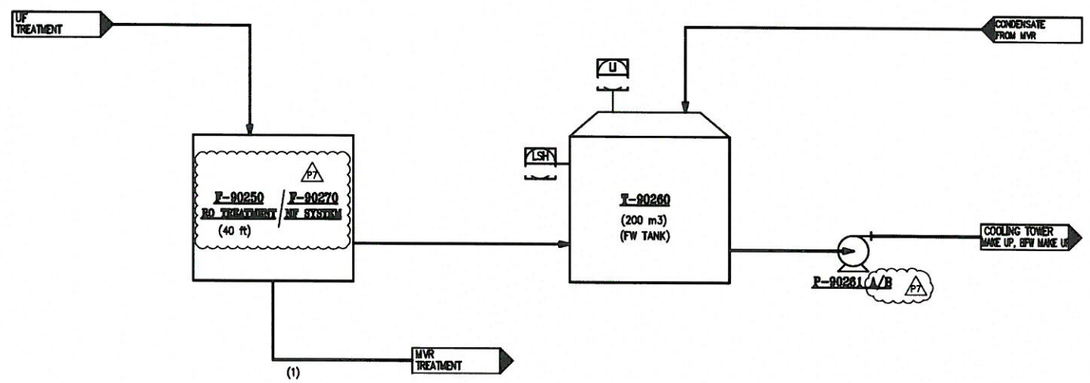


NOTES:

1. ~20%
2. RO SYSTEM INCLUDES THE FOLLOWING TANKS: T-90252, T-90253 T-90255
3. NF SYSTEM INCLUDES THE FOLLOWING TANKS: T-90272.

| no. | description | date | by |
|---|---|---|---|
| P7 | UPDATED AS NOTED | 15.02.17 | N.R. |
| P6 | UPDATED | 16.11.15 | N.R. |
| P5 | UPDATED | 29.10.15 | N.R. |
| P2 | UPDATED FOR DESIGN | 13.01.15 | N.R. |
| P1 | UPDATED FOR DESIGN | 11.01.15 | N.R. |
| P0 | FOR APPROVAL | 04.01.15 | N.R. |

REVISIONS

| | by | date |
|---|---|---|
| design | N.R. | 04.01.15 |
| drawn | F.K. | 04.01.15 |
| check | | |
| appr. | | |

elcon

title: NEW PLANT

title: RO TREATMENT

DIAGRAM OF PIPING INSTRUMENTATION AND PROCESS FLOW

proj. no

dwg. no: USA-90000-01-105

comp. dwg. no: USA-8000-01-105(PFD)

issue: P7

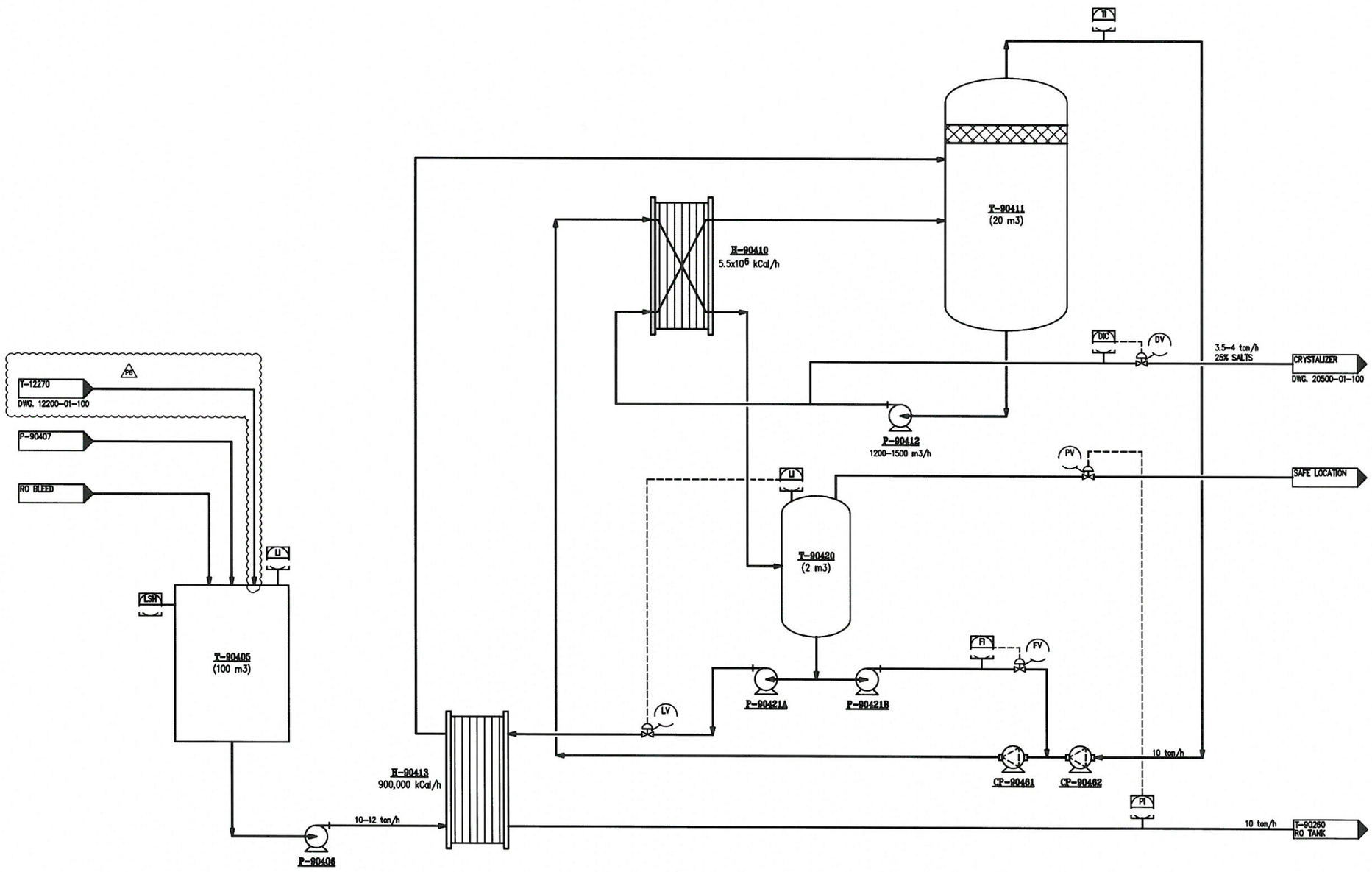


| | | | | |
|---|---|---|---|---|
| P6 | UPDATED AS NOTED | 15.02.17 | N.R. | |
| P5 | UPDATED | 29.10.15 | N.R. | |
| P3 | UPDATED | 14.01.15 | N.R. | |
| P2 | UPDATED | 23.12.14 | N.R. | |
| P1 | UPDATED AS NOTED | 09.12.14 | N.R. | |
| P0 | FOR COMMENTS | 19.11.13. | N.R. | |
| no. | description | date | by | |

REVISIONS

| | by | date |
|---|---|---|
| design. | N.R. | 19.11.13. |
| drawn. | F.K. | 19.11.13. |
| check. | | |
| appr. | | |

elcon

title: NEW PLANT

title: SALT CONCETRATION - MVR
DIAGRAM OF PIPING INSTRUMENTATION AND PROCESS FLOW

proj. no: –

dwg. no: USA-90400-01-100

comp. dwg. no: USA-90400-01-100(PFD)

issue: P6

:\מ\:Y מפ\:Y\PFD\LAST VERSIONS (ALL UNITS)\UNIT 90\USA-90400-01-100(PFD) P6.dwg, 16/02/2017 09:22:07

APPENDIX D-9

WRITTEN TANK AND EQUIPMENT ASSESSMENT

TANK AND PROCESS SYSTEM ENGINEERING ASSESSMENT

IES Engineers

Project Number EG151065.02

February 21, 2017

Prepared and Sealed by

James R. Rutenbar

PE License No. PE032242E

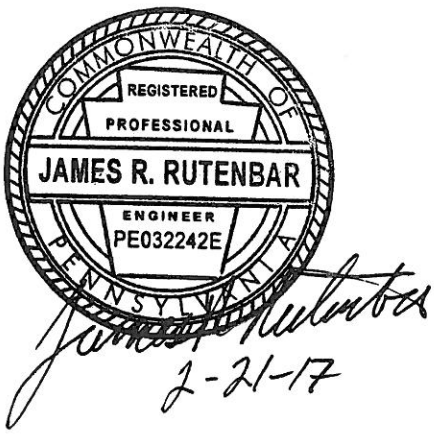


L:\Projects\Elcon\1065\EV171065.01\Part B\Final\Section D\1502-01R1.docx\saq

TABLE OF CONTENTS

INTRODUCTION 1

Section I. Storage Tank System Assessment 1

Section II. Processing Area Assessment 6

TABLES

Table 1 - Summary of Storage Tank Systems 3

Table 2 - Summary of Process Tank and Equipment 8

## INTRODUCTION

Elcon Recycling Center (Elcon) is proposing to construct a facility for receiving and processing RCRA hazardous liquid waste. The facility will include storage tank farms for the receipt and storage of waste, distribution piping, and a Processing Area that includes processing tanks and equipment to treat the waste rendering it non-hazardous. This report has been written and certified by a qualified Professional Engineer as to the structural integrity and suitability of the systems handling the hazardous waste streams that will be stored or treated in the storage tanks, process tanks, and process equipment. This written assessment addresses all of relevant information required by 40 CFR 264.192 related to the storage tanks, process tanks, and equipment, although not all of the process equipment is considered a tank under the RCRA rules. This section also supports the requirement under 40 CFR 264.601 to design miscellaneous treatment units to ensure protection of human health and the environment.

This assessment is comprised of two sections. Section I addresses the Storage Tank Systems and Section II assesses the Processing Area. The assessment report attests that the storage tank systems, process tank systems, and process equipment have sufficient structural integrity and is acceptable for the storing and treating of the proposed hazardous waste streams. The assessment shows that the foundations, structural supports, seams, connections, and pressure controls are adequately designed and that the tank systems and process equipment have sufficient structural strength, compatibility with the wastes that will be stored or treated, and corrosion protection to ensure that they will not collapse, rupture, or fail.

The assessment includes the following information:

- Design standard(s) according to which the tanks, process equipment, and the ancillary equipment will be constructed
- Hazardous characteristics of the waste to be handled
- Design considerations to ensure that the:
    - Tank and process equipment foundations will maintain the load of a full tank and process equipment
    - Tank systems are anchored to prevent flotation or dislodgment if the containment system is flooded or if the tanks are subject to wind or seismic loads
    - Tank systems or process equipment will withstand the effects of frost heave

## Section I. Storage Tank System Assessment

The Storage Tank Farms are separated based upon compatibility of the waste streams intended to be stored in them, with one tank farm for acidic waste, another for alkaline waste, the third for waste containing organics (flammable liquids), and the fourth for general wastewater. The new storage tanks will be atmospheric tanks designed, fabricated, labeled, and installed according to a recognized and accepted design standard such as UL 142, API 650, or STI, as appropriate for each tank's service and materials of construction. All other ancillary equipment (pipe rack support steel, piping, electrical, etc.) will be designed to meet the latest code governing the respective disciplines (piping and steel – ANSI, ASTM, and AISC, electrical – NEMA and NEC,

etc.). All the storage tanks are provided with continuous level indication and high level shutdown devices interlocked with the respective transfer pump and automated inlet valve to prevent overfilling. Upon reaching high level, the transfer pump to the tank is shut down and the inlet valve is automatically closed.

Additional information on the storage tank system design is provided in the Appendices of Section D of the Part B Application; the storage tank system design on the drawings in Appendix D-1, the P&IDS in Appendix D-7, and the PFDs in Appendix D-8. All storage tanks containing organics will vent to a thermal oxidizer and tanks containing inorganics will vent to the atmosphere, but have to option of venting to the thermal oxidizer.

The storage tanks will be installed in segregated concrete containment areas according to their service and hazard classification. The waste will include corrosives, including acidic waste with a pH as low as 0.1 and alkaline waste with a pH as high as 12, waste containing volatile organics (VOC) with concentrations from 10 to 80% VOC, and general hazardous RCRA wastewater. Table 1 provides a summary of the storage tanks, the containment systems they are in, and the hazard classification of the content.

To prevent degradation and leaks to the concrete foundations and containment systems, they will have a one of the following protective coatings from Carboline of Saint Louis, Missouri, or equivalent, applied as appropriate:

Sanitile 944SL (100% Solids, Epoxy)
Semstone 140 (100% Solids, High Performance Epoxy Lining System)
Semstone 145 (100% Solids, High Performance Novolac Epoxy Lining System)
Semstone 870 AFRC (High Performance Vinyl Ester Lining System)
Semstone 245 (100% Solids, High Performance Novolac Epoxy Lining System)

In addition, the drawings for the storage tank foundations and containments are included in Section D-1 of the Part B Permit Application. The tank foundations and reinforced concrete containment walls and slabs have been designed according to the Uniform Construction Code of the Commonwealth of Pennsylvania, the International Building Code, 2009 Edition, and the ASCE 7-05. All the tanks are designed to be anchored to their concrete foundations with steel anchor bolts.

The Storage Tank foundations have been designed to support the full weight of the tank and tank contents. The foundations have also been designed to resist lateral loads from wind or seismic activity in combination with the tank weights. In addition, the Storage Tank foundations are designed to resist uplift from tank flotation or uplifts generated by wind or seismic events. The foundations have sufficient thickness and reinforcing to provide sufficient anchor bolt embedment to resist all tension loads and lateral loads.

All tank foundations will be constructed at or below the frost line, as required by the geotechnical report, to resist frost heave.

**Table 1 Summary of Storage Tank Systems[1]**

| | Tag No. | Service | Contents | Nominal Volume (gal) | Tank Materials of Construction | Containment Area | Area | Hazard Classification |
|---|---|---|---|---|---|---|---|---|
| T- | 12102 | Storage tank unit 12 | Waste water | 26,500 | PE//PP/HDPE | Acid containment | 6 | Corrosive |
| T- | 80122 | Acids storage tank | Acids | 26,500 | PE//PP/HDPE | Acid containment | 6 | Corrosive |
| T- | 80124 | Acids storage tank | Acids | 13,100 | PE//PP/HDPE | Acid containment | 6 | Corrosive |
| T- | 80126 | Acids storage tank | Acids | 13,100 | PE//PP/HDPE | Acid containment | 6 | Corrosive |
| T- | 80128 | Acids storage tank | Acids | 13,100 | PE//PP/HDPE | Acid containment | 6 | Corrosive |
| T- | 80130 | Acids storage tank | Acids | 13,100 | PE//PP/HDPE | Acid containment | 6 | Corrosive |
| T- | 80134 | Acids storage tank | Acids | 13,100 | PE//PP/HDPE | Acid containment | 6 | Corrosive |
| T- | 80140 | Acids storage tank | Acids | 13,100 | PE//PP/HDPE | Acid containment | 6 | Corrosive |
| T- | 80143 | Acids storage tank | Acids | 26,500 | PE//PP/HDPE | Acid containment | 6 | Corrosive |
| T- | 12101 | Storage tank unit 12 | Waste water | 26,500 | PE | Acid containment | 6 | Corrosive |

**Table 1 Summary of Storage Tank Systems[1]**

| | Tag No. | Service | Contents | Nominal Volume (gal) | Tank Materials of Construction | Containment Area | Area | Hazard Classification |
|---|---|---|---|---|---|---|---|---|
| T- | 80160 | Caustic soda storage tank (fresh caustic, not waste) | Caustic soda | 11,200 | CS | Caustic containment | 6 | Corrosive |
| T- | 80162 | Caustic soda storage tank (waste) | Caustic soda | 11,200 | CS | Caustic containment | 6 | Corrosive |
| T- | 20357 | Rich distillate tank | Organic waste to 80% VOC | 13,200 | CS/SS | Flammable containment | 6 | Flammable Liquid |
| T- | 23100 | Unit 23 feed tank | Organic waste water 10 to 50% VOC | 13,200 | CS/SS | Flammable containment | 6 | Flammable Liquid |
| T- | 23101 | Unit 23 feed tank | Organic waste water 10 to 50% VOC | 13,200 | CS/SS | Flammable containment | 6 | Flammable Liquid |
| T- | 23341 | C-23344 feed tank | Organic waste water 10 to 100% VOC | 13,200 | SS | Flammable containment | 6 | Flammable Liquid |
| T- | 20120A | Storage tank unit 20 | Waste water | 136,000 | CS - epoxy coating | Waste containment | 7 | Hazardous Waste |
| T- | 20120B | Storage tank unit 20 | Waste water | 136,000 | CS - epoxy coating | Waste containment | 7 | Hazardous Waste |
| T- | 20121A | Storage tank unit 20 | Waste water | 136,000 | CS - epoxy coating | Waste containment | 7 | Hazardous Waste |
| T- | 20121B | Storage tank unit 20 | Waste water | 136,000 | CS - epoxy coating | Waste containment | 7 | Hazardous Waste |

**Table 1 Summary of Storage Tank Systems[1]**

| | Tag No. | Service | Contents | Nominal Volume (gal) | Tank Materials of Construction | Containment Area | Area | Hazard Classification |
|---|---|---|---|---|---|---|---|---|
| T- | 20122A | Storage tank unit 20 | Waste water | 136,000 | CS - epoxy coating | Waste containment | 7 | Hazardous Waste |
| T- | 20122B | Storage tank unit 20 | Waste water | 136,000 | CS - epoxy coating | Waste containment | 7 | Hazardous Waste |
| T- | 21100A | Storage tanks | Waste water | 136,000 | CS - epoxy coating | Waste containment | 7 | Hazardous Waste |
| T- | 21100B | Storage tanks | Waste water | 136,000 | CS - epoxy coating | Waste containment | 7 | Hazardous Waste |
| T- | 21101A | Storage tanks | Waste water | 136,000 | CS - epoxy coating | Waste containment | 7 | Hazardous Waste |
| T- | 21101B | Storage tanks | Waste water | 136,000 | CS - epoxy coating | Waste containment | 7 | Hazardous Waste |
| T- | Future | Storage tanks | Waste water | 136,000 | CS - epoxy coating | Waste containment | 7 | Hazardous Waste |

[1] Smaller tanks and service vessels may not be listed. However, all equipment will comply with RCRA requirements, such as containment, inspections, etc.

Notes:

1. All tanks are vertical except for T-20357, T-23100, T-23101, and T-23341, which are horizontal.
2. All tanks are designed to operate at ambient temperature.
3. All tanks are designed to operate at atmospheric or a slight negative pressure.
4. Materials of construction abbreviations: PE-polyethylene, PP – polypropylene, HDPE – high density polyethylene; CS – carbon steel; SS – stainless steel; FRP – fiberglass reinforced plastic

## Section II. Processing Area Assessment

The new processing tanks and equipment will include atmospheric tanks and other vessels designed, fabricated, labeled, and installed according to a recognized and accepted design standard such as UL 142, API 650, STI, and ASME as appropriate for the service and materials of construction of the tank or equipment. All other ancillary equipment (pipe rack support steel, piping, electrical, etc.) are designed to meet the latest code governing the respective disciplines (piping and steel -ANSI, ASTM and AISC, electrical – NEMA and NEC, etc.). All the tanks and equipment are provided with continuous level indication and high level shutdown devices interlocked with the respective transfer pump and automated inlet valve to prevent overfilling.

The Processing Area will include six tank farms segregated by purpose and compatibility and a Process Building. All the Processing Tank Farms and the Processing Building have independent and adequate containment to contain the largest vessel or tank plus the rainwater from a 25-year storm for outdoor tank farms or 20 minutes of water the fire suppression system in the Process Building.

The drawings for the process tank farms, equipment, and process building foundations and containments are included in Section D-1 of Section D the Part B Permit Application. The tank, equipment and building foundations, as well as the reinforced concrete containment walls and slabs, have been designed in accordance with the Uniform Construction Code of the Commonwealth of Pennsylvania, the International Building Code, 2009 Edition, and the ASCE 7-05. All the tanks and equipment are designed to be anchored to their concrete foundation or structural steel platform with steel anchor bolts.

To prevent degradation and leaks from the concrete foundations and containment systems, they will have an appropriate protective coating from Carboline of Saint Louis, Missouri, or equivalent applied:

Sanitile 944SL (100% Solids, Epoxy)
Semstone 140 (100% Solids, High Performance Epoxy Lining System)
Semstone 145 (100% Solids, High Performance Novolac Epoxy Lining System)
Semstone 870 AFRC (High Performance Vinyl Ester Lining System)
Semstone 245 (100% Solids, High Performance Novolac Epoxy Lining System)

The Process Tank foundations have been designed to support the full weight of the tank and tank contents. The foundations have also been designed to resist lateral loads from wind or seismic activity in combination with the tank weights. In addition, the Process Tank foundations are designed to resist uplift from tank flotation or uplifts generated by wind or seismic events. The foundations have sufficient thickness and reinforcing to provide enough anchor bolt embedment to resist all tension loads and lateral loads.

Table 2 provides a summary of the process tanks and equipment, the containment systems they are in, and the hazard classification of the content.

The Process Building containment slab has been designed with preliminary building loads in combination with full tank/equipment and/or the worst-case spill condition. The design, as shown in Section D, Appendix D-1 of the Part B Permit Application, represents the minimum requirements for spill containment. The final building design may require an increase in slab thickness and/or reinforcing beyond that required for the containment criteria based upon final equipment loading.

The Process Building slab has sufficient thickness and reinforcing to provide enough anchor bolt embedment to resist all tension loads and lateral loads from wind or seismic events.

Both the Process Tank foundations and the Process Building mat will be constructed below the frost line, as required by the Geotechnical Report, to resist frost heave.

## Table 2 Major Process Tank and Equipment[1]

| Tag No. | | Service | Content | Nominal Capacity US Gal | Pressure (Oper/ design) | Design Temp. (Oper/ design) (°C) | Mat'l. of constr. | Containment Area | Area | Hazard Classification |
|---|---|---|---|---|---|---|---|---|---|---|
| R- | 12201 | Unit 12 reactor | Wastewater | 13000 | atm | amb / 60 | FRP 470 | Process containment | 5 | Corrosive |
| R- | 12213 | Lime reactor | Lime | 3000 | atm | amb / 60 | CS | Process containment | 5 | Corrosive |
| T- | 12215 | Lime tank | Lime | 3000 | atm | amb / 60 | SS | Process containment | 5 | Corrosive |
| T- | 12231 | Water tank | Effluent water | 3000 | atm | amb / 60 | PE/PP/SS | Process containment | 5 | Corrosive |
| R- | 12267 | Reactor | Effluent water | 500 | atm | amb/60 | PE | Process containment | 5 | Corrosive |
| T- | 12263 | Settler | Effluent water | 5000 | atm | amb/60 | PE / PP/FRP 470 | Process containment | 5 | Hazardous Waste |
| T- | 12264 | Overflow tank | Effluent water | 500 | atm | amb / 60 | SS | Process containment | 5 | Hazardous Waste |
| R- | 20206 | Non continuous reactor | Wastewater | 13000 | atm /17 psig | amb / 60 | SS/FRP 470 | Production plant | 5 | Hazardous Waste |
| R- | 20210 | Non continuous reactor | Wastewater | 13000 | atm /17 psig | amb / 60 | SS/FRP 470 | Production plant | 5 | Hazardous Waste |
| R- | 20214 | Non continuous reactor | Wastewater | 13000 | atm /17 psig | amb / 60 | SS/FRP 470 | Production plant | 5 | Hazardous Waste |
| D- | 20220 | Settler unit 20 | Wastewater | 26000 | atm /17 psig | amb / 60 | CS with epoxy or PE lining | Production Plant | 5 | Hazardous Waste |

## Table 2 Major Process Tank and Equipment[1]

| Tag No. | | Service | Content | Nominal Capacity US Gal | Pressure (Oper/ design) | Design Temp. (Oper/ design) (°C) | Mat'l. of constr. | Containment Area | Area | Hazard Classification |
|---|---|---|---|---|---|---|---|---|---|---|
| T- | 20224 | Overflow tank from settler unit20 | Wastewater | 700 | atm /17 psig | amb / 60 | SS | Process containment | 5 | Hazardous Waste |
| T- | 20401 | FED feed | Wastewater | 25000 | atm /17 psig | amb / 100 | CS | Process containment | 5 | Flammable Liquid |
| T- | 20411 | FED flash tank | Wastewater | 5000 | atm /17 psig | 110 / 180 | SS | Production plant | 5 | Flammable Liquid |
| T | 20402 | Crystallizer feed tank | Brine | 32000 | atm | amb / 100 | CS with epoxy or PE lining | Process containment | 5 | Corrosive |
| T- | 20501 | Crystallizer | Brine | 5000 | atm /17 psig | 110 / 180 | SS | Production plant | 5 | Corrosive |
| T | 20528 | Crystallizer condensate tank | Effluent water | 1500 | atm | amb / 100 | SS | Production plant | 5 | Corrosive |
| T- | 20525 | centrifuge effluent | Brine | 500 | atm /17 psig | 110 / 180 | SS | Production plant | 5 | Corrosive |
| H- | 20540 | Thin film evaporator | Brine | 1500 | atm /17 psig | 60 / 180 | SS | Production plant | 5 | Hazardous Waste |
| T- | 20613 | Scrubber tank | sludge + water | 650 | atm /17 psig | 60 / 180 | SS | Production plant | 5 | Corrosive |
| T- | 20623 | Sludge silo - product | Dry sludge | 20000 | atm | amb/60 | CS | Production plant | 5 | Hazardous Waste |
| R- | 23201 | Unit 23 reactor | Organic waste water 10% VOC | 3000 | atm | amb / 100 | SS | Production plant | 5 | Flammable Liquid |

## Table 2 Major Process Tank and Equipment[1]

| Tag No. | | Service | Content | Nominal Capacity US Gal | Pressure (Oper/ design) | Design Temp. (Oper/ design) (°C) | Mat'l. of constr. | Containment Area | Area | Hazard Classification |
|---|---|---|---|---|---|---|---|---|---|---|
| C- | 23344 | distillation column | Waste water | 1750 | atm /17 psig | 111 / 180 | SS | Production plant | 5 | Flammable Liquid |
| T- | 80190 | Acid daily tank | Acids | 500 | atm /17 psig | amb / 60 | PE / HDPE/PP | Process containment | 5 | Corrosive |
| T- | 80191 | Caustic daily tank | Caustic soda | 500 | atm /17 psig | amb / 60 | PE / HDPE/PP | Process containment | 5 | Corrosive |
| T- | 90120 | treating water collection tank | Effluent water | 5000 | atm | amb/60 | PE | Biological treatment | 11 | Hazardous Waste |
| T | 90204 | Biologic treatment feed tank | Effluent water | 26500 | atm | amb / 60 | PE / HDPE/CS/SS | Biological treatment | 11 | Hazardous Waste |
| T | 90206 | Biologic treatment feed tank | Effluent water | 26500 | atm | amb / 60 | PE / HDPE/CS/SS | Biological treatment | 11 | Hazardous Waste |
| R- | 90208 | Anaerobic reactor | Effluent water | 1500 | atm | amb / 60 | PE / HDPE/PP | Biological treatment | 11 | Hazardous Waste |
| R- | 90209 | Anaerobic reactor | Effluent water | 66000 | atm | amb / 60 | SS | Biological treatment | 11 | Hazardous Waste |
| R- | 90220A | Biologic treatment | Effluent water | 110000 | atm | amb/60 | CS with epoxy | Biological treatment | 11 | Hazardous Waste |
| R- | 90220B | Biologic treatment | Effluent water | 110000 | atm | amb/60 | CS with epoxy | Biological treatment | 11 | Hazardous Waste |
| R- | 90221A | Biologic treatment | Effluent water | 110000 | atm | amb/60 | CS with epoxy | Biological treatment | 11 | Hazardous Waste |

## Table 2 Major Process Tank and Equipment[1]

| Tag No. | | Service | Content | Nominal Capacity US Gal | Pressure (Oper/ design) | Design Temp. (Oper/ design) (°C) | Mat'l. of constr. | Containment Area | Area | Hazard Classification |
|---|---|---|---|---|---|---|---|---|---|---|
| R- | 90221B | Biologic treatment | Effluent water | 110000 | atm | amb/60 | CS with epoxy | Biological treatment | 11 | Hazardous Waste |
| T- | 90226 | Overflow | Effluent water | 500 | atm | amb/60 | SS | Biological treatment | 11 | Hazardous Waste |
| T- | 90225 | Settler | Effluent water | 25000 | atm | amb/60 | CS with epoxy or PE lining | Biological treatment | 11 | Hazardous Waste |
| T- | 90235 | Clean water tank | Effluent water | 110000 | atm | amb/60 | CS | Biological treatment | 11 | Hazardous Waste |
| T- | 90241 | Clean water tank | Effluent water | 110000 | atm | amb/60 | CS | Biological treatment | 11 | Hazardous Waste |
| T- | 90260 | Clean water tank | Effluent water | 55000 | atm | amb/60 | CS | Biological treatment | 11 | Hazardous Waste |
| R- | 90401 | Ammonia treatment reactor | Effluent water | 800 | atm | amb/60 | CS/SS/PE | Biological treatment | 11 | Hazardous Waste |
| T- | 90402 | overflow | Effluent water | 800 | atm | amb/60 | CS/SS | Biological treatment | 11 | Hazardous Waste |
| T- | 90405 | MVR feed tank | Effluent water | 26500 | atm | amb/60 | CS | Biological treatment | 11 | Hazardous Waste |
| T- | 90411 | MVR flash tank | Effluent water | 5000 | atm /17 psig | 110 / 180 | SS | Biological treatment | 11 | Hazardous Waste |
| FP- | 12240 | Filter press | Wastewater | 16 FT. L x 5 FT. W x 5 FT. H | 8 barg | amb/60 | SS | Production plant | 5 | Corrosive |

## Table 2 Major Process Tank and Equipment[1]

| Tag No. | | Service | Content | Nominal Capacity US Gal | Pressure (Oper/ design) | Design Temp. (Oper/ design) (°C) | Mat'l. of constr. | Containment Area | Area | Hazard Classification |
|---|---|---|---|---|---|---|---|---|---|---|
| F- | 12243 | Centrifuge -- gypsum | Gypsum | 25 GPM | 8 barg | amb/60 | SS316 | Production plant | 5 | Hazardous Waste |
| T- | 12270 | Process water tank | Process water | 13,200 | atm | amb | FRP | Production plant | 5 | Hazardous Waste |
| FP- | 20218A | Filter press | Wastewater | $1M^2$ x 45 Plates x $1M^3$ | 8 barg | amb | PP | Production plant | 5 | Hazardous Waste |
| FP- | 20218B | Filter press | Wastewater | $1M^2$ x 45 Plates x $1M^3$ | 8 barg | amb | PP | Production plant | 5 | Hazardous Waste |
| FP- | 20218C | Filter press | Wastewater | $1M^2$ x 45 Plates x $1M^3$ | 8 barg | amb | PP | Production plant | 5 | Hazardous Waste |
| H- | 20410C | FED Evaporator | Waste liquid solvent | $9 \times 10^6$ Kcal/hr | 12 barg | 200 | SS | Production plant | 5 | Flammable |
| H- | 20410D | FED Evaporator | Waste liquid solvent | $9 \times 10^6$ Kcal/hr | 12 barg | 200 | SS | Production plant | 5 | Flammable |
| H- | 20513A | Crystallizer re-boiler | Brine | $3 \times 10^6$ Kcal/hr ~700 $M^2$ | 12 barg | 200 | SS | Production plant | 5 | Corrosive |
| F- | 20522 | Salts centrifuge | Brine | 25 GPM | 8 barg | 140 | SS316 | Production plant | 5 | Corrosive |
| F- | 20524 | Salts centrifuge | Brine | 25 GPM | 8 barg | 140 | SS316 | Production plant | 5 | Corrosive |
| O- | 20608 | Rotary oven | Sludge | 1500 KG/hr | atm | 800 | CS | Production plant | 5 | Hazardous Waste |
| O | 20621 | Drying Heater | Sludge | 1,100 KG/hr | atm | 700 | SS | Production Plant | 5 | Hazardous Waste |
| T- | 90240 | Ultrafiltration system | Treated wastewater | Per Vendor | atm | 60 | Varies | Biological treatment | 11 | Hazardous Waste |
| F- | 90250 | RO & NF Treatment | Treated wastewater | Per Vendor | atm | 60 | Varies | Biological treatment | 11 | Hazardous Waste |

## Table 2 Major Process Tank and Equipment[1]

| Tag No. | | Service | Content | Nominal Capacity US Gal | Pressure (Oper/ design) | Design Temp. (Oper/ design) (°C) | Mat'l. of constr. | Containment Area | Area | Hazard Classification |
|---|---|---|---|---|---|---|---|---|---|---|
| T- | 20509 | Thin film evaporator feed tank | Brine | 1,320 | atm | atm | SS | Production plant | 5 | Hazardous Waste |

[1] Smaller tanks and service vessels may not be listed. However, all equipment will comply with RCRA requirements, such as containment, inspections, etc.

APPENDIX D-10

GEOLOGIC INFORMATION

RES

Map 61

1981

A CELEBRATION OF FRIENDS
Pennsylvania's 300th Birthday

# ATLAS OF PRELIMINARY GEOLOGIC QUADRANGLE MAPS OF PENNSYLVANIA


Compiled and edited by
Thomas M. Berg
Christine M. Dodge


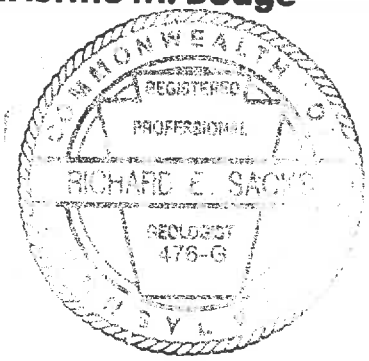



COMMONWEALTH OF PENNSYLVANIA
DEPARTMENT OF ENVIRONMENTAL RESOURCES
OFFICE OF RESOURCES MANAGEMENT
BUREAU OF
TOPOGRAPHIC AND GEOLOGIC SURVEY
Arthur A. Socolow, State Geologist

## SYMBOLS USED ON COMPILATION MAPS

**Contact**
Includes approximately located contacts.
Dashed where inferred or questionable.

**Fault**
Includes approximately located faults.
Dashed where inferred or questionable.

**Axial trace of anticline**

**Axial trace of syncline**

**Cutoff line**
An arbitrary, straight line occurring where one or more geologic units merge into another unit.

---

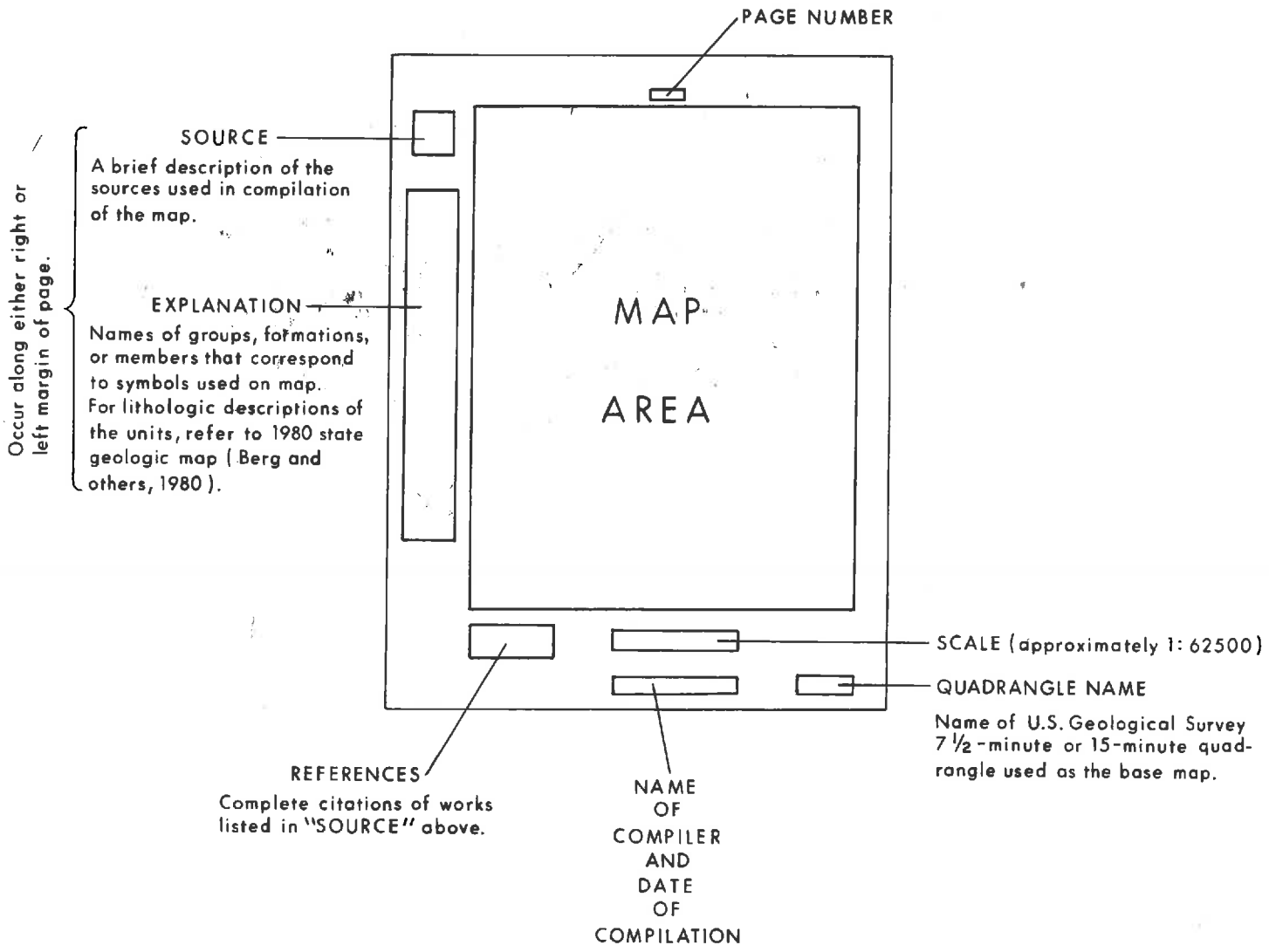


# GUIDE TO LAYOUT OF COMPILATION MAPS

UNITED STATES
DEPARTMENT OF THE INTERIOR
GEOLOGICAL SURVEY

575

TRENTON EAST QUADRANGLE
NEW JERSEY–PENNSYLVANIA
7.5 MINUTE SERIES (TOPOGRAPHIC)
NW/4 BORDENTOWN 15' QUADRANGLE

SOURCE

U.S.G.S. I-884 and Prof. Paper 1067-D

EXPLANATION

Qt
Trenton Gravel

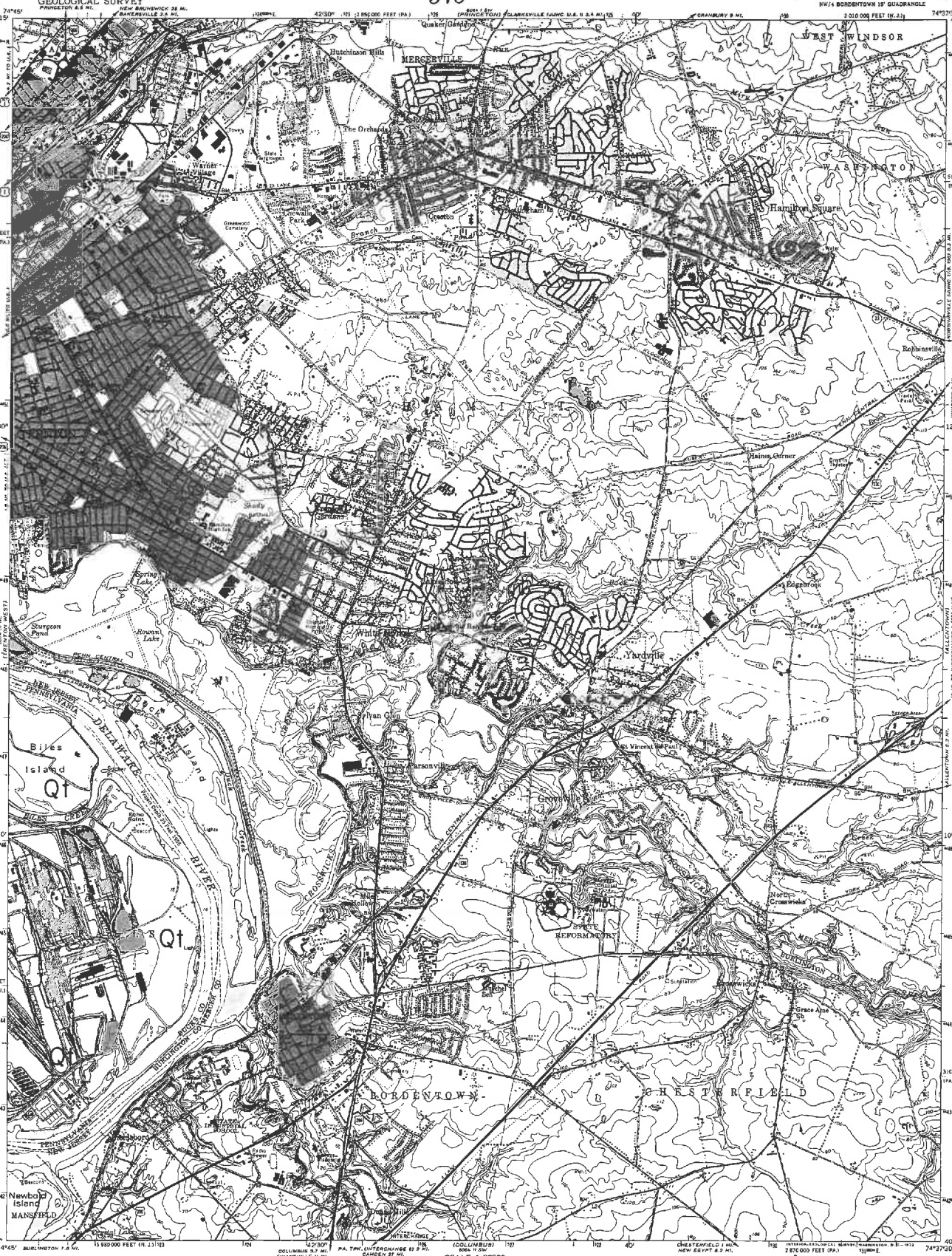


## REFERENCES


Owens, J. P., and Minard, J. P. (1975), *Geologic map of the surficial deposits in the Trenton area, New Jersey and Pennsylvania*, U. S. Geological Survey Miscellaneous Geologic Investigations Map I-884.

_____ (1979), *Upper Cenozoic sediments of the lower Delaware Valley and the northern Delmarva Peninsula, New Jersey, Pennsylvania, Delaware, and Maryland*, U. S. Geological Survey Professional Paper 1067-D, p. D1-D47.


SCALE 1:62500

1 MILE — 1000 0 1000 2000 3000 4000 5000 6000 7000 FEET — 1 KILOMETER

CONTOUR INTERVAL 10 FEET
DATUM IS MEAN SEA LEVEL
DEPTH CURVES AND SOUNDINGS IN FEET—DATUM IS MEAN LOW WATER
SHORELINE SHOWN REPRESENTS THE APPROXIMATE LINE OF MEAN HIGH WATER
THE MEAN RANGE OF TIDE IS APPROXIMATELY 6.3 FEET

UTM GRID AND 1970 MAGNETIC NORTH DECLINATION AT CENTER OF SHEET

ROAD CLASSIFICATION
Heavy-duty — Light-duty
Medium-duty — Unimproved dirt
U.S. Route — State Route

QUADRANGLE LOCATION

Compiled by T. M. BERG, 1978

# TRENTON EAST (N.J.-Pa.)

UNITED STATES
DEPARTMENT OF THE INTERIOR
GEOLOGICAL SURVEY

TRENTON WEST QUADRANGLE
PENNSYLVANIA—NEW JERSEY
7.5 MINUTE SERIES (TOPOGRAPHIC)

SOURCE

(4)
(2),(3),(5)
(1)

(1) U.S.G.S. I-884.
(2) U.S.G.S. Folio 167.
(3) 1960 state map compilation sheet.
(4) C 9.

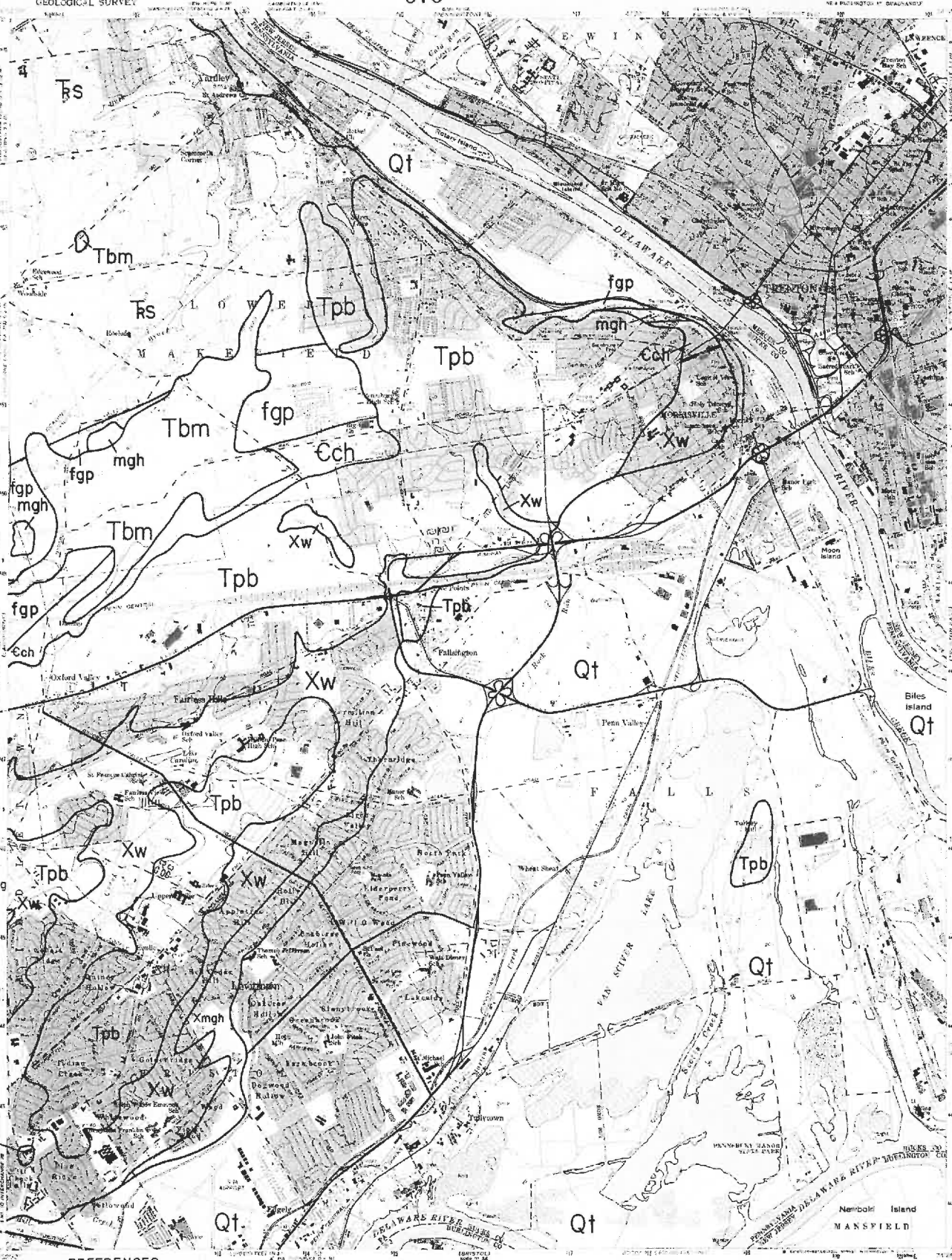


EXPLANATION

Qt
Trenton Gravel

Tpb
Pensauken and Bridgeton Fms., undif.

Tbm
Bryn Mawr Fm.

Ts
Stockton Fm.

Ꞓch
Chickies Fm.

Xmgh
Mafic gneiss, hornblende-bearing

Xw
Wissahickon Fm., oligoclase-mica schist

fgp
Felsic gneiss, pyroxene-bearing

mgh
Mafic gneiss, hornblende-bearing

REFERENCES

Bascom, F., Darton, N. H., Kummel, H. B., and others (1909), *Trenton folio, New Jersey-Pennsylvania*, U. S. Geological Survey Geologic Atlas of the U. S., Folio 167, 24 p.

Owens, J. P., and Minard, J. P. (1975), *Geologic map of the surficial deposits in the Trenton area, New Jersey and Pennsylvania*, U. S. Geological Survey Miscellaneous Investigations Map I-884.

Willard, Bradford, Freedman, Jacob, McLaughlin, D. B., and others (1959), *Geology and mineral resources of Bucks County, Pennsylvania*, Pennsylvania Geological Survey, 4th ser., County Report 9, 243 p.

SCALE 1:62500

CONTOUR INTERVAL 20 FEET
DATUM IS MEAN SEA LEVEL

ROAD CLASSIFICATION
Hard-surface — Light-duty; Medium-duty
Unimproved dirt
U.S. Route; State Route

Compiled by A. A. SOCOLOW and T. M. BERG, 1978

# TRENTON WEST (Pa.-N.J.)

APPENDIX D-11

STRUCTURAL CALCULATIONS

# Structural Calculations
# Containments
# Elcon Recycling Facility
# Falls Township, PA

Prepared By:

IES Engineers
1720 Walton Road
Blue Bell, PA 19422
IES Project No. EG151065

Albert P. Popoli
PA P.E. No. 35446

COMMONWEALTH OF PENNSYLVANIA
REGISTERED PROFESSIONAL
ALBERT PETER POPOLI
ENGINEER
NO. 35446-E

1/6/2017

**Table of Contents**


| | Page No. |
|---|---|
| Scope | A2 |
| Technical References | A2 |
| Project References | A2 |
| Design Criteria | A2 |
| Seismic Criteria | A3 – A7 |
| Geotechnical Recommendations | A8 |
| Project Approach | A8 |
| Summary | A8 |
| Wall Design – General | W1 – W2 |
| 12 inch Wall | W3 – W5 |
| 8 inch Wall | W6 – W7 |
| Tank Containment Mat Design | |
| Area 5 Loading | M1 |
| Area 6 Loading | M2 |
| Area 11 Loading | M2 |
| Area 7 Loading | M3 |
| Saddle Supported Tank Loading | M4 |
| Seismic – Areas 5, 6, 7, 11 | M5 – M6 |
| Wind on Containments 5, 6, 7, 11 | M7 |
| Standard Mat Design | M8 |
| Conclusions | M9 |
| Truck Unloading Slab (Area 9) | T1 – T3 |
| Process Building Mat | P1 – P3 |
| Warehouse Foundation and Slab | S1 – S3 |
| Perimeter/Security Wall | R1 – R27 |

**Geotechnical Recommendations**

The Report offered two options for support: Ground Improvement or 30 ton timber piles. An economic analysis by Contractors will determine which system is used. All buildings and containments will be supported by the selected system.

The allowable soil bearing for ground improvement is 6000 pounds per square foot. The equivalent average soil bearing for piles spaced at three feet on center is 30(2000)/(3x3) = 6667 psf. These equivalent bearing pressures are within eleven percent, a design based on soil bearing will be conservative provided the mat is thick enough to resist punching shear for a fully loaded pile.

Groundwater was measured at (-15 feet) below grade (El. 3.0). The 100 year flood (El. 16.8) level is below the bottom of the lowest containment mat.

**Project Approach**

Design walls and mats for containment. Wall heights were established by the Containment Calculations. Determine the minimum required concrete thickness and reinforcing.

Wall designs will be based on a fluid level at the top of the wall, regardless of the calculated spill depth. Mat designs will be based on either the spill load or the typical operating condition. Differential settlement within the mat shall also be considered.

Wind or seismic loads will be applied for the tank farm containments. Given the large width of the foundations, overturning from lateral loads is expected to be minimal.

**Summary**

Minimum wall and mat thicknesses and reinforcing have been established for the containments and the building foundations that also serve as containments. Other factors (frost protection, pipe racks, final vendor loads) may require an increase the wall/mat thickness or reinforcing.

Seismic and wind were considered for tank farms, the effects had no impact on the final design. Seismic and wind forces for the main process building may require an increase in mat thickness or reinforcing beyond that required by the containment criteria.

A3

# USGS Design Maps Summary Report

## User-Specified Input

**Building Code Reference Document** 2006/2009 International Building Code
(which utilizes USGS hazard data available in 2002)

**Site Coordinates** 40.17°N, 74.76°W

**Site Soil Classification** Site Class D – "Stiff Soil"

**Occupancy Category** I/II/III

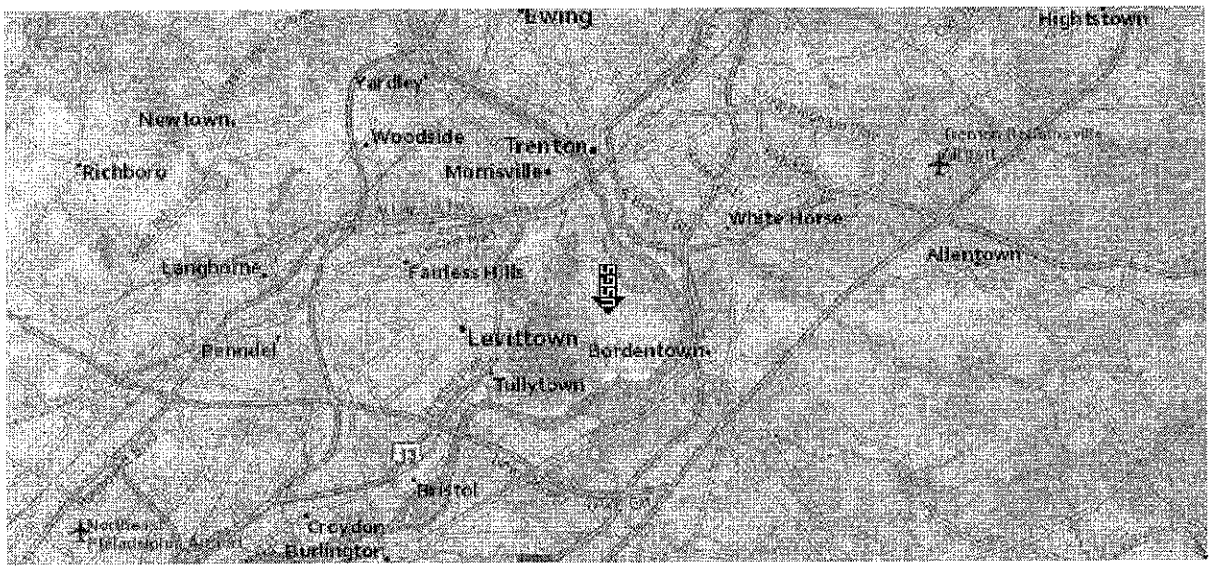


## USGS-Provided Output

| | | | | | |
|---|---|---|---|---|---|
| $S_S$ = | 0.286 g | $S_{MS}$ = | 0.449 g | $S_{DS}$ = | 0.299 g |
| $S_1$ = | 0.062 g | $S_{M1}$ = | 0.148 g | $S_{D1}$ = | 0.099 g |

**MCE Response Spectrum**

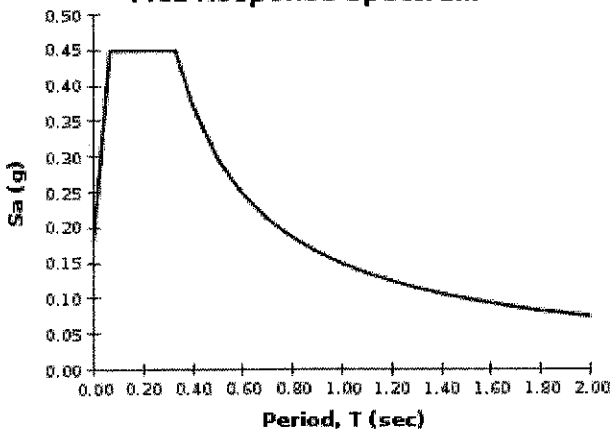


**Design Response Spectrum**

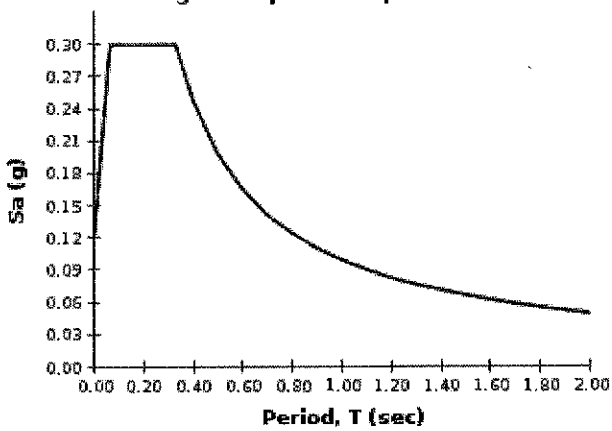


Although this information is a product of the U.S. Geological Survey, we provide no warranty, expressed or implied, as to the accuracy of the data contained therein. This tool is not a substitute for technical subject-matter knowledge.

A4

# USGS Design Maps Detailed Report

## 2006/2009 International Building Code (40.17°N, 74.76°W)

Site Class D – "Stiff Soil", Occupancy Category I/II/III

## Section 1613.5.1 — Mapped acceleration parameters

Note: Maps in the 2006 and 2009 International Building Code are provided for Site Class B. Adjustments for other Site Classes are made, as needed, in Section 1613.5.3.

**From Figure 1613.5(1)** [1] $S_S = 0.286$ g

**From Figure 1613.5(2)** [2] $S_1 = 0.062$ g

## Section 1613.5.2 — Site class definitions

| SITE CLASS | SOIL PROFILE NAME | Soil shear wave velocity, $\bar{v}_s$, (ft/s) | Standard penetration resistance, $\bar{N}$ | Soil undrained shear strength, $\bar{s}_u$, (psf) |
|---|---|---|---|---|
| A | Hard rock | $\bar{v}_s > 5{,}000$ | N/A | N/A |
| B | Rock | $2{,}500 < \bar{v}_s \leq 5{,}000$ | N/A | N/A |
| C | Very dense soil and soft rock | $1{,}200 < \bar{v}_s \leq 2{,}500$ | $\bar{N} > 50$ | >2,000 psf |
| D | Stiff soil profile | $600 \leq \bar{v}_s < 1{,}200$ | $15 \leq \bar{N} \leq 50$ | 1,000 to 2,000 psf |
| E | Stiff soil profile | $\bar{v}_s < 600$ | $\bar{N} < 15$ | <1,000 psf |
| E | — | Any profile with more than 10 ft of soil having the characteristics:<br>1. Plasticity index $PI > 20$,<br>2. Moisture content $w \geq 40\%$, and<br>3. Undrained shear strength $\bar{s}_u < 500$ psf | | |
| F | — | Any profile containing soils having one or more of the following characteristics:<br>1. Soils vulnerable to potential failure or collapse under seismic loading such as liquefiable soils, quick and highly sensitive clays, collapsible weakly cemented soils.<br>2. Peats and/or highly organic clays ($H > 10$ feet of peat and/or highly organic clay where $H$ = thickness of soil)<br>3. Very high plasticity clays ($H > 25$ feet with plasticity index $PI > 75$)<br>4. Very thick soft/medium stiff clays ($H > 120$ feet) | | |

For SI: 1ft/s = 0.3048 m/s 1lb/ft² = 0.0479 kN/m²

A5

## Section 1613.5.3 — Site coefficients and adjusted maximum considered earthquake spectral response acceleration parameters

TABLE 1613.5.3(1)
VALUES OF SITE COEFFICIENT $F_a$

| Site Class | Mapped Spectral Response Acceleration at Short Period | | | | |
|---|---|---|---|---|---|
| | $S_S \leq 0.25$ | $S_S = 0.50$ | $S_S = 0.75$ | $S_S = 1.00$ | $S_S \geq 1.25$ |
| A | 0.8 | 0.8 | 0.8 | 0.8 | 0.8 |
| B | 1.0 | 1.0 | 1.0 | 1.0 | 1.0 |
| C | 1.2 | 1.2 | 1.1 | 1.0 | 1.0 |
| D | 1.6 | 1.4 | 1.2 | 1.1 | 1.0 |
| E | 2.5 | 1.7 | 1.2 | 0.9 | 0.9 |
| F | See Section 11.4.7 of ASCE 7 | | | | |

Note: Use straight-line interpolation for intermediate values of $S_S$

**For Site Class = D and $S_S$ = 0.286 g, $F_a$ = 1.571**

TABLE 1613.5.3(2)
VALUES OF SITE COEFFICIENT $F_v$

| Site Class | Mapped Spectral Response Acceleration at 1-s Period | | | | |
|---|---|---|---|---|---|
| | $S_1 \leq 0.10$ | $S_1 = 0.20$ | $S_1 = 0.30$ | $S_1 = 0.40$ | $S_1 \geq 0.50$ |
| A | 0.8 | 0.8 | 0.8 | 0.8 | 0.8 |
| B | 1.0 | 1.0 | 1.0 | 1.0 | 1.0 |
| C | 1.7 | 1.6 | 1.5 | 1.4 | 1.3 |
| D | 2.4 | 2.0 | 1.8 | 1.6 | 1.5 |
| E | 3.5 | 3.2 | 2.8 | 2.4 | 2.4 |
| F | See Section 11.4.7 of ASCE 7 | | | | |

Note: Use straight-line interpolation for intermediate values of $S_1$

**For Site Class = D and $S_1$ = 0.062 g, $F_v$ = 2.400**

A6

In the equations below, the equation number corresponding to the 2006 edition is listed first, and that corresponding to the 2009 edition is listed second.

**Equation (16-37; 16-36):** $S_{MS} = F_a S_S = 1.571 \times 0.286 = 0.449$ g

**Equation (16-38; 16-37):** $S_{M1} = F_v S_1 = 2.400 \times 0.062 = 0.148$ g

Section 1613.5.4 — Design spectral response acceleration parameters

**Equation (16-39; 16-38):** $S_{DS} = \frac{2}{3} S_{MS} = \frac{2}{3} \times 0.449 = 0.299$ g USE 0.30g

**Equation (16-40; 16-39):** $S_{D1} = \frac{2}{3} S_{M1} = \frac{2}{3} \times 0.148 = 0.099$ g USE 0.10g

A7

## Section 1613.5.6 — Determination of seismic design category

TABLE 1613.5.6(1)
SEISMIC DESIGN CATEGORY BASED ON SHORT-PERIOD RESPONSE ACCELERATION

| VALUE OF $S_{DS}$ | OCCUPANCY CATEGORY | | |
|---|---|---|---|
| | I or II | III | IV |
| $S_{DS} < 0.167g$ | A | A | A |
| $0.167g \le S_{DS} < 0.33g$ | B | B | C |
| $0.33g \le S_{DS} < 0.50g$ | C | C | D |
| $0.50g \le S_{DS}$ | D | D | D |

**For Occupancy Category = I and $S_{DS}$ = 0.299 g, Seismic Design Category = B**

TABLE 1613.5.6(2)
SEISMIC DESIGN CATEGORY BASED ON 1-SECOND PERIOD RESPONSE ACCELERATION

| VALUE OF $S_{D1}$ | OCCUPANCY CATEGORY | | |
|---|---|---|---|
| | I or II | III | IV |
| $S_{D1} < 0.067g$ | A | A | A |
| $0.067g \le S_{D1} < 0.133g$ | B | B | C |
| $0.133g \le S_{D1} < 0.20g$ | C | C | D |
| $0.20g \le S_{D1}$ | D | D | D |

**For Occupancy Category = I and $S_{D1}$ = 0.099 g, Seismic Design Category = B**

Note: When $S_1$ is greater than or equal to 0.75g, the Seismic Design Category is **E** for buildings in Occupancy Categories I, II, and III, and **F** for those in Occupancy Category IV, irrespective of the above.

Seismic Design Category ≡ "the more severe design category in accordance with Table 1613.5.6(1) or 1613.5.6(2)" = B

---

Note: See Section 1613.5.6.1 for alternative approaches to calculating Seismic Design Category.

## References

1. *Figure 1613.5(1)*: http://earthquake.usgs.gov/hazards/designmaps/downloads/pdfs/IBC-2006-Figure1613_5(01).pdf
2. *Figure 1613.5(2)*: http://earthquake.usgs.gov/hazards/designmaps/downloads/pdfs/IBC-2006-Figure1613_5(02).pdf

# WALL DESIGN - GENERAL

GENERAL: ALL WALLS ARE CANTILEVER RETAINING WALLS.

- DESIGN FOR FULL FLUID HEIGHT, NOT SPILL HEIGHT.
- DESIGN FOR WIND AND/OR SOIL LOADING WHERE APPROPRIATE.
- GROUND WATER TABLE DOES NOT EXTEND UP ABOVE BASE OF WALL.

MATERIALS

- $f_c' = 4500$ psi (USE 4000 psi TABLES); $f_y = 60$ ksi

CODES

- ASCE 7-05 / IBC 2009
- ACI 318-08, USING STRENGTH DESIGN
- ACI SP-17 (09) DESIGN AIDS

LOADS

- FLUID LOAD 62.4 pcf
- SOIL $\gamma = 125$ pcf
- WIND $V = 95$ MPH. $p$ (ASD) = 12 psf (RETAINING WALL CALCS)

LOAD COMBINATIONS (ASCE 7-05)

SECTION 2.3.2 AS APPROPRIATE

## ACI 318

WALL MIN $A_s = 0.0033$ (10.5)

COVER $-1\frac{1}{2}''$ ALLOWED - USE 2" (7.7)
(FOR 12" WALL)

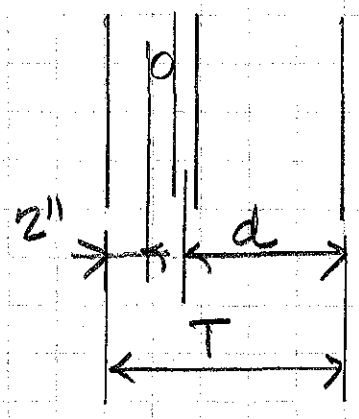


$d = T - 2 - \frac{1}{2} - \frac{1}{2} = T - 3''$

8" WALL USE $d = 8 - 1\frac{1}{2} - \frac{1}{2} - \frac{1}{2}$
$= 5.5^{IN}$

## ACI SP-17

$\phi M_N = \phi K_m F$ ; $F = bd^2/12000$

CALCULATE F, CALCULATE $\phi M_N$

READ $\rho$ FROM FLEXURE 1.6

$A_s = \rho b d$ ; USE $\rho_{MIN} = 0.0033$

## ASCE 7-05

$U = 1.4(D+F) \Rightarrow U = 1.4F$ NORMAL LOADS

$U = 1.2D + 1.6W$

## 12" WALL

MAX HEIGHT 9'-6"
NEGLECT SOIL LOADING OPPOSITE FACE (CONSIDERED LATER)

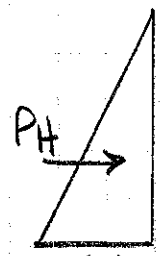


$1.4(9.5)(62.4) = 830$ psf

$P_H = 830(9.5)/2 = 3.94^k/ft.$ Say $4.0^k/ft.$

$M_u = 4(9.5)/3 = 12.7$ ft-k/ft.

$d = 12-3 = 9''$; $F = \frac{(9)^2}{100} = 0.081$

$\phi K_m = M_u/F = \frac{12.7}{.081} = 156$; $\rho = 0.0029$
$< \rho_{min}$.

USE $A_s = .0033(9)(12) = 0.36 in^2/ft.$
#5@10" ($0.37 in^2/ft.$)

ACTUAL $\rho = \frac{.37}{9(12)} = 0.0034$

FROM FIGURE 1.6, READ $\phi K_m = 176$

$\phi M_N = \phi K_m F = 176(.081) = 14.2$ ft-k/ft.

BASE SHEAR $= 4.0^k/ft.$

$\phi V_n = \phi A_{vf} f_y \mu$ (SHEAR-FRICTION, 11.6.4)
$= .75(.36)(60)(.6) = 9.7^k/ft > 4.0^k/ft.$ OK

ADD WIND PRESSURE 12psf

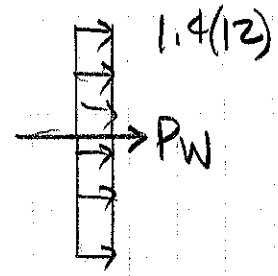


$P_W = 1.6(9.5)(.012) = 0.18^{K}/FT.$

$M_u = \frac{1.2}{1.4}(12.7) + \frac{0.18(9.5)}{2} = 11.7^{ft\text{-}K/ft} < 12.7^{ft\text{-}K/ft}$

∴ WIND CONDITION DOES CONTROL

OTHER WALL REINF

ACI 318, 14.3

MIN VERT $A_s = 0.0012(12)(12) = 0.17^{IN^2}/FT.$

#5 @10" EF PROVIDED $0.72^{IN^2}/FT.$ ✓

MIN HORIZ $A_s = 0.0020(12)(12) = 0.29^{IN^2}/FT.$

USE #4@12" EF $0.40^{IN^2}/FT.$ ✓

MISC

#5 $l_{dh}$ IN MAT: $l_{dh} = 19 d_b (.7)(f_c' = 4^{ksi}, ACI\ 12.5)$

$= 19\left(\frac{5}{8}\right)(0.7) = 8.3^{IN}$

MIN MAT THICKNESS $8.3 + 3 + 2(.75) = 12.8$ Say $13^{IN}$ OK

## SOIL LOADING

WORST CASE IS OPPOSITE AREA OF TRUCK UNLOADING.

TRUCK SURCHARGE 250 psf, $K_o = 0.47$

SOIL $\gamma = 125$ pcf, $K_a = 0.31$, USE $K_o = 0.47$

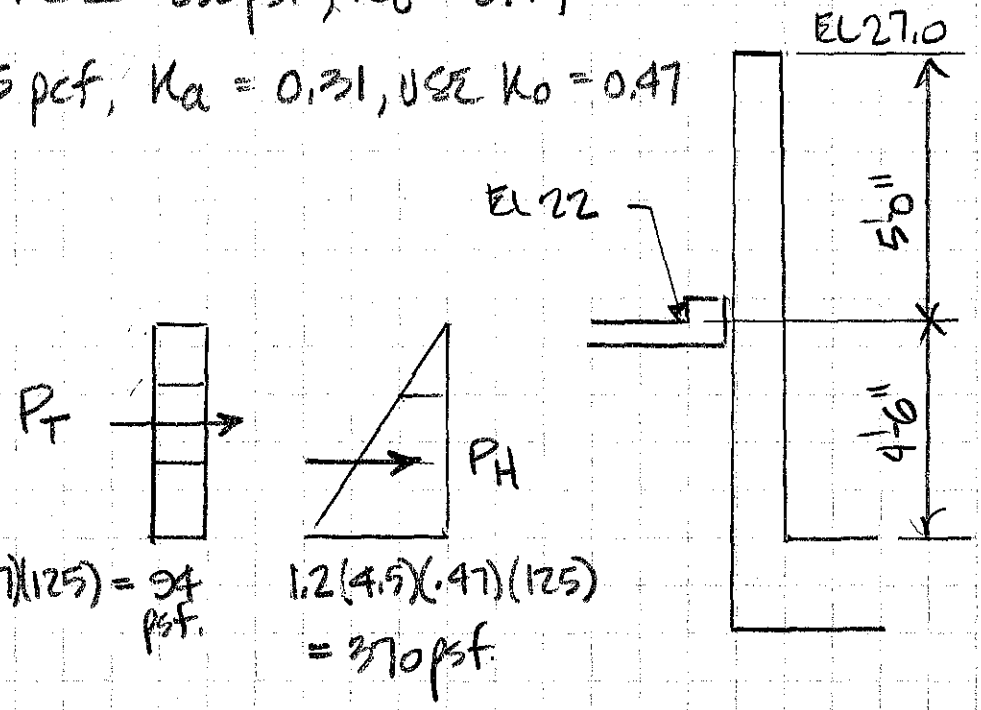


$P_T = .094(4.5) = 0.42^k/ft$; $P_H = .370(4.5)/2 = 0.83^k/ft.$

$M_u = .42\frac{(4.5)}{2} + .83\frac{(4.5)}{3} = 2.2^{ft\text{-}k}/ft. < \phi M_N = 14.2^{ft\text{-}k}/ft.$

$V_u = 0.42 + 0.83 = 1.25^k/ft. < \phi V_n = 9.7^k/ft.$ ok

CONCLUSION: CONTAINMENT DESIGN CRITERIA CONTROLS, SOIL + TRUCK SURCHARGE LOADS DON'T CONTROL.

8" WALL

MAX HEIGHT 4'-8" USE 5'0"

$P_H = .437(5)/2 = 1092$ Say $1.1^k$

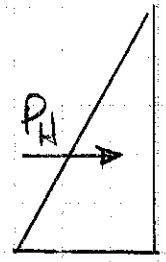


$M_u = \frac{1.1(5)}{3} = 1.83^{ft\text{-}k}$ Say $2.0^{ft\text{-}k}$

$1.4(5)(62.4) = 437^{\#}$

$d = 8" - 2\frac{1}{2} = 5\frac{1}{2}"$; $F = \frac{(5.5)^2}{1000} = 0.030$

$\phi K_n = M_u/F = \frac{2}{.030} = 67$ $\rho = 0.0015 < \rho_{MIN}$

USE $A_s = .0033(5.5)(12) = 0.22^{IN^2}$

USE #4 @12", $A_s = 0.20^{IN^2}$ E.F.

ACTUAL $\rho = \frac{0.20}{5.5(12)} = 0.00303$ $\therefore \phi K_n = 158$

$\phi M_N = \phi K_n F = 158(.030) = 4.74^{ft\text{-}k/ft.}$ (OK - MEETS EXCEPTION TO ACI 10.5 - >1.33X REQ'D)

BASE SHEAR $= 0.70^{k/ft.}$

$\phi V_n = 0.75(.2)(60)(.6) = 5.4^{k/ft.} > 1.1^k$ OK.

WIND PRESSURE CHECK NOT REQ'D - SEE CALCS FOR 12" WALL.

## OTHER WALL REINF

ACI 318, 14.3

MIN VERT $A_s = 0.0012(8)(12) = 0.17\ IN^2/FT.$

#4 @ 12" EF PROVIDED $0.40\ IN^2/FT$ ✓

MIN HORIZ $A_s = 0.0020(8)(12) = 0.19\ IN^2/FT.$

#4 @ 12" EF $0.40\ IN^2/FT.$ ✓

## MISC

# $l_{dh} = 19 d_b (.7) = 19(.5)(.7) = 6.65^{IN}$ IN MAT.

MINIMUM MAT THICKNESS $6.65 + 3 + 2(.75) = 11.15"$

Say 12" MIN.

WALL DEVELOPMENT IN CORNERS

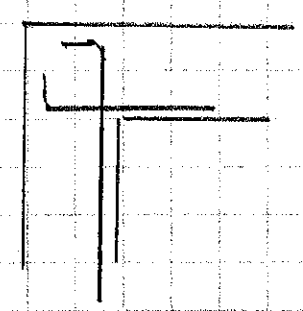

$l_{dh} = 6.65$ FOR $f_c' = 4000$ psi

USING 4500 psi

$$l_{dh} = \frac{0.02 \psi_e f_y}{\lambda \sqrt{f_c'}} d_b$$

$$= \frac{0.02(1)(60000)}{1\sqrt{4500}} d_b = 17.9 d_b \times 0.7$$

$= 6\frac{1}{4}"$

AVAILABLE

$8 - 1\frac{1}{2} - \frac{1}{2} = 6"$

ACCEPT - 96%,

TANK AREA MATS

$\gamma = 8.34$ #/GAL

AREA (5)

10% ALLOWANCE, TANK DL

T-20402 32000 GAL, $W = 1.1\,\frac{(32000)(8.34)}{1000} = 294$ say 300$^k$

$W = \frac{300}{\pi(7.5)^2} = 1.7$ ksf (DIRECTLY BELOW TANK)

TANK IS ON PIERS, LOAD/PIER = 300/6 = 50$^k$

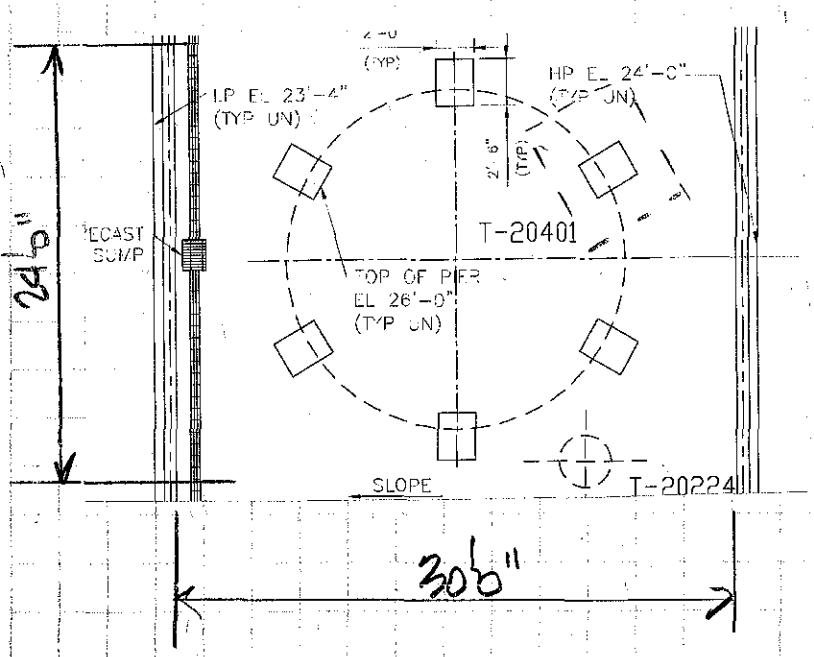


$P_u = 1.4(50) = 70^k$

CONSIDER LOCAL FND @ EACH PIER.

$A_{MIN} = \frac{50}{6} = 8.33$ SF

2.88 say 3x3' ⊡

$W_u = \frac{70}{9} = 7.8$ ksf

$M_u = \frac{7.8(.5)^2}{2}$

$= 1.0$ ft-k/ft.

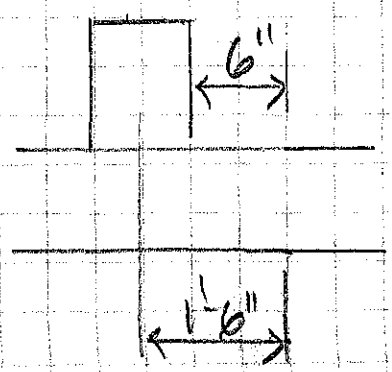


CONCLUSION: MOST LOAD CARRIED DIRECTLY IN AREA OF PIER, MINIMAL FLEXURE IN MAT.

AREA (6)

T-12101 26539 GAL $W = 1.1\frac{(26539)(8.34)}{1000} = 244$ say 250k

$W = \frac{250}{\pi(6)^2} = 2.21$ ksf (TANK DIAMETER)

$W = \frac{250}{.828(15.1)^2} = 1.32$ ksf (PAD AREA)

T-80160 11183 GAL $W = 1.1\frac{(11183)8.34}{1000} = 103$ say 110k

$W_{DIST} = \frac{110}{.828(15.2)^2} = 0.58$ ksf (PAD AREA)

AREA (11)

T-90235 110,000 GAL $W = \frac{1.1(110000)(8.34)}{1000} = 1000^k$

$W = \frac{1000}{\pi(10)^2} = 3.2$ ksf (TANK DIA)

$W = \frac{1000}{.828(23)^2} = 2.3^{ksf}$ (PAD AREA)

9/9/16

EFFLUENT TANKS - 4 - 110,000 GAL

$W = 4(1.1)(110,000)8.33/1000 = 4032$ (TN DL); $q_{avg} = \frac{W}{4\theta(92.5)} = 0.90^{ksf}$

$q = \text{TANK PAD} = \frac{4032}{4(.828)(23)^2} = 2.3$ ksf

SIMILAR TO OTHER TANKS

OK

## AREA (7)

T-ALL - 135764 GAL, $W = \frac{1.1(135764)8.34}{1000} = 124.5$ Say 125K

$W = \frac{1250}{\pi(10.5)^2} = 3.6$ ksf (TANK DIA)

$W = \frac{1250}{.828(23)^2} = 2.85$ ksf (PAD AREA)

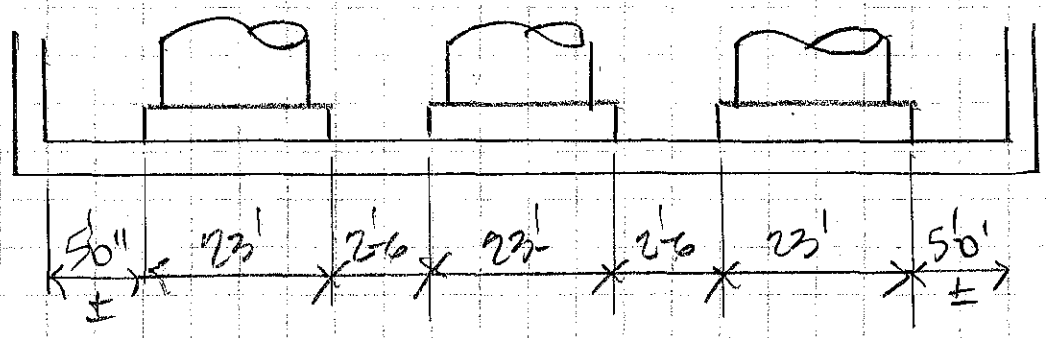


IF UNIFORM DISTRIBUTION

$W = \frac{3(1250)}{25(84.)} = 1.78$ Say 1.8 ksf.

APROX $M_u$ (CONSIDER AS CANTILEVER)

$= 1.4\frac{(1.8)(1.25)^2}{2} = 2.0$ K-W/FT (NEGLIGIBLE)

SADDLE-SUPPORTED TANKS

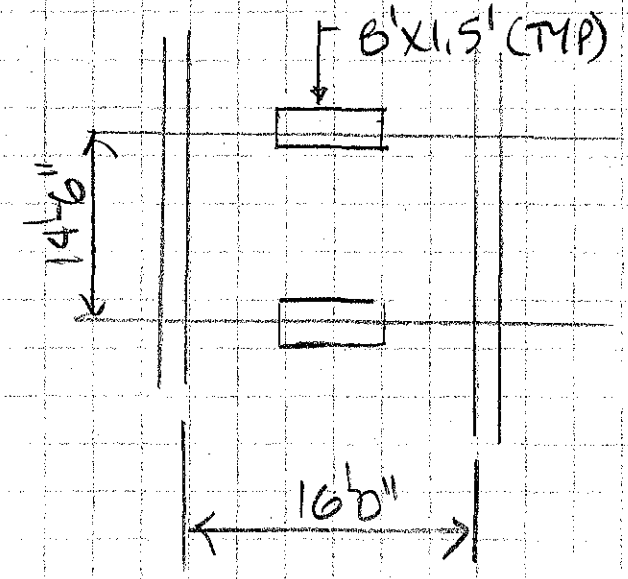


SOLVENT TANKS AREA
T-23100, etc

13277 GAL.

FUEL OIL TANK TO SOUTH
SIMILAR - 8000 GAL

$W = 1.1 \frac{(13277)\,8.34}{1000}$

$= 121.8$ Say $124^k$

LOAD/PIER $62^k$

REQ'D SUPPORT AREA $= \frac{62}{6} = 10.3$ SF

PIER IS $8(1.5) = 12$ SF ∴ MINIMAL LOAD DIST OUTBOARD OF PIER.

SEISMIC - CONTAINMENTS 5, 6, 7, 11

REF ASCE 7-05 CHAPTER 15.

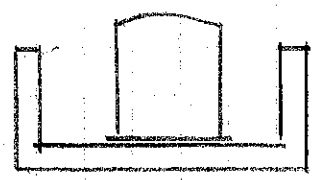

15.7.6 → USE 15.4.2:

$V = 0.30 S_{DS} W I$

$= 0.30(.30) W I = 0.09W$

CHECK TYPICAL SECTIONS

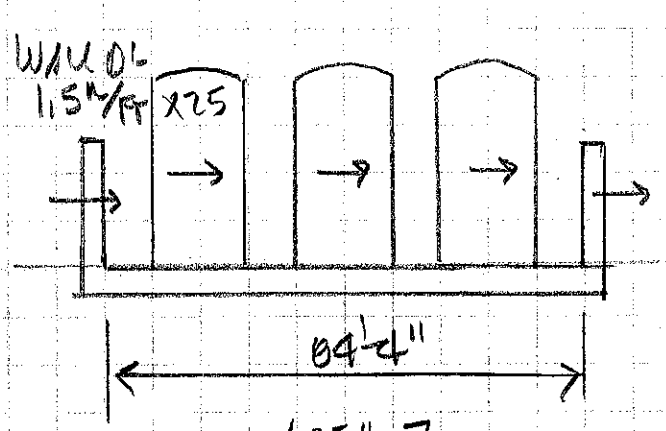


AREA 7
T-20120-A, 121A, 122A
25' WIDE
SECTION

TANK + CONTENTS 125K EACH

$V_{TANK} = .09(125) = 11.3^K$ EACH

$V_{WALL} = .09(1.5)(25) = 3.4^K$ EACH.

$\Sigma V = 3(11.3) + 2(3.4)$

$= 40.7^K$

$OTM = 3(11.3)(20) + 2(3.4)(5)$

$= 712^{ft\text{-}K}$

ASCE 7 LOAD COMB CHAPTER 2.4 : D + 0.7E

$\Sigma DL = 3(125) + 2(1.5)(25) = 450^K$

SLIDING FOS $= \dfrac{450(.35)}{.7(40.7)} = 5.5 > 1.5$ (FRICTION ONLY - NEGLECTS PASSIVE PRESSURE)

SUBJECT ELCAL SHEET# OF
BY [illegible] DATE 7/27/2016
PROJECT#

OVERTURNING: $e = \frac{.7(712)}{450} = 1.1$ ft

BASE WIDTH $84'4'' + 3 = 87.33'$

$$q_{max} = \frac{450}{87.33(.25)}\left[1 + \frac{6(1.1)}{87.33}\right]$$

$$= 0.21\,[1.08] = 0.23 \text{ ksf}$$ (NEGLIGIBLE AS PREDICTED)

## SEISMIC DETAILING

CHECK IBC & ACI 318 FOR SDC B REQUIREMENTS

IBC SECT 1907 - NO ISSUES
IBC SECT 1908 - NO ISSUES
ACI 318 - CHAPTER 21 - EARTHQUAKE RESISTANCE
21.1.1.4: MEET 21.1.2 (OK - COMPLIES)
21.1.1.7: ORDINARY REINF CONC WALLS ARE EXEMPT (ALL TANK CONTAINMENTS)
ALL OTHER CHAPTER 21 PROVISIONS NOT APPLICABLE

CONCLUSION: NO SPECIAL SEISMIC DETAILING REQUIRED.

SUBJECT ELCON SHEET# OF
BY [illegible] DATE 7/28/2016
PROJECT#

WIND ON TANK CONTAINMENTS 5, 6, 7, 11

CHECK AREA 7 - TALLEST TANKS - WORST CASE FOR PROJECT.

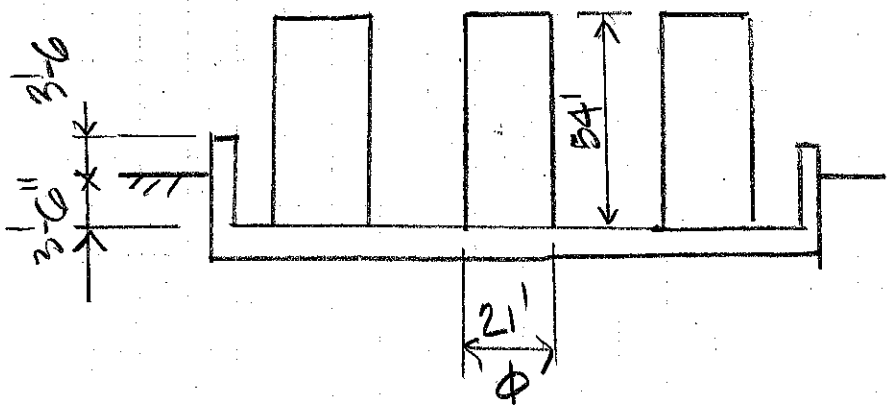


V = 95 MPH, EXP C

$q_z$ = 12 psf (FROM RETAINING WALL CALCS) Ch = 15'

F = 15 psf ON WALLS (RETAINING WALL CALCS)

DEVELOP WIND LOADS ON TANKS

$K_z$ VARIES WITH HEIGHT, 0.57 TO 0.85. FOR SIMPLICITY USE $K_z$ = 0.76 (h = 40') OVER ENTIRE TANK.

$q_z = 0.00256(.76)1(.85)(95)^2 1.0 = 14.95$ say 15 psf.

$F = q_z G C_f A_f$. $G = 0.85$ $C_f = 0.6$

$= 15(.85)(0.6)\,21(54) = 8675$ #/TANK.

$\Sigma F = 3(8675) + 3.5(15)(2)(25) = 28.65^k$/25' WIDE SECTION.

COMPARE TO SEISMIC ON SAME AREA

$V_{SEISMIC} = 0.7(40.7) = 28.5^k$/25' SECTION (ASD)

CONCLUSION - WIND WILL NOT CONTROL DESIGN - SEE DETAILED ANALYSIS FOR SEISMIC.

STD MAT DESIGN - AREAS 5,6,7,11

ALL PRESSURES ARE < ALLOWABLE BEARING OF 6 KSF.

MAT DOESN'T NEED TO DISTRIBUTE LOAD LATERALLY IN FLEXURE.

USE 18" MIN MAT W/ $A_s$ MIN = .0018bh T&B

$A_s = .0018(12)(18) = 0.39 \text{ IN}^2/\text{FT}$. USE #6@12" EW T&B (0.44)

$d = 18 - 3 - 1 = 14''$; $F = \frac{14^2}{1000} = 0.196$

$\rho = \frac{0.44}{12(14)} = 0.0026$; $\phi K_M = 138$

$\phi M_N = \phi K_M F = 27 \text{ K-IN/FT}$.

ASSUMING 3/8" DIFFERENTIAL SETTLEMENT OVER 30'

$M = \frac{6EI\Delta}{l^2}$ $E_{CONC} = 57000\sqrt{f_c'}$

$= 3.8 \times 10^6$ PSI

$I_{GROSS} = \frac{12(18)^3}{12} = 5832 \text{ IN}^4$

USE $I_{CRACKED} = I_G/2 = 2916 \text{ IN}^4$

$M = \frac{6(3.8\times10^3)(2916)(.375)}{(30)^2\,1728} \frac{\text{K/IN}^2 \cdot \text{IN}^2 \cdot \text{IN FT}^3}{\text{FT}^2 \cdot \text{IN}^3}$

$= 16 \text{ K-IN} \times 1.4 = M_u = 22.5 \text{ K-IN} < \phi M_N$ OK

CONCLUSIONS - AREAS 5, 6, 7, 11

- FLEXURAL LOADS ON MAT ARE MINIMAL FOR NORMAL LOADING CONDITIONS.
- PROVIDE 18" MIN MAT W/ #6 @ 12" EW T & B. A THICKER MAT MAY BE REQUIRED TO PROVIDE 3'-0" FROST DEPTH.
- 18" MAT CAN ACCOMODATE 3/8" DIFFERENTIAL SETTLEMENT OVER 30 FT.
- WIND AND SEISMIC LOADS HAVE MINIMAL IMPACT ON OVERALL MAT DESIGN. MAT PADS WILL NEED TO BE EVALUATED FOR ANCHOR BOLT LOADING UNDER WIND OR SEISMIC, AFTER VENDOR INFORMATION IS AVAILABLE.

TRUCK UNLOADING (AREA 9)

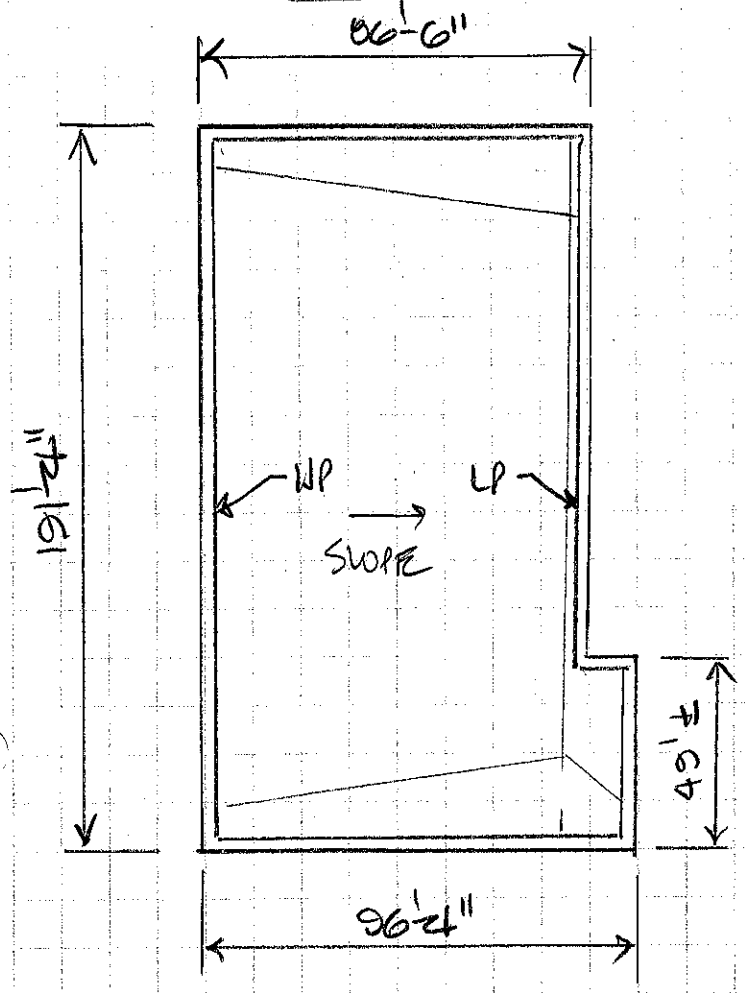


SLAB THICKNESS:

6"–7" (1984 CRSI)

EB075,

H20 TRUCK LOAD

32" AXLE LOAD

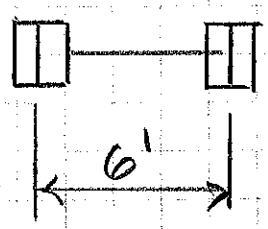


CONTACT AREA 200 IN²

FIG 5-4

S = 72", K = 200 pci

CALCULATE CONC FLEXURAL STRENGTH

$MR = 640\,psi$ ($f_c' = 5000\,psi$, TABLE 4-6b)

$WS = \frac{MR}{SF \times JF} = \frac{640}{2.2(1.6)}$ USE SF = 2.2, JF = 1.6

$= 182\,psi$

STRESS/1000# AXLE LOAD $= \frac{182}{32} = 5.7\,psi$

USING FIG 5-4, T = 10" – USE 8" MIN (EXPERIENCE)

JOINTS.

L < 200' ∴ NO EXPANSION JOINTS

EB075 TABLE 6-1b - 20' SPACING - CONTROL JOINTS

SUBGRADE FORMULA - 86.5/3 = 28.8' } INCREASED JOINT SPACING
191.33/7 = 27.33 } USE 30' MAX

$$A_s = \frac{FLW}{2f_s}$$

$$= \frac{2(30)100}{2(.67)(60000)} = 0.075\ \text{IN}^2/\text{FT}$$

USE #3 @12" (0.11 IN²/FT).

CURB

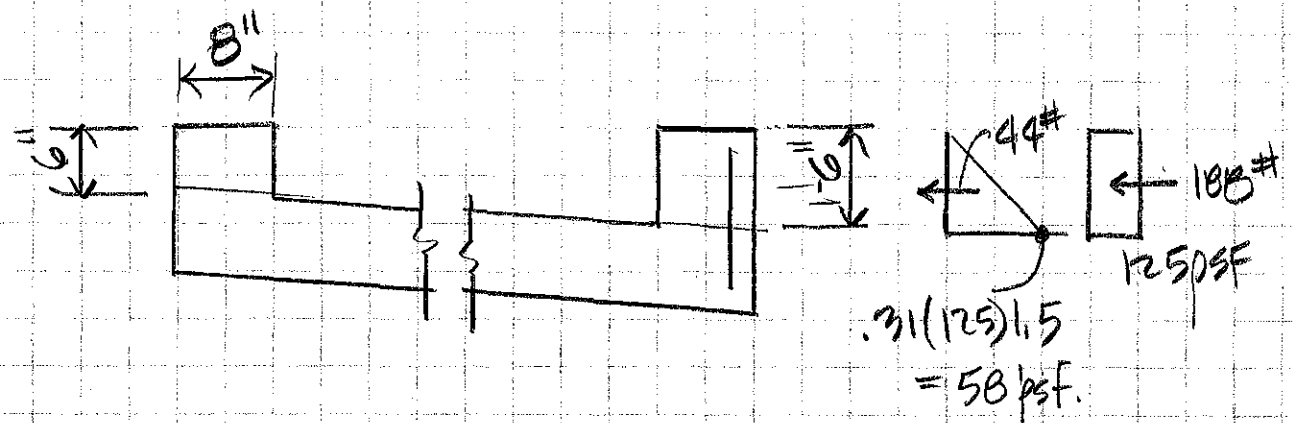


TALL CURB IN FLEXURE FROM SOIL + SURCHARGE

$$M_u = 1.4(44) + 1.7(188) = 0.38\ \text{ft-K/ft.}$$

$$d = 8 - 2 - 1/2 = 5\tfrac{1}{2}" \quad F = \frac{bd^2}{12000} = 0.03$$

$$K_n = M_u/F = 13, \quad a_n = 4.45$$

$$A_s = \frac{M_u}{d a_n} = \frac{0.38}{5.5(4.45)} = 0.02\ \text{IN}^2/\text{FT.} \quad \#3\ @12"\ \text{MIN.}$$

MIN WALL REINF (CURBS) ACI 318 CHAP 14

LOW CURB (6" HIGH)

$A_{s\,HOR} = .0020(8)(6) = 0.10^{IN^2}$ - USE 2-#3

$A_{s\,VERT} = .0012(8)(12) = 0.12^{IN^2}$ - USE 2-#3

HIGH CURB (18" HIGH) 3X SHORT CURB

$A_{s\,HORIZ} = 3(.10) = 0.30^{IN^2}$ 4-#3 $(0.44^{IN^2})$

$A_{s\,VERT} = 3(.12) = 0.36^{IN^2}$ 4-#3 $(0.44^{IN^2})$

MAX CURB HEIGHT FOR 2-#3

$.0020(8)h = 0.22$

$h_{MAX} = 12.5^{IN}$ Say 9"

# PROCESS BLDG FND

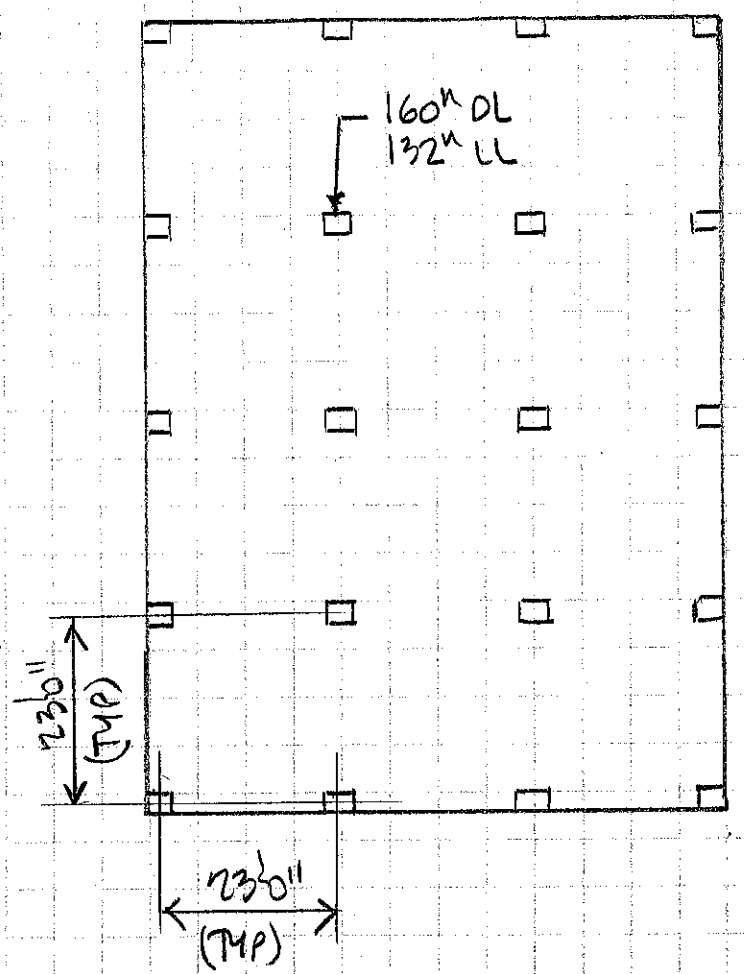


TYPICAL COLUMN LOADS SUPPLIED BY CLIENT.

FOR AN INTERIOR COLUMN

$$q_{avg} = \frac{160+132}{(23)^2}$$

$= 0.55$ ksf +
$0.25$ ksf GROUND FLR LL

$0.80$ ksf.

$< 6.0$ ksf

$$W_u = \frac{1.2(160)+1.6(132)}{(23)^2}$$

$= 0.76$ ksf. $+ 1.6(.250)$

$= 1.16$ ksf.

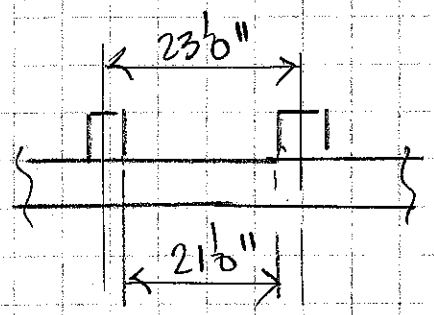


DESIGN FOR 1.5 ksf.

USE $-M_u = \frac{W l^2}{9}$ (END SPAN)

$= \frac{1.5(21)^2}{9} = 74$ f-k/ft.

BEAM SHEAR $V_u = \frac{1.5(21.0)}{2}(1.15) = 18.1^k$/ft.

ASSUME ONE-WAY SLAB (CONSERVATIVE)

TRY 24" MIN MAT $d = 24-3-1 = 20''$; $F = \frac{(20)^2}{1000} = 0.40$

$\phi K_n = M_u/F = 74/0.40 = 185$; $\rho = 0.0036$

$A_s = .0036(12)(20) = 0.86^{IN^2}/FT.$ #8 @ 11" #7 @ 8"

TRY 30" MIN MAT $d = 30-3-1 = 26''$; $F = \frac{(26)^2}{1000} = 0.676$

$\phi K_n = 74/.676 = 110$; $\rho = 0.0021$

$A_s = .0021(12)(26) = 0.66^{IN^2}/FT.$ #7 @ 10" #6 @ 8" BOTTOM

$+M = \frac{wl^2}{11} = \frac{1.5(21)^2}{11} = 60^{F-K}$

$\phi K_n = M_u/F = 60/.676 = 89$; $\rho = .0017$

$A_s = .0017(12)(26) = 0.53^{IN^2}/FT.$ #7 @ 12" #6 @ 10" TOP

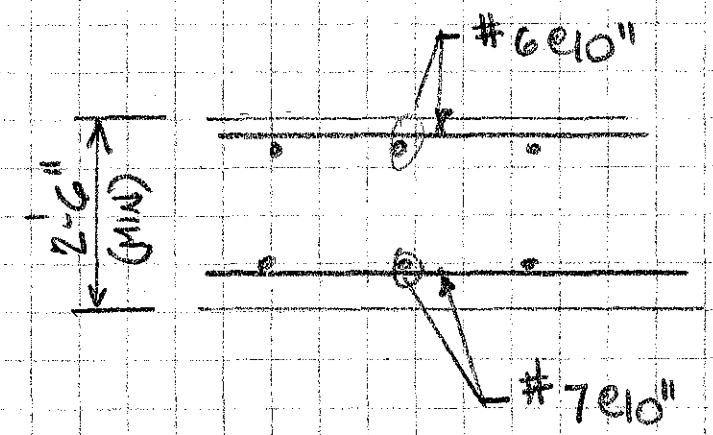


$\phi V_c = 0.75(2)\sqrt{\frac{4000}{1000}}(26)(12) = 29.6^K > V_u = 18.1^K/FT.$ OK

# PILE CHECK - PUNCHING SHEAR

$$\phi V_c = \phi 4 \sqrt{f'_c}\, b_o d$$

12"$\phi$ PILE BUTT, ASSUME $d$ = 12" MIN.
($h$ = 12+6 = 18")

$r = 6'' + 6 = 12''$

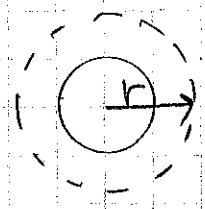


$$\phi V_c = .75(4)\sqrt{\frac{4500}{1000}}\, 2\pi(12)(12) = 181^K$$

30 TON PILE, ASSUME 33% DL, 67% LL

$$P_u = 1.2(.33)(60) + 1.6(.67)(60) = 88^K$$

$\phi V_c > P_u$ ∴ 18" MIN MAT REQUIRED FOR PILE-SUPPORTED MAT

## WAREHOUSE SLAB

SLAB-ON-GRADE, DESIGN FOR 500 psf.

REF: GILMORE & ASSOC GEOTECH REPORT 5/26/2016
SECT 6.5
FOR GROUND-SUPPORTED SLAB, USE K = 250 psi/INCH

REF: 1984 CRSI MANUAL, CHAP 13
6" SLAB W/ WWF 6X6

REF: PCA, "CONCRETE FLOORS ON GROUND" EB075 2001

DESIGN USING PROCEDURES IN PCA MANUAL, WITH 6" (MIN) SLAB.

REF EB075, CHAPTER 6

TABLE 6-1b 12-15' CONTROL JOINT SPACING GENERAL RECOMMENDATION.

REF PG 60. USE SUBGRADE DRAG FORMULA TO INCREASE JOINT SPACING.

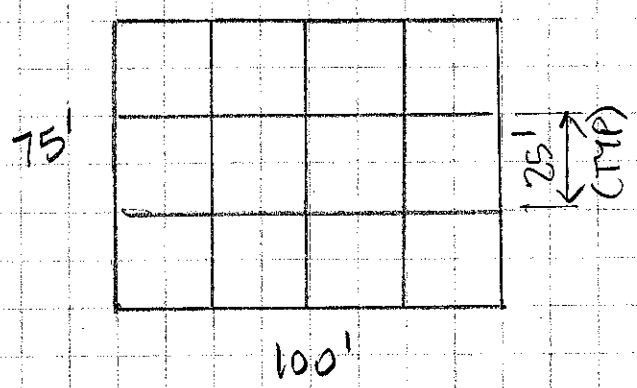


PLAN WITH NO JOINTS

$$A_s = \frac{FLW}{2f_s}$$

$$= \frac{1.5(25)75}{2(.75)60000}$$

$$= 0.031 \text{ IN}^2/\text{FT.}$$

$A_s = 0.031 \times 4 = 0.124 \text{ IN}^2/\text{FT.}$ #3 @ 10" (0.13 IN²/FT.)

USE #3 @ 12" EW W/ JOINTS @ 25'

WAREHOUSE FND

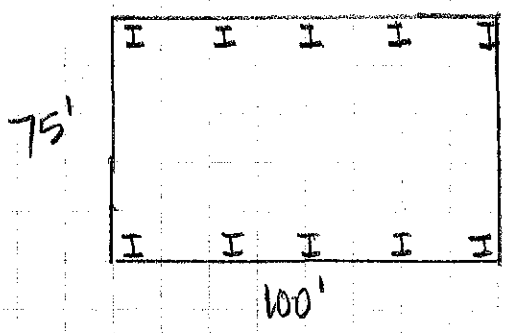


ESTIMATED LOADS 20$^k$ DEAD
20$^k$ LIVE
(INTERIOR)

$A_{MIN} = \frac{40}{6} = 6.67^{SF}$

3X3' SPREAD FTG, OR

CONTINUOUS FOOTING 24$^{IN}$ MIN WIDTH.

$W = \frac{40}{25(2)} = 0.80$ ksf - OK

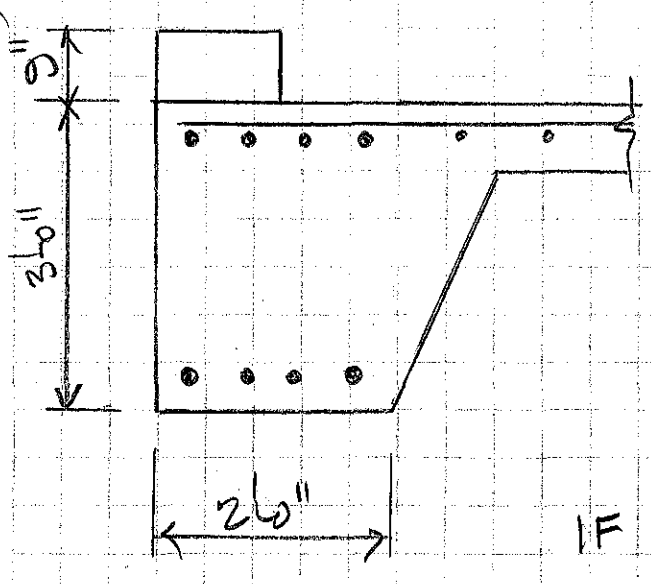


GRADE BEAM (ASSUME PILES)

$A_{s\,MIN} = .0018bd$

$= .0018(24)(36-3-1)$

$= 1.56^{IN^2}$

4 - # 6 (2.64)

IF PILE SUPPORTED, 4" PILE EMBED

$d = 32 - 2 = 30''$

$\phi V_c = 0.75(4)\frac{\sqrt{4500}}{1000}(24)(30) = 145^k > 1.7(30\text{ TONS})2$

$= 102^k$ OK.

WITH WIDTH & DEPTH OK FOR 30 TON TIMBER PILE.

SUBJECT ELCON WAREHOUSE
SHEET# OF
BY APPadu DATE 7/7/2016
PROJECT#

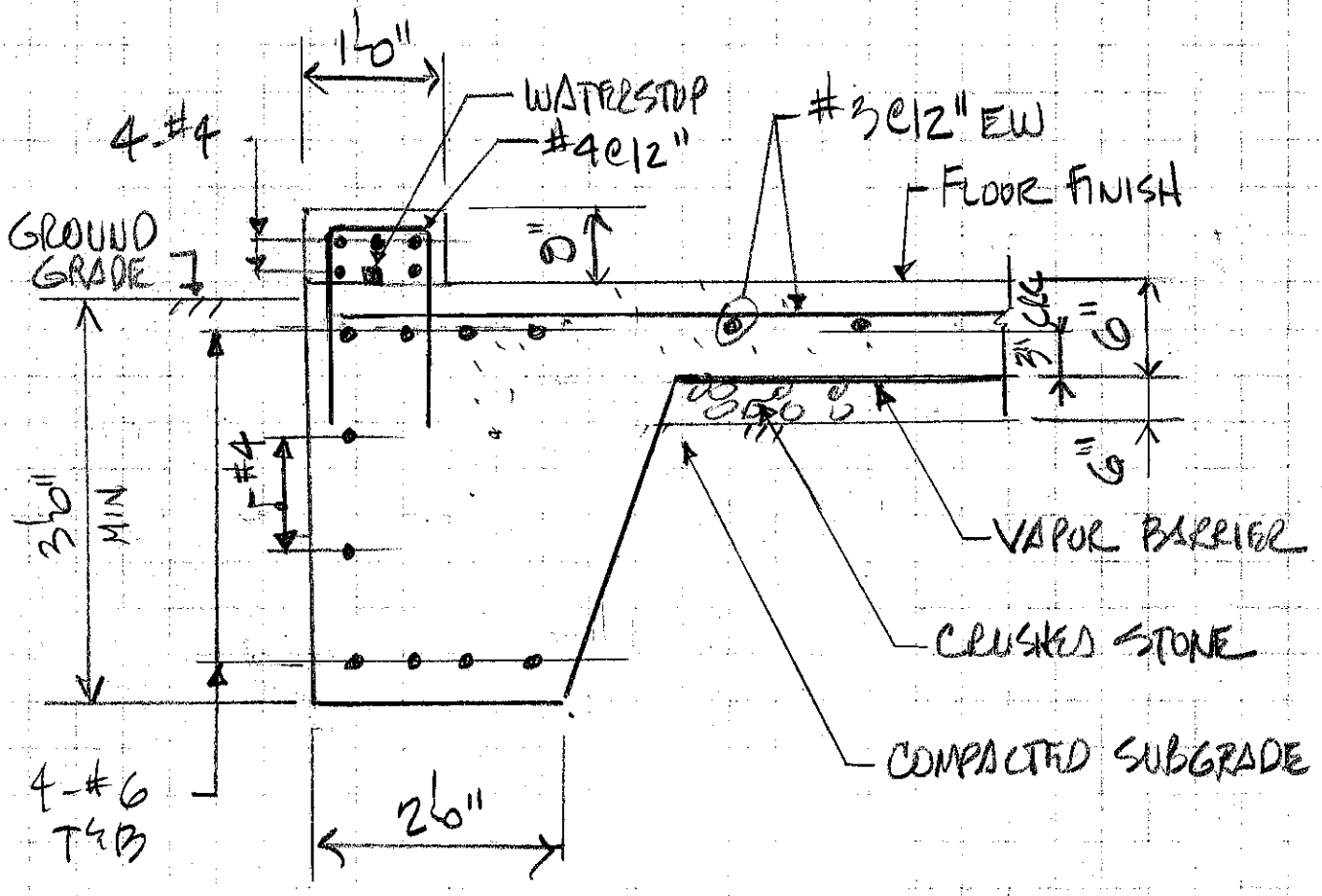


TYPICAL WAREHOUSE FND
NTS

SUBJECT ELCON SHEET# OF
BY [illegible] DATE 5/24/2016
PROJECT#

# PERIMETER / SECURITY WALL

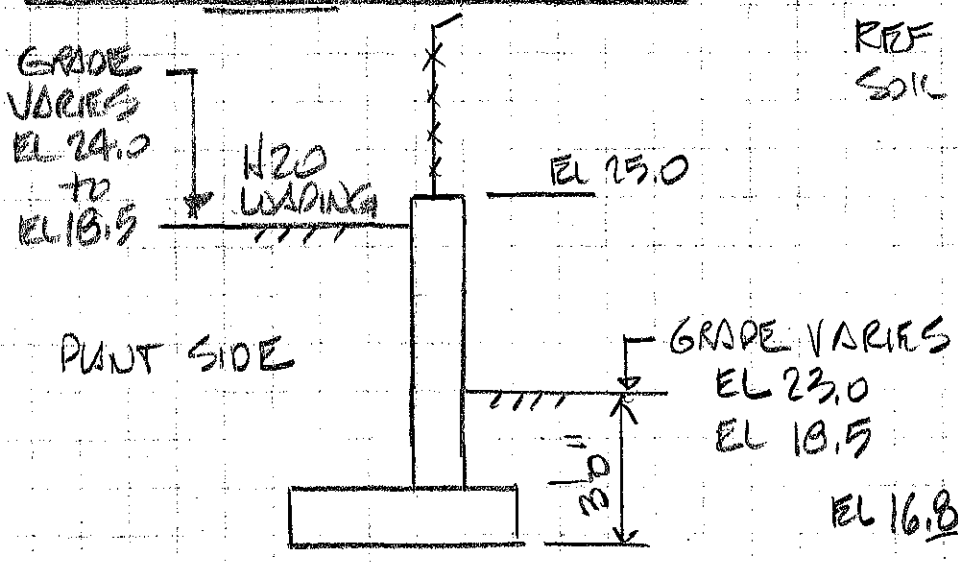


TYPICAL CROSS SECTION

REF GEOTECH REPORT FOR SOIL PROPERTIES:

$\gamma = 125$ pcf

$K_a = 0.31$ $K_p = 3.25$

$\mu = 0.35$ @ BASE

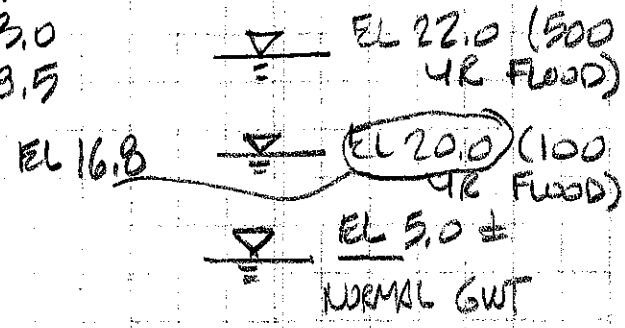


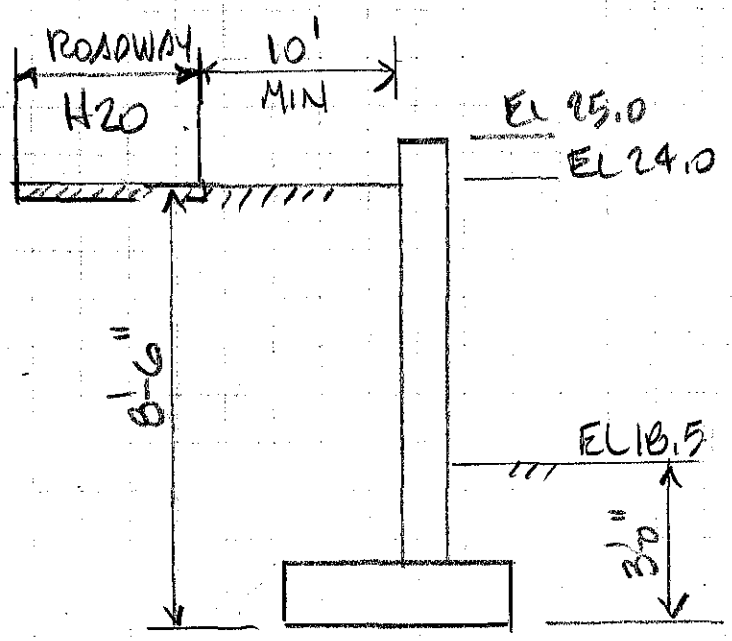


## DESIGN CONDITIONS

LC1: D+L (SURCHARGE), NORMAL GWT

LC2: D+L (SURCHARGE), 100 YEAR FLOOD

LC3 D+L+SEISMIC, NORMAL GWT
(D+H+0.75(.7E)+0.75L)

LC4: D+L+WIND, NORMAL GWT
D+H+.75L+0.75W

WORST CASE –
SOIL & SURCHARGE LOADING
(TYPE 1 RETAINING WALL)

CONSIDER H20 AS 250psf @ SURFACE BEHIND WALL (NEGLECT ROAD OFFSET)

SUBJECT El Con SHEET# OF
BY AP Pozon DATE 5/24/2016
PROJECT#

H2O LOADING : TYPICALLY CONSIDERED AS 2 FT OF SOIL (250psf).

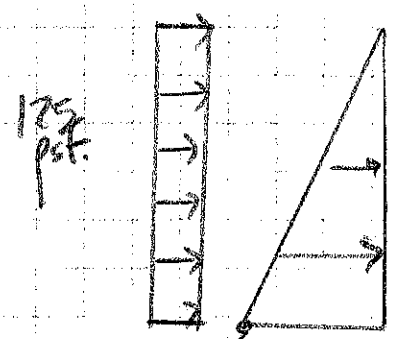


PRESCRIBED PRESSURE
0.31(125) = 38.75 USE 39 psf.

125(0.5)(.31) = 329 psf.

ANALYSIS PROGRAM USES ONE VALUE OF Ka.
MODIFY H2O LOAD IN PROGRAM TO GET SAME LOAD REQ'D BY GEOTECH (Ka = 0.5 FOR SURCHARGE)

W(.31) = 125psf ; W = 403 Say 400 psf.
400(.31) = 124 psf OK.

WALL STABILITY ANALYSIS USING CSC/TEDDS SOFTWARE. CALCS FOLLOW

## RETAINING WALL ANALYSIS LC 1

**In accordance with IBC 2009**

Tedds calculation version 2.4.06

**Retaining wall details**

| | | | |
|---|---|---|---|
| Stem type | Cantilever | | |
| Stem height | $h_{stem}$ = **8.5** ft | | |
| Stem thickness | $t_{stem}$ = **12** in | | |
| Angle to rear face of stem | $\alpha$ = **90** deg | | |
| Stem density | $\gamma_{stem}$ = **150** pcf | | |
| Toe length | $l_{toe}$ = **1** ft | | |
| Heel length | $l_{heel}$ = **3** ft | | |
| Base thickness | $t_{base}$ = **12** in | | |
| Base density | $\gamma_{base}$ = **150** pcf | | |
| Height of retained soil | $h_{ret}$ = **5.5** ft | Angle of soil surface | $\beta$ = **0** deg |
| Depth of cover | $d_{cover}$ = **2** ft | | |

**Retained soil properties**

| | | | |
|---|---|---|---|
| Soil type | Medium dense well graded sand | | |
| Moist density | $\gamma_{mr}$ = **125** pcf | | |
| Saturated density | $\gamma_{sr}$ = **145** pcf | | |
| Effective angle of internal resistance | | $\phi_r$ = **32** deg | |
| Effective wall friction angle | $\delta_r$ = **16** deg | | |

**Base soil properties**

| | | | |
|---|---|---|---|
| Soil type | Medium dense well graded sand | | |
| Moist density | $\gamma_{mb}$ = **125** pcf | | |
| Cohesion | $c_b$ = **0** psf | | |
| Effective angle of internal resistance | | $\phi_b$ = **32** deg | |
| Effective wall friction angle | $\delta_b$ = **15** deg | | |
| Effective base friction angle | $\delta_{bb}$ = **30** deg | | |
| Allowable bearing pressure | $P_{bearing}$ = **3500** psf | | |

**Loading details**

| | |
|---|---|
| Live surcharge load | $Surcharge_L$ = **400** psf |

| Tedds<br>IES Engineers<br><br>Blue Bell, PA 19422 | Project<br>Elcon Recycling | | | | Job Ref.<br>R4 | |
|---|---|---|---|---|---|---|
| | Section<br>Perimeter Wall - Max Height + surcharge, normal GWT | | | | Sheet no./rev.<br>2 | |
| | Calc. by<br>A. Popoli | Date<br>7/6/2016 | Chk'd by | Date | App'd by | Date |

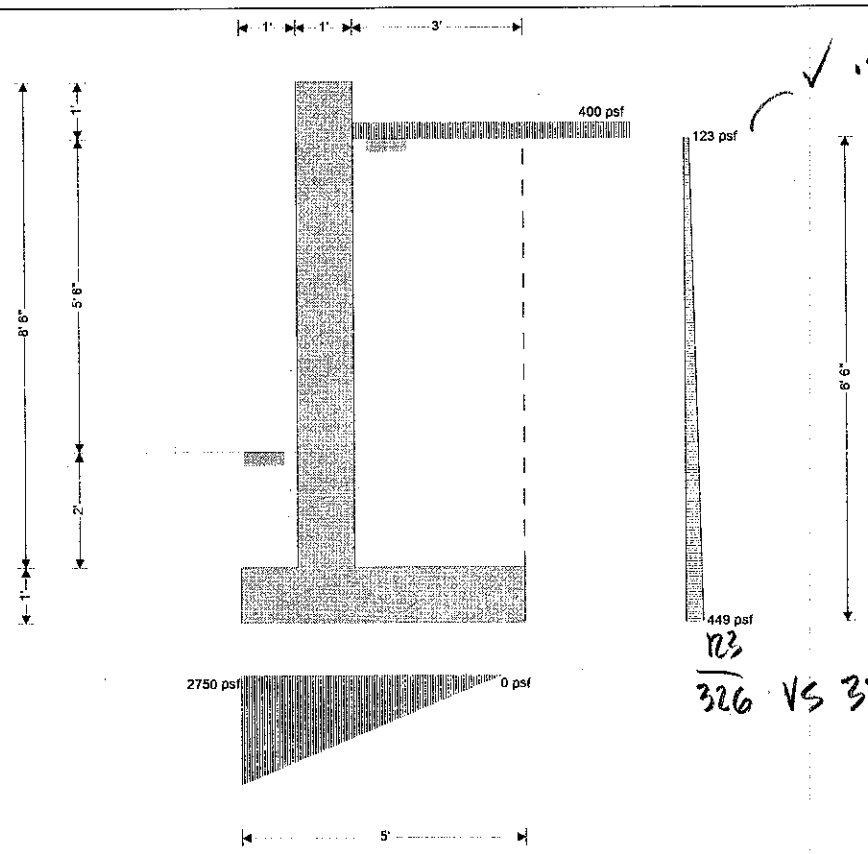


✓ .5(250) = 125

123

326 VS 329 OK ✓

**Calculate retaining wall geometry**

| | | | |
|---|---|---|---|
| Base length | $l_{base}$ = **5** ft | | |
| Moist soil height | $h_{moist}$ = **7.5** ft | | |
| Length of surcharge load | $l_{sur}$ = **3** ft | | |
| Vertical distance | $x_{sur\_v}$ = **3.5** ft | | |
| Effective height of wall | $h_{eff}$ = **8.5** ft | | |
| Horizontal distance | $x_{sur\_h}$ = **4.25** ft | | |
| Area of wall stem | $A_{stem}$ = **8.5** ft$^2$ | Vertical distance | $x_{stem}$ = **1.5** ft |
| Area of wall base | $A_{base}$ = **5** ft$^2$ | Vertical distance | $x_{base}$ = **2.5** ft |
| Area of moist soil | $A_{moist}$ = **22.5** ft$^2$ | Vertical distance | $x_{moist\_v}$ = **3.5** ft |
| | | Horizontal distance | $x_{moist\_h}$ = **2.833** ft |
| Area of base soil | $A_{pass}$ = **2** ft$^2$ | Vertical distance | $x_{pass\_v}$ = **0.5** ft |
| | | Horizontal distance | $x_{pass\_h}$ = **1** ft |
| Area of excavated base soil | $A_{exc}$ = **2** ft$^2$ | Vertical distance | $x_{exc\_v}$ = **0.5** ft |
| | | Horizontal distance | $x_{exc\_h}$ = **1** ft |

**Using Rankine theory**

Active pressure coefficient $K_A$ = **0.307** ✓ 0.31

Passive pressure coefficient $K_P$ = **3.255** ✓ 3.25

**From IBC 2009 cl.1807.2.3 Safety factor**

Load combination 1 1.0 × Dead + 1.0 × Live + 1.0 × Lateral earth

**Sliding check**

**Vertical forces on wall**

Total $F_{total\_v} = F_{stem} + F_{base} + F_{moist\_v} + F_{exc\_v} =$ **5088** plf

**Horizontal forces on wall**

Total $F_{total\_h} = F_{moist\_h} + F_{sur\_h} =$ **2432** plf

**Check stability against sliding**

Resistance to sliding $F_{rest} =$ **4768** plf Factor of safety $FoS_{sl} =$ **1.96** > 1.5

***PASS - Factor of safety against sliding is adequate***

**Overturning check**

**Vertical forces on wall**

Total $F_{total\_v} = F_{stem} + F_{base} + F_{moist\_v} + F_{exc\_v} =$ **5088** plf

**Horizontal forces on wall**

Total $F_{total\_h} = F_{moist\_h} + F_{exc\_h} + F_{sur\_h} =$ **601** plf

**Overturning moments on wall**

Total $M_{total\_OT} = M_{moist\_OT} + M_{sur\_OT} =$ **8371** lb_ft/ft

**Restoring moments on wall**

Total $M_{total\_R} = M_{stem\_R} + M_{base\_R} + M_{moist\_R} + M_{exc\_R} =$ **15587** lb_ft/ft

**Check stability against overturning**

Factor of safety $FoS_{ot} =$ **1.862** > 1.5

***PASS - Factor of safety against overturning is adequate***

**Bearing pressure check**

**Vertical forces on wall**

Total $F_{total\_v} = F_{stem} + F_{base} + F_{moist\_v} + F_{pass\_v} + F_{sur\_v} =$ **6288** plf

**Horizontal forces on wall**

Total $F_{total\_h} = \max(F_{moist\_h} + F_{pass\_h} + F_{sur\_h} - F_{total\_v} \times \tan(\delta_{bb}), 0 \text{ plf}) =$ **0** plf

**Moments on wall**

Total $M_{total} = M_{stem} + M_{base} + M_{moist} + M_{pass} + M_{sur} =$ **9585** lb_ft/ft

**Check bearing pressure**

Bearing pressure at toe $q_{toe} =$ **2750** psf Bearing pressure at heel $q_{heel} =$ **0** psf

Factor of safety $FoS_{bp} =$ **1.273**

***PASS - Allowable bearing pressure exceeds maximum applied bearing pressure***

**RETAINING WALL DESIGN**

**In accordance with ACI 318-08**

Tedds calculation version 2.4.06

**Concrete details**

Compressive strength $f'_c =$ **4000** psi Concrete type Normal weight

**Reinforcement details**

Yield strength $f_y =$ **60000** psi Modulus of elasticity $E_s =$ **29000000** psi

**Cover to reinforcement**

Front face of stem $c_{sf} =$ **2** in Rear face of stem $c_{sr} =$ **3** in

Top face of base $c_{bt}$ = **2** in  Bottom face of base $c_{bb}$ = **3** in

**From IBC 2009 cl.1605.2.1 Basic load combinations**

Load combination no.1 1.4 × Dead

Load combination no.2 1.2 × Dead + 1.6 × Live + 1.6 × Lateral earth

Load combination no.3 1.2 × Dead + 1.0 × Earthquake + 1.0 × Live

Load combination no.4 0.9 × Dead + 1.0 × Earthquake + 1.6 × Lateral earth

**Check stem design at base of stem**

Depth of section h = **12** in

**Rectangular section in flexure - Chapter 10**

Factored bending moment M = **9851** lb_ft/ft

Tens.reinforcement provided No.6 bars @ 12" c/c  Tens.reinforcement provided $A_{sr.prov}$ = **0.442** in²/ft

Max.reinforcement spacing $s_{max}$ = **18** in

***PASS - Reinforcement is adequately spaced***

Nominal flexural strength $M_n$ = **18334** lb_ft/ft  Strength reduction factor $\phi_f$ = **0.9**

Design flexural strength $\phi M_n$ = **16501** lb_ft/ft  $M / \phi M_n$ = **0.597**

***PASS - Design flexural strength exceeds factored bending moment***

Reinforcement by analysis $A_{sr.des}$ = **0.26** in²/ft  Min.tension reinforcement $A_{sr.min}$ = **0.345** in²/ft

***PASS - Area of reinforcement provided is greater than minimum area of reinforcement required***

**Rectangular section in shear - Chapter 11**

Factored shear force V = **3203** lb/ft

Nominal conc.shear strength $V_c$ = **13092** lb/ft  Strength reduction factor $\phi_s$ = **0.75**

Design conc.shear strength $\phi V_c$ = **9819** lb/ft  $V / \phi V_c$ = **0.326**

***PASS - No shear reinforcement is required***

**Horizontal reinforcement parallel to face of stem**

Min.area of reinforcement $A_{sx.req}$ = **0.288** in²/ft

Trans.reinforcement provided No.4 bars @ 8" c/c each face  Trans.reinforcement provided $A_{sx.prov}$ = **0.589** in²/ft

***PASS - Area of reinforcement provided is greater than area of reinforcement required***

**Check base design at toe**

Depth of section h = **12** in

**Rectangular section in flexure - Chapter 10**

Factored bending moment M = **1745** lb_ft/ft

Tens.reinforcement provided No.5 bars @ 12" c/c  Tens.reinforcement provided $A_{bb.prov}$ = **0.307** in²/ft

Max.reinforcement spacing $s_{max}$ = **18** in

***PASS - Reinforcement is adequately spaced***

Nominal flexural strength $M_n$ = **12980** lb_ft/ft  Strength reduction factor $\phi_f$ = **0.9**

Design flexural strength $\phi M_n$ = **11682** lb_ft/ft  $M / \phi M_n$ = **0.149**

***PASS - Design flexural strength exceeds factored bending moment***

Reinforcement by analysis $A_{bb.des}$ = **0.045** in²/ft  Min.tension reinforcement $A_{bb.min}$ = **0.259** in²/ft

***PASS - Area of reinforcement provided is greater than minimum area of reinforcement required***

**Rectangular section in shear - Chapter 11**

Factored shear force V = **3292** lb/ft

Nominal conc.shear strength $V_c$ = **13187** lb/ft  Strength reduction factor $\phi_s$ = **0.75**

Design conc.shear strength $\phi V_c$ = **9890** lb/ft  $V / \phi V_c$ = **0.333**

| Tedds<br>IES Engineers<br><br>Blue Bell, PA 19422 | Project<br>Elcon Recycling | | | | Job Ref.<br>R7 | |
|---|---|---|---|---|---|---|
| | Section<br>Perimeter Wall - Max Height + surcharge, normal GWT | | | | Sheet no./rev.<br>5 | |
| | Calc. by<br>A. Popoli | Date<br>7/6/2016 | Chk'd by | Date | App'd by | Date |

***PASS - No shear reinforcement is required***

**Rectangular section in flexure - Chapter 10**

Factored bending moment $M$ = **7820** lb_ft/ft

Tens.reinforcement provided No.5 bars @ 12" c/c  Tens.reinforcement provided $A_{bt.prov}$ = **0.307** in$^2$/ft

Max.reinforcement spacing $s_{max}$ = **18** in

***PASS - Reinforcement is adequately spaced***

Nominal flexural strength $M_n$ = **14514** lb_ft/ft  Strength reduction factor $\phi_f$ = **0.9**

Design flexural strength $\phi M_n$ = **13063** lb_ft/ft  $M / \phi M_n$ = **0.599**

***PASS - Design flexural strength exceeds factored bending moment***

Reinforcement by analysis $A_{bt.des}$ = **0.182** in$^2$/ft  Min.tension reinforcement $A_{bt.min}$ = **0.259** in$^2$/ft

***PASS - Area of reinforcement provided is greater than minimum area of reinforcement required***

**Rectangular section in shear - Chapter 11**

Factored shear force $V$ = **4167** lb/ft

Nominal conc.shear strength $V_c$ = **14705** lb/ft  Strength reduction factor $\phi_s$ = **0.75**

Design conc.shear strength $\phi V_c$ = **11028** lb/ft  $V / \phi V_c$ = **0.378**

***PASS - No shear reinforcement is required***

**Transverse reinforcement parallel to base**

Min.area of reinforcement $A_{bx.req}$ = **0.259** in$^2$/ft

Trans.reinforcement provided No.4 bars @ 8" c/c each face  Trans.reinforcement provided $A_{bx.prov}$ = **0.589** in$^2$/ft

***PASS - Area of reinforcement provided is greater than area of reinforcement required***

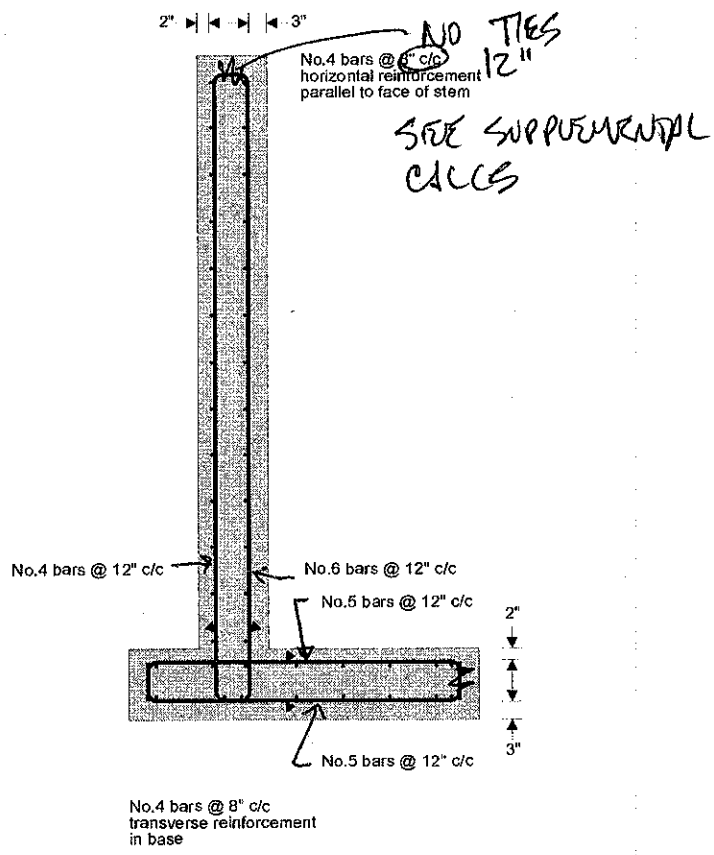

| Tedds<br>IES Engineers<br><br>Blue Bell, PA 19422 | Project<br>Elcon Recycling | | | | Job Ref.<br>KB | |
|---|---|---|---|---|---|---|
| | Section<br>Perimeter Wall - Max Height + surcharge, 100 year flood | | | | Sheet no./rev.<br>1 | |
| | Calc. by<br>A. Popoli | Date<br>7/6/2016 | Chk'd by | Date | App'd by | Date |

**RETAINING WALL ANALYSIS** LC2

**In accordance with IBC 2009**

Tedds calculation version 2.4.06

**Retaining wall details**

| | | | |
|---|---|---|---|
| Stem type | Cantilever | | |
| Stem height | $h_{stem}$ = **8.5** ft | | |
| Stem thickness | $t_{stem}$ = **12** in | | |
| Angle to rear face of stem | $\alpha$ = **90** deg | | |
| Stem density | $\gamma_{stem}$ = **150** pcf | | |
| Toe length | $l_{toe}$ = **1** ft | | |
| Heel length | $l_{heel}$ = **3** ft | | |
| Base thickness | $t_{base}$ = **12** in | | |
| Base density | $\gamma_{base}$ = **150** pcf | | |
| Height of retained soil | $h_{ret}$ = **5.5** ft | Angle of soil surface | $\beta$ = **0** deg |
| Depth of cover | $d_{cover}$ = **2** ft | | |
| Height of water | $h_{water}$ = **1.5** ft | | |
| Water density | $\gamma_w$ = **62** pcf | | |

**Retained soil properties**

| | | | |
|---|---|---|---|
| Soil type | Medium dense well graded sand | | |
| Moist density | $\gamma_{mr}$ = **125** pcf | | |
| Saturated density | $\gamma_{sr}$ = **145** pcf | | |
| Effective angle of internal resistance | | $\phi_r$ = **32** deg | |
| Effective wall friction angle | $\delta_r$ = **16** deg | | |

**Base soil properties**

| | | | |
|---|---|---|---|
| Soil type | Medium dense well graded sand | | |
| Moist density | $\gamma_{mb}$ = **125** pcf | | |
| Cohesion | $c_b$ = **0** psf | | |
| Effective angle of internal resistance | | $\phi_b$ = **32** deg | |
| Effective wall friction angle | $\delta_b$ = **15** deg | | |
| Effective base friction angle | $\delta_{bb}$ = **30** deg | | |
| Allowable bearing pressure | $P_{bearing}$ = **3500** psf | | |

**Loading details**

| | |
|---|---|
| Live surcharge load | $Surcharge_L$ = **400** psf |

| Tedds<br>IES Engineers<br><br>Blue Bell, PA 19422 | Project<br>Elcon Recycling | | | | Job Ref.<br>R9 | |
|---|---|---|---|---|---|---|
| | Section<br>Perimeter Wall - Max Height + surcharge, 100 year flood | | | | Sheet no./rev.<br>2 | |
| | Calc. by<br>A. Popoli | Date<br>7/6/2016 | Chk'd by | Date | App'd by | Date |

7/29/16: ANALYSIS USED 100 YEAR FLOOD 3.2 FT. HIGHER THAN REQ'D - CONSERVATIVE

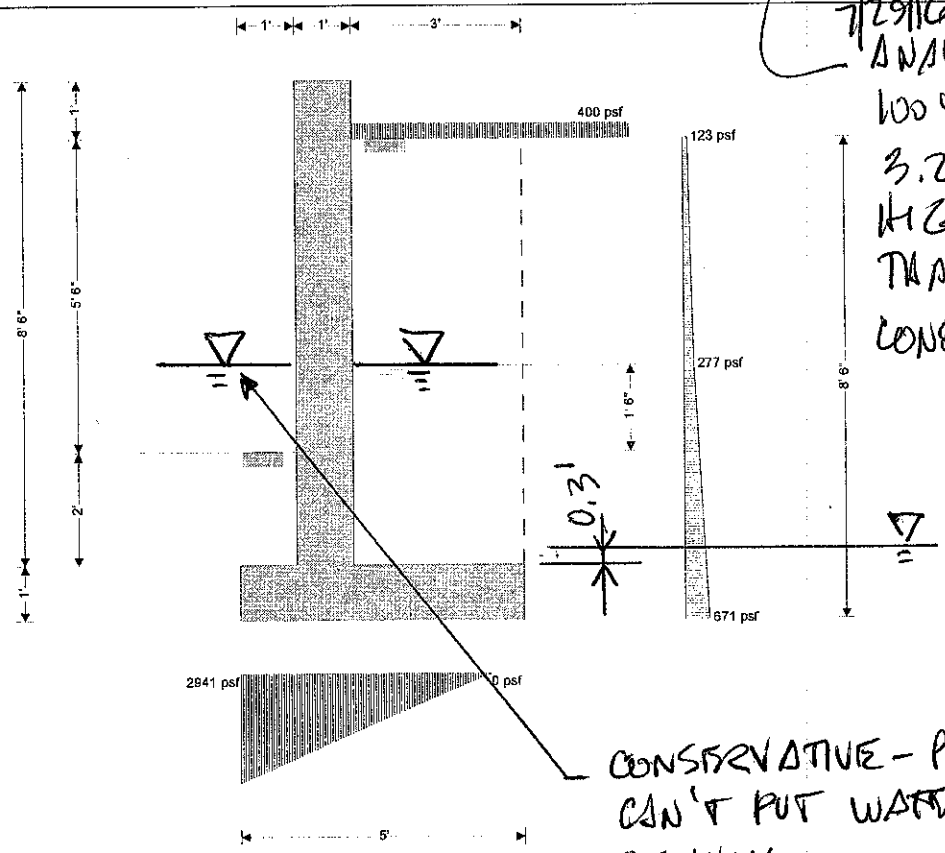


ACTUAL 100 YR FLOOD

CONSERVATIVE - PROGRAM CAN'T PUT WATER @ FRONT OF WALL.
ANALYSIS REPRESENTS POST-FLOOD CONDITION W/ WATER TRAPPED BEHIND WALL.
(SIMILAR FOR 500 YR FLOOD)

**Calculate retaining wall geometry**

| | | | |
|---|---|---|---|
| Base length | $l_{base}$ = **5** ft | | |
| Saturated soil height | $h_{sat}$ = **3.5** ft | | |
| Moist soil height | $h_{moist}$ = **4** ft | | |
| Length of surcharge load | $l_{sur}$ = **3** ft | | |
| Vertical distance | $x_{sur\_v}$ = **3.5** ft | | |
| Effective height of wall | $h_{eff}$ = **8.5** ft | | |
| Horizontal distance | $x_{sur\_h}$ = **4.25** ft | | |
| Area of wall stem | $A_{stem}$ = **8.5** ft$^2$ | Vertical distance | $x_{stem}$ = **1.5** ft |
| Area of wall base | $A_{base}$ = **5** ft$^2$ | Vertical distance | $x_{base}$ = **2.5** ft |
| Area of saturated soil | $A_{sat}$ = **10.5** ft$^2$ | Vertical distance | $x_{sat\_v}$ = **3.5** ft |
| | | Horizontal distance | $x_{sat\_h}$ = **1.5** ft |
| Area of water | $A_{water}$ = **10.5** ft$^2$ | Vertical distance | $x_{water\_v}$ = **3.5** ft |
| | | Horizontal distance | $x_{water\_h}$ = **1.5** ft |
| Area of moist soil | $A_{moist}$ = **12** ft$^2$ | Vertical distance | $x_{moist\_v}$ = **3.5** ft |
| | | Horizontal distance | $x_{moist\_h}$ = **3.353** ft |
| Area of base soil | $A_{pass}$ = **2** ft$^2$ | Vertical distance | $x_{pass\_v}$ = **0.5** ft |
| | | Horizontal distance | $x_{pass\_h}$ = **1** ft |
| Area of excavated base soil | $A_{exc}$ = **2** ft$^2$ | Vertical distance | $x_{exc\_v}$ = **0.5** ft |
| | | Horizontal distance | $x_{exc\_h}$ = **1** ft |

**Using Rankine theory**

| | | | |
|---|---|---|---|
| Active pressure coefficient | $K_A$ = **0.307** | Passive pressure coefficient | $K_P$ = **3.255** |

**From IBC 2009 cl.1807.2.3 Safety factor**

Load combination 1 — 1.0 × Dead + 1.0 × Live + 1.0 × Lateral earth

**Sliding check**

**Vertical forces on wall**

Total — $F_{total\_v} = F_{stem} + F_{base} + F_{sat\_v} + F_{moist\_v} + F_{exc\_v} + F_{water\_v} =$ **5298** plf

**Horizontal forces on wall**

Total — $F_{total\_h} = F_{sat\_h} + F_{moist\_h} + F_{water\_h} + F_{sur\_h} =$ **2931** plf

**Check stability against sliding**

Resistance to sliding — $F_{rest} =$ **3959** plf — Factor of safety — $FoS_{sl} =$ **1.35** < 1.5

***FAIL - Factor of safety against sliding is inadequate***

OK - CAN USE 1.3 FOR THIS CONDITION

ALSO - FLOOD LEVEL HIGHER THAN REQ'D

**Overturning check**

**Vertical forces on wall**

Total — $F_{total\_v} = F_{stem} + F_{base} + F_{sat\_v} + F_{moist\_v} + F_{exc\_v} + F_{water\_v} =$ **5298** plf

**Horizontal forces on wall**

Total — $F_{total\_h} = F_{sat\_h} + F_{moist\_h} + F_{exc\_h} + F_{water\_h} + F_{sur\_h} =$ **2031** plf

**Overturning moments on wall**

Total — $M_{total\_OT} = M_{sat\_OT} + M_{moist\_OT} + M_{water\_OT} + M_{sur\_OT} =$ **9120** lb_ft/ft

**Restoring moments on wall**

Total — $M_{total\_R} = M_{stem\_R} + M_{base\_R} + M_{sat\_R} + M_{moist\_R} + M_{exc\_R} + M_{water\_R} =$ **15391** lb_ft/ft

**Check stability against overturning**

Factor of safety — $FoS_{ot} =$ **1.688** > 1.5

***PASS - Factor of safety against overturning is adequate***

**Bearing pressure check**

**Vertical forces on wall**

Total — $F_{total\_v} = F_{stem} + F_{base} + F_{sat\_v} + F_{moist\_v} + F_{pass\_v} + F_{water\_v} + F_{sur\_v} =$ **6498** plf

**Horizontal forces on wall**

Total — $F_{total\_h} = \max(F_{sat\_h} + F_{moist\_h} + F_{pass\_h} + F_{water\_h} + F_{sur\_h} - F_{total\_v} \times \tan(\delta_{bb}), 0 \text{ plf}) =$ **0** plf

**Moments on wall**

Total — $M_{total} = M_{stem} + M_{base} + M_{sat} + M_{moist} + M_{pass} + M_{water} + M_{sur} =$ **9571** lb_ft/ft

**Check bearing pressure**

Bearing pressure at toe — $q_{toe} =$ **2941** psf — Bearing pressure at heel — $q_{heel} =$ **0** psf

Factor of safety — $FoS_{bp} =$ **1.19**

***PASS - Allowable bearing pressure exceeds maximum applied bearing pressure***

**RETAINING WALL DESIGN**

**In accordance with ACI 318-08**

Tedds calculation version 2.4.06

**Concrete details**

Compressive strength — $f'_c =$ **4000** psi — Concrete type — Normal weight

**Reinforcement details**

Yield strength — $f_y =$ **60000** psi — Modulus of elasticity — $E_s =$ **29000000** psi

**Cover to reinforcement**

Front face of stem $c_{sf}$ = **2** in — Rear face of stem $c_{sr}$ = **3** in

Top face of base $c_{bt}$ = **2** in — Bottom face of base $c_{bb}$ = **3** in

**From IBC 2009 cl.1605.2.1 Basic load combinations**

Load combination no.1 1.4 × Dead

Load combination no.2 1.2 × Dead + 1.6 × Live + 1.6 × Lateral earth

Load combination no.3 1.2 × Dead + 1.0 × Earthquake + 1.0 × Live

Load combination no.4 0.9 × Dead + 1.0 × Earthquake + 1.6 × Lateral earth

**Check stem design at base of stem**

Depth of section h = **12** in

**Rectangular section in flexure - Chapter 10**

Factored bending moment M = **10415** lb_ft/ft

Tens.reinforcement provided No.6 bars @ 12" c/c — Tens.reinforcement provided $A_{sr.prov}$ = **0.442** in²/ft

Max.reinforcement spacing $s_{max}$ = **18** in

***PASS - Reinforcement is adequately spaced***

Nominal flexural strength $M_n$ = **18334** lb_ft/ft — Strength reduction factor $\phi_f$ = **0.9**

Design flexural strength $\phi M_n$ = **16501** lb_ft/ft — $M / \phi M_n$ = **0.631**

***PASS - Design flexural strength exceeds factored bending moment***

Reinforcement by analysis $A_{sr.des}$ = **0.275** in²/ft — Min.tension reinforcement $A_{sr.min}$ = **0.345** in²/ft

***PASS - Area of reinforcement provided is greater than minimum area of reinforcement required***

**Rectangular section in shear - Chapter 11**

Factored shear force V = **3686** lb/ft

Nominal conc.shear strength $V_c$ = **13092** lb/ft — Strength reduction factor $\phi_s$ = **0.75**

Design conc.shear strength $\phi V_c$ = **9819** lb/ft — $V / \phi V_c$ = **0.375**

***PASS - No shear reinforcement is required***

**Horizontal reinforcement parallel to face of stem**

Min.area of reinforcement $A_{sx.req}$ = **0.288** in²/ft

Trans.reinforcement provided No.4 bars @ 8" c/c each face — Trans.reinforcement provided $A_{sx.prov}$ = **0.589** in²/ft

***PASS - Area of reinforcement provided is greater than area of reinforcement required***

**Check base design at toe**

Depth of section h = **12** in

**Rectangular section in flexure - Chapter 10**

Factored bending moment M = **1927** lb_ft/ft

Tens.reinforcement provided No.4 bars @ 8" c/c — Tens.reinforcement provided $A_{bb.prov}$ = **0.295** in²/ft

Max.reinforcement spacing $s_{max}$ = **18** in 5@12"

***PASS - Reinforcement is adequately spaced***

Nominal flexural strength $M_n$ = **12567** lb_ft/ft — Strength reduction factor $\phi_f$ = **0.9**

Design flexural strength $\phi M_n$ = **11310** lb_ft/ft — $M / \phi M_n$ = **0.170**

***PASS - Design flexural strength exceeds factored bending moment***

Reinforcement by analysis $A_{bb.des}$ = **0.049** in²/ft — Min.tension reinforcement $A_{bb.min}$ = **0.259** in²/ft

***PASS - Area of reinforcement provided is greater than minimum area of reinforcement required***

**Rectangular section in shear - Chapter 11**

Factored shear force $V$ = **3623** lb/ft

Nominal conc.shear strength $V_c$ = **13282** lb/ft  Strength reduction factor $\phi_s$ = **0.75**

Design conc.shear strength $\phi V_c$ = **9961** lb/ft  $V / \phi V_c$ = **0.364**

***PASS - No shear reinforcement is required***

**Rectangular section in flexure - Chapter 10**

Factored bending moment $M$ = **8424** lb_ft/ft

Tens.reinforcement provided No.4 bars @ 8" c/c  Tens.reinforcement provided $A_{bt.prov}$ = **0.295** in$^2$/ft

Max.reinforcement spacing $s_{max}$ = **18** in

***PASS - Reinforcement is adequately spaced***

Nominal flexural strength $M_n$ = **14039** lb_ft/ft  Strength reduction factor $\phi_f$ = **0.9**

Design flexural strength $\phi M_n$ = **12635** lb_ft/ft  $M / \phi M_n$ = **0.667**

***PASS - Design flexural strength exceeds factored bending moment***

Reinforcement by analysis $A_{bt.des}$ = **0.195** in$^2$/ft  Min.tension reinforcement $A_{bt.min}$ = **0.259** in$^2$/ft

***PASS - Area of reinforcement provided is greater than minimum area of reinforcement required***

**Rectangular section in shear - Chapter 11**

Factored shear force $V$ = **4625** lb/ft

Nominal conc.shear strength $V_c$ = **14799** lb/ft  Strength reduction factor $\phi_s$ = **0.75**

Design conc.shear strength $\phi V_c$ = **11100** lb/ft  $V / \phi V_c$ = **0.417**

***PASS - No shear reinforcement is required***

**Transverse reinforcement parallel to base**

Min.area of reinforcement $A_{bx.req}$ = **0.259** in$^2$/ft

Trans.reinforcement provided No.4 bars @ 8" c/c each face  Trans.reinforcement provided $A_{bx.prov}$ = **0.589** in$^2$/ft

***PASS - Area of reinforcement provided is greater than area of reinforcement required***

SUBJECT ELCON SHEET# OF
BY [illegible] DATE 6/29/2016
PROJECT#

SEISMIC (LC3)

REF IBC 2009 SECT 1807.2.3

USE 0.7 X NOMINAL EARTHQUAKE FORCE, FOS = 1.1

$S_{DS}$ FOR SITE IS 0.30g

SEISMIC LOAD IS INVERTED TRIANGLE:

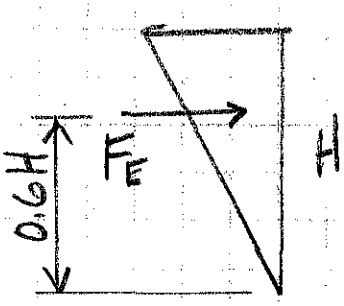


$$F_E = \frac{3}{8} K_{hE} \gamma H^2$$

$$\gamma = 125 \text{ pcf}$$

$$K_{hE} = \frac{S_{DS}}{2.5} = 0.12 \quad \text{(IBC 1803.5.12)}$$

$$F_E = \frac{3}{8}(.12)(125)(8.5)^2 = 406 \text{ \#/ft}$$

SEISMIC OTM = 406 (.6)(8.5) = 2071 ft-#/ft.

REF LC1 DESIGN: OTM = 8446 ft-#
STABILITY M = 14533 ft-#

ADD SEISMIC TO LC1 FOR LC4:

$$\text{OTM FOS} = \frac{14553}{8446 + 0.7(2071)} = 1.47 > 1.1 \text{ OK}$$

$$\text{SLIDING FOS} = \frac{4621}{2454 + 0.7(406)} = 1.69 > 1.1 \text{ OK}$$

(CONSERVATIVE - USES 1.0L INSTEAD OF 0.75L)

SUBJECT EL CON SHEET# OF
BY AP Pogoda DATE 6/20/2016
PROJECT#

BEARING PRESSURE

FROM LC1 ANALYSIS: M = 7887 ft-#
V = 6154 #

$CG = \frac{7887}{6154} = 1.28^{ft}$ ∴ $e = \frac{4.66}{2} - 1.28 = 1.05'$
> b/6

REF TENG, "FOUNDATION DESIGN" PRENTICE-HALL 1962
FIG 6-14

$$q_{max} = \frac{Q}{A}\left[\frac{4B}{3B-6e}\right]$$

$$= \frac{6154}{4.67}\left[\frac{4(4.67)}{3(4.67)-6(1.05)}\right]$$

$$= 1318\,[2.42] = 3193 \approx 3201 \text{ psf}$$

IN PROGRAM ✓

ADD SEISMIC MOMENT, RECALCULATE

ADJUST OTM FOR 0.75E

SURCHARGE OTM $= \frac{125(8.5)^2}{2} = 4516^{ft\text{-}\#}$

0.25 $M_u$ = $1129^{ft\text{-}\#}$

SEISMIC OTM = 0.75(.7)2071 = $1087^{ft\text{-}\#}$

NET INCREASE $42^{ft\text{-}\#}$

NEGLIGIBLE - BEARING PRESSURE OK

SUBJECT ELCON SHEET# OF
BY AP Pogoda DATE 6/30/2016
PROJECT#

## WIND (LC4)

V = 95 MPH, EXP C

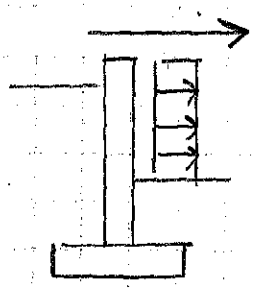

WIND OVER TOP OF WALL CREATES A SUCTION FORCE THAT CONTRIBUTES TO OVERTURNING.

FROM ASCE 7-05, SECTION 6.5.15

$F = q_z G C_f A_f \qquad G = 0.85,\ C_f = 1.4$

$q_z = 0.00256 K_z K_{zT} K_D V^2 I$

$K_z = 0.57,\ K_{zT} = 1.0,\ K_D = 0.85,\ I = 1.0$

$q_z = 0.00256(.57)(1)(.85)(95)^2(1.0)$

$= 11.2$ say 12 psf.

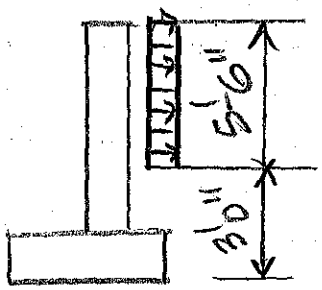


$F = 12(.85)(1.4)1 = 14.3$ say 15 psf.

$V_{WIND} = 15(5.5) = 83$ plf

$OTM_{WIND} = 83(3 + 5.5/2)$

$= 480$ ft-k/ft.

LOAD COMBIN $D + L + 0.75L + 0.75W$

$0.25L = 1129$ lb# (FROM LC5 ANALYSIS)

$> 0.75W$

REDUCTION IN LL OFFSETS WIND OTM. WALL OK

ICS ENGINEERS

SUBJECT ELCON SHEET# OF

BY AP Pogue DATE 6/30/2016

PROJECT#

## REINFORCING

MODIFY REINF AS DESIGNED BY PROGRAM / RECHECK ACI CODE.

WALL

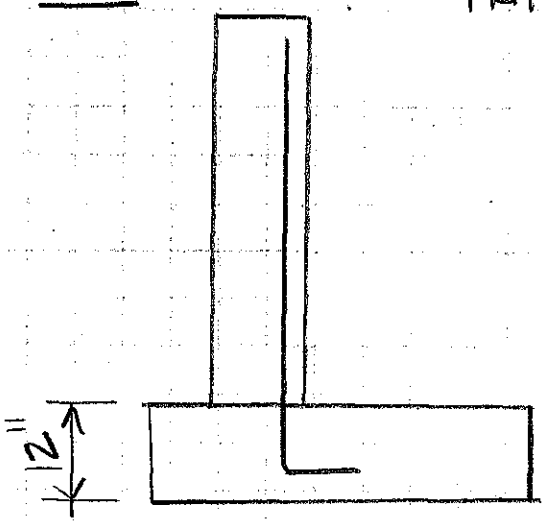


PRIMARY REINF #6 @12" - OK

$\phi M_N = 16501$ ft-#/ft.

CHECK BASE DEVELOPMENT

$l_{dh} = 19 d_b \times 0.7 = 10''$

AVAILABLE EMBED

$= 12 - 3'' - 2(1/2) = 8''$

PER ACI 318-08 12.5.3(d)

PRORATE DEVELOPMENT

$\therefore \phi M_N = \frac{8}{10}(16501)$

$= 13{,}200$ ft-#/ft.

> MAX LOADING

$M = 10712$ ft-#/ft (LC2) OK.

MIN WALL REINF

FLEXURAL SIDE

$\rho = .0033$

$d = 12 - 2 - 3/4 - 3/8 = 8\frac{7}{8}''$

Say 9"

$A_{s\,MIN} = .0033(9)(12)$

$= 0.36$ in²/ft. OK.

EXPOSED FACE: $A_{s\,MIN} = .0015(12)(12) = 0.22$ in² TOTAL

#4 @12" FRONT FACE ADDS 0.20 TO 0.44 OK

HORIZ: $A_{s\,MIN} = .0020(12)(12) = 0.29$ in²/ft.

#4 @12" HORIZ EF 0.40 in²/ft OK

SUBJECT ELCON SHEET# OF

BY [illegible] DATE 6/30/2016

PROJECT#

CONSIDER SPLICING #6 MAIN BAR

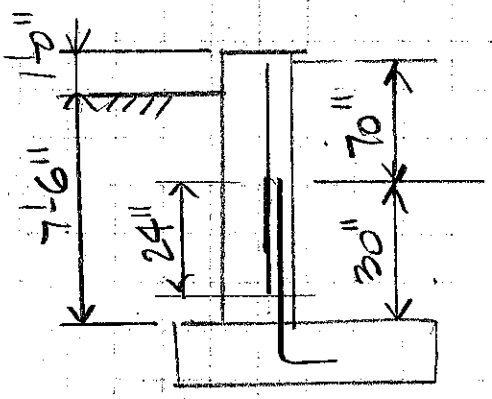


#6 ld = 38 $d_b$ = 28.5 IN.

#4 ld = 38(.5) = 19 IN × 1.3 (SPLICE

= 24.7 say 24"

SAVE $\frac{70}{12}(1.502) = 8.76$ #/FT.

ADD $\frac{(70+24)}{12}(.67) = 5.25$

3.5 #/FT. SAVINGS

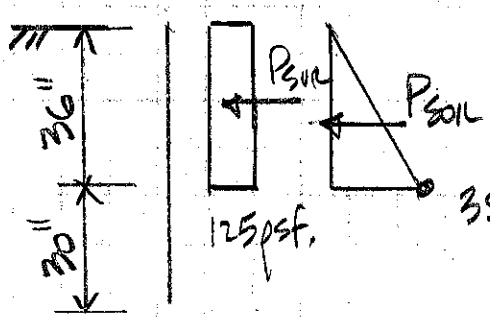


$$M_u @ 30'' = 1.6\frac{(125)}{2}(3)^2 + 1.6(117)\frac{3}{2}\left(\frac{3}{3}\right) = 1180 \text{ ft-\#/ft.}$$

$$F = \frac{(9)^2}{1000} = 0.081 \; ; \; K_n = \frac{M_u}{F} = 14.56 \; ; \; a_n = 4.45$$

$$A_s = \frac{M_u}{d a_n} = \frac{1.18}{9(4.45)} = 0.03 \text{ IN}^2 \quad \underline{\#4 @ 12''} \text{ OK}$$

SUBJECT ELCON SHEET# OF
BY [illegible] DATE 6/30/2016
PROJECT#

MAT.

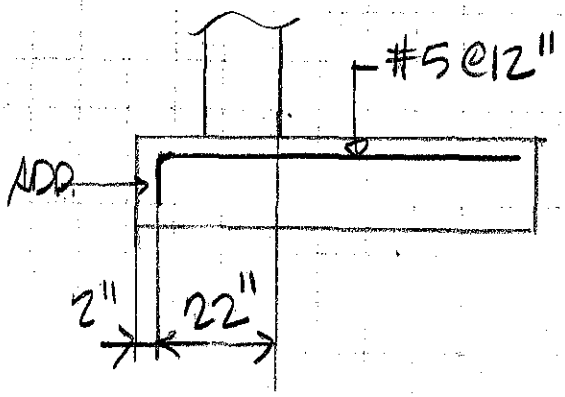


PROGRAM DEFAULT VALUE IS #4@8"

#5 ld = 38(.625) = 24" < 22" AVAILABLE

ADD STD HOOK

OTHER HOOKS SHOWN ON PROGRAM NOT REQUIRED - ld IS ADEQUATE

LC1 $M_u = 8361$ ft-#/ft.

$\phi M_N = 12635 \times \frac{8}{12} = 8423$ ft-#/ft - OK

LC2 $M_u = 8994$ ft-#/ft.

RECHECK $\phi M_N$

$d = 12 - 2 - \frac{1}{2} - \frac{1}{4} = 9\frac{1}{4}"$

$F = \frac{(9.25)^2}{1000} = 0.0855$

$K_u = \frac{M_u}{F} = \frac{8.994}{.0855} = 105$ ; $a_u = 4.42$

$A_s$ REQ'D $= \frac{8.994}{9.25(4.42)} = 0.22$ in²/ft.

USE #5@12" TOP BAR

$A_s = 0.31$ in²/ft > #4@8" (0.30 in²/ft.)

PROVIDE STD HOOK @ TOE. $l_{dh} = 19(.625)(.7)$
$= 8.3$ in < 18" AVAILABLE

IES ENGINEERS

SUBJECT ELCON SHEET# OF

BY AP Regalado DATE 6/30/2016

PROJECT#

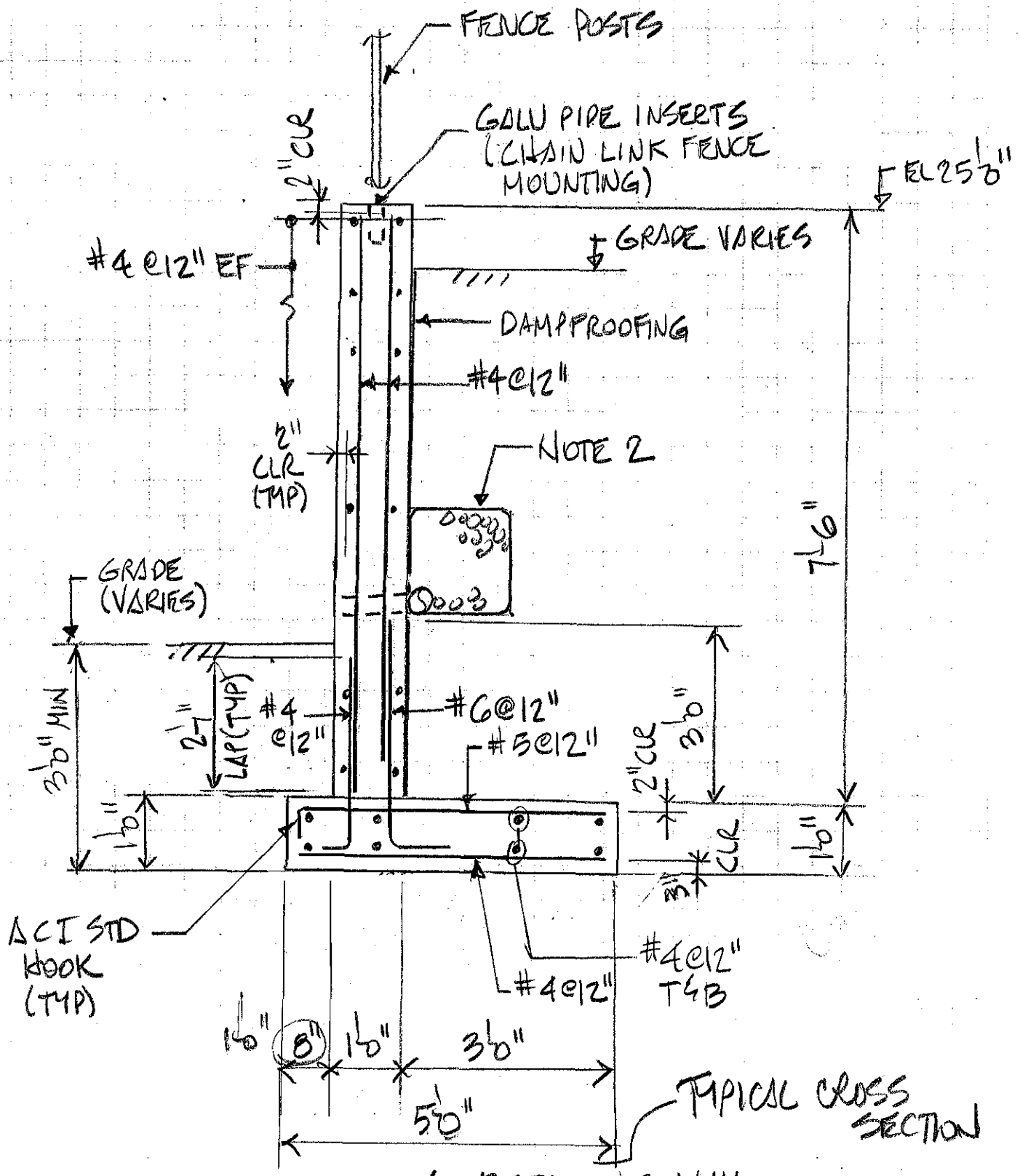


TYPE 1 RETAINING WALL

1/2" = 1'-0"

SUBJECT ELCON SHEET# OF
BY AP Pogodl DATE 6/30/2016
PROJECT#

# TYPE 2 RETAINING WALL

TOP OF WALL EL 25.0, BUT LESS BACKFILL

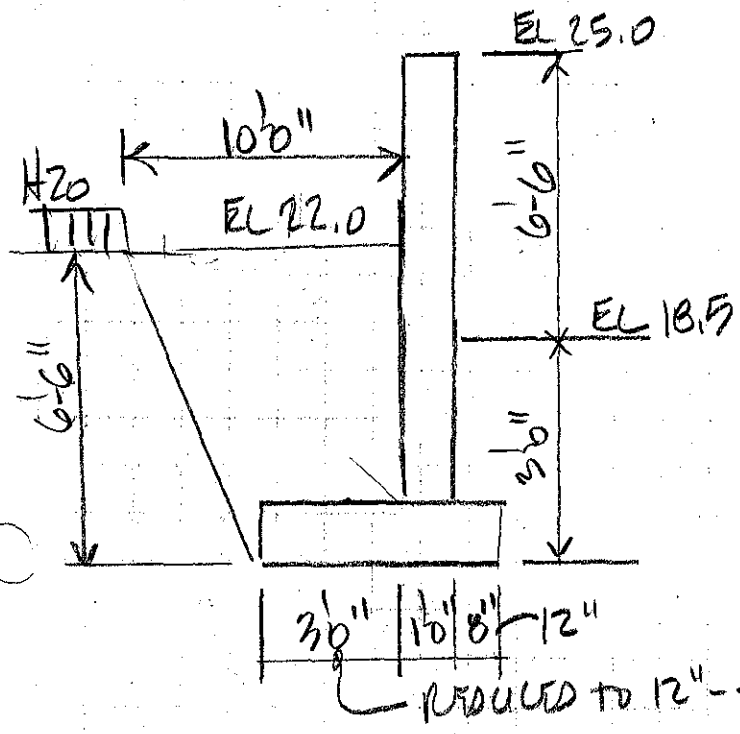


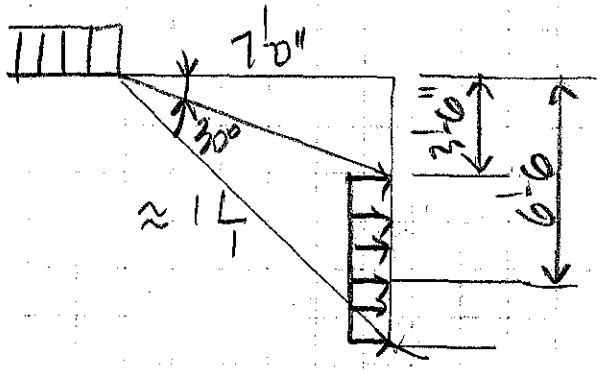


H20 LOAD IS WITHIN INFLUENCE ZONE

REDUCE SURCHARGE TO ACCOUNT FOR DISTANCE.

SURCHARGE OTM = $4(.125) \times \frac{4}{2} = 1$ K-ft/ft.

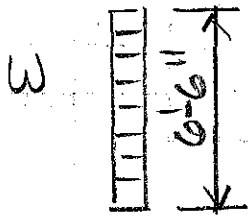


UNIF SURCH $M = \frac{W(6.5)^2}{2} = 1000$

W = 47 Say 50 psf.

REDUCE 400 psf TO $\frac{50}{125}(400) = 160$ psf TO ACCOUNT FOR DISTANCE.

CSC PROGRAM ANALYSIS FOLLOWS

## RETAINING WALL ANALYSIS

**In accordance with IBC 2009**

Tedds calculation version 2.4.06

**Retaining wall details**

| | | | |
|---|---|---|---|
| Stem type | Cantilever | | |
| Stem height | $h_{stem}$ = **8.5** ft | | |
| Stem thickness | $t_{stem}$ = **12** in | | |
| Angle to rear face of stem | $\alpha$ = **90** deg | | |
| Stem density | $\gamma_{stem}$ = **150** pcf | | |
| Toe length | $l_{toe}$ = **1** ft | | |
| Heel length | $l_{heel}$ = **1** ft | | |
| Base thickness | $t_{base}$ = **12** in | | |
| Base density | $\gamma_{base}$ = **150** pcf | | |
| Height of retained soil | $h_{ret}$ = **3.5** ft | Angle of soil surface | $\beta$ = **0** deg |
| Depth of cover | $d_{cover}$ = **2** ft | | |

**Retained soil properties**

| | | | |
|---|---|---|---|
| Soil type | Medium dense well graded sand | | |
| Moist density | $\gamma_{mr}$ = **125** pcf | | |
| Saturated density | $\gamma_{sr}$ = **145** pcf | | |
| Effective angle of internal resistance | | $\phi_r$ = **32** deg | |
| Effective wall friction angle | $\delta_r$ = **16** deg | | |

**Base soil properties**

| | | | |
|---|---|---|---|
| Soil type | Medium dense well graded sand | | |
| Moist density | $\gamma_{mb}$ = **125** pcf | | |
| Cohesion | $c_b$ = **0** psf | | |
| Effective angle of internal resistance | | $\phi_b$ = **32** deg | |
| Effective wall friction angle | $\delta_b$ = **15** deg | | |
| Effective base friction angle | $\delta_{bb}$ = **30** deg | | |
| Allowable bearing pressure | $P_{bearing}$ = **3500** psf | | |

**Loading details**

| | |
|---|---|
| Live surcharge load | $Surcharge_L$ = **160** psf |

| Tedds<br>IES Engineers<br><br>Blue Bell, PA 19422 | Project<br>Elcon Recycling | | | | Job Ref.<br>R22 | |
|---|---|---|---|---|---|---|
| | Section<br>Perimeter Wall - Type 2 + surcharge, normal GWT | | | | Sheet no./rev.<br>2 | |
| | Calc. by<br>A. Popoli | Date<br>7/6/2016 | Chk'd by | Date | App'd by | Date |

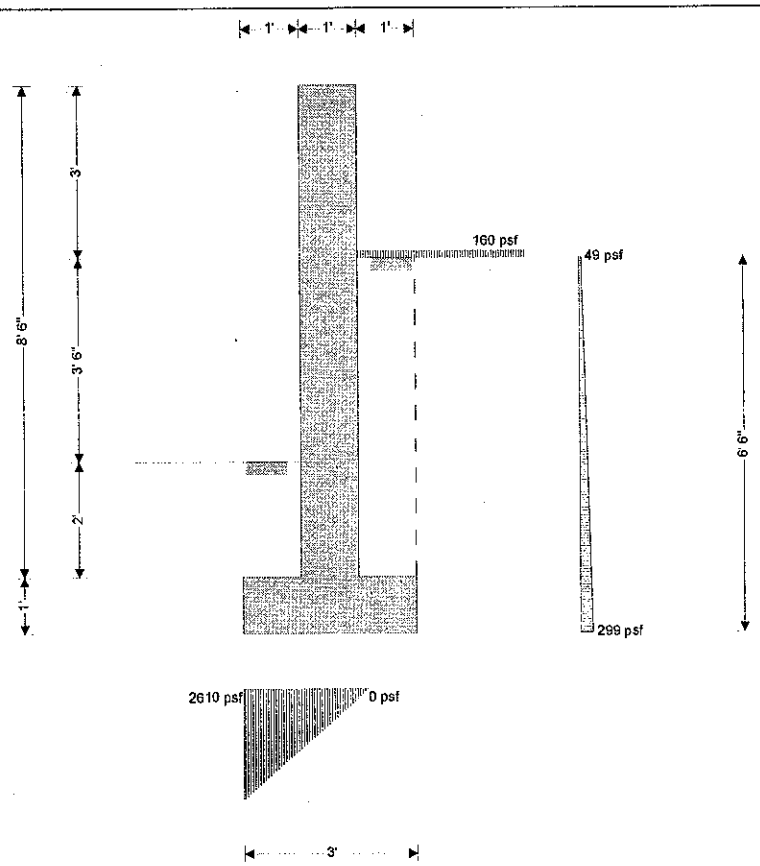


**Calculate retaining wall geometry**

| | | | |
|---|---|---|---|
| Base length | $l_{base}$ = **3** ft | | |
| Moist soil height | $h_{moist}$ = **5.5** ft | | |
| Length of surcharge load | $l_{sur}$ = **1** ft | | |
| Vertical distance | $x_{sur\_v}$ = **2.5** ft | | |
| Effective height of wall | $h_{eff}$ = **6.5** ft | | |
| Horizontal distance | $x_{sur\_h}$ = **3.25** ft | | |
| Area of wall stem | $A_{stem}$ = **8.5** ft$^2$ | Vertical distance | $x_{stem}$ = **1.5** ft |
| Area of wall base | $A_{base}$ = **3** ft$^2$ | Vertical distance | $x_{base}$ = **1.5** ft |
| Area of moist soil | $A_{moist}$ = **5.5** ft$^2$ | Vertical distance | $x_{moist\_v}$ = **2.5** ft |
| | | Horizontal distance | $x_{moist\_h}$ = **2.167** ft |
| Area of base soil | $A_{pass}$ = **2** ft$^2$ | Vertical distance | $x_{pass\_v}$ = **0.5** ft |
| | | Horizontal distance | $x_{pass\_h}$ = **1** ft |
| Area of excavated base soil | $A_{exc}$ = **2** ft$^2$ | Vertical distance | $x_{exc\_v}$ = **0.5** ft |
| | | Horizontal distance | $x_{exc\_h}$ = **1** ft |

**Using Rankine theory**

| | | | |
|---|---|---|---|
| Active pressure coefficient | $K_A$ = **0.307** | Passive pressure coefficient | $K_P$ = **3.255** |

**From IBC 2009 cl.1807.2.3 Safety factor**

Load combination 1 1.0 × Dead + 1.0 × Live + 1.0 × Lateral earth

**Sliding check**

**Vertical forces on wall**

Total $F_{total\_v} = F_{stem} + F_{base} + F_{moist\_v} + F_{exc\_v} =$ **2663** plf

**Horizontal forces on wall**

Total $F_{total\_h} = F_{moist\_h} + F_{sur\_h} =$ **1131** plf

**Check stability against sliding**

Resistance to sliding $F_{rest} =$ **3368** plf  Factor of safety $FoS_{sl} =$ **2.978** > 1.5

***PASS - Factor of safety against sliding is adequate***

**Overturning check**

**Vertical forces on wall**

Total $F_{total\_v} = F_{stem} + F_{base} + F_{moist\_v} + F_{exc\_v} =$ **2663** plf

**Horizontal forces on wall**

Total $F_{total\_h} = F_{moist\_h} + F_{exc\_h} + F_{sur\_h} =$ **0** plf

**Overturning moments on wall**

Total $M_{total\_OT} = M_{moist\_OT} + M_{sur\_OT} =$ **2796** lb_ft/ft

**Restoring moments on wall**

Total $M_{total\_R} = M_{stem\_R} + M_{base\_R} + M_{moist\_R} + M_{exc\_R} =$ **5562** lb_ft/ft

**Check stability against overturning**

Factor of safety $FoS_{ot} =$ **1.989** > 1.5

***PASS - Factor of safety against overturning is adequate***

**Bearing pressure check**

**Vertical forces on wall**

Total $F_{total\_v} = F_{stem} + F_{base} + F_{moist\_v} + F_{pass\_v} + F_{sur\_v} =$ **2823** plf

**Horizontal forces on wall**

Total $F_{total\_h} = \max(F_{moist\_h} + F_{pass\_h} + F_{sur\_h} - F_{total\_v} \times \tan(\delta_{bb}), 0\ \text{plf}) =$ **0** plf

**Moments on wall**

Total $M_{total} = M_{stem} + M_{base} + M_{moist} + M_{pass} + M_{sur} =$ **2035** lb_ft/ft

**Check bearing pressure**

Bearing pressure at toe $q_{toe} =$ **2610** psf  Bearing pressure at heel $q_{heel} =$ **0** psf

Factor of safety $FoS_{bp} =$ **1.341**

***PASS - Allowable bearing pressure exceeds maximum applied bearing pressure***

**RETAINING WALL DESIGN**

**In accordance with ACI 318-08**

Tedds calculation version 2.4.06

**Concrete details**

Compressive strength $f'_c =$ **4500** psi  Concrete type  Normal weight

**Reinforcement details**

Yield strength $f_y =$ **60000** psi  Modulus of elasticity $E_s =$ **29000000** psi

**Cover to reinforcement**

Front face of stem $c_{sf} =$ **2** in  Rear face of stem $c_{sr} =$ **2** in

Top face of base $c_{bt}$ = **2** in  Bottom face of base $c_{bb}$ = **3** in

**From IBC 2009 cl.1605.2.1 Basic load combinations**

Load combination no.1 1.4 × Dead

Load combination no.2 1.2 × Dead + 1.6 × Live + 1.6 × Lateral earth

Load combination no.3 1.2 × Dead + 1.0 × Earthquake + 1.0 × Live

Load combination no.4 0.9 × Dead + 1.0 × Earthquake + 1.6 × Lateral earth

**Check stem design at base of stem**

Depth of section h = **12** in

**Rectangular section in flexure - Chapter 10**

Factored bending moment M = **2894** lb_ft/ft

Tens.reinforcement provided No.4 bars @ 12" c/c  Tens.reinforcement provided $A_{sr.prov}$ = **0.196** in²/ft

Max.reinforcement spacing $s_{max}$ = **18** in

***PASS - Reinforcement is adequately spaced***

Nominal flexural strength $M_n$ = **9446** lb_ft/ft  Strength reduction factor $\phi_f$ = **0.9**

Design flexural strength $\phi M_n$ = **8501** lb_ft/ft  $M / \phi M_n$ = **0.340**

***PASS - Design flexural strength exceeds factored bending moment***

Reinforcement by analysis $A_{sr.des}$ = **0.066** in²/ft  Min.tension reinforcement $A_{sr.min}$ = **0.088** in²/ft

***PASS - Area of reinforcement provided is greater than minimum area of reinforcement required***

**Rectangular section in shear - Chapter 11**

Factored shear force V = **1362** lb/ft

Nominal conc.shear strength $V_c$ = **15697** lb/ft  Strength reduction factor $\phi_s$ = **0.75**

Design conc.shear strength $\phi V_c$ = **11773** lb/ft  $V / \phi V_c$ = **0.116**

***PASS - No shear reinforcement is required***

**Horizontal reinforcement parallel to face of stem**

Min.area of reinforcement $A_{sx.req}$ = **0.288** in²/ft

Trans.reinforcement provided No.4 bars @ 12" c/c each face  Trans.reinforcement provided $A_{sx.prov}$ = **0.393** in²/ft

***PASS - Area of reinforcement provided is greater than area of reinforcement required***

**Check base design at toe**

Depth of section h = **12** in

**Rectangular section in flexure - Chapter 10**

Factored bending moment M = **1745** lb_ft/ft

Tens.reinforcement provided No.4 bars @ 12" c/c  Tens.reinforcement provided $A_{bb.prov}$ = **0.196** in²/ft

Max.reinforcement spacing $s_{max}$ = **18** in

***PASS - Reinforcement is adequately spaced***

Nominal flexural strength $M_n$ = **8464** lb_ft/ft  Strength reduction factor $\phi_f$ = **0.9**

Design flexural strength $\phi M_n$ = **7618** lb_ft/ft  $M / \phi M_n$ = **0.229**

***PASS - Design flexural strength exceeds factored bending moment***

Reinforcement by analysis $A_{bb.des}$ = **0.044** in²/ft  Min.tension reinforcement $A_{bb.min}$ = **0.259** in²/ft

***FAIL - Area of reinforcement provided is less than minimum area of reinforcement required***

PASS: ACI 318 SECT 10.5 ρ = .0033 OR
SECT 10.5.3: 1.33 X .044
= 0.06 IN² VS 0.20 IN² PROVIDED
OK

**Rectangular section in shear - Chapter 11**

Factored shear force V = **2797** lb/ft

Nominal conc.shear strength $V_c$ = **14087** lb/ft  Strength reduction factor $\phi_s$ = **0.75**

Design conc.shear strength $\phi V_c$ = **10565** lb/ft  $V / \phi V_c$ = **0.265**

| Tedds<br>IES Engineers<br><br>Blue Bell, PA 19422 | Project<br>Elcon Recycling | | | | Job Ref.<br>R25 | |
|---|---|---|---|---|---|---|
| | Section<br>Perimeter Wall - Type 2 + surcharge, normal GWT | | | | Sheet no./rev.<br>5 | |
| | Calc. by<br>A. Popoli | Date<br>7/6/2016 | Chk'd by | Date | App'd by | Date |

***PASS - No shear reinforcement is required***

**Rectangular section in flexure - Chapter 10**

Factored bending moment $M$ = **630** lb_ft/ft

Tens.reinforcement provided No.4 bars @ 12" c/c  Tens.reinforcement provided $A_{bt.prov}$ = **0.196** in²/ft

Max.reinforcement spacing $s_{max}$ = **18** in

***PASS - Reinforcement is adequately spaced***

Nominal flexural strength $M_n$ = **9446** lb_ft/ft  Strength reduction factor $\phi_f$ = **0.9**

Design flexural strength $\phi M_n$ = **8501** lb_ft/ft  $M / \phi M_n$ = **0.074**

***PASS - Design flexural strength exceeds factored bending moment***

Reinforcement by analysis $A_{bt.des}$ = **0.014** in²/ft  Min.tension reinforcement $A_{bt.min}$ = **0.259** in²/ft

***FAIL - Area of reinforcement provided is less than minimum area of reinforcement required***

PASS - ACI 318 10.5.3
$A_s = 0.20 > 1.33(.014)$

**Rectangular section in shear - Chapter 11**

Factored shear force $V$ = **1261** lb/ft

Nominal conc.shear strength $V_c$ = **15697** lb/ft  Strength reduction factor $\phi_s$ = **0.75**

Design conc.shear strength $\phi V_c$ = **11773** lb/ft  $V / \phi V_c$ = **0.107**

***PASS - No shear reinforcement is required***

**Transverse reinforcement parallel to base**

Min.area of reinforcement $A_{bx.req}$ = **0.259** in²/ft

Trans.reinforcement provided No.4 bars @ 12" c/c each face  Trans.reinforcement provided $A_{bx.prov}$ = **0.393** in²/ft

***PASS - Area of reinforcement provided is greater than area of reinforcement required***

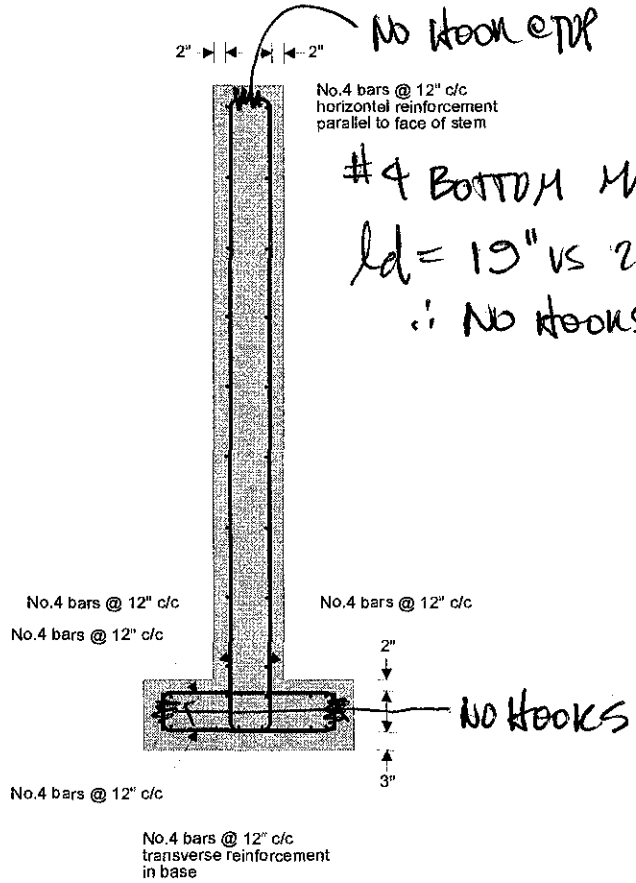


#4 BOTTOM MAT DEVELOPMENT
$l_d$ = 19" vs 24 - 2 = 22"
∴ NO HOOKS REQ'D

SUBJECT ELCON SHEET# OF
BY [illegible] DATE 6/30/2016
PROJECT#

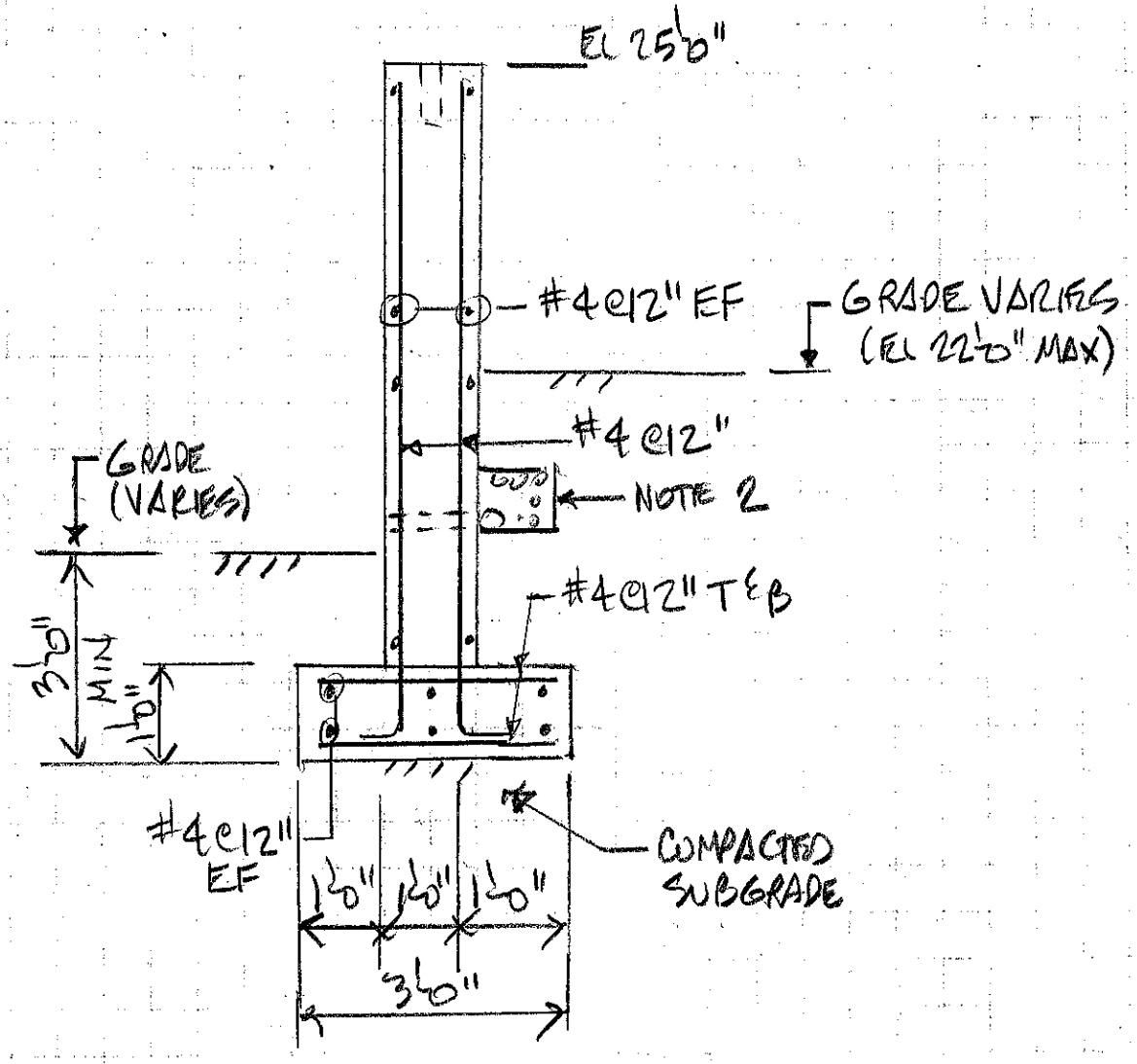


TYPICAL CROSS SECTION
TYPE 2 RETAINING WALL
NTS
(SEE TYPE 1 CROSS SECT
FOR ADDN INFORMATION)

ENGINEERS

SUBJECT ELCON SHEET# OF

BY [illegible] DATE 7/6/2016

PROJECT#

EXPANSION JOINTS | CRACK CONTROL

REVIEW LITERATURE & DEVELOP RECOMMENDED SPACING

① PCA, "BUILDING MOVEMENTS & JOINTS" EB086.01B, 1982

CHAPER 6, PG 33 CONTROL JOINTS 20-25'
10-15 FROM CORNER

CHAPTER 7 EXPANSION JOINTS
PG 40: 200' MAX
PG 41 CHART: 330' X .67 = 220'

② ACI 224.3R95 (2013) "JOINTS IN CONCRETE CONSTRUCTION"

CHAPTER 8

CONTROL JOINTS: @ WALL HEIGHT (HIGH WALLS) >12'
SHORT WALLS 3H 3(8.5) = 25'
10-15' FROM CORNER.

EXPANSION JOINTS: 200-300 FT & AT CHANGES IN DIRECTION

SUMMARY

EXPANSION JOINTS: 200' MAX & AT BUILDING OR CHANGE OF WALL SECTION.

CONTRACTION JOINTS: 20' O.C, 10' FROM CORNER

APPENDIX D-12

FINAL ACT 2 REPORT FOR U.S. STEEL

Note: Information in this appendix was provided by PADEP and is reproduced from the best available copy. Even printing some of the tables on larger paper did not improve the legibility of the information.

- Description of Current Conditions U.S. Steel Fairless Works (July 1993, Revised March 1994);
- Technical Approach to the RCRA Facility Investigation (RFI)/Corrective Measures Study (CMS)dated February 1994;
- Phase I RFI Work Plan dated November 1994 (and revised January 1995);
- Phase I Interim Report dated March 1996 (and revised June and August 1996);
- Model Verification Report dated September 1996 (and revised November 1996);
- Phase I RFI dated September 1997 (and revised April 1998);
- Request for Non-Use Aquifer Determination dated January 1999; and,
- Non-use aquifer determination issued by PADEP on April 9, 1999.

USS focused their investigation activities on Site-Wide Groundwater conditions at the site within these reports. A Site-Wide Groundwater model was used to establish a perimeter monitoring network. In 1996, in association with the Phase I RFI, the perimeter monitoring wells (30 total) were sampled for RCRA Appendix IX hazardous constituents (except PCBs and pesticides). Based on the 1996 RFI monitoring results, further investigation of Site-Wide Groundwater quality in the confined aquifer was determined to be unnecessary; and, additional Site-Wide Groundwater monitoring in the water table aquifer was recommended due to sporadic, low level, exceedances of the screening criteria. In 2000, USS collected a second round of Site-Wide Groundwater samples from the perimeter monitoring wells. The results of the sampling event confirmed the results of the 1996 Phase I RFI. A non-use aquifer determination was granted for the facility by the PADEP in 1999 based on the lack of communication between the water table aquifer and the confined groundwater unit, the fact that there was no current or future use of the water table aquifer and the demonstrated lack of impact to the Delaware River from site-wide groundwater.

## 3.0 SITE GEOLOGY AND HYDROGEOLOGY

The following sections present an overview of site geology and hydrogeology. These data were used to evaluate groundwater data and to develop the Site Conceptual Model.

### 3.1 Geology

The site-specific geology can be divided into the following units: Lower Raritan Formation (Cretaceous); Upper Raritan Formation (Cretaceous); and Man-made Fill, Alluvial deposits and Pleistocene sands and gravels. The Lower Raritan Formation is comprised of the Farrington Sand, Lower Clay, and Sayreville Sand members. The Farrington Sand, located approximately 110 to 150 feet BMSL, forms the lowermost confined aquifer and is overlain by the Lower Clay. The Lower Clay, located approximately 80 to 120 feet BMSL, is the confining unit that separates the Farrington Sand from the Sayreville Sand. The Sayreville Sand, located approximately 50 to 80 feet BMSL, is the uppermost confined aquifer and is overlain by the Middle Clay member of the Upper Raritan Formation.

The Upper Raritan Formation is comprised of the Middle Clay, Old Bridge Sand, and Upper Clay members. The Middle Clay, located approximately 30 to 60 feet BMSL, is the confining unit that separates the Sayreville Sand member of the Lower Raritan Formation from the Old Bridge Sand. The Old Bridge Sand, located approximately 20 to 40 feet BMSL, is considered part of the water table aquifer and is overlain by the Upper Clay, Magothy Formation deposits, Trenton gravel and Holocene alluvium. The water table aquifer comprises all deposits above the Middle Clay confining unit.

Based on Langan's observations from other site investigation activities, the KIPC overburden is comprised of fill material overlying fine to coarse sand/gravel, silts and clays. The fill encountered varies in thickness from a few feet to at least 15 feet below ground surface (bgs). Fill materials generally include a heterogeneous mix of fine to coarse sand and gravel (black, brown, orange brown, and yellow), silt (brown, gray, red, black, and yellow), clay (red and gray), asphalt, slag, gravels, brick, and scraps of metal and wood fragments. Native soils are indicative of the Trenton Gravel Series and generally consist of fine to coarse gravel, sand, with some silt and minor amounts of clay. Bedrock has not been encountered during any of the RI activities completed by Langan; however, the 1997 RCRA Facility Investigation Report noted that the center of the KIPC is underlain by the Wissahickon Schist which is encountered about 50 to 140 feet bgs (cross section B-B' 1997 RCRA Report).

### 3.2 Hydrogeology

Site-Wide Groundwater occurs throughout the overburden unit at depths from about 6.5 feet to 20 feet below grade. Flow direction is generally to the south southeast towards the Delaware River. Referring to Figure 4, the average Site hydraulic gradient to the southeast is 0.00056 feet per foot and to the south is 0.00035 feet per foot. According to BCM Engineers, Inc. "Phase I RCRA Facility Investigation Final Report, dated September 19, 1997," the average hydraulic conductivity is 7.2 fee per day.

During RI activities, groundwater was not found to flow into Biles Creek (North of the Site) due to it's small size, shallow depth, and movement of Site-Wide Groundwater parallel to Biles Creek. Groundwater contour maps prepared for October 2008 and June 2009 are shown on Figures 3 and 4. Since April 1999, the Site has been designated a non-use aquifer by PADEP. A copy of the documentation that supports the approved non-use aquifer designation is provided in Appendix C.

## 4.0 SUMMARY OF PREVIOUS SITE-WIDE GROUNDWATER SAMPLING

### 4.1 Site-Wide Groundwater

Three rounds of Site-Wide Groundwater monitoring were conducted at the site between 1996 and 2000 by USS. The following briefly summarizes the results of these events.

<u>December 1996 Site-Wide Groundwater Sampling Event</u>:

- A total of 30 wells were sampled;
- 25 wells were analyzed for Metals and VOCs; and
- 5 wells were analyzed for Metals, SVOCs & VOC.

Results indicated sporadic low level detections but were below their respective non-residential groundwater non use aquifer MSC's.

<u>February 1997 Site-Wide Groundwater Sampling Event</u>:

- A total of 29 wells were sampled;
- 25 wells were sampled and analyzed for SVOCs; and
- 4 wells were samples for specific VOCs including for VOCs were analyzed for

# APPENDIX C

# Non-Use Aquifer Supporting Documents and Approvals

LANGAN

Pennsylvania Department of Environmental Protection

**Lee Park, Suite 6010**
**555 North Lane**
**Conshohocken, PA 19428**
April 9, 1999

**Southeast Regional Office**

610-832-5949
Fax 610-832-6143

Mr. Dennis L. McCartney
USX Industrial Park
20 Street Road South
Morrisville, PA 19067-3614

Re: ECP – Special Projects
USX Corporation – Fairless Works
LRP No. 1-9-2-27618
Falls Township
Bucks County

Dear Mr. McCartney:

The Department of Environmental Protection (DEP), has reviewed your January 19, 1999 report titled "Request for Non-Use Aquifer Determination." Civil & Environmental Consultants, Inc. (CEC) prepared the report for USX Corporation. CEC has provided the appropriate documentation in accordance with Sections 250.303 and 250.309 of our regulations adopted pursuant to the Land Recycling and Environmental Remediation Standards Act (Act 2).

According to the January 19, 1999 report, the following requirements for a non-use aquifer determination have been met at the USX-Fairless Works property and 1,000 feet downgradient of the points of compliance. The point of compliance is the downgradient property boundary that borders the Delaware River.

1. No groundwater derived from wells or springs is used or currently planned to be used for drinking water or agricultural purposes.

2. All downgradient properties are connected to a community water system.

3. The area does not intersect a radius of ½ mile from a community water supply source or an area designated as a Zone 2 wellhead protection area.

USX REALTY DEV
APR 1 2 1999
RECEIVED

The downgradient property boundary of Fairless Works borders the Delaware River. Contaminants of concern in the water-table aquifer are assumed to flow into the river. CEC calculated the expected instream concentrations using a mass-balance equation for each contaminant of concern found in groundwater at Fairless Works. The calculated concentrations were compared to the instream criteria found in Chapter 16 of Title 25 Water Quality Toxics Management Strategy-Statement of Policy. The results of the comparison indicate that concentrations of the constituents of concern are below the instream standards.

Based upon the January 19 submission, the requirements of Sections 250.303 and 250.309 of the Act 2 regulations have been satisfied. Therefore, non-use aquifer standards may be applied to the subject site.

Be aware that a deed notice advising prospective buyers of the non-use aquifer status at this property is one of the conditions toward ultimately receiving the liability protection afforded by Chapter 5 of Act 2.

If you have any questions, please call Ms. Lauren Mapleton at 610-832-5922.

Sincerely,

Bruce D. Beitler

Bruce D. Beitler
Regional Manager
Environmental Cleanup

cc: Mr. Day-Lewis
Mr. Burke
Ms. Mapleton
Mr. Forte
Mr. Nairn
Bucks County Health Department
Falls Township
Re 30 (LK99)81-9
D. Momot /Courier
K. Maher /Courier
P. Adams / fax 419-888-5877

# REQUEST FOR NON-USE AQUIFER DETERMINATION
# USX CORPORATION FAIRLESS WORKS
# FAIRLESS HILLS, PENNSYLVANIA

## Prepared for

## US STEEL GROUP
## PITTSBURGH, PENNSYLVANIA

## CEC Project 98647.0001

## January 19, 1999

COMMONWEALTH OF PENNSYLVANIA
REGISTERED
PROFESSIONAL
KAREN E. SOUZA
GEOLOGIST
2704-G

K.E. Souza
1/19/99


Civil & Environmental Consultants, Inc.

**Pittsburgh** 333 Baldwin Road
Pittsburgh, Pennsylvania 15205-9702
Phone 412/429-2324
Fax 412/429-2114
Toll Free 800/365-2324
E-mail cecinc@cecinc.com

**Cincinnati** Phone 513/985-0226 / Toll Free 800/759-5614
**Columbus** Phone 614/540-6633 / Toll Free 888/598-6808
**Indianapolis** Phone 317/484-4280 / Toll Free 877/746-0749
**Nashville** Phone 615/371-0055 / Toll Free 800/763-2326

**Corporate Web Site** http://www.cecinc.com

# TABLE OF CONTENTS

**Page**

INTRODUCTION . . . . . 1

BACKGROUND . . . . . 1

DATA SUPPORTING A NON-USE AQUIFER DETERMINATION . . . . . 2

CONCLUSIONS . . . . . 5

REFERENCES . . . . . 8

## TABLES

Table 1 Summary of Groundwater Quality Results, Volatile Organic Compounds, USX Fairless Works

Table 2 Summary of Groundwater Quality Results, Semivolatile Organic Compounds, USX Fairless Works

Table 3 Summary of Groundwater Quality Results, Metals, USX Fairless Works

Table 4 Mixed River Transport Equation Results, Fairless Works Site

## FIGURES

Figure 1 Location of Fairless Works Site, Fairless Hills, Pennsylvania

## APPENDICES

Appendix A Wellhead Use Survey

Appendix B Falls Township Water Authority Service Distribution Map

# REQUEST FOR NON-USE AQUIFER DETERMINATION
# USX CORPORATION FAIRLESS WORKS
# FAIRLESS HILLS, PENNSYLVANIA

## INTRODUCTION

In late fall 1998, representatives of US Steel Group and Civil & Environmental Consultants, Inc. (CEC) met with Mr. Bob Day Lewis of the Pennsylvania Department of Environmental Protection (PADEP) to discuss USX Corporation's site in Fairless Hills, Pennsylvania. The discussions focused on the possibility of pursuing site remediation under PADEP's Land Recycling and Environmental Remediation Standards Act (Act 2) and the Department's opinion regarding a "non-use" aquifer status for the Fairless Works site. Based on the results of that discussion, CEC has collected information to address the requirements outlined in PA 25 Code §250.303, and has summarized these data in this document for the Department's review. The purpose of this report is to request that the PADEP designate the aquifer beneath the USX Corporation Fairless Works site as a "non-use" aquifer pursuant to Pennsylvania's Act 2 regulations.

## BACKGROUND

USX Corporation's Fairless Works facility is a 2,500+ acre property located in Falls Township, on the Delaware River in Bucks County, Pennsylvania (see Figure 1). From 1950 to 1991, United States Steel Corporation (now USX Corporation), operated a fully integrated steelmaking facility on the site. The steel plant was operated as a complete, stand-alone production facility. In 1992, USX terminated steelmaking at Fairless Works and shut down the "hot end" facilities. USX continues to operate its Sheet and Tin Division but all other steel production activities have been terminated. USX Realty Development has been redeveloping the Fairless Works site as an industrial park that will ultimately provide for more than 100 new industrial enterprises. Redevelopment of the Fairless Works site, located in a designated enterprise zone, will also enhance the region's ability to attract new businesses and stimulate the local economy.

Previous environmental investigations conducted at the Fairless Works site have identified metals and a few volatile and semivolatile organic compounds in the groundwater (see Tables 1, 2 and 3).

Act 2 lists Medium-Specific Concentrations (MSCs) for regulated substances in groundwater to be used as statewide health standards for groundwater remediation. Applicable MSCs are based on classification of the aquifer at the site as a "Used Aquifer" or a "Non-Use Aquifer". The results of an aquifer use study conducted at the site and in the surrounding area are summarized below and indicate that groundwater beneath the area is not used or currently planned to be used for agricultural or drinking water purposes. The MSCs for a non-use aquifer would therefore apply to the site if a non-use aquifer determination is issued.

## DATA SUPPORTING A NON-USE AQUIFER DETERMINATION

The Act 2 regulations specify that requirements listed in §250.303(c) must be met within the property and within a radius of 1,000 feet downgradient of "the points of compliance" plus any additional areas to which contamination has migrated or might reasonably migrate at concentrations that exceed the MSCs for groundwater used or currently planned to be used. To delineate the area where the non-use aquifer would be applied, Civil & Environmental Consultants, Inc. (CEC) designated the point of compliance at the Fairless Works site as the property boundary bordering the Delaware River. The downgradient area extending 1,000 feet from the compliance line encompasses the width of the Delaware River (see Figure 1).

To satisfy the Act 2 non-use aquifer determination requirements in §250.303(c)(1)-(3), the following information was collected for the site:

*§250.303(c)(1)* *No groundwater derived from wells or springs is used or currently planned to be used for drinking water or agricultural purposes.*

The Fairless Works site lies on an alluvial flood plain of the Delaware River. The geologic units that comprise the first major-water bearing unit beneath the site are the Holocene Alluvium, Trenton Gravel, Magothy Formation deposits, Upper Clay and Old Bridge Sand. Groundwater flow through these deposits exits as a water-table aquifer. The base of this water-table aquifer is defined by the presence of the Middle Clay member of the Raritan Formation. The clay is 10 to 30 feet thick and forms a confining unit or aquitard. The confined aquifer below consists of lower Cretaceous sands above bedrock. Groundwater beneath the site flows northeast, east, and southeast across the site toward the Delaware River. There are no withdrawals of groundwater for potable or non-potable purposes between the upgradient boundary of Fairless Works and the

Delaware River (BCM Engineers, 1997). Use of groundwater for drinking purposes was discontinued in the 1950s due to the naturally occurring concentrations of iron and manganese in the groundwater and the availability of surface water from the Delaware River. According to the results of an environmental investigation conducted by BCM Engineers at Fairless Works, the minimal saturated thickness of the aquifers at the site prohibits their development as a potential future source for groundwater supply.

A Pennsylvania Wellhead Use Survey was conducted by searching a computer database of the United States Geological Survey Water Well Inventory Program currently on file with the PADEP. The search radius encompassed the area within a 1-mile radius of Fairless Works. Results of the search are provided in Appendix A. Six domestic groundwater wells, located approximately one mile upgradient of the facility were identified in the database. No domestic wells were located within the downgradient boundary of Fairless Works.

BCM Engineers conducted a records search for domestic wells located across the Delaware River in New Jersey. No wells were identified within the 1,000-feet downgradient boundary of Fairless. The records search did identify two industrial wells within one mile of the site, and three domestic wells within ½-mile of the site (see Appendix A). The records indicate that one of the domestic wells is located in the water table aquifer (above the middle clay). However, the water table aquifer in New Jersey is cut off from Fairless Works by the Delaware River (BCM Engineers, 1997). The Delaware River serves as a hydraulic barrier, preventing groundwater migration from the Fairless property to the New Jersey shore area of the Delaware River.

*§250.303(c)(2)* *All downgradient properties are connected to a community water system.*

A municipal water supply evaluation was performed by reviewing maps obtained from the Falls Township Water Authority (see Appendix B) and by reviewing available surface water information for the area. Review of this information indicates that the Delaware River is used as a source of water supply for both potable and non-potable purposes. According to Mr. Martin Wit of the Falls Township Water Authority, the Township obtains water for commercial, industrial and residential use from the Delaware River by pumping river water from surface water intakes located downstream of Fairless and treating the water (municipal treatment system) prior to public distribution. Mr. Wit also indicated that Falls Township currently had no plans to develop groundwater in the area for future potable use.

The USX Corporation has two surface water intakes at Fairless Works, and withdraws water for potable and non-potable use to service the facility. Surface water withdrawn for potable use is chemically treated, filtered and disinfected. Surface water withdrawn for non-potable use (e.g., cooling water) is screened and stored in sedimentation basins.

*§250.303(c)(3)* *The area does not intersect a radius of ½ mile from a community water supply source or does not intersect an area designated by the PADEP as a zone 2 wellhead protection area under Chapter 109.*

Wellhead Protection Programs apply only to communities utilizing groundwater pumping wells or wellfields as a source of public water supply. Since Falls Township and the properties downgradient of Fairless obtain water directly from the Delaware River and do not use water supply wellfields for water distribution, the PADEP Wellhead Protection Area ordinances do not apply.

## CONCLUSIONS

Based on our review of the site, the results of the aquifer use study and the criteria set forth in the Act 2 regulations, the site satisfies the requirements for classification as a non-use aquifer. Groundwater is not used or currently planned to be used for agricultural or drinking water purposes.

Should the PADEP determine that the aquifer beneath the facility is a "non-use" aquifer, CEC has included information to satisfy the requirements outlined in §250.309 (related to MSCs for surface water). This information is summarized as follows:

*§250.309. MSCs for Surface Water*

Section 250.309 of the Act 2 regulations provide for determining compliance with surface water quality standards from a diffuse groundwater discharge into a stream. A mathematical equation referenced in the Act 2 Technical Guidance manual (PADEP, 1997) was used to estimate the fully mixed river concentrations of constituents of concern (COC) reaching the Delaware River from the Fairless Works site. The equation assumes that the total contaminant mass load into the river is constant and the diffuse flow into the cross-sectional area of the river is uniformly mixed. Results are conservative because the equation assumes no degradation of the contaminant and concentrations reaching the river are generally overestimated.

Mixed river concentrations in the Delaware River downstream of the Site were calculated using the following assumptions:

- background concentrations of constituents of concern in the Delaware River were nondetect;

- the highest reported groundwater concentration of each constituent of concern was assumed to be representative of groundwater quality discharging to the River. The 1996 groundwater analytical data were used to select the maximum COC concentration from an individual well on the property, regardless of its location relative to the river. This concentration was then entered into the transport equation to represent groundwater quality entering the river from the property boundary (worst case scenario);

- estimated flow of groundwater from the alluvial aquifer as 3.557 cubic feet/second (cfs) determined from the equation; Q = KIA, where K = 0.0116 feet/sec, I = 0.00562 and A = 544,000 $ft^2$ (aquifer properties data from BCM Engineers, 1997); and

- Delaware River "low flow" velocity was assumed to be 3,000 cfs. Due to tidal influences, a Q7-10 is not calculated for the Delaware River, therefore this low flow value was obtained from the U.S. Geological Survey database of Delaware River flow information (Reed, et al., 1998, U.S.Geological Survey). The database contained information spanning the last 80+ years.

The Darcian flow equation was used to calculate the flow of groundwater into the Delaware River. The equations and assumptions used in estimating groundwater flow and calculating mixed river constituent concentrations are presented in Table 4. The results of the equation indicate that concentrations of the constituents of concern are below the PADEP's surface water quality standards from Chapter 16 of Title 25 and below the Delaware River Basin Commission (DRBC) water quality criteria.

## REFERENCES

BCM Engineers, September 19, 1997. Phase I RCRA Facility Investigation Final Report (Draft), U.S. Steel Fairless Works, Fairless Hills, Pennsylvania (with April 1998 Supplement; still undergoing review by USEPA).

Commonwealth of Pennsylvania, Department of Environmental Protection, 1997. Technical Guidance Manual, Pennsylvania's Land Recycling Program. Final Draft, December 1997.

Reed, T.J., Centinaro, G.L., DeLuca, M.J., and Oden, J.H. 1998. Water Resources Data-New Jersey, Water Year 1997, Volume 1: Surface-Water Data. U.S. Geological Survey - WDR-NJ-97-1. 632 pp.

TABLE 4
MIXED RIVER TRANSPORT EQUATION RESULTS
FAIRLESS WORKS SITE
Fairless Hills, Pennsylvania

Equation:

$$C_{sw} = \frac{Q_{gw} \times C_{gw}}{Q_{sw}}$$ where,

$C_{sw}$ = surface water concentration
$C_{gw}$ = area weighted average concentration of contamination in plume (mg/L)
$Q_{gw}$= groundwater discharge from cross-sectional area of plume into stream ($ft^3$/sec, cfs)
$Q_{sw}$ = surface water quantity upstream of the site at design flow conditions (cfs);
Used historic low flow (3,000 cfs)*

Darcian Flow Equation: To Calculate Groundwater Flow into the River

| | | Values Used |
|---|---|---|
| $Q_{gw}$ = KIA | Q = flow into river (cfs) | |
| | K = hydraulic conductiivity (ft/s) | 1.157E-2 |
| | I = hydraulic gradient (ft/ft) | 0.0005652 |
| | A = area of groundwater seepage face ($ft^2$) (27,200x20) | 544,000 |

**$Q_{gw}$ =3.557 cfs**

| Parameter | Maximum Groundwater Concentration (ug/L) | Calculated Mixed River Concentration (ug/L) | PADEP Chapter 16 Surface Water Quality Human Health Criteria (ug/L) | PADEP Chapter 16 Surface Water Qual. Fish & Aquatic Criteria Con (ug/L) | Max (ug/L) | DRBC Surface Water Quality Standards (ug/L) |
|---|---|---|---|---|---|---|
| Arsenic | 46.9 | 0.0556 | 50 | NC | NC | 190 |
| Barium | 565 | 0.6700 | 1000 | 4100 | 20500 | --- |
| Beryllium | 12.6 | 0.0149 | --- | NC | NC | --- |
| Cadmium | 7 | 0.0083 | 10 | 1.43 | 8.40 | 1.61 |
| Chromium (III) | 323 | 0.3830 | --- | --- | --- | 130 |
| Cobalt | 160 | 0.1897 | --- | 19 | 95 | --- |
| Copper | 9.9 | 0.0117 | 1000 | 16.60 | 25.87 | 17.29 |
| Lead | 2.1 | 0.0025 | 50 | 4.07 | 104.43 | 16 |
| Mercury | 0.23 | 0.0003 | 0.144 | 0.012 | 2.1 | 0.012 |
| Nickel | 344 | 0.4079 | 600 | 228.99 | 2061.88 | 230 |
| Selenium | 5.3 | 0.0063 | --- | 4.6 | 18 | 5 |
| Silver | 4.1 | 0.0049 | 200 | --- | 7.41 | 8.72 |
| Vanadium | 5.2 | 0.0062 | --- | --- | --- | --- |
| Zinc | 1210 | 1.435 | 5000 | 152.33 | 166.82 | 154 |
| Iron | 28000 | 33.20 | --- | --- | --- | --- |
| Manganese | 20300 | 24.07 | --- | --- | --- | --- |
| Phenol | 8 | 0.0095 | 300 | 20 | 100 | 20900 |
| o-Toluidine | 25 | 0.0296 | --- | --- | --- | --- |
| Methylene Chloride | 5 | 0.0059 | --- | 2368 | 11840 | 2090 |
| Trichloroethylene | 33 | 0.0391 | 3 | 450 | 2250 | 2.7 |

* = No Q7-10 value available for Delaware River due to tidal influence; used historic low flow information from Reed, et al., 1998 (USGS); flow information data spanning 80+ years

NC = Specific data (speciation, LC50) not available to calculate value

# APPENDIX A

# WELLHEAD USE SURVEY

# FAIRLESS WORKS AREA

*03-Dec-98*

| COUNTY | WELL NUMBER | LATITUDE | LONGITUDE | MUNICIPALITY | QUADRANGLE | OWNER | WATER USE | USE OF SITE | WELL DEPTH (feet) | YIELD (gpm) | DRILLER | DATE DRILLED | TOPOGRAPHY | LITHOLOGY | WELL NUMBER | FORMATION |
|---|---|---|---|---|---|---|---|---|---|---|---|---|---|---|---|---|
| BUCKS | 5824N | 400738 | 745006 | BRISTOL | TRENTON EAST | DIEGIDIO J | INDUSTRIAL | WITHDRAWAL | 32 | 10 | 111 | 5-81 | VALLEY FLAT | SAND | 5824N | TRENTON GRAVEL |
| BUCKS | X 0154 | 400734 | 745104 | BRISTOL | TRENTON WEST | SIMONS D BLDR | | WITHDRAWAL | 103 | 10 | 0111 | 00-00-68 | STREAM CHANNEL | | X 0154 | TRENTON GRAVEL |
| BUCKS | X 0177 | 400821 | 744851 | BRISTOL | TRENTON WEST | LASKOWSKI T | | WITHDRAWAL | 34 | | 0729 | 00-00-67 | HILLSIDE | | X 0177 | TRENTON GRAVEL |
| BUCKS | X 0180 | 400755 | 745007 | BRISTOL | TRENTON WEST | MAGILO MRS C | | WITHDRAWAL | 27 | 20 | 0111 | 00-00-69 | HILLSIDE | | X 0180 | TRENTON GRAVEL |
| BUCKS | X 0186 | 400731 | 745032 | BRISTOL | TRENTON WEST | CRAIG H D | | WITHDRAWAL | 27 | 30 | 0111 | 00-00-67 | HILLSIDE | | X 0186 | TRENTON GRAVEL |
| BUCKS | X 1683 | 400732 | 745015 | BRISTOL | TRENTON WEST | INC POOLS PAULS | | WITHDRAWAL | 33 | 20 | 0111 | 00-00-71 | HILLSIDE | | X 1683 | UNKNOWN |
| BUCKS | X 3940 | 400804 | 745016 | BRISTOL | TRENTON WEST | LEVITTOWN HDWR | | WITHDRAWAL | 40 | 20 | 0416 | 00-00-00 | | | X 3940 | ALLUVIUM |
| BUCKS | 4739N | 401049 | 745212 | FALLS | TRENTON WEST | ARBY'S RESTAURANT | PUBLIC SUPPLY | WITHDRAWAL | 150 | 12 | 330 | 10-9-80 | HILLSIDE | | 4739N | PENSAUKEN FORMATION |
| BUCKS | 5466N | 401148 | 744823 | FALLS | TRENTON WEST | COMMONWEALTH | | WITHDRAWAL | 450 | 7 | 330 | 4-4-84 | HILLSIDE | | 5466N | PENSAUKEN FORMATION |
| BUCKS | 5816N | 401051 | 744721 | FALLS | TRENTON WEST | PIZZI F | INDUSTRIAL | WITHDRAWAL | 40 | 25 | 413 | 7-25-79 | VALLEY FLAT | SAND | 5816N | TRENTON GRAVEL |
| BUCKS | 5817N | 401051 | 744722 | FALLS | TRENTON WEST | MAHAN | | WITHDRAWAL | 37 | 25 | 416 | 4-79 | VALLEY FLAT | SAND | 5817N | TRENTON GRAVEL |
| BUCKS | 6559N | 401025 | 744731 | FALLS | TRENTON WEST | ATLANTIC CONCRETE | INDUSTRIAL | WITHDRAWAL | 35 | 25 | 416 | 6-86 | FLAT SURFACE | SAND | 6559N | FLUVIAL DEPOSITS |
| BUCKS | 6560N | 401021 | 744732 | FALLS | TRENTON WEST | ATLANTIC CONCRETE | INDUSTRIAL | WITHDRAWAL | 392 | 27 | 416 | 1-86 | FLAT SURFACE | SAND | 6560N | FLUVIAL DEPOSITS |
| BUCKS | 6561N | 400927 | 744826 | FALLS | TRENTON WEST | BEGLEY E | | WITHDRAWAL | 34 | 25 | 416 | 12-85 | FLAT SURFACE | SAND | 6561N | FLUVIAL DEPOSITS |
| BUCKS | 6562N | 401015 | 744740 | FALLS | TRENTON WEST | SIEGMANN R | | WITHDRAWAL | 40 | 30 | 416 | 10-85 | FLAT SURFACE | SAND | 6562N | FLUVIAL DEPOSITS |
| BUCKS | 6563N | 401100 | 744848 | FALLS | TRENTON WEST | ESTEE R | | WITHDRAWAL | 35 | 15 | 416 | 9-85 | FLAT SURFACE | SAND | 6563N | FLUVIAL DEPOSITS |
| BUCKS | X 0410 | 401014 | 754840 | FALLS | TRENTON WEST | WARNER COMPANY | | WITHDRAWAL | 27 | 42 | 0111 | 00-00-68 | TERRACE | | X 0410 | TERRACE DEPOSITS |
| BUCKS | X 0414 | 401128 | 755212 | FALLS | TRENTON WEST | ANDRES JOHN | | WITHDRAWAL | 54 | 80 | 0111 | 00-00-69 | HILLSIDE | | X 0414 | BALTIMORE GNEISS |
| BUCKS | X 0415 | 401150 | 754826 | FALLS | TRENTON WEST | ARBERTER | | WITHDRAWAL | 55 | 10 | 0111 | 00-00-69 | TERRACE | | X 0415 | TERRACE DEPOSITS |
| BUCKS | X 0417 | 401027 | 754731 | FALLS | TRENTON WEST | WARNER CO RENT | | WITHDRAWAL | 40 | 20 | 0111 | 00-00-69 | TERRACE | | X 0417 | TERRACE DEPOSITS |
| BUCKS | X 0419 | 401051 | 755212 | FALLS | TRENTON WEST | SEITZ CROMPTONY | | WITHDRAWAL | 330 | 3 | 0228 | 00-00-66 | HILLSIDE | | X 0419 | OLIGOCLASE MICA SCHIST-WISSAHICKON FORMATION |
| BUCKS | X 0420 | 401229 | 754811 | FALLS | TRENTON WEST | EDWARDS | | WITHDRAWAL | 34 | 15 | 0111 | 00-00-68 | TERRACE | | X 0420 | TERRACE DEPOSITS |
| BUCKS | X 0422 | 401215 | 754615 | FALLS | TRENTON WEST | RUSTAY ARTHUR | | WITHDRAWAL | 34 | 10 | 0111 | 00-00-66 | TERRACE | | X 0422 | TERRACE DEPOSITS |
| BUCKS | X 0423 | 401048 | 754746 | FALLS | TRENTON WEST | CREGAR | | WITHDRAWAL | 35 | 15 | 0111 | 00-00-67 | TERRACE | | X 0423 | TERRACE DEPOSITS |
| BUCKS | X 0424 | 400925 | 754843 | FALLS | TRENTON WEST | WINSLOW JOHN | | WITHDRAWAL | 32 | 25 | 0111 | 00-00-68 | TERRACE | | X 0424 | TERRACE DEPOSITS |
| BUCKS | X 0425 | 400953 | 754810 | FALLS | TRENTON WEST | WARNER CO | | WITHDRAWAL | 28 | 10 | 0111 | 00-00-68 | TERRACE | | X 0425 | TERRACE DEPOSITS |
| BUCKS | X 0426 | 400944 | 754803 | FALLS | TRENTON WEST | LUSEISANO BROS | | WITHDRAWAL | 30 | 20 | 0111 | 00-00-86 | TERRACE | | X 0426 | TERRACE DEPOSITS |
| BUCKS | X 0427 | 400928 | 754843 | FALLS | TRENTON WEST | DIMARCO | | WITHDRAWAL | 42 | 15 | 0111 | 00-00-86 | TERRACE | | X 0427 | TERRACE DEPOSITS |
| BUCKS | X 1292 | 400923 | 754840 | FALLS | TRENTON WEST | WARNER C | | WITHDRAWAL | 27 | 40 | 0111 | 00-00-69 | TERRACE | | X 1292 | TERRACE DEPOSITS |
| BUCKS | X 3880 | 401046 | 744822 | FALLS | TRENTON WEST | PENN VALLEY CON | INDUSTRIAL | WITHDRAWAL | 405 | 13 | 0111 | 00-00-00 | | | X 3880 | OLIGOCLASE MICA SCHIST-WISSAHICKON FORMATION |
| BUCKS | X 3881 | 400822 | 744847 | FALLS | TRENTON WEST | PIROTTI BEN | | WITHDRAWAL | 52 | | 0111 | 00-00-00 | | | X 3881 | OLIGOCLASE MICA SCHIST-WISSAHICKON FORMATION |
| BUCKS | X 3882 | 400832 | 744852 | FALLS | TRENTON WEST | PRACH FRANK | | WITHDRAWAL | 32 | 25 | 0111 | 00-00-00 | | | X 3882 | OLIGOCLASE MICA SCHIST-WISSAHICKON FORMATION |
| BUCKS | X 3883 | 401152 | 744639 | FALLS | TRENTON WEST | KOHLER AIR PROD | INDUSTRIAL | WITHDRAWAL | 47 | 170 | 0348 | 00-00-00 | | | X 3883 | ALLUVIUM |
| BUCKS | X 3884 | 401054 | 745143 | FALLS | TRENTON WEST | SWENSON AL | | WITHDRAWAL | 45 | 50 | 0111 | 00-00-00 | | | X 3884 | OLIGOCLASE MICA SCHIST-WISSAHICKON FORMATION |
| BUCKS | X 3885 | 401051 | 744722 | FALLS | TRENTON WEST | SCHERMERHORN L | | WITHDRAWAL | 100 | 5 | 0348 | 00-00-00 | | | X 3885 | OLIGOCLASE MICA SCHIST-WISSAHICKON FORMATION |
| BUCKS | 4731N | 401148 | 744817 | LOWER MAKEFIELD | TRENTON EAST | HARBISON FORD | INDUSTRIAL | WITHDRAWAL | 170 | 20 | 330 | 1-80 | HILLSIDE | | 4731N | OLIGOCLASE MICA SCHIST-WISSAHICKON FORMATION |
| BUCKS | X 0524 | 401310 | 745209 | LOWER MAKEFIELD | TRENTON WEST | VALIGA MARGARET | | WITHDRAWAL | 96 | 15 | 0111 | 00-00-66 | HILLSIDE | | X 0524 | STOCKTON FORMATION |
| BUCKS | X 0525 | 401250 | 745122 | LOWER MAKEFIELD | TRENTON WEST | DULIBO MICHAEL | | WITHDRAWAL | 111 | 30 | 0111 | 00-00-67 | HILLSIDE | | X 0525 | STOCKTON FORMATION |
| BUCKS | X 1351 | 401409 | 745209 | LOWER MAKEFIELD | TRENTON WEST | CORUS ANDREW | | WITHDRAWAL | 120 | 10 | 0111 | 00-00-70 | HILLSIDE | | X 1351 | STOCKTON FORMATION |
| BUCKS | X 1352 | 401435 | 755340 | LOWER MAKEFIELD | TRENTON WEST | WATSON ANDREW | | WITHDRAWAL | 85 | 75 | 0111 | 00-00-70 | HILLSIDE | | X 1352 | STOCKTON FORMATION |

| CASING (feet) | DIAMETER (inches) | CASING (feet) | DIAMETER (inches) | SWL (feet) | PRODUCTION WL (feet) | DRAWDOWN (feet) | TEST LENGTH (hours) | BEDROCK (feet) | WBZ1 (feet) | WBZ2 (feet) | WBZ3 (feet) |
|---|---|---|---|---|---|---|---|---|---|---|---|
| 32 | 6 | | | 15 | 17 | 2 | 2 | | 33 | | |
| 80 | 6 | | | 20 | | 55 | 2 | 78 | 16 | 85 | 102 |
| 34 | 6 | | | | | 3 | 2 | | 18 | 24 | 34 |
| 27 | 6 | | | 19 | | 3 | 2 | 27 | 8 | 27 | |
| 27 | 6 | | | 10 | | 4 | 2 | 27 | 10 | 27 | |
| 33 | 6 | | | 18 | | 5 | 2 | 32 | 12 | 33 | |
| 40 | 6 | | | 12 | | | 1 | | 30 | | |
| 32 | 6 | | | | | | 4 | | | | |
| 60 | 6 | | | 62 | 82 | 20 | 4 | 42 | | | |
| 34 | 6 | | | 5 | 10 | 10 | 4 | | 39 | | |
| 37 | 6 | | | 13 | 13 | | 2 | | 15 | 30 | |
| 35 | 6 | | | 20 | 20 | | 1 | | 25 | 33 | |
| 98 | 6 | | | 30 | 360 | 330 | 1.5 | 18 | 35 | 175 | 342 |
| 34 | 6 | | | 10 | 10 | | 1 | | 26 | | |
| 41 | 6 | | | 21 | 21 | | 1.5 | | 30 | | |
| 35 | 6 | | | 18 | 25 | 7 | 1.5 | | 25 | 33 | |
| 27 | 6 | | | 15 | | 7 | 4 | 27 | 27 | | |
| 30 | 6 | | | 8 | | 30 | 2 | 26 | 15 | 24 | 50 |
| 55 | 6 | | | 29 | | 21 | 2 | 54 | 54 | | |
| 40 | 6 | | | 28 | | 7 | 2 | 40 | 36 | 40 | |
| 31 | 6 | | | 14 | | | 8 | 25 | 40 | 280 | |
| 34 | 6 | | | 17 | | 9 | 2 | 30 | 22 | 28 | 34 |
| 34 | 6 | | | 29 | | 1 | 2 | 33 | 19 | 34 | |
| 35 | 6 | | | 18 | | 9 | 2 | 35 | 18 | 30 | 35 |
| 32 | 6 | | | 12 | | 9 | 2 | 20 | 20 | 28 | 32 |
| 28 | 6 | | | 15 | | 10 | 2 | 28 | 10 | 28 | |
| 30 | 6 | | | 19 | | 6 | 2 | 29 | 22 | 30 | |
| 42 | 6 | | | 12 | | 16 | 4 | 41 | 25 | 32 | |
| 27 | 6 | | | 12 | | 8 | 2 | 26 | 8 | 27 | |
| 47 | 6 | | | 10 | | | 2 | 47 | 32 | 125 | 295 |
| 48 | 6 | | | 14 | | | 2 | | 14 | 32 | 42 |
| 32 | 6 | | | 13 | | | 2 | 14 | 24 | 32 | |
| 37 | 8 | | | 24 | | | 4 | | 32 | 35 | 40 |
| 32 | | | | 17 | | | 2 | 10 | 15 | 38 | 44 |
| 67 | 6 | | | 24 | | | 2 | 67 | | | |
| 70 | 6 | | | | | | | | | | |
| 47 | 6 | | | 16 | | 39 | 2 | 40 | 20 | 45 | 95 |
| | | | | | | | | 20 | 55 | 80 | 109 |
| 60 | 6 | | | 30 | | 70 | 2 | 11 | 39 | 97 | 115 |
| 30 | 6 | | | 32 | | 23 | 2 | 10 | 47 | 67 | 82 |

| COUNTY | WELL NUMBER | LATITUDE | LONGITUDE | MUNICIPALITY | QUADRANGLE | OWNER | WATER USE | USE OF SITE | WELL DEPTH (feet) | YIELD (gpm) | DRILLER | DATE DRILLED | TOPOGRAPHY | LITHOLOGY | WELL NUMBER | FORMATION |
|---|---|---|---|---|---|---|---|---|---|---|---|---|---|---|---|---|
| BUCKS | X 3867 | 401317 | 744834 | LOWER MAKEFIELD | TRENTON WEST | SANFORD ROBERT | | WITHDRAWAL | 185 | 20 | 0331 | 00-00-00 | | | X 3867 | STOCKTON FORMATION |
| BUCKS | X 3868 | 401327 | 745047 | LOWER MAKEFIELD | TRENTON WEST | YARDLEY WATER C | INDUSTRIAL | WITHDRAWAL | 90 | 20 | 0348 | 00-00-00 | | | X 3868 | STOCKTON FORMATION |
| BUCKS | X 3870 | 401443 | 745024 | LOWER MAKEFIELD | TRENTON WEST | GARLITS E E | | WITHDRAWAL | 80 | 15 | 0348 | 00-00-00 | | | X 3870 | STOCKTON FORMATION |
| BUCKS | X 3871 | 401210 | 745011 | LOWER MAKEFIELD | TRENTON WEST | BROADWAY DAVID | | WITHDRAWAL | 155 | 20 | 0331 | 00-00-00 | | | X 3871 | OLIGOCLASE MICA SCHIST-WISSAHICKON FORM ATION |
| BUCKS | X 3872 | 401427 | 745012 | LOWER MAKEFIELD | TRENTON WEST | FISH T J | | WITHDRAWAL | 100 | 25 | 0111 | 00-00-00 | | | X 3872 | STOCKTON FORMATION |
| BUCKS | X 3498 | 401116 | 745002 | MIDDLETOWN | TRENTON WEST | ROBERT-AMER CRP | INDUSTRIAL | TEST | 42 | 5 | 0348 | 00-00-00 | | | X 3498 | ALLUVIUM |
| BUCKS | X 3499 | 401121 | 745002 | MIDDLETOWN | TRENTON WEST | ROBERT-AMER CRP | INDUSTRIAL | TEST | 41 | 5 | 0348 | 00-00-00 | | | X 3499 | ALLUVIUM |
| BUCKS | X 1056 | 400848 | 754843 | TULLYTOWN | TRENTON WEST | BLOSTES DEL VA | | WITHDRAWAL | 30 | 70 | 0111 | 00-00-68 | TERRACE | | X 1056 | UNKNOWN |
| BUCKS | X 1609 | 400945 | 754848 | TULLYTOWN | TRENTON WEST | MITCHELL TED | | WITHDRAWAL | 31 | 12 | 0111 | 00-00-70 | TERRACE | | X 1609 | UNKNOWN |
| BUCKS | X 1610 | 400903 | 754833 | TULLYTOWN | TRENTON WEST | KUNIS RALPH | | WITHDRAWAL | 31 | 50 | 0111 | 00-00-70 | TERRACE | | X 1610 | UNKNOWN |

| CASING (feet) | DIAMETER (inches) | CASING (feet) | DIAMETER (inches) | SWL (feet) | PRODUCTION WL (feet) | DRAWDOWN (feet) | TEST LENGTH (hours) | BEDROCK (feet) | WBZ1 (feet) | WBZ2 (feet) | WBZ3 (feet) |
|---|---|---|---|---|---|---|---|---|---|---|---|
| 43 | 6 | | | 75 | | | 2 | 40 | 90 | 120 | 135 |
| 34 | 6 | | | 30 | | | 1 | 19 | 36 | 70 | |
| 38 | 6 | | | 12 | | | | 34 | 65 | 80 | |
| 37 | 6 | | | 20 | | | 2 | 32 | 10 | 70 | 90 |
| 31 | 6 | | | 7 | | | 2 | | 61 | 85 | |
| 32 | 4 | | | 19 | | 8 | 2 | | 38 | | |
| 31 | 4 | | | 16 | | 8 | 2 | | 36 | | |
| | 6 | | | 13 | | 9 | 4 | 30 | 18 | 30 | |
| 30 | 6 | | | 10 | | 15 | 2 | 30 | 8 | 31 | |
| 31 | 6 | | | 8 | | 12 | 2 | 31 | 8 | 27 | 31 |

## TABLE 6-1

## PENNSYLVANIA AND NEW JERSEY WATER SUPPLY WELLS PROXIMATE[1] TO FAIRLESS WORKS

| Well Owner | Address | Use | Depth (ft) | Aquifer[2] | Yield or Capacity (GPM) |
|---|---|---|---|---|---|
| **Pennsylvania** | | | | | |
| Kohler Air Products | Falls Township | I | 47 | W | 170 |
| Fairless Credit Union | Falls Township | D | --- | --- | --- |
| **New Jersey** | | | | | |
| North American Marine Salvage | Bordentown | D | 120 | C | 35 |
| Peter Sukola | 68 Delaware Ave. Bordentown | D | 117 | C | 65 |
| Matthew Rue | Main Street Fieldsboro | D | 65 | W | 35 |
| Ocean Spray Cranberries, Inc. | Park Street Bordentown, PA | I | 267 | C | 300 |
| Stepan Chemical Co. | Clark St. & Broadway Fieldsboro | I | 185 | C | 100 |

(1) Domestic (D) wells within one-half mile and larger capacity Municipal (M) or Industrial (I) wells within one mile
(2) Aquifer: W = Water Table, C = Confined Aquifer

Source: BCM Engineers Inc., Project No. 00-5039-7023

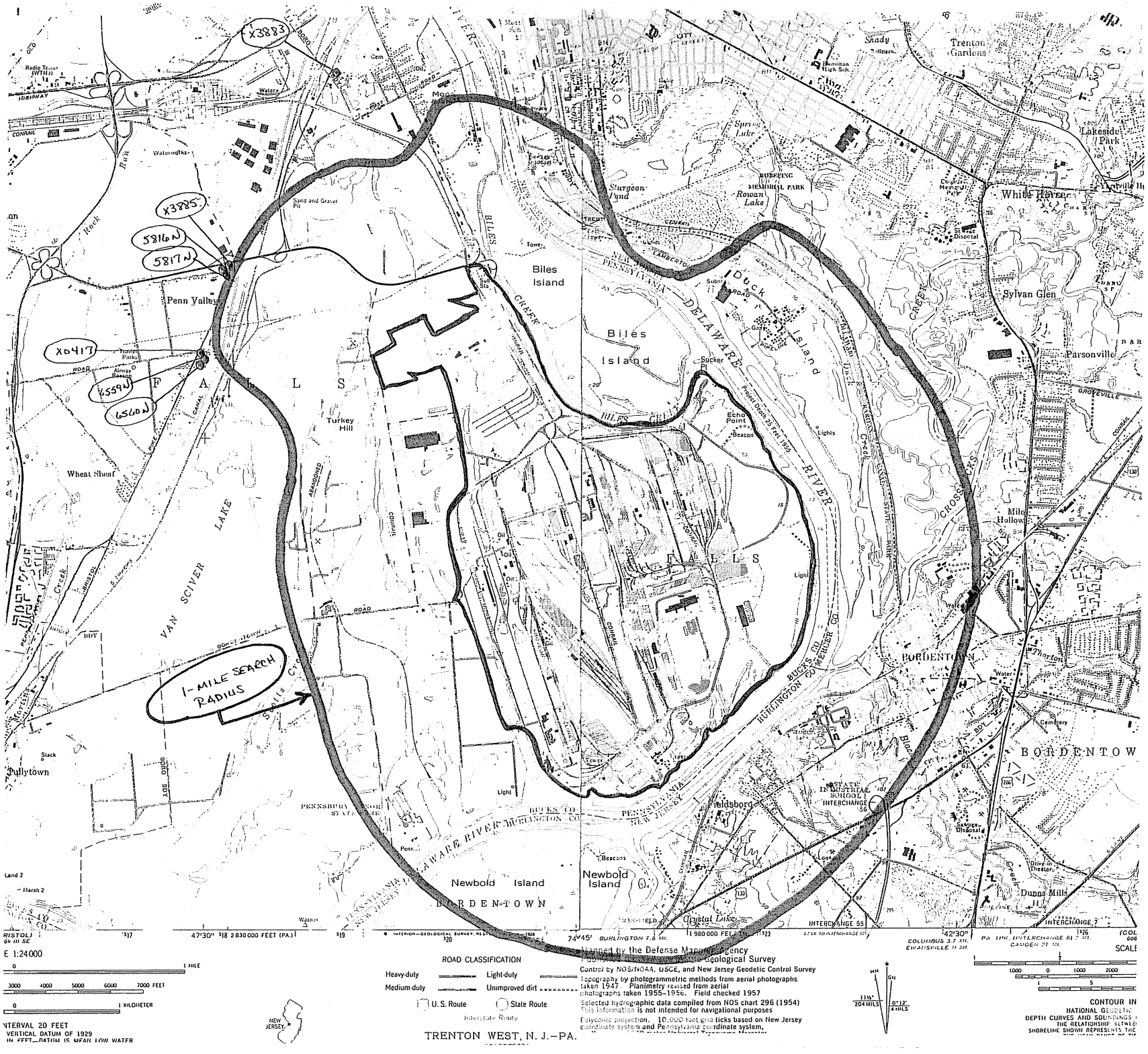
X3883
X3885
5816N
5817N
X6417
6559N
6560N
1-MILE SEARCH RADIUS
Trenton Gardens
Lakeside Park
White Horse
Sylvan Glen
Parsonville
Biles Island
Duck Island
Sturgeon Pond
Rowan Lake
Penn Valley
Turkey Hill
Wheat Sheaf
VAN SCIVER LAKE
Echo Point
Mile Hollow
BORDENTOWN
Fieldsboro
Newbold Island
Crystal Lake
Dunns Mills
Pullytown
DELAWARE RIVER
BILES CREEK
CROSS CREEK
BURLINGTON CO
BUCKS CO
PENNSYLVANIA
NEW JERSEY
Mapped by the Defense Mapping Agency
Topography by Geological Survey
Control by NOS/NOAA, USCE, and New Jersey Geodetic Control Survey
Topography by photogrammetric methods from aerial photographs taken 1947. Planimetry revised from aerial photographs taken 1955–1956. Field checked 1957
Selected hydrographic data compiled from NOS chart 296 (1954)
This information is not intended for navigational purposes
Polyconic projection. 10,000 foot grid ticks based on New Jersey coordinate system and Pennsylvania coordinate system.
ROAD CLASSIFICATION
Heavy-duty
Medium-duty
Light-duty
Unimproved dirt
U.S. Route
State Route
Interstate Route
TRENTON WEST, N. J.–PA.
CONTOUR IN
NATIONAL GEODETIC
DEPTH CURVES AND SOUNDINGS
THE RELATIONSHIP BETWEEN
SHORELINE SHOWN REPRESENTS THE
INTERVAL 20 FEET
VERTICAL DATUM OF 1929
IN FEET—DATUM IS MEAN LOW WATER
SCALE 1:24000
1 MILE
1 KILOMETER

TABLE 1
SUMMARY OF GROUNDWATER QUALITY RESULTS
VOLATILE ORGANIC COMPOUNDS
USX FAIRLESS WORKS

FAIRLESS HILLS, PA

| Well ID | Date Sampled | ACT 2 MSC | Methylene Chloride | Carbon Disulfide | 1,1-Dichloro-ethylene | 1,1-Dichloro-ethane | trans, 1-2 Dichloroethylene | Chloro-form | 1,1,1-Trichloroethane | Trichloro-ethylene | Benzene | Tetrachloro-ethylene | Toluene | Xylenes (total) |
|---|---|---|---|---|---|---|---|---|---|---|---|---|---|---|
| | | Used NR (µg/L) | 5 | 4100 | 7 | 110 | 70 | 100 | 200 | 5 | 5 | 5 | 1000 | 10000 |
| | | Non-use, NR (µg/L) | 500 | 4100 | 70 | 1100 | 700 | 1000 | 2000 | 50 | 500 | 50 | 100000 | 180000 |
| | | Units | | | | | | | | | | | | |
| MW1-25-22 | 12/19/96 | µg/L | 3 | | | | | | | | | | | |
| MW1-26-27 | 12/19/96 | µg/L | 3 | | | | | | | | | | | |
| MW1-28-74 | 12/19/96 | µg/L | 2 | | | | | | | | | | | |
| MW1-28-74D | 12/19/96 | µg/L | 3 | | | | | 2 | | | | | | |
| MW2-1-22 | 12/11/96 | µg/L | 3 | | | | | | | | | | | |
| MW2-3-33 | 12/11/96 | µg/L | 2 | | | | | | | | | | | |
| MW4-10-23 | 12/10/96 | µg/L | 4 | | | | | | | | | | | |
| MW4-11-33 | 12/11/96 | µg/L | 2 | | | 3 | 2 | | 1 | 11 | | 2 | | |
| MW4-14-36 | 12/11/96 | µg/L | 5 | | | | | | | | | | | |
| MW4-15-119 | 12/11/96 | µg/L | 4 | | | | | | | | | | 1 | |
| MW4-2-24 | 12/11/96 | µg/L | 2 | | | | | | | | | | | |
| MW4-30-63 | 12/10/96 | µg/L | 4 | | | | | | | | | | | |
| MW6-2-27 | 12/10/96 | µg/L | 3 | 6 | | 1 | 3 | | | 3 | | | | |
| MW6-5-28 | 12/09/96 | µg/L | 4 | 4 | | | 1 | | | 6 | | | | |
| MW6-6-24 | 12/10/96 | µg/L | 4 | | | 2 | 4 | | | 13 | | 2 | | |
| MW6-12-42 | 12/11/96 | µg/L | 5 | | | | | | | | | | | |
| MW6-20-37 | 12/11/96 | µg/L | 4 | | | | | | | | | | | |
| MW6-29-73 | 12/10/96 | µg/L | 3 | | 3 | 4 | 12 | 4 | 2 | 33 | | | | |
| MW7-4-26 | 12/09/96 | µg/L | 4 | | | | | | | | | | | |
| MW7-4-26D | 12/09/96 | µg/L | 4 | | | | | | | | | | | |
| MW7-5-28 | 12/09/96 | µg/L | 5 | | | | | | | | | | | |
| MW1-12-29 | 12/12/96 | µg/L | 2 | | | | | | | | | | | |
| MW1-15-29 | 12/12/96 | µg/L | 2 | | | | | | | | | | | |
| MW1-22-173 | 12/12/96 | µg/L | 2 | | | | | | | | | | | |
| MW1-23-47 | 12/18/96 | µg/L | 2 | | | | | | | | | | | |
| MW5-18-26 | 12/18/96 | µg/L | 3 | | | 25 | | | | | 3 | | | |
| MW5-41-19 | 12/19/96 | µg/L | 2 | | | | | | | | | | | |
| MW1-24-23 | 12/12/96 | µg/L | 3 | | | | | | 9 | | | | | |
| MW1-27-19 | 12/18/96 | µg/L | 3 | | | | | | | | | | | |
| MW2-4-77 | 12/18/96 | µg/L | 2 | | | | | | | | | | | |
| MW3-2-27 | 12/18/96 | µg/L | 2 | | | | | | | | | | | |
| MW4-37-29 | 12/18/96 | µg/L | 2 | | | | | | | | | | | 1 |

usx-tab1.wk4

MSC = Medium-Specific Concentrations for Regulated Substances in Groundwater

Exceeds Act 2 MSC for Non-residential Used Aquifer

Exceeds Act 2 MSC for Non-residential Non-Use Aquifer

TABLE 1
SUMMARY OF GROUNDWATER QUALITY RESULTS
VOLATILE ORGANIC COMPOUNDS
USX FAIRLESS WORKS

FAIRLESS HILLS, PA

TABLE 2
SUMMARY OF GROUNDWATER QUALITY RESULTS
SEMIVOLATILE ORGANIC COMPOUNDS
USX FAIRLESS WORKS

FAIRLESS HILLS, PA

| Well ID | Date Sampled | ACT 2 MSC Used NR (µg/L) | Bis(2-ethyl, hexyl) phthalate | Acenaph-thene | o-Toluidine | Diethyl-phthalate | Di-n-butyl-phthalate | Phenol | 3&4 methyl phenol | Naphth-alene | 1,4-Naph-thoquinone |
|---|---|---|---|---|---|---|---|---|---|---|---|
| | | | 6 | 3500 | 14 | 5000 | 10000 | 4000 | No | 20 | No |
| | | Non-use, NR (µg/L) | 340 | 3500 | 14000 | 900000 | 13000 | 400000 | Standard | 20000 | Standard |
| | | Units | | | | | | | | | |
| MW1-25-22 | 12/19/96 | µg/L | 4 | | | | | | | | |
| MW1-26-27 | 12/19/96 | µg/L | | | | | | | | | |
| MW1-28-74 | 12/19/96 | µg/L | | | | | | | | | |
| MW1-28-74D | 12/19/96 | µg/L | | | | | | | | | |
| MW2-1-22 | 12/11/96 | µg/L | | | | | | | | | |
| MW2-3-33 | 12/11/96 | µg/L | | | | 2 | | | | | |
| MW4-10-23 | 12/10/96 | µg/L | 2 | | | | | | | | |
| MW4-11-33 | 12/11/96 | µg/L | | | | | | | | | |
| MW4-14-36 | 12/11/96 | µg/L | 1 | | | | | | | | |
| MW4-15-119 | 12/11/96 | µg/L | 1 | | | | | | | | |
| MW4-2-24 | 12/11/96 | µg/L | | | | | | | | | |
| MW4-30-63 | 12/10/96 | µg/L | 2 | | | | | | | | |
| MW6-2-27 | 12/10/96 | µg/L | | | | | | | | | |
| MW6-5-28 | 12/09/96 | µg/L | | | | | | | | | |
| MW6-6-24 | 12/10/96 | µg/L | | | | | | | | | |
| MW6-12-42 | 12/11/96 | µg/L | | | | | | | | | |
| MW6-20-37 | 12/11/96 | µg/L | 2 | | | | | | | 1 | 19 |
| MW6-29-73 | 12/10/96 | µg/L | | | | | | | | | |
| MW7-4-26 | 12/09/96 | µg/L | | | | | | | | | |
| MW7-4-26D | 12/09/96 | µg/L | | | | | | | | | |
| MW7-5-28 | 12/09/96 | µg/L | | | | | | | | | |
| MW1-12-29 | 12/12/96 | µg/L | | | | | | | | | |
| MW1-15-29 | 12/12/96 | µg/L | | | | | | | | | |
| MW1-22-173 | 12/12/96 | µg/L | | | | | | | | | |
| MW1-23-47 | 12/18/96 | µg/L | | | | | | | | | |
| MW5-18-26 | 12/18/96 | µg/L | | | | | | 8 | 1 | 1 | |
| MW5-41-19 | 12/19/96 | µg/L | | | | | | | | | |
| MW1-24-23 | 12/12/96 | µg/L | 1 | | | | | | | | |
| MW1-27-19 | 12/18/96 | µg/L | | | | | | | | | |
| MW2-4-77 | 12/18/96 | µg/L | 3 | | | | | | | | |
| MW3-2-27 | 12/18/96 | µg/L | | 1 | 25 | | 1 | | | | |
| MW4-37-29 | 12/18/96 | µg/L | | | | | | | | | |

usx-tab2.wk4

MSC = Medium-Specific Concentrations for Regulated Substances in Groundwater

Exceeds Act 2 MSC for Non-residential Used Aquifer

Exceeds Act 2 MSC for Non-residential Non-Use Aquifer

TABLE 2
SUMMARY OF GROUNDWATER QUALITY RESULTS
SEMIVOLATILE ORGANIC COMPOUNDS
USX FAIRLESS WORKS

FAIRLESS HILLS, PA

TABLE 3
SUMMARY OF GROUNDWATER QUALITY RESULTS
METALS
USX FAIRLESS WORKS

FAIRLESS HILLS, PA

| Well ID | Date Sampled | ACT 2 MSC Used NR (ug/L) Non-use, NR (ug/L) | Antimony 6 6000 | Arsenic 50 50000 | Barium 2000 2000000 | Beryllium 4 4000 | Cadmium 5 5000 | Chromium 100 100000 | Cobalt 6100 6100000 | Copper 1000 1000000 | Lead 5 5000 | Mercury 2 2000 | Nickel 100 100000 | Selenium 50 50000 | Silver 100 100000 | Thallium 2 2000 | Vanadium 5.8 5800 | Zinc 2000 2000000 | Tin 61000 61000000 |
|---|---|---|---|---|---|---|---|---|---|---|---|---|---|---|---|---|---|---|---|
| | | Unit | | | | | | | | | | | | | | | | | |
| MW1-25-22 | 12/19/96 | µg/L | | | 109 | | 1.1 | | 1.9 | 5.8 | 0.8 | | | 2.3 | | | | 120 | |
| MW1-26-27 | 12/19/96 | µg/L | | | 58.6 | | 0.54 | | | | 1 | 0.22 | | | | | | | |
| MW1-28-74 | 12/19/96 | µg/L | | | 21.2 | | 0.59 | | 2.7 | 4 | | | 7.4 | | | | 2.2 | | |
| MW1-28-74D | 12/19/96 | µg/L | | | 21.3 | | 0.8 | | 3.3 | 5.9 | | 0.21 | 4 | | | | 2.6 | | |
| MW2-1-22 | 12/11/96 | µg/L | | 9.8 | 56.4 | | 0.37 | | 2.7 | 6.4 | | | 6.9 | | 2 | | 4.4 | 10.4 | |
| MW2-3-33 | 12/11/96 | µg/L | | 1.3 | 128 | | 0.75 | | 3 | 5.2 | | | 16.6 | | | | | 131 | |
| MW4-10-23 | 12/10/96 | µg/L | | 9 | 146 | | | | 2.6 | 4.1 | | | 2.4 | | | | 5.2 | 63.6 | |
| MW4-11-33 | 12/11/96 | µg/L | | 3.3 | 203 | 12.6 | 7 | | 515 | 6.7 | | | 344 | | | | 3.3 | 1210 | |
| MW4-14-36 | 12/11/96 | µg/L | | 7.4 | 118 | | 0.32 | | 7 | 6.6 | | | 2.6 | | | | 2.3 | 91.9 | |
| MW4-15-119 | 12/11/96 | µg/L | | | 226 | | 0.59 | 1.6 | 4.3 | 6.7 | | | 5.9 | | 2.8 | | 2.7 | 101 | |
| MW4-2-24 | 12/11/96 | µg/L | | 46.9 | 565 | | | | 3.4 | 5 | | | 8.3 | | | | 3.7 | 133 | |
| MW4-30-63 | 12/10/96 | µg/L | | 2.2 | 134 | | | | 7.1 | 2.6 | | | 5.9 | | | | | 223 | |
| MW6-2-27 | 12/10/96 | µg/L | | | 199 | | 0.6 | | 2.8 | 7 | | | 6.2 | | | | | 215 | |
| MW6-5-28 | 12/09/96 | µg/L | | | 83.1 | | | 3.5 | 5.8 | 5.9 | | | 3.3 | | | | 1.4 | 17.2 | |
| MW6-6-24 | 12/10/96 | µg/L | | | 204 | | 0.46 | 5.9 | 1.9 | 3 | | | 7 | | | | | 677 | |
| MW6-12-42 | 12/11/96 | µg/L | | | 96.3 | | 0.63 | | 5.6 | 4.6 | | | 6.6 | | | | | 128 | |
| MW6-20-37 | 12/11/96 | µg/L | | 3.4 | 114 | | | | 74.1 | 6 | | | 38.4 | | | | 2.2 | 122 | |
| MW6-29-73 | 12/10/96 | µg/L | | | 192 | | 0.57 | | 3.5 | 6.8 | | | 3.3 | | | | 2.7 | 101 | |
| MW7-4-26 | 12/09/96 | µg/L | | | 94.6 | 0.21 | 0.85 | 1.6 | 2.3 | 7.5 | | | 2.9 | | 2.8 | | 2.3 | 16.7 | |
| MW7-4-26D | 12/09/96 | µg/L | | | 182 | | | | 1.7 | 4.9 | | | 2.9 | | | | | 70.1 | |
| MW7-5-28 | 12/09/96 | µg/L | | 1.5 | 238 | 2.6 | 3 | 5 | 4 | 9.9 | | | 4.5 | | 2.4 | | 4.1 | 120 | |
| MW7-12-25 | 4/13/95 | µg/L | | | | | | 323 | | | | | | | | | | | |
| MW1-12-29 | 12/12/96 | µg/L | | | 48.2 | | 0.82 | 2.8 | | | 1 | | | 2.8 | | | | 21.5 | |
| MW1-15-29 | 12/12/96 | µg/L | | | 129 | | 1.1 | 4 | 3.2 | 5.3 | | | | | 2.2 | | 2 | 39.7 | |
| MW1-22-173 | 12/12/96 | µg/L | | | 94 | | 1 | 2.1 | 3.7 | 5.5 | | | 7.2 | | | | 2.4 | 25.7 | |
| MW1-23-47 | 12/18/96 | µg/L | | | 29.3 | | 0.42 | 4.3 | | 2.8 | | | 3.2 | | 4.1 | | | | |
| MW5-18-26 | 12/18/96 | µg/L | | 19.4 | 166 | | 0.99 | | | 2.7 | | | 6.5 | | 3.3 | | 2 | | |
| MW5-41-19 | 12/19/96 | µg/L | | | 16.1 | | 1.2 | 4.8 | 3.7 | 6.9 | 1 | 0.23 | 4.2 | | 3.3 | | 1.7 | | |
| MW1-24-23 | 12/12/96 | µg/L | | | 145 | | 0.92 | 6.8 | 2 | 4 | 0.8 | | | 5.2 | 2.9 | | 2.7 | 50 | |
| MW1-27-19 | 12/18/96 | µg/L | | | 152 | | 0.68 | 2.5 | 2.8 | 5.1 | 1.2 | | 3.8 | 5.3 | | | 4.4 | | |
| MW2-4-77 | 12/18/96 | µg/L | | | 54.3 | 0.63 | 1.7 | | 160 | | 1.2 | | 130 | | 2.2 | | | 200 | |
| MW3-2-27 | 12/18/96 | µg/L | | 20.2 | 214 | | | 4 | 1.8 | | 2.1 | | | | 4 | | | | |
| MW4-37-29 | 12/18/96 | µg/L | | | 28.4 | | 0.45 | 4.2 | | | | | | | | | | | |

| Well ID | Date Sampled | ACT 2 SMCL (µg/L) | Iron 300 | Manganese 50 |
|---|---|---|---|---|
| | | Units | | |
| MW6-2-27 | 4/12/95 | µg/L | | 4620 |
| MW6-4-29 | 4/12/95 | µg/L | 28000 | 3200 |
| MW6-8-28 | 4/12/95 | µg/L | | 64 |
| MW6 | 4/13/95 | µg/L | 2490 | 632 |
| MW5-1-26 | 4/13/95 | µg/L | | 951 |
| MW5-1-26D | 4/13/95 | µg/L | | 930 |
| MW5-2-24 | 4/13/95 | µg/L | 21000 | 20300 |
| MW7-12-25 | 4/13/95 | µg/L | | 87 |
| MW9-1-20 | 4/13/95 | µg/L | 1760 | 3300 |

usx-tab3.wk4

MSC = Medium-Specific Concentrations for Regulated Substances in Groundwater

Exceeds Act 2 MSC for Non-residential Used Aquifer

Exceeds Act 2 MSC for Non-residential Non-Use Aquifer

SCML = Secondary Maximum Contaminant Level in Groundwater

Exceeds Act 2 Secondary Maximum Contaminant Level (non-enforceable)

TABLE 3
SUMMARY OF GROUNDWATER QUALITY RESULTS
METALS
USX FAIRLESS WORKS

FAIRLESS HILLS, PA

New Jersey

Tyburn Rd.

295

Biles Creek

MW7-05-28
5.56

MW7-04-26
4.74

MW6-02-27
3.23

MW6-08-28
3.34

MW6-05-28
3.54

MW6-06-24
3.2

MW6-12-42
3.26

MW6-20-37
3.14

MW4-30-63
3.17

MW4-11-33
3.47

MW4-14-36
3.16

MW4-10-23
3.84

MW5-18-26
7.08

MW5-07-24
7.62

MW5-41-19
10.25

MW3-12-31
5.05

MW4-33-25
4.38

MW3-02-27
6.49

MW4-02-24
4.2

MW3-29-29
5.51

MW2-03-33
3.87

MW2-01-22
5.06

G.R.O.W.S. Landfill

MW1-02-31
3.98

MW1-28-74
4.92

MW1-23-47
3.35

MW1-15-29
3.40

MW1-26-27
4.52

MW1-12-29
3.98

Delaware River

New Jersey

N
W
E
S

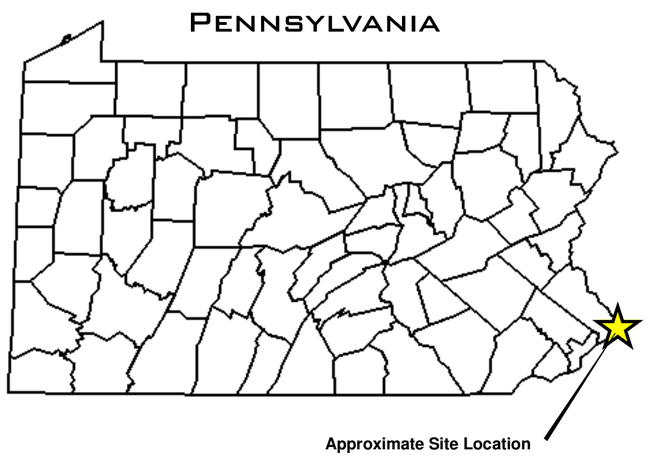


**Legend**

Monitoring Well Location

MW2-03-33
3.87
Monitoring Well Sample Location With Groundwater Elevation

Groundwater Elevation Contours (ft. amsl)

Consent Order Boundary

NOTES
1. Consent Order Boundary georeferenced from the U.S. Steel 1994 Current Conditions Report.
2. 2007 aerial photography provided by U.S. Steel, March 6, 2008.

**Figure 4 - Groundwater Contour Map**
**June 2009**
**U.S. Steel Fairless Works**
**Keystone Industrial Port Complex**
**Fairless Hills, Pennsylvania**

LANGAN
ENGINEERING & ENVIRONMENTAL SERVICES

0 700 1,400 Feet

SCALE: 1" = 700'
DATE: May 14, 2009
DRN. BY: MH
CKD. BY: JH
JOB#: 2634102

S:\Other\USSteelGIS_Database\ArcGIS\Working MXDs\2634102 - Sitewide Groundwater Strategy\MXD\October 2008 GW\Sitewide_GWContours_Oct2008_rev051409.mxd

**Table 5**
**Summary of Groundwater Analytical Results - October 2008**
**Comparison to Pennsylvania Non-Residential Non-Use Aquifer Groundwater MSCs**
**U.S. Steel - RCRA Groundwater Sampling**
**Fairless Hills, Pennsylvania**

| | CAS No | PADEP Non-Residentail Non-Use Aquifer GW MSC | Location ID | MW1-10-32 | | | | MW1-12-29 | | | | MW1-15-29 | | | | MW1-2-31 | | | | MW1-2-31 | | | | MW1-23-47 | | | | MW1-24-23 | | | |
|---|---|---|---|---|---|---|---|---|---|---|---|---|---|---|---|---|---|---|---|---|---|---|---|---|---|---|---|---|---|---|---|
| | | | Sample ID | MW1-10-32_10-08-N | | | | MW1-12-29_10-08-N | | | | MW1-15-29_10-08-N | | | | DUP-003_10-08-N | | | | MW1-2-31_10-08-N | | | | MW1-23-47_10-08-N | | | | MW1-24-23_10-08-N | | | |
| | | | Sample Date | 39737 | | | | 10/20/2008 | | | | 10/16/2008 | | | | 10/17/2008 | | | | 10/17/2008 | | | | 10/15/2008 | | | | 10/15/2008 | | | |
| | | | Lab Id | C8J180168006 | | | | C8J220361008 | | | | C8J180168007 | | | | C8J180168030 | | | | C8J180168026 | | | | C8J160299015 | | | | C8J160299016 | | | |
| ***RCRA APPENDIX IX VOLATILE ORGANIC COMPOUNDS (Method 8260)*** | | | | Result | DF | Q | RL | Result | DF | Q | RL | Result | DF | Q | RL | Result | DF | Q | RL | Result | DF | Q | RL | Result | DF | Q | RL | Result | DF | Q | RL |
| 1,1,1,2-TETRACHLOROETHANE | 630-20-6 | 7000 | ug/l | ND | 1 | | 1 | ND | 1 | | 1 | ND | 1 | | 1 | ND | 1 | | 1 | ND | 1 | | 1 | ND | 1 | | 1 | ND | 1 | | 1 |
| 1,1,1-TRICHLOROETHANE | 71-55-6 | 2000 | ug/l | ND | 1 | | 1 | ND | 1 | | 1 | ND | 1 | | 1 | ND | 1 | | 1 | ND | 1 | | 1 | ND | 1 | | 1 | ND | 1 | | 1 |
| 1,1,2,2-TETRACHLOROETHANE | 79-34-5 | 30 | ug/l | ND | 1 | | 1 | ND | 1 | | 1 | ND | 1 | | 1 | ND | 1 | | 1 | ND | 1 | | 1 | ND | 1 | | 1 | ND | 1 | | 1 |
| 1,1,2-TRICHLOROETHANE | 79-00-5 | 50 | ug/l | ND | 1 | | 1 | ND | 1 | | 1 | ND | 1 | | 1 | ND | 1 | | 1 | ND | 1 | | 1 | ND | 1 | | 1 | ND | 1 | | 1 |
| 1,1-DICHLOROETHANE | 75-34-3 | 1100 | ug/l | ND | 1 | | 1 | ND | 1 | | 1 | ND | 1 | | 1 | ND | 1 | | 1 | ND | 1 | | 1 | ND | 1 | | 1 | ND | 1 | | 1 |
| 1,1-DICHLOROETHYLENE | 75-35-4 | 70 | ug/l | ND | 1 | | 1 | ND | 1 | | 1 | ND | 1 | | 1 | ND | 1 | | 1 | ND | 1 | | 1 | ND | 1 | | 1 | ND | 1 | | 1 |
| 1,2,3-TRICHLOROPROPANE | 96-18-4 | 4000 | ug/l | ND | 1 | | 1 | ND | 1 | | 1 | ND | 1 | | 1 | ND | 1 | | 1 | ND | 1 | | 1 | ND | 1 | | 1 | ND | 1 | | 1 |
| 1,2-DIBROMO-3-CHLOROPROPANE (DBCP) | 96-12-8 | 20 | ug/l | ND | 1 | | 1 | ND | 1 | | 1 | ND | 1 | | 1 | ND | 1 | | 1 | ND | 1 | | 1 | ND | 1 | | 1 | ND | 1 | | 1 |
| 1,2-DIBROMOETHANE | 106-93-4 | 5 | ug/l | ND | 1 | | 1 | ND | 1 | | 1 | ND | 1 | | 1 | ND | 1 | | 1 | ND | 1 | | 1 | ND | 1 | | 1 | ND | 1 | | 1 |
| 1,2-DICHLOROETHANE | 107-06-2 | 50 | ug/l | ND | 1 | | 1 | ND | 1 | | 1 | ND | 1 | | 1 | ND | 1 | | 1 | ND | 1 | | 1 | ND | 1 | | 1 | ND | 1 | | 1 |
| 1,2-DICHLOROPROPANE | 78-87-5 | 50 | ug/l | ND | 1 | | 1 | ND | 1 | | 1 | ND | 1 | | 1 | ND | 1 | | 1 | ND | 1 | | 1 | ND | 1 | | 1 | ND | 1 | | 1 |
| 1,4-DIOXANE | 123-91-1 | 240 | ug/l | ND | 1 | | 200 | ND | 1 | | 200 | ND | 1 | | 200 | ND | 1 | | 200 | ND | 1 | | 200 | ND | 1 | | 200 | ND | 1 | | 200 |
| 2-BUTANONE (MEK) | 78-93-3 | 580000 | ug/l | ND | 1 | | 5 | ND | 1 | | 5 | ND | 1 | | 5 | 1.1 | 1 | J | 5 | ND | 1 | | 5 | ND | 1 | | 5 | 1.1 | 1 | J | 5 |
| 2-CHLOR-1,3-BUTADIENE | 126-99-8 | 4100 | ug/l | ND | 1 | | 1 | ND | 1 | | 1 | ND | 1 | | 1 | ND | 1 | | 1 | ND | 1 | | 1 | ND | 1 | | 1 | ND | 1 | | 1 |
| 2-METHYL-1-PROPANOL | 78-83-1 | 610000 | ug/l | ND | 1 | | 40 | ND | 1 | | 40 | ND | 1 | | 40 | ND | 1 | | 40 | ND | 1 | | 40 | ND | 1 | | 40 | ND | 1 | | 40 |
| 4-METHYL-2-PENTANONE (MIBK) | 108-10-1 | 41000 | ug/l | ND | 1 | | 5 | ND | 1 | | 5 | ND | 1 | | 5 | ND | 1 | | 5 | ND | 1 | | 5 | ND | 1 | | 5 | ND | 1 | | 5 |
| ACETONE | 67-64-1 | 100000 | ug/l | 3.2 | 1 | J | 5 | ND | 1 | | 5 | 3.1 | 1 | J | 5 | 4.5 | 1 | J | 5 | 5.7 | 1 | | 5 | ND | 1 | | 5 | 3.3 | 1 | J | 5 |
| ACETONITRILE | 75-05-8 | 3500 | ug/l | ND | 1 | | 20 | ND | 1 | | 20 | ND | 1 | | 20 | ND | 1 | | 20 | ND | 1 | | 20 | ND | 1 | | 20 | ND | 1 | | 20 |
| ACROLEIN | 107-02-8 | 1.2 | ug/l | ND | 1 | | ***20*** | ND | 1 | | ***20*** | ND | 1 | | ***20*** | ND | 1 | | ***20*** | ND | 1 | | ***20*** | ND | 1 | | ***20*** | ND | 1 | | ***20*** |
| ACRYLONITRILE | 107-13-1 | 270 | ug/l | ND | 1 | | 20 | ND | 1 | | 20 | ND | 1 | | 20 | ND | 1 | | 20 | ND | 1 | | 20 | ND | 1 | | 20 | ND | 1 | | 20 |
| ALLYLCHLORIDE | 107-05-1 | 580 | ug/l | ND | 1 | | 1 | ND | 1 | | 1 | ND | 1 | | 1 | ND | 1 | | 1 | ND | 1 | | 1 | ND | 1 | | 1 | ND | 1 | | 1 |
| BENZENE | 71-43-2 | 500 | ug/l | ND | 1 | | 1 | ND | 1 | | 1 | ND | 1 | | 1 | ND | 1 | | 1 | ND | 1 | | 1 | ND | 1 | | 1 | ND | 1 | | 1 |
| BROMODICHLOROMETHANE | 75-27-4 | 100 | ug/l | ND | 1 | | 1 | ND | 1 | | 1 | ND | 1 | | 1 | ND | 1 | | 1 | ND | 1 | | 1 | ND | 1 | | 1 | ND | 1 | | 1 |
| BROMOMETHANE | 74-83-9 | 1000 | ug/l | ND | 1 | | 1 | ND | 1 | | 1 | ND | 1 | | 1 | ND | 1 | | 1 | ND | 1 | | 1 | ND | 1 | | 1 | ND | 1 | | 1 |
| CARBON DISULFIDE | 75-15-0 | 4100 | ug/l | ND | 1 | | 1 | ND | 1 | | 1 | ND | 1 | | 1 | ND | 1 | | 1 | ND | 1 | | 1 | ND | 1 | | 1 | ND | 1 | | 1 |
| CARBON TETRACHLORIDE | 56-23-5 | 50 | ug/l | ND | 1 | | 1 | ND | 1 | | 1 | ND | 1 | | 1 | ND | 1 | | 1 | ND | 1 | | 1 | ND | 1 | | 1 | ND | 1 | | 1 |
| CFC-11 | 75-69-4 | 200000 | ug/l | ND | 1 | | 1 | ND | 1 | | 1 | ND | 1 | | 1 | ND | 1 | | 1 | ND | 1 | | 1 | ND | 1 | | 1 | ND | 1 | | 1 |
| CFC-12 | 75-71-8 | 100000 | ug/l | ND | 1 | | 1 | ND | 1 | | 1 | ND | 1 | | 1 | ND | 1 | | 1 | ND | 1 | | 1 | ND | 1 | | 1 | ND | 1 | | 1 |
| CHLOROBENZENE | 108-90-7 | 10000 | ug/l | ND | 1 | | 1 | ND | 1 | | 1 | ND | 1 | | 1 | ND | 1 | | 1 | ND | 1 | | 1 | ND | 1 | | 1 | ND | 1 | | 1 |
| CHLORODIBROMOMETHANE | 124-48-1 | 10000 | ug/l | ND | 1 | | 1 | ND | 1 | | 1 | ND | 1 | | 1 | ND | 1 | | 1 | ND | 1 | | 1 | ND | 1 | | 1 | ND | 1 | | 1 |
| CHLOROETHANE | 75-00-3 | 90000 | ug/l | ND | 1 | | 1 | ND | 1 | | 1 | ND | 1 | | 1 | ND | 1 | | 1 | ND | 1 | | 1 | ND | 1 | | 1 | ND | 1 | | 1 |
| CHLOROFORM | 67-66-3 | 1000 | ug/l | ND | 1 | | 1 | ND | 1 | | 1 | ND | 1 | | 1 | ND | 1 | | 1 | ND | 1 | | 1 | ND | 1 | | 1 | ND | 1 | | 1 |
| CHLOROMETHANE | 74-87-3 | 300 | ug/l | ND | 1 | | 1 | ND | 1 | | 1 | ND | 1 | | 1 | ND | 1 | | 1 | ND | 1 | | 1 | ND | 1 | | 1 | ND | 1 | | 1 |
| CIS-1,3-DICHLOROPROPENE | 10061-01-5 | NS | ug/l | ND | 1 | | 1 | ND | 1 | | 1 | ND | 1 | | 1 | ND | 1 | | 1 | ND | 1 | | 1 | ND | 1 | | 1 | ND | 1 | | 1 |
| DIBROMOMETHANE | 74-95-3 | 20000 | ug/l | ND | 1 | | 1 | ND | 1 | | 1 | ND | 1 | | 1 | ND | 1 | | 1 | ND | 1 | | 1 | ND | 1 | | 1 | ND | 1 | | 1 |
| DICHLOROMETHANE | 75-09-2 | 500 | ug/l | ND | 1 | | 1 | ND | 1 | | 1 | ND | 1 | | 1 | ND | 1 | | 1 | ND | 1 | | 1 | ND | 1 | | 1 | ND | 1 | | 1 |
| ETHYL METHACRYLATE | 97-63-2 | 1800 | ug/l | ND | 1 | | 1 | ND | 1 | | 1 | ND | 1 | | 1 | ND | 1 | | 1 | ND | 1 | | 1 | ND | 1 | | 1 | ND | 1 | | 1 |
| ETHYLBENZENE | 100-41-4 | 70000 | ug/l | ND | 1 | | 1 | ND | 1 | | 1 | ND | 1 | | 1 | ND | 1 | | 1 | ND | 1 | | 1 | ND | 1 | | 1 | ND | 1 | | 1 |
| IODOMETHANE | 74-88-4 | 5 | ug/l | ND | 1 | | 1 | ND | 1 | | 1 | ND | 1 | | 1 | 0.33 | 1 | J | 1 | 0.36 | 1 | J | 1 | ND | 1 | | 1 | ND | 1 | | 1 |
| METHYL METHACRYLATE | 80-62-6 | 410000 | ug/l | ND | 1 | | 1 | ND | 1 | | 1 | ND | 1 | | 1 | ND | 1 | | 1 | ND | 1 | | 1 | ND | 1 | | 1 | ND | 1 | | 1 |
| METHYL N-BUTYL KETONE | 591-78-6 | 5 | ug/l | ND | 1 | | 5 | ND | 1 | | 5 | ND | 1 | | 5 | ND | 1 | | 5 | ND | 1 | | 5 | ND | 1 | | 5 | ND | 1 | | 5 |
| METHYLACRYLONITRILE | 126-98-7 | 4.1 | ug/l | ND | 1 | | 1 | ND | 1 | | 1 | ND | 1 | | 1 | ND | 1 | | 1 | ND | 1 | | 1 | ND | 1 | | 1 | ND | 1 | | 1 |
| PENTACHLOROETHANE | 76-01-7 | 5 | ug/l | ND | 1.02 | | 2 | ND | 1.08 | | 2.2 | ND | 1.09 | | 2.2 | ND | 1.06 | | 2.1 | ND | 1.12 | | 2.2 | ND | 1.12 | | 2.2 | ND | 1.06 | | 2.1 |
| PROPIONITRILE | 107-12-0 | 5 | ug/l | ND | 1 | | 2 | ND | 1 | | 2 | ND | 1 | | 2 | ND | 1 | | 2 | ND | 1 | | 2 | ND | 1 | | 2 | ND | 1 | | 2 |
| STYRENE (MONOMER) | 100-42-5 | 10000 | ug/l | ND | 1 | | 1 | ND | 1 | | 1 | ND | 1 | | 1 | ND | 1 | | 1 | ND | 1 | | 1 | ND | 1 | | 1 | ND | 1 | | 1 |
| TETRACHLOROETHENE | 127-18-4 | 50 | ug/l | ND | 1 | | 1 | ND | 1 | | 1 | ND | 1 | | 1 | ND | 1 | | 1 | ND | 1 | | 1 | ND | 1 | | 1 | ND | 1 | | 1 |
| TOLUENE | 108-88-3 | 100000 | ug/l | ND | 1 | | 1 | ND | 1 | | 1 | ND | 1 | | 1 | ND | 1 | | 1 | ND | 1 | | 1 | ND | 1 | | 1 | ND | 1 | | 1 |
| TRANS-1,2-DICHLOROETHENE | 156-60-5 | 1000 | ug/l | ND | 1 | | 1 | ND | 1 | | 1 | ND | 1 | | 1 | ND | 1 | | 1 | ND | 1 | | 1 | ND | 1 | | 1 | ND | 1 | | 1 |
| TRANS-1,3-DICHLOROPROPENE | 10061-02-6 | NS | ug/l | ND | 1 | | 1 | ND | 1 | | 1 | ND | 1 | | 1 | ND | 1 | | 1 | ND | 1 | | 1 | ND | 1 | | 1 | ND | 1 | | 1 |
| TRANS-1,4-DICHLOROBUTENE | 110-57-6 | 5 | ug/l | ND | 1 | | 1 | ND | 1 | | 1 | ND | 1 | | 1 | ND | 1 | | 1 | ND | 1 | | 1 | ND | 1 | | 1 | ND | 1 | | 1 |
| TRIBROMOMETHANE | 75-25-2 | 10000 | ug/l | ND | 1 | | 1 | ND | 1 | | 1 | ND | 1 | | 1 | ND | 1 | | 1 | ND | 1 | | 1 | ND | 1 | | 1 | ND | 1 | | 1 |
| TRICHLOROETHYLENE | 79-01-6 | 50 | ug/l | ND | 1 | | 1 | ND | 1 | | 1 | ND | 1 | | 1 | ND | 1 | | 1 | ND | 1 | | 1 | ND | 1 | | 1 | ND | 1 | | 1 |
| VINYL ACETATE | 108-05-4 | 1200 | ug/l | ND | 1 | | 1 | ND | 1 | | 1 | ND | 1 | | 1 | ND | 1 | | 1 | ND | 1 | | 1 | ND | 1 | | 1 | ND | 1 | | 1 |
| VINYL CHLORIDE | 75-01-4 | 20 | ug/l | ND | 1 | | 1 | ND | 1 | | 1 | ND | 1 | | 1 | ND | 1 | | 1 | ND | 1 | | 1 | ND | 1 | | 1 | ND | 1 | | 1 |
| XYLENE (TOTAL) | 1330-20-7 | 180000 | ug/l | ND | 1 | | 3 | ND | 1 | | 3 | ND | 1 | | 3 | ND | 1 | | 3 | ND | 1 | | 3 | ND | 1 | | 3 | ND | 1 | | 3 |

**Table 5**
**Summary of Groundwater Analytical Results - October 2008**
**Comparison to Pennsylvania Non-Residential Non-Use Aquifer Groundwater MSCs**
**U.S. Steel - RCRA Groundwater Sampling**
**Fairless Hills, Pennsylvania**

| | CAS No | PADEP Non-Residentail Non-Use Aquifer GW MSC | Location ID | MW1-10-32 | | | | MW1-12-29 | | | | MW1-15-29 | | | | MW1-2-31 | | | | MW1-2-31 | | | | MW1-23-47 | | | | MW1-24-23 | | | |
|---|---|---|---|---|---|---|---|---|---|---|---|---|---|---|---|---|---|---|---|---|---|---|---|---|---|---|---|---|---|---|---|
| | | | Sample ID | MW1-10-32_10-08-N | | | | MW1-12-29_10-08-N | | | | MW1-15-29_10-08-N | | | | DUP-003_10-08-N | | | | MW1-2-31_10-08-N | | | | MW1-23-47_10-08-N | | | | MW1-24-23_10-08-N | | | |
| | | | Sample Date | 39737 | | | | 10/20/2008 | | | | 10/16/2008 | | | | 10/17/2008 | | | | 10/17/2008 | | | | 10/15/2008 | | | | 10/15/2008 | | | |
| | | | Lab Id | C8J180168006 | | | | C8J220361008 | | | | C8J180168007 | | | | C8J180168030 | | | | C8J180168026 | | | | C8J160299015 | | | | C8J160299016 | | | |
| ***RCRA APPENDIX IX SEMI-VOLATILE ORGANIC COMPOUNDS (Method 8270)*** | | | | Result | DF | Q | RL | Result | DF | Q | RL | Result | DF | Q | RL | Result | DF | Q | RL | Result | DF | Q | RL | Result | DF | Q | RL | Result | DF | Q | RL |
| 1,2,4,5-TETRACHLOROBENZENE | 95-94-3 | 580 | ug/l | ND | 1.02 | | 1 | ND | 1.08 | | 1.1 | ND | 1.09 | | 1.1 | ND | 1.06 | | 1.1 | ND | 1.12 | | 1.1 | ND | 1.12 | | 1.1 | ND | 1.06 | | 1.1 |
| 1,2,4-TRICHLOROBENZENE | 120-82-1 | 44000 | ug/l | ND | 1.02 | | 0.2 | ND | 1.08 | | 0.22 | ND | 1.09 | | 0.22 | ND | 1.06 | | 0.21 | ND | 1.12 | | 0.22 | ND | 1.12 | | 0.22 | ND | 1.06 | | 0.21 |
| 1,2-DICHLOROBENZENE | 95-50-1 | 60000 | ug/l | ND | 1.02 | | 0.2 | ND | 1.08 | | 0.22 | ND | 1.09 | | 0.22 | ND | 1.06 | | 0.21 | ND | 1.12 | | 0.22 | ND | 1.12 | | 0.22 | ND | 1.06 | | 0.21 |
| 1,3,5-TRINITROBENZENE | 99-35-4 | NS | ug/l | ND | 1.02 | | 1 | ND | 1.08 | | 1.1 | ND | 1.09 | | 1.1 | ND | 1.06 | | 1.1 | ND | 1.12 | | 1.1 | ND | 1.12 | | 1.1 | ND | 1.06 | | 1.1 |
| 1,4-DICHLOROBENZENE | 106-46-7 | 7500 | ug/l | ND | 1.02 | | 0.2 | ND | 1.08 | | 0.22 | ND | 1.09 | | 0.22 | ND | 1.06 | | 0.21 | ND | 1.12 | | 0.22 | ND | 1.12 | | 0.22 | ND | 1.06 | | 0.21 |
| 1,4-NAPHTHOQUINONE | 130-15-4 | 5 | ug/l | ND | 1.02 | | 1 | ND | 1.08 | | 1.1 | ND | 1.09 | | 1.1 | ND | 1.06 | | 1.1 | ND | 1.12 | | 1.1 | ND | 1.12 | | 1.1 | ND | 1.06 | | 1.1 |
| 1-NAPHTHYLAMINE | 134-32-7 | 1400 | ug/l | ND | 1.02 | | 1 | ND | 1.08 | | 1.1 | ND | 1.09 | | 1.1 | ND | 1.06 | | 1.1 | ND | 1.12 | | 1.1 | ND | 1.12 | | 1.1 | ND | 1.06 | | 1.1 |
| 2,4,5-TRICHLOROPHENOL | 95-95-4 | 1000000 | ug/l | ND | 1.02 | | 1 | ND | 1.08 | | 1.1 | ND | 1.09 | | 1.1 | ND | 1.06 | | 1.1 | ND | 1.12 | | 1.1 | ND | 1.12 | | 1.1 | ND | 1.06 | | 1.1 |
| 2,4,6-TRICHLOROPHENOL | 88-06-2 | 31000 | ug/l | ND | 1.02 | | 1 | ND | 1.08 | | 1.1 | ND | 1.09 | | 1.1 | ND | 1.06 | | 1.1 | ND | 1.12 | | 1.1 | ND | 1.12 | | 1.1 | ND | 1.06 | | 1.1 |
| 2,4-DICHLOROPHENOL | 120-83-2 | 20000 | ug/l | ND | 1.02 | | 0.2 | ND | 1.08 | | 0.22 | ND | 1.09 | | 0.22 | ND | 1.06 | | 0.21 | ND | 1.12 | | 0.22 | ND | 1.12 | | 0.22 | ND | 1.06 | | 0.21 |
| 2,4-DIMETHYLPHENOL | 105-67-9 | 2000000 | ug/l | ND | 1.02 | | 1 | ND | 1.08 | | 1.1 | ND | 1.09 | | 1.1 | ND | 1.06 | | 1.1 | ND | 1.12 | | 1.1 | ND | 1.12 | | 1.1 | ND | 1.06 | | 1.1 |
| 2,4-DINITROPHENOL | 51-28-5 | 410 | ug/l | ND | 1.02 | | 5.1 | ND | 1.08 | | 5.4 | ND | 1.09 | | 5.4 | ND | 1.06 | | 5.3 | ND | 1.12 | | 5.6 | ND | 1.12 | | 5.6 | ND | 1.06 | | 5.3 |
| 2,4-DINITROTOLUENE | 121-14-2 | 8400 | ug/l | ND | 1.02 | | 1 | ND | 1.08 | | 1.1 | ND | 1.09 | | 1.1 | ND | 1.06 | | 1.1 | ND | 1.12 | | 1.1 | ND | 1.12 | | 1.1 | ND | 1.06 | | 1.1 |
| 2,6-DICHLOROPHENOL | 87-65-0 | NS | ug/l | ND | 1.02 | | 0.2 | ND | 1.08 | | 0.22 | ND | 1.09 | | 0.22 | ND | 1.06 | | 0.21 | ND | 1.12 | | 0.22 | ND | 1.12 | | 0.22 | ND | 1.06 | | 0.21 |
| 2,6-DINITROTOLUENE | 606-20-2 | 100000 | ug/l | ND | 1.02 | | 1 | ND | 1.08 | | 1.1 | ND | 1.09 | | 1.1 | ND | 1.06 | | 1.1 | ND | 1.12 | | 1.1 | ND | 1.12 | | 1.1 | ND | 1.06 | | 1.1 |
| 2-ACETYLAMINOFLUORENE | 53-96-3 | 680 | ug/l | ND | 1.02 | | 1 | ND | 1.08 | | 1.1 | ND | 1.09 | | 1.1 | ND | 1.06 | | 1.1 | ND | 1.12 | | 1.1 | ND | 1.12 | | 1.1 | ND | 1.06 | | 1.1 |
| 2-CHLORONAPHTHALENE | 91-58-7 | 8200 | ug/l | ND | 1.02 | | 0.2 | ND | 1.08 | | 0.22 | ND | 1.09 | | 0.22 | ND | 1.06 | | 0.21 | ND | 1.12 | | 0.22 | ND | 1.12 | | 0.22 | ND | 1.06 | | 0.21 |
| 2-CHLOROPHENOL | 95-57-8 | 40 | ug/l | ND | 1.02 | | 1 | ND | 1.08 | | 1.1 | ND | 1.09 | | 1.1 | ND | 1.06 | | 1.1 | ND | 1.12 | | 1.1 | ND | 1.12 | | 1.1 | ND | 1.06 | | 1.1 |
| 2-METHYL PYRIDINE (2-PICOLINE) | 109-06-8 | 5 | ug/l | ND | 1.02 | | 1 | ND | 1.08 | | 1.1 | ND | 1.09 | | 1.1 | ND | 1.06 | | 1.1 | ND | 1.12 | | 1.1 | ND | 1.12 | | 1.1 | ND | 1.06 | | 1.1 |
| 2-METHYLNAPHTHALENE | 91-57-6 | 2000 | ug/l | ND | 1.02 | | 0.2 | ND | 1.08 | | 0.22 | ND | 1.09 | | 0.22 | ND | 1.06 | | 0.21 | ND | 1.12 | | 0.22 | ND | 1.12 | | 0.22 | ND | 1.06 | | 0.21 |
| 2-METHYLPHENOL | 95-48-7 | 510000 | ug/l | ND | 1.02 | | 1 | ND | 1.08 | | 1.1 | ND | 1.09 | | 1.1 | ND | 1.06 | | 1.1 | ND | 1.12 | | 1.1 | ND | 1.12 | | 1.1 | ND | 1.06 | | 1.1 |
| 2-NAPHTHALENAMINE (2-NAPHTHYLAMINE) | 91-59-8 | 1400 | ug/l | ND | 1.02 | | 1 | ND | 1.08 | | 1.1 | ND | 1.09 | | 1.1 | ND | 1.06 | | 1.1 | ND | 1.12 | | 1.1 | ND | 1.12 | | 1.1 | ND | 1.06 | | 1.1 |
| 2-NITROANILINE | 88-74-4 | 5.8 | ug/l | 0.12 | 1.02 | J | 5.1 | ND | 1.08 | | 5.4 | 0.055 | 1.09 | J | 5.4 | ND | 1.06 | | 5.3 | ND | 1.12 | | 5.6 | ND | 1.12 | | 5.6 | ND | 1.06 | | 5.3 |
| 2-NITROPHENOL | 88-75-5 | 820000 | ug/l | ND | 1.02 | | 1 | ND | 1.08 | | 1.1 | ND | 1.09 | | 1.1 | ND | 1.06 | | 1.1 | ND | 1.12 | | 1.1 | ND | 1.12 | | 1.1 | ND | 1.06 | | 1.1 |
| 3,3'-DICHLOROBENZIDINE | 91-94-1 | 3100 | ug/l | ND | 1.02 | | 1 | ND | 1.08 | | 1.1 | ND | 1.09 | | 1.1 | ND | 1.06 | | 1.1 | ND | 1.12 | | 1.1 | ND | 1.12 | | 1.1 | ND | 1.06 | | 1.1 |
| 3,3'-DIMETHYLBENZIDINE | 119-93-7 | 280 | ug/l | ND | 1.02 | | 10 | ND | 1.08 | | 11 | ND | 1.09 | | 11 | ND | 1.06 | | 11 | ND | 1.12 | | 11 | ND | 1.12 | | 11 | ND | 1.06 | | 11 |
| 3,5,5-TRIMETHYL-2-CYCLOHEXENE-1-ONE | 78-59-1 | 100000 | ug/l | ND | 1.02 | | 1 | ND | 1.08 | | 1.1 | ND | 1.09 | | 1.1 | ND | 1.06 | | 1.1 | ND | 1.12 | | 1.1 | ND | 1.12 | | 1.1 | ND | 1.06 | | 1.1 |
| 3-METHYLCHLORANTHRENE | 56-49-5 | NS | ug/l | ND | 1.02 | | 1 | ND | 1.08 | | 1.1 | ND | 1.09 | | 1.1 | ND | 1.06 | | 1.1 | ND | 1.12 | | 1.1 | ND | 1.12 | | 1.1 | ND | 1.06 | | 1.1 |
| 3-Methylphenol & 4-Methylphenol | 65794-96-9 | NS | ug/l | 0.098 | 1.02 | J | 1 | ND | 1.08 | | 1.1 | ND | 1.09 | | 1.1 | ND | 1.06 | | 1.1 | ND | 1.12 | | 1.1 | ND | 1.12 | | 1.1 | ND | 1.06 | | 1.1 |
| 3-NITROANILINE | 99-09-2 | 5.8 | ug/l | 0.057 | 1.02 | J | 5.1 | ND | 1.08 | | 5.4 | 0.061 | 1.09 | J | 5.4 | ND | 1.06 | | 5.3 | ND | 1.12 | | 5.6 | ND | 1.12 | | 5.6 | ND | 1.06 | | 5.3 |
| 4,6-DINITRO-2-METHYLPHENOL | 534-52-1 | 5 | ug/l | ND | 1.02 | | ***5.1*** | ND | 1.08 | | ***5.4*** | ND | 1.09 | | ***5.4*** | ND | 1.06 | | ***5.3*** | ND | 1.12 | | ***5.6*** | ND | 1.12 | | ***5.6*** | ND | 1.06 | | ***5.3*** |
| 4-AMINOBIPHENYL | 92-67-1 | 120 | ug/l | ND | 1.02 | | 1 | ND | 1.08 | | 1.1 | ND | 1.09 | | 1.1 | ND | 1.06 | | 1.1 | ND | 1.12 | | 1.1 | ND | 1.12 | | 1.1 | ND | 1.06 | | 1.1 |
| 4-BROMOPHENYL PHENYL ETHER | 101-55-3 | 5 | ug/l | ND | 1.02 | | 1 | ND | 1.08 | | 1.1 | ND | 1.09 | | 1.1 | ND | 1.06 | | 1.1 | ND | 1.12 | | 1.1 | 0.11 | 1.12 | J | 1.1 | ND | 1.06 | | 1.1 |
| 4-CHLORO-3-METHYLPHENOL | 59-50-7 | 510 | ug/l | ND | 1.02 | | 1 | ND | 1.08 | | 1.1 | ND | 1.09 | | 1.1 | ND | 1.06 | | 1.1 | ND | 1.12 | | 1.1 | ND | 1.12 | | 1.1 | ND | 1.06 | | 1.1 |
| 4-CHLOROPHENYL PHENYL ETHER | 7005-72-3 | 5 | ug/l | ND | 1.02 | | 1 | ND | 1.08 | | 1.1 | ND | 1.09 | | 1.1 | ND | 1.06 | | 1.1 | ND | 1.12 | | 1.1 | ND | 1.12 | | 1.1 | ND | 1.06 | | 1.1 |
| 4-DIMETHYLAMINOAZOBENZENE | 60-11-7 | 570 | ug/l | ND | 1.02 | | 1 | ND | 1.08 | | 1.1 | ND | 1.09 | | 1.1 | ND | 1.06 | | 1.1 | ND | 1.12 | | 1.1 | ND | 1.12 | | 1.1 | ND | 1.06 | | 1.1 |
| 4-NITROPHENOL | 100-02-7 | 60000 | ug/l | 0.71 | 1.02 | J | 5.1 | ND | 1.08 | | 5.4 | 0.67 | 1.09 | J | 5.4 | ND | 1.06 | | 5.3 | ND | 1.12 | | 5.6 | ND | 1.12 | | 5.6 | ND | 1.06 | | 5.3 |
| 4-NITROQUINOLINE-N-OXIDE | 56-57-5 | 5 | ug/l | ND | 1.02 | | ***10*** | ND | 1.08 | | ***11*** | ND | 1.09 | | ***11*** | ND | 1.06 | | ***11*** | ND | 1.12 | | ***11*** | ND | 1.12 | | ***11*** | ND | 1.06 | | ***11*** |
| 5-NITRO-O-TOLUIDINE | 99-55-8 | NS | ug/l | ND | 1.02 | | 10 | ND | 1.08 | | 11 | ND | 1.09 | | 11 | ND | 1.06 | | 11 | ND | 1.12 | | 11 | ND | 1.12 | | 11 | ND | 1.06 | | 11 |
| 7,12-DIMETHYLBENZ(A)ANTHRACENE | 57-97-6 | NS | ug/l | ND | 1.02 | | 1 | ND | 1.08 | | 1.1 | ND | 1.09 | | 1.1 | ND | 1.06 | | 1.1 | ND | 1.12 | | 1.1 | ND | 1.12 | | 1.1 | ND | 1.06 | | 1.1 |
| a,a-Dimethylphenethylamine | 122-09-8 | 5 | ug/l | ND | 1.02 | | 1 | ND | 1.08 | | 1.1 | ND | 1.09 | | 1.1 | ND | 1.06 | | 1.1 | ND | 1.12 | | 1.1 | ND | 1.12 | | 1.1 | ND | 1.06 | | 1.1 |
| ACENAPHTHENE | 83-32-9 | 3800 | ug/l | ND | 1.02 | | 0.2 | ND | 1.08 | | 0.22 | ND | 1.09 | | 0.22 | ND | 1.06 | | 0.21 | ND | 1.12 | | 0.22 | ND | 1.12 | | 0.22 | ND | 1.06 | | 0.21 |
| ACENAPHTHYLENE | 208-96-8 | 16000 | ug/l | ND | 1.02 | | 0.2 | ND | 1.08 | | 0.22 | ND | 1.09 | | 0.22 | ND | 1.06 | | 0.21 | ND | 1.12 | | 0.22 | ND | 1.12 | | 0.22 | ND | 1.06 | | 0.21 |
| ACETOPHENONE | 98-86-2 | 10000 | ug/l | ND | 1.02 | | 1 | ND | 1.08 | | 1.1 | ND | 1.09 | | 1.1 | ND | 1.06 | | 1.1 | ND | 1.12 | | 1.1 | ND | 1.12 | | 1.1 | ND | 1.06 | | 1.1 |
| ANILINE | 62-53-3 | 5.8 | ug/l | ND | 1.02 | | 1 | ND | 1.08 | | 1.1 | ND | 1.09 | | 1.1 | ND | 1.06 | | 1.1 | ND | 1.12 | | 1.1 | ND | 1.12 | | 1.1 | ND | 1.06 | | 1.1 |
| ANTHRACENE | 120-12-7 | 66 | ug/l | 0.076 | 1.02 | J | 0.2 | 0.37 | 1.08 | | 0.22 | 0.065 | 1.09 | J | 0.22 | ND | 1.06 | | 0.21 | ND | 1.12 | | 0.22 | 0.86 | 1.12 | | 0.22 | 0.076 | 1.06 | J | 0.21 |
| ARAMITE | 140-57-8 | NS | ug/l | ND | 1.02 | | 1 | ND | 1.08 | | 1.1 | ND | 1.09 | | 1.1 | ND | 1.06 | | 1.1 | ND | 1.12 | | 1.1 | ND | 1.12 | | 1.1 | ND | 1.06 | | 1.1 |
| BENZO(A)ANTHRACENE | 56-55-3 | 11 | ug/l | ND | 1.02 | | 0.2 | ND | 1.08 | | 0.22 | ND | 1.09 | | 0.22 | ND | 1.06 | | 0.21 | 0.093 | 1.12 | J | 0.22 | 3.4 | 1.12 | | 0.22 | ND | 1.06 | | 0.21 |
| BENZO(A)PYRENE | 50-32-8 | 3.8 | ug/l | ND | 1.02 | | 0.2 | ND | 1.08 | | 0.22 | 0.55 | 1.09 | | 0.22 | ND | 1.06 | | 0.21 | ND | 1.12 | | 0.22 | 2.3 | 1.12 | | 0.22 | ND | 1.06 | | 0.21 |
| BENZO(B)FLUORANTHENE | 205-99-2 | 1.2 | ug/l | 0.63 | 1.02 | | 0.2 | ND | 1.08 | | 0.22 | 0.67 | 1.09 | | 0.22 | ND | 1.06 | | 0.21 | 0.71 | 1.12 | | 0.22 | **2.9** | 1.12 | | 0.22 | ND | 1.06 | | 0.21 |
| BENZO(GHI)PERYLENE | 191-24-2 | 0.26 | ug/l | ND | 1.02 | | 0.2 | ND | 1.08 | | 0.22 | **0.61** | 1.09 | | 0.22 | ND | 1.06 | | 0.21 | ND | 1.12 | | 0.22 | **3.8** | 1.12 | | 0.22 | ND | 1.06 | | 0.21 |
| BENZO(K)FLUORANTHENE | 207-08-9 | 0.55 | ug/l | ND | 1.02 | | 0.2 | ND | 1.08 | | 0.22 | **0.74** | 1.09 | | 0.22 | ND | 1.06 | | 0.21 | **0.76** | 1.12 | | 0.22 | **3.5** | 1.12 | | 0.22 | ND | 1.06 | | 0.21 |
| BENZYL ALCOHOL | 100-51-6 | 31000 | ug/l | ND | 1.02 | | 1 | ND | 1.08 | | 1.1 | ND | 1.09 | | 1.1 | ND | 1.06 | | 1.1 | ND | 1.12 | | 1.1 | ND | 1.12 | | 1.1 | ND | 1.06 | | 1.1 |
| BENZYL BUTYL PHTHALATE | 85-68-7 | 2700 | ug/l | 0.39 | 1.02 | J | 1 | 0.15 | 1.08 | JB | 1.1 | 0.4 | 1.09 | J | 1.1 | 0.29 | 1.06 | J | 1.1 | 0.89 | 1.12 | J | 1.1 | 1.9 | 1.12 | | 1.1 | 0.37 | 1.06 | J | 1.1 |
| BIS(2-CHLORO-1-METHYLETHYL) ETHER | 108-60-1 | 30000 | ug/l | ND | 1.02 | | 0.2 | ND | 1.08 | | 0.22 | ND | 1.09 | | 0.22 | ND | 1.06 | | 0.21 | ND | 1.12 | | 0.22 | ND | 1.12 | | 0.22 | ND | 1.06 | | 0.21 |
| BIS(2-CHLOROETHOXY)METHANE | 111-91-1 | 5 | ug/l | ND | 1.02 | | 1 | ND | 1.08 | | 1.1 | ND | 1.09 | | 1.1 | ND | 1.06 | | 1.1 | ND | 1.12 | | 1.1 | ND | 1.12 | | 1.1 | ND | 1.06 | | 1.1 |
| BIS(2-CHLOROETHYL) ETHER | 111-44-4 | 55 | ug/l | ND | 1.02 | | 0.2 | ND | 1.08 | | 0.22 | ND | 1.09 | | 0.22 | ND | 1.06 | | 0.21 | ND | 1.12 | | 0.22 | ND | 1.12 | | 0.22 | ND | 1.06 | | 0.21 |
| BIS(2-ETHYLHEXYL)PHTHALATE | 117-81-7 | 290 | ug/l | 0.39 | 1.02 | J | 1 | ND | 1.08 | | 1.1 | ND | 1.09 | | 1.1 | 1.4 | 1.06 | | 1.1 | 1.9 | 1.12 | | 1.1 | 4 | 1.12 | | 1.1 | ND | 1.06 | | 1.1 |
| CHLORDECONE (KEPONE) | 143-50-0 | 160 | ug/l | ND | 1.02 | | 4.1 | ND | 1.08 | | 4.3 | ND | 1.09 | | 4.4 | ND | 1.06 | | 4.2 | ND | 1.12 | | 4.5 | ND | 1.12 | | 4.5 | ND | 1.06 | | 4.2 |

**Table 5**
**Summary of Groundwater Analytical Results - October 2008**
**Comparison to Pennsylvania Non-Residential Non-Use Aquifer Groundwater MSCs**
**U.S. Steel - RCRA Groundwater Sampling**
**Fairless Hills, Pennsylvania**

| | CAS No | PADEP Non-Residentail Non-Use Aquifer GW MSC | Location ID | MW1-10-32 | | | | MW1-12-29 | | | | MW1-15-29 | | | | MW1-2-31 | | | | MW1-2-31 | | | | MW1-23-47 | | | | MW1-24-23 | | | |
|---|---|---|---|---|---|---|---|---|---|---|---|---|---|---|---|---|---|---|---|---|---|---|---|---|---|---|---|---|---|---|---|
| | | | Sample ID | MW1-10-32_10-08-N | | | | MW1-12-29_10-08-N | | | | MW1-15-29_10-08-N | | | | DUP-003_10-08-N | | | | MW1-2-31_10-08-N | | | | MW1-23-47_10-08-N | | | | MW1-24-23_10-08-N | | | |
| | | | Sample Date | 39737 | | | | 10/20/2008 | | | | 10/16/2008 | | | | 10/17/2008 | | | | 10/17/2008 | | | | 10/15/2008 | | | | 10/15/2008 | | | |
| | | | Lab Id | C8J180168006 | | | | C8J220361008 | | | | C8J180168007 | | | | C8J180168030 | | | | C8J180168026 | | | | C8J160299015 | | | | C8J160299016 | | | |
| ***RCRA APPENDIX IX SEMI-VOLATILE ORGANIC COMPOUNDS (Method 8270)*** | | | | Result | DF | Q | RL | Result | DF | Q | RL | Result | DF | Q | RL | Result | DF | Q | RL | Result | DF | Q | RL | Result | DF | Q | RL | Result | DF | Q | RL |
| CHLOROBENZILATE | 510-15-6 | 9600 | ug/l | ND | 1.02 | | 1 | ND | 1.08 | | 1.1 | ND | 1.09 | | 1.1 | ND | 1.06 | | 1.1 | ND | 1.12 | | 1.1 | ND | 1.12 | | 1.1 | ND | 1.06 | | 1.1 |
| CHLOROPHENOLS | 58-90-2 | 61000 | ug/l | ND | 1.02 | | 1 | ND | 1.08 | | 1.1 | ND | 1.09 | | 1.1 | ND | 1.06 | | 1.1 | ND | 1.12 | | 1.1 | ND | 1.12 | | 1.1 | ND | 1.06 | | 1.1 |
| CHRYSENE | 218-01-9 | 1.9 | ug/l | ND | 1.02 | | 0.2 | ND | 1.08 | | 0.22 | 0.11 | 1.09 | J | 0.22 | ND | 1.06 | | 0.21 | 0.14 | 1.12 | J | 0.22 | **3.8** | 1.12 | | 0.22 | ND | 1.06 | | 0.21 |
| CYGON | 60-51-5 | 20000 | ug/l | ND | 1.02 | | 1 | ND | 1.08 | | 1.1 | ND | 1.09 | | 1.1 | ND | 1.06 | | 1.1 | ND | 1.12 | | 1.1 | ND | 1.12 | | 1.1 | ND | 1.06 | | 1.1 |
| DIALLATE | 2303-16-4 | 1000 | ug/l | ND | 1.02 | | 1 | ND | 1.08 | | 1.1 | ND | 1.09 | | 1.1 | ND | 1.06 | | 1.1 | ND | 1.12 | | 1.1 | ND | 1.12 | | 1.1 | ND | 1.06 | | 1.1 |
| DIBENZO(A,H)ANTHRACENE | 53-70-3 | 0.6 | ug/l | ND | 1.02 | | 0.2 | ND | 1.08 | | 0.22 | **0.98** | 1.09 | | 0.22 | ND | 1.06 | | 0.21 | ND | 1.12 | | 0.22 | **3.7** | 1.12 | | 0.22 | ND | 1.06 | | 0.21 |
| DIBENZOFURAN | 132-64-9 | 5 | ug/l | 0.056 | 1.02 | J | 1 | ND | 1.08 | | 1.1 | 0.064 | 1.09 | J | 1.1 | ND | 1.06 | | 1.1 | ND | 1.12 | | 1.1 | ND | 1.12 | | 1.1 | ND | 1.06 | | 1.1 |
| DIETHYL PHTHALATE | 84-66-2 | 1100000 | ug/l | ND | 1.02 | | 1 | ND | 1.08 | | 1.1 | ND | 1.09 | | 1.1 | ND | 1.06 | | 1.1 | ND | 1.12 | | 1.1 | ND | 1.12 | | 1.1 | ND | 1.06 | | 1.1 |
| DIMETHYL PHTHALATE | 131-11-3 | 5 | ug/l | ND | 1.02 | | 1 | ND | 1.08 | | 1.1 | ND | 1.09 | | 1.1 | ND | 1.06 | | 1.1 | ND | 1.12 | | 1.1 | ND | 1.12 | | 1.1 | ND | 1.06 | | 1.1 |
| DI-N-BUTYL PHTHALATE | 84-74-2 | 400000 | ug/l | 0.21 | 1.02 | J | 1 | 0.32 | 1.08 | JB | 1.1 | 0.21 | 1.09 | J | 1.1 | 0.082 | 1.06 | J | 1.1 | 0.2 | 1.12 | J | 1.1 | 0.87 | 1.12 | J | 1.1 | 0.073 | 1.06 | J | 1.1 |
| DINITROBUTYL PHENOL | 88-85-7 | 700 | ug/l | ND | 1.02 | | 1 | ND | 1.08 | | 1.1 | ND | 1.09 | | 1.1 | ND | 1.06 | | 1.1 | ND | 1.12 | | 1.1 | ND | 1.12 | | 1.1 | ND | 1.06 | | 1.1 |
| DI-N-OCTYL PHTHALATE | 117-84-0 | 3000 | ug/l | 0.45 | 1.02 | J | 1 | ND | 1.08 | | 1.1 | 0.47 | 1.09 | J | 1.1 | ND | 1.06 | | 1.1 | 0.54 | 1.12 | J | 1.1 | 3.6 | 1.12 | | 1.1 | 0.53 | 1.06 | J | 1.1 |
| DISULFOTON | 298-04-4 | 30 | ug/l | ND | 1.02 | | 1 | ND | 1.08 | | 1.1 | ND | 1.09 | | 1.1 | ND | 1.06 | | 1.1 | ND | 1.12 | | 1.1 | ND | 1.12 | | 1.1 | ND | 1.06 | | 1.1 |
| ETHYL METHANESULFONATE | 62-50-0 | 5 | ug/l | ND | 1.02 | | 1 | ND | 1.08 | | 1.1 | ND | 1.09 | | 1.1 | ND | 1.06 | | 1.1 | ND | 1.12 | | 1.1 | ND | 1.12 | | 1.1 | ND | 1.06 | | 1.1 |
| ETHYL PARATHION (PARATHION) | 56-38-2 | 610 | ug/l | ND | 1.02 | | 1 | ND | 1.08 | | 1.1 | ND | 1.09 | | 1.1 | ND | 1.06 | | 1.1 | ND | 1.12 | | 1.1 | ND | 1.12 | | 1.1 | ND | 1.06 | | 1.1 |
| FAMPHUR | 52-85-7 | 5 | ug/l | ND | 1.02 | | ***10*** | ND | 1.08 | | ***11*** | ND | 1.09 | | ***11*** | ND | 1.06 | | ***11*** | ND | 1.12 | | ***11*** | ND | 1.12 | | ***11*** | ND | 1.06 | | ***11*** |
| FLUORANTHENE | 206-44-0 | 260 | ug/l | 0.42 | 1.02 | | 0.2 | ND | 1.08 | | 0.22 | 0.49 | 1.09 | | 0.22 | 0.42 | 1.06 | | 0.21 | 0.47 | 1.12 | | 0.22 | 2.1 | 1.12 | | 0.22 | ND | 1.06 | | 0.21 |
| FLUORENE | 86-73-7 | 1900 | ug/l | ND | 1.02 | | 0.2 | 0.41 | 1.08 | | 0.22 | ND | 1.09 | | 0.22 | ND | 1.06 | | 0.21 | ND | 1.12 | | 0.22 | 0.081 | 1.12 | J | 0.22 | ND | 1.06 | | 0.21 |
| HEXACHLORO-1,3-BUTADIENE | 87-68-3 | 1000 | ug/l | ND | 1.02 | | 0.2 | ND | 1.08 | | 0.22 | ND | 1.09 | | 0.22 | ND | 1.06 | | 0.21 | ND | 1.12 | | 0.22 | ND | 1.12 | | 0.22 | ND | 1.06 | | 0.21 |
| HEXACHLOROBENZENE | 118-74-1 | 6 | ug/l | ND | 1.02 | | 0.2 | ND | 1.08 | | 0.22 | ND | 1.09 | | 0.22 | ND | 1.06 | | 0.21 | ND | 1.12 | | 0.22 | 1.3 | 1.12 | | 0.22 | ND | 1.06 | | 0.21 |
| HEXACHLOROCYCLOPENTADIENE | 77-47-4 | 1800 | ug/l | ND | 1.02 | | 1 | ND | 1.08 | | 1.1 | ND | 1.09 | | 1.1 | ND | 1.06 | | 1.1 | ND | 1.12 | | 1.1 | ND | 1.12 | | 1.1 | ND | 1.06 | | 1.1 |
| HEXACHLOROETHANE | 67-72-1 | 100 | ug/l | ND | 1.02 | | 1 | ND | 1.08 | | 1.1 | ND | 1.09 | | 1.1 | ND | 1.06 | | 1.1 | ND | 1.12 | | 1.1 | ND | 1.12 | | 1.1 | ND | 1.06 | | 1.1 |
| HEXACHLOROPHENE (HCP) | 70-30-4 | NS | ug/l | ND | - | | 0 | ND | - | | 0 | ND | - | | 0 | ND | - | | 0 | ND | - | | 0 | ND | - | | 0 | ND | - | | 0 |
| HEXACHLOROPROPENE | 1888-71-7 | 5 | ug/l | ND | 1.02 | | 1 | ND | 1.08 | | 1.1 | ND | 1.09 | | 1.1 | ND | 1.06 | | 1.1 | ND | 1.12 | | 1.1 | ND | 1.12 | | 1.1 | ND | 1.06 | | 1.1 |
| INDENO(1,2,3-CD)PYRENE | 193-39-5 | 62 | ug/l | ND | 1.02 | | 0.2 | ND | 1.08 | | 0.22 | 0.93 | 1.09 | | 0.22 | ND | 1.06 | | 0.21 | 0.96 | 1.12 | | 0.22 | 3.4 | 1.12 | | 0.22 | ND | 1.06 | | 0.21 |
| ISODRIN | 465-73-6 | 5 | ug/l | ND | 1.02 | | 1 | ND | 1.08 | | 1.1 | ND | 1.09 | | 1.1 | ND | 1.06 | | 1.1 | ND | 1.12 | | 1.1 | ND | 1.12 | | 1.1 | ND | 1.06 | | 1.1 |
| ISOSAFROLE | 120-58-1 | 5 | ug/l | ND | 1.02 | | 1 | ND | 1.08 | | 1.1 | ND | 1.09 | | 1.1 | ND | 1.06 | | 1.1 | ND | 1.12 | | 1.1 | ND | 1.12 | | 1.1 | ND | 1.06 | | 1.1 |
| M-DICHLOROBENZENE | 541-73-1 | 60000 | ug/l | ND | 1.02 | | 0.2 | ND | 1.08 | | 0.22 | ND | 1.09 | | 0.22 | ND | 1.06 | | 0.21 | ND | 1.12 | | 0.22 | ND | 1.12 | | 0.22 | ND | 1.06 | | 0.21 |
| M-DINITROBENZENE | 99-65-0 | 1000 | ug/l | ND | 1.02 | | 1 | ND | 1.08 | | 1.1 | ND | 1.09 | | 1.1 | ND | 1.06 | | 1.1 | ND | 1.12 | | 1.1 | ND | 1.12 | | 1.1 | ND | 1.06 | | 1.1 |
| METHANAMINE, N-METHYL-N-NITROSO | 62-75-9 | 0.13 | ug/l | ND | 1.02 | | ***1*** | ND | 1.08 | | ***1.1*** | ND | 1.09 | | ***1.1*** | ND | 1.06 | | ***1.1*** | ND | 1.12 | | ***1.1*** | ND | 1.12 | | ***1.1*** | ND | 1.06 | | ***1.1*** |
| METHAPYRILENE | 91-80-5 | NS | ug/l | ND | 1.02 | | 1 | ND | 1.08 | | 1.1 | ND | 1.09 | | 1.1 | ND | 1.06 | | 1.1 | ND | 1.12 | | 1.1 | ND | 1.12 | | 1.1 | ND | 1.06 | | 1.1 |
| METHYL METHANESULFONATE | 66-27-3 | 26 | ug/l | ND | 1.02 | | 1 | ND | 1.08 | | 1.1 | ND | 1.09 | | 1.1 | ND | 1.06 | | 1.1 | ND | 1.12 | | 1.1 | ND | 1.12 | | 1.1 | ND | 1.06 | | 1.1 |
| METHYL PARATHION | 298-00-0 | 200 | ug/l | ND | 1.02 | | 1 | ND | 1.08 | | 1.1 | ND | 1.09 | | 1.1 | ND | 1.06 | | 1.1 | ND | 1.12 | | 1.1 | ND | 1.12 | | 1.1 | ND | 1.06 | | 1.1 |
| NAPHTHALENE | 91-20-3 | 30000 | ug/l | 0.058 | 1.02 | J | 0.2 | 0.11 | 1.08 | J | 0.22 | 0.07 | 1.09 | J | 0.22 | 0.079 | 1.06 | J | 0.21 | 0.074 | 1.12 | J | 0.22 | ND | 1.12 | | 0.22 | ND | 1.06 | | 0.21 |
| NITROBENZENE | 98-95-3 | 51000 | ug/l | ND | 1.02 | | 0.2 | ND | 1.08 | | 0.22 | ND | 1.09 | | 0.22 | ND | 1.06 | | 0.21 | ND | 1.12 | | 0.22 | ND | 1.12 | | 0.22 | ND | 1.06 | | 0.21 |
| N-NITROSODIETHYLAMINE | 55-18-5 | 0.043 | ug/l | ND | 1.02 | | ***1*** | ND | 1.08 | | ***1.1*** | ND | 1.09 | | ***1.1*** | ND | 1.06 | | ***1.1*** | ND | 1.12 | | ***1.1*** | ND | 1.12 | | ***1.1*** | ND | 1.06 | | ***1.1*** |
| N-NITROSODI-N-BUTYLAMINE | 924-16-3 | 11 | ug/l | ND | 1.02 | | 1 | ND | 1.08 | | 1.1 | ND | 1.09 | | 1.1 | ND | 1.06 | | 1.1 | ND | 1.12 | | 1.1 | ND | 1.12 | | 1.1 | ND | 1.06 | | 1.1 |
| N-NITROSODI-N-PROPYLAMINE | 621-64-7 | 370 | ug/l | ND | 1.02 | | 0.2 | ND | 1.08 | | 0.22 | ND | 1.09 | | 0.22 | ND | 1.06 | | 0.21 | ND | 1.12 | | 0.22 | ND | 1.12 | | 0.22 | ND | 1.06 | | 0.21 |
| N-NITROSODIPHENYLAMINE | 86-30-6 | 35000 | ug/l | ND | 1.02 | | 0.2 | ND | 1.08 | | 0.22 | ND | 1.09 | | 0.22 | ND | 1.06 | | 0.21 | ND | 1.12 | | 0.22 | ND | 1.12 | | 0.22 | ND | 1.06 | | 0.21 |
| N-NITROSOMETHYLETHYLAMINE | 10595-95-6 | NS | ug/l | ND | 1.02 | | 1 | ND | 1.08 | | 1.1 | ND | 1.09 | | 1.1 | ND | 1.06 | | 1.1 | ND | 1.12 | | 1.1 | ND | 1.12 | | 1.1 | ND | 1.06 | | 1.1 |
| N-NITROSOMORPHOLINE | 59-89-2 | NS | ug/l | ND | 1.02 | | 1 | ND | 1.08 | | 1.1 | ND | 1.09 | | 1.1 | ND | 1.06 | | 1.1 | ND | 1.12 | | 1.1 | ND | 1.12 | | 1.1 | ND | 1.06 | | 1.1 |
| N-NITROSOPIPERIDINE | 100-75-4 | NS | ug/l | ND | 1.02 | | 1 | ND | 1.08 | | 1.1 | ND | 1.09 | | 1.1 | ND | 1.06 | | 1.1 | ND | 1.12 | | 1.1 | ND | 1.12 | | 1.1 | ND | 1.06 | | 1.1 |
| N-NITROSOPYRROLIDINE | 930-55-2 | NS | ug/l | ND | 1.02 | | 1 | ND | 1.08 | | 1.1 | ND | 1.09 | | 1.1 | ND | 1.06 | | 1.1 | ND | 1.12 | | 1.1 | ND | 1.12 | | 1.1 | ND | 1.06 | | 1.1 |
| O,O,O-TRIETHYL PHOSPHOROTHIOATE | 126-68-1 | 5 | ug/l | ND | 1.02 | | 1 | ND | 1.08 | | 1.1 | ND | 1.09 | | 1.1 | ND | 1.06 | | 1.1 | ND | 1.12 | | 1.1 | ND | 1.12 | | 1.1 | ND | 1.06 | | 1.1 |
| O,O-DIETHYL O-PYRAZINYL PHOSPHOROTHIOATE | 297-97-2 | 5 | ug/l | ND | 1.02 | | 1 | ND | 1.08 | | 1.1 | ND | 1.09 | | 1.1 | ND | 1.06 | | 1.1 | ND | 1.12 | | 1.1 | ND | 1.12 | | 1.1 | ND | 1.06 | | 1.1 |
| O-TOLUIDINE | 95-53-4 | 11000 | ug/l | ND | 1.02 | | 1 | ND | 1.08 | | 1.1 | ND | 1.09 | | 1.1 | ND | 1.06 | | 1.1 | ND | 1.12 | | 1.1 | ND | 1.12 | | 1.1 | ND | 1.06 | | 1.1 |
| P-CHLOROANILINE | 106-47-8 | 410 | ug/l | ND | 1.02 | | 1 | ND | 1.08 | | 1.1 | ND | 1.09 | | 1.1 | ND | 1.06 | | 1.1 | ND | 1.12 | | 1.1 | ND | 1.12 | | 1.1 | ND | 1.06 | | 1.1 |
| PENTACHLOROBENZENE | 608-93-5 | 740 | ug/l | ND | 1.02 | | 1 | ND | 1.08 | | 1.1 | ND | 1.09 | | 1.1 | ND | 1.06 | | 1.1 | ND | 1.12 | | 1.1 | ND | 1.12 | | 1.1 | ND | 1.06 | | 1.1 |
| PENTACHLORONITROBENZENE | 82-68-8 | 440 | ug/l | ND | 1.02 | | 1 | ND | 1.08 | | 1.1 | ND | 1.09 | | 1.1 | ND | 1.06 | | 1.1 | ND | 1.12 | | 1.1 | ND | 1.12 | | 1.1 | ND | 1.06 | | 1.1 |
| PENTACHLOROPHENOL | 87-86-5 | 1000 | ug/l | 0.19 | 1.02 | J | 1 | ND | 1.08 | | 1.1 | 0.096 | 1.09 | J | 1.1 | ND | 1.06 | | 1.1 | ND | 1.12 | | 1.1 | 0.31 | 1.12 | J | 1.1 | 0.91 | 1.06 | J | 1.1 |
| PHENACETIN | 62-44-2 | 760000 | ug/l | ND | 1.02 | | 1 | ND | 1.08 | | 1.1 | ND | 1.09 | | 1.1 | ND | 1.06 | | 1.1 | ND | 1.12 | | 1.1 | ND | 1.12 | | 1.1 | ND | 1.06 | | 1.1 |
| PHENANTHRENE | 85-01-8 | 1100 | ug/l | 0.14 | 1.02 | JB | 0.2 | 0.084 | 1.08 | J | 0.22 | 0.19 | 1.09 | JB | 0.22 | 0.1 | 1.06 | J | 0.21 | 0.2 | 1.12 | J | 0.22 | 0.49 | 1.12 | B | 0.22 | 0.089 | 1.06 | JB | 0.21 |
| PHENOL | 108-95-2 | 400000 | ug/l | 0.096 | 1.02 | J | 0.2 | ND | 1.08 | | 0.22 | ND | 1.09 | | 0.22 | ND | 1.06 | | 0.21 | ND | 1.12 | | 0.22 | ND | 1.12 | | 0.22 | 0.043 | 1.06 | J | 0.21 |
| PHORATE | 298-02-2 | 4.1 | ug/l | ND | 1.02 | | 1 | ND | 1.08 | | 1.1 | ND | 1.09 | | 1.1 | ND | 1.06 | | 1.1 | ND | 1.12 | | 1.1 | ND | 1.12 | | 1.1 | ND | 1.06 | | 1.1 |
| P-NITROANILINE | 100-01-6 | 5.8 | ug/l | ND | 1.02 | | 5.1 | ND | 1.08 | | 5.4 | ND | 1.09 | | 5.4 | ND | 1.06 | | 5.3 | ND | 1.12 | | 5.6 | ND | 1.12 | | 5.6 | ND | 1.06 | | 5.3 |
| P-PHENYLENEDIAMINE | 106-50-3 | NS | ug/l | ND | 1.02 | | 41 | ND | 1.08 | | 43 | ND | 1.09 | | 44 | ND | 1.06 | | 42 | ND | 1.12 | | 45 | ND | 1.12 | | 45 | ND | 1.06 | | 42 |
| PROPYZAMIDE | 23950-58-5 | 50 | ug/l | ND | 1.02 | | 1 | ND | 1.08 | | 1.1 | ND | 1.09 | | 1.1 | ND | 1.06 | | 1.1 | ND | 1.12 | | 1.1 | ND | 1.12 | | 1.1 | ND | 1.06 | | 1.1 |
| PYRENE | 129-00-0 | 130 | ug/l | 0.13 | 1.02 | J | 0.2 | ND | 1.08 | | 0.22 | 0.12 | 1.09 | J | 0.22 | ND | 1.06 | | 0.21 | 0.1 | 1.12 | J | 0.22 | 2.2 | 1.12 | | 0.22 | ND | 1.06 | | 0.21 |
| PYRIDINE | 110-86-1 | 200 | ug/l | ND | 1.02 | | 1 | ND | 1.08 | | 1.1 | ND | 1.09 | | 1.1 | ND | 1.06 | | 1.1 | ND | 1.12 | | 1.1 | ND | 1.12 | | 1.1 | ND | 1.06 | | 1.1 |
| SAFROLE | 94-59-7 | NS | ug/l | ND | 1.02 | | 1 | ND | 1.08 | | 1.1 | ND | 1.09 | | 1.1 | ND | 1.06 | | 1.1 | ND | 1.12 | | 1.1 | ND | 1.12 | | 1.1 | ND | 1.06 | | 1.1 |
| SULFOTEP | 3689-24-5 | 10 | ug/l | ND | 1.02 | | 1 | ND | 1.08 | | 1.1 | ND | 1.09 | | 1.1 | ND | 1.06 | | 1.1 | ND | 1.12 | | 1.1 | ND | 1.12 | | 1.1 | ND | 1.06 | | 1.1 |
| ***RCRA APPENDIX IX METALS - Dissolved (Method 6010/7471)*** | | | | Result | DF | Q | RL | Result | DF | Q | RL | Result | DF | Q | RL | Result | DF | Q | RL | Result | DF | Q | RL | Result | DF | Q | RL | Result | DF | Q | RL |
| ANTIMONY | 7440-36-0 | 6000 | ug/l | 0.38 | 1 | JB | 2 | ND | 1 | | 2 | 0.22 | 1 | JB | 2 | 0.11 | 1 | JB | 2 | 0.23 | 1 | JB | 2 | 0.37 | 1 | B | 2 | 0.5 | 1 | B | 2 |
| ARSENIC | 7440-38-2 | 50000 | ug/l | ND | 1 | | 1 | 0.23 | 1 | B | 1 | 7.2 | 1 | | 1 | ND | 1 | | 1 | 0.7 | 1 | B | 1 | 0.67 | 1 | JB | 1 | 0.54 | 1 | JB | 1 |
| BARIUM | 7440-39-3 | 2000000 | ug/l | 23 | 1 | | 10 | 28.8 | 1 | | 10 | 120 | 1 | | 10 | 37.1 | 1 | | 10 | 39.5 | 1 | | 10 | 29.9 | 1 | | 10 | 41.5 | 1 | | 10 |
| BERYLLIUM | 7440-41-7 | 4000 | ug/l | ND | 1 | | 1 | ND | 1 | | 1 | ND | 1 | | 1 | ND | 1 | | 1 | ND | 1 | | 1 | ND | 1 | | 1 | ND | 1 | | 1 |
| CADMIUM | 7440-43-9 | 5000 | ug/l | 1.1 | 1 | J | 1 | 0.19 | 1 | B | 1 | ND | 1 | | 1 | 0.18 | 1 | B | 1 | 0.27 | 1 | B | 1 | 0.64 | 1 | B | 1 | ND | 1 | | 1 |
| CHROMIUM | 7440-47-3 | 100000 | ug/l | 3 | 1 | J | 2 | 3.3 | 1 | J | 2 | 3.3 | 1 | J | 2 | 3.5 | 1 | J | 2 | 4.1 | 1 | J | 2 | 3.5 | 1 | J | 2 | 6.1 | 1 | J | 2 |
| COBALT | 7440-48-4 | 2000000 | ug/l | 8.2 | 1 | | 0.5 | 0.98 | 1 | | 0.5 | 0.49 | 1 | B | 0.5 | 0.83 | 1 | | 0.5 | 1 | 1 | | 0.5 | 1.1 | 1 | | 0.5 | 0.36 | 1 | B | 0.5 |
| COPPER | 7440-50-8 | 1000000 | ug/l | 2.7 | 1 | | 2 | 0.67 | 1 | B | 2 | 0.46 | 1 | B | 2 | 0.75 | 1 | B | 2 | 0.91 | 1 | B | 2 | 1.1 | 1 | B | 2 | 1.3 | 1 | B | 2 |
| LEAD | 7439-92-1 | 5000 | ug/l | 0.11 | 1 | B | 1 | 0.13 | 1 | B | 1 | 0.083 | 1 | B | 1 | 0.091 | 1 | B | 1 | 0.26 | 1 | B | 1 | ND | 1 | | 1 | ND | 1 | | 1 |
| MERCURY | 7439-97-6 | 2000 | ug/l | 0.049 | 1 | JB | 0.2 | ND | 1 | | 0.2 | 0.037 | 1 | JB | 0.2 | 0.041 | 1 | JB | 0.2 | 0.06 | 1 | JB | 0.2 | 0.048 | 1 | JB | 0.2 | 0.037 | 1 | JB | 0.2 |
| NICKEL | 7440-02-0 | 100000 | ug/l | 12.2 | 1 | | 1 | 1.3 | 1 | | 1 | 1 | 1 | | 1 | 1.7 | 1 | | 1 | 1.9 | 1 | | 1 | 2.1 | 1 | | 1 | 0.89 | 1 | B | 1 |
| SELENIUM | 7782-49-2 | 50000 | ug/l | ND | 1 | | 5 | 0.22 | 1 | B | 5 | 0.6 | 1 | B | 5 | 1.1 | 1 | B | 5 | 1.6 | 1 | B | 5 | 2.2 | 1 | JB | 5 | 3.9 | 1 | JB | 5 |
| SILVER | 7440-22-4 | 100000 | ug/l | ND | 1 | | 1 | ND | 1 | | 1 | ND | 1 | | 1 | ND | 1 | | 1 | 0.079 | 1 | B | 1 | ND | 1 | | 1 | ND | 1 | | 1 |
| THALLIUM | 7440-28-0 | 2000 | ug/l | 0.13 | 1 | JB | 1 | 0.038 | 1 | B | 1 | 0.057 | 1 | JB | 1 | ND | 1 | | 1 | 0.068 | 1 | B | 1 | 0.065 | 1 | B | 1 | 0.33 | 1 | B | 1 |
| TIN | 7440-31-5 | 61000000 | ug/l | 7.4 | 1 | J | 5 | 2.8 | 1 | JB | 5 | 4.9 | 1 | JB | 5 | 5.3 | 1 | J | 5 | 8 | 1 | J | 5 | 5.4 | 1 | J | 5 | 9 | 1 | J | 5 |
| VANADIUM (FUME OR DUST) | 7440-62-2 | 720000 | ug/l | 0.6 | 1 | B | 1 | 0.38 | 1 | B | 1 | ND | 1 | | 1 | ND | 1 | | 1 | 0.37 | 1 | B | 1 | ND | 1 | | 1 | ND | 1 | | 1 |
| ZINC | 7440-66-6 | 2000000 | ug/l | 14.8 | 1 | | 5 | 8.8 | 1 | J | 5 | 6.3 | 1 | | 5 | 3.7 | 1 | B | 5 | 8.6 | 1 | | 5 | 8.2 | 1 | | 5 | 4.3 | 1 | B | 5 |

**Table 5**
**Summary of Groundwater Analytical Results - October 2008**
**Comparison to Pennsylvania Non-Residential Non-Use Aquifer Groundwater MSCs**
**U.S. Steel - RCRA Groundwater Sampling**
**Fairless Hills, Pennsylvania**

| | CAS No | PADEP Non-Residentail Non-Use Aquifer GW MSC | Location ID | MW1-26-27 | | | | MW1-27-19 | | | | MW1-28-74 | | | | MW2-1-22 | | | | MW2-3-33 | | | | MW3-12-31 | | | | MW3-2-27 | | | |
|---|---|---|---|---|---|---|---|---|---|---|---|---|---|---|---|---|---|---|---|---|---|---|---|---|---|---|---|---|---|---|---|
| | | | Sample ID | MW1-26-27_10-08-N | | | | MW1-27-19_10-08-N | | | | MW1-28-74_10-08-N | | | | MW2-1-22_10-08-N | | | | MW2-3-33_10-08-N | | | | MW3-12-31_10-08-N | | | | MW3-2-27_10-08-N | | | |
| | | | Sample Date | 10/16/2008 | | | | 10/20/2008 | | | | 10/15/2008 | | | | 10/16/2008 | | | | 10/16/2008 | | | | 10/16/2008 | | | | 10/16/2008 | | | |
| | | | Lab Id | C8J180168008 | | | | C8J220361002 | | | | C8J160299017 | | | | C8J180168012 | | | | C8J180168005 | | | | C8J180168013 | | | | C8J180168033 | | | |
| ***RCRA APPENDIX IX VOLATILE ORGANIC COMPOUNDS (Method 8260)*** | | | | Result | DF | Q | RL | Result | DF | Q | RL | Result | DF | Q | RL | Result | DF | Q | RL | Result | DF | Q | RL | Result | DF | Q | RL | Result | DF | Q | RL |
| 1,1,1,2-TETRACHLOROETHANE | 630-20-6 | 7000 | ug/l | ND | 1 | | 1 | ND | 1 | | 1 | ND | 1 | | 1 | ND | 1 | | 1 | ND | 1 | | 1 | ND | 1 | | 1 | ND | 1 | | 1 |
| 1,1,1-TRICHLOROETHANE | 71-55-6 | 2000 | ug/l | ND | 1 | | 1 | ND | 1 | | 1 | ND | 1 | | 1 | ND | 1 | | 1 | ND | 1 | | 1 | ND | 1 | | 1 | ND | 1 | | 1 |
| 1,1,2,2-TETRACHLOROETHANE | 79-34-5 | 30 | ug/l | ND | 1 | | 1 | ND | 1 | | 1 | ND | 1 | | 1 | ND | 1 | | 1 | ND | 1 | | 1 | ND | 1 | | 1 | ND | 1 | | 1 |
| 1,1,2-TRICHLOROETHANE | 79-00-5 | 50 | ug/l | ND | 1 | | 1 | ND | 1 | | 1 | ND | 1 | | 1 | ND | 1 | | 1 | ND | 1 | | 1 | ND | 1 | | 1 | ND | 1 | | 1 |
| 1,1-DICHLOROETHANE | 75-34-3 | 1100 | ug/l | ND | 1 | | 1 | ND | 1 | | 1 | ND | 1 | | 1 | ND | 1 | | 1 | ND | 1 | | 1 | ND | 1 | | 1 | ND | 1 | | 1 |
| 1,1-DICHLOROETHYLENE | 75-35-4 | 70 | ug/l | ND | 1 | | 1 | ND | 1 | | 1 | ND | 1 | | 1 | ND | 1 | | 1 | ND | 1 | | 1 | ND | 1 | | 1 | ND | 1 | | 1 |
| 1,2,3-TRICHLOROPROPANE | 96-18-4 | 4000 | ug/l | ND | 1 | | 1 | ND | 1 | | 1 | ND | 1 | | 1 | ND | 1 | | 1 | ND | 1 | | 1 | ND | 1 | | 1 | ND | 1 | | 1 |
| 1,2-DIBROMO-3-CHLOROPROPANE (DBCP) | 96-12-8 | 20 | ug/l | ND | 1 | | 1 | ND | 1 | | 1 | ND | 1 | | 1 | ND | 1 | | 1 | ND | 1 | | 1 | ND | 1 | | 1 | ND | 1 | | 1 |
| 1,2-DIBROMOETHANE | 106-93-4 | 5 | ug/l | ND | 1 | | 1 | ND | 1 | | 1 | ND | 1 | | 1 | ND | 1 | | 1 | ND | 1 | | 1 | ND | 1 | | 1 | ND | 1 | | 1 |
| 1,2-DICHLOROETHANE | 107-06-2 | 50 | ug/l | ND | 1 | | 1 | ND | 1 | | 1 | ND | 1 | | 1 | ND | 1 | | 1 | ND | 1 | | 1 | ND | 1 | | 1 | ND | 1 | | 1 |
| 1,2-DICHLOROPROPANE | 78-87-5 | 50 | ug/l | ND | 1 | | 1 | ND | 1 | | 1 | ND | 1 | | 1 | ND | 1 | | 1 | ND | 1 | | 1 | ND | 1 | | 1 | ND | 1 | | 1 |
| 1,4-DIOXANE | 123-91-1 | 240 | ug/l | ND | 1 | | 200 | ND | 1 | | 200 | ND | 1 | | 200 | ND | 1 | | 200 | ND | 1 | | 200 | ND | 1 | | 200 | ND | 1 | | 200 |
| 2-BUTANONE (MEK) | 78-93-3 | 580000 | ug/l | 1.7 | 1 | J | 5 | ND | 1 | | 5 | 0.65 | 1 | J | 5 | ND | 1 | | 5 | ND | 1 | | 5 | ND | 1 | | 5 | ND | 1 | | 5 |
| 2-CHLOR-1,3-BUTADIENE | 126-99-8 | 4100 | ug/l | ND | 1 | | 1 | ND | 1 | | 1 | ND | 1 | | 1 | ND | 1 | | 1 | ND | 1 | | 1 | ND | 1 | | 1 | ND | 1 | | 1 |
| 2-METHYL-1-PROPANOL | 78-83-1 | 610000 | ug/l | ND | 1 | | 40 | ND | 1 | | 40 | ND | 1 | | 40 | ND | 1 | | 40 | ND | 1 | | 40 | ND | 1 | | 40 | ND | 1 | | 40 |
| 4-METHYL-2-PENTANONE (MIBK) | 108-10-1 | 41000 | ug/l | ND | 1 | | 5 | ND | 1 | | 5 | ND | 1 | | 5 | ND | 1 | | 5 | ND | 1 | | 5 | ND | 1 | | 5 | ND | 1 | | 5 |
| ACETONE | 67-64-1 | 100000 | ug/l | 9.1 | 1 | | 5 | 2.7 | 1 | J | 5 | 2.7 | 1 | J | 5 | ND | 1 | | 5 | 3.6 | 1 | J | 5 | ND | 1 | | 5 | 5.4 | 1 | | 5 |
| ACETONITRILE | 75-05-8 | 3500 | ug/l | ND | 1 | | 20 | ND | 1 | | 20 | ND | 1 | | 20 | ND | 1 | | 20 | ND | 1 | | 20 | ND | 1 | | 20 | ND | 1 | | 20 |
| ACROLEIN | 107-02-8 | 1.2 | ug/l | ND | 1 | | ***20*** | ND | 1 | | ***20*** | ND | 1 | | ***20*** | ND | 1 | | ***20*** | ND | 1 | | ***20*** | ND | 1 | | ***20*** | ND | 1 | | ***20*** |
| ACRYLONITRILE | 107-13-1 | 270 | ug/l | ND | 1 | | 20 | ND | 1 | | 20 | ND | 1 | | 20 | ND | 1 | | 20 | ND | 1 | | 20 | ND | 1 | | 20 | ND | 1 | | 20 |
| ALLYLCHLORIDE | 107-05-1 | 580 | ug/l | ND | 1 | | 1 | ND | 1 | | 1 | ND | 1 | | 1 | ND | 1 | | 1 | ND | 1 | | 1 | ND | 1 | | 1 | ND | 1 | | 1 |
| BENZENE | 71-43-2 | 500 | ug/l | ND | 1 | | 1 | ND | 1 | | 1 | ND | 1 | | 1 | ND | 1 | | 1 | ND | 1 | | 1 | ND | 1 | | 1 | ND | 1 | | 1 |
| BROMODICHLOROMETHANE | 75-27-4 | 100 | ug/l | ND | 1 | | 1 | ND | 1 | | 1 | ND | 1 | | 1 | ND | 1 | | 1 | ND | 1 | | 1 | ND | 1 | | 1 | ND | 1 | | 1 |
| BROMOMETHANE | 74-83-9 | 1000 | ug/l | ND | 1 | | 1 | ND | 1 | | 1 | ND | 1 | | 1 | ND | 1 | | 1 | ND | 1 | | 1 | ND | 1 | | 1 | ND | 1 | | 1 |
| CARBON DISULFIDE | 75-15-0 | 4100 | ug/l | ND | 1 | | 1 | ND | 1 | | 1 | ND | 1 | | 1 | 0.28 | 1 | J | 1 | ND | 1 | | 1 | ND | 1 | | 1 | 0.31 | 1 | J | 1 |
| CARBON TETRACHLORIDE | 56-23-5 | 50 | ug/l | ND | 1 | | 1 | ND | 1 | | 1 | ND | 1 | | 1 | ND | 1 | | 1 | ND | 1 | | 1 | ND | 1 | | 1 | ND | 1 | | 1 |
| CFC-11 | 75-69-4 | 200000 | ug/l | ND | 1 | | 1 | ND | 1 | | 1 | ND | 1 | | 1 | ND | 1 | | 1 | ND | 1 | | 1 | ND | 1 | | 1 | ND | 1 | | 1 |
| CFC-12 | 75-71-8 | 100000 | ug/l | ND | 1 | | 1 | ND | 1 | | 1 | ND | 1 | | 1 | ND | 1 | | 1 | ND | 1 | | 1 | ND | 1 | | 1 | ND | 1 | | 1 |
| CHLOROBENZENE | 108-90-7 | 10000 | ug/l | ND | 1 | | 1 | ND | 1 | | 1 | ND | 1 | | 1 | ND | 1 | | 1 | ND | 1 | | 1 | ND | 1 | | 1 | ND | 1 | | 1 |
| CHLORODIBROMOMETHANE | 124-48-1 | 10000 | ug/l | ND | 1 | | 1 | ND | 1 | | 1 | ND | 1 | | 1 | ND | 1 | | 1 | ND | 1 | | 1 | ND | 1 | | 1 | ND | 1 | | 1 |
| CHLOROETHANE | 75-00-3 | 90000 | ug/l | ND | 1 | | 1 | ND | 1 | | 1 | ND | 1 | | 1 | ND | 1 | | 1 | ND | 1 | | 1 | ND | 1 | | 1 | ND | 1 | | 1 |
| CHLOROFORM | 67-66-3 | 1000 | ug/l | 0.28 | 1 | J | 1 | ND | 1 | | 1 | ND | 1 | | 1 | ND | 1 | | 1 | ND | 1 | | 1 | ND | 1 | | 1 | ND | 1 | | 1 |
| CHLOROMETHANE | 74-87-3 | 300 | ug/l | ND | 1 | | 1 | ND | 1 | | 1 | ND | 1 | | 1 | ND | 1 | | 1 | ND | 1 | | 1 | ND | 1 | | 1 | ND | 1 | | 1 |
| CIS-1,3-DICHLOROPROPENE | 10061-01-5 | NS | ug/l | ND | 1 | | 1 | ND | 1 | | 1 | ND | 1 | | 1 | ND | 1 | | 1 | ND | 1 | | 1 | ND | 1 | | 1 | ND | 1 | | 1 |
| DIBROMOMETHANE | 74-95-3 | 20000 | ug/l | ND | 1 | | 1 | ND | 1 | | 1 | ND | 1 | | 1 | ND | 1 | | 1 | ND | 1 | | 1 | ND | 1 | | 1 | ND | 1 | | 1 |
| DICHLOROMETHANE | 75-09-2 | 500 | ug/l | ND | 1 | | 1 | ND | 1 | | 1 | ND | 1 | | 1 | ND | 1 | | 1 | ND | 1 | | 1 | ND | 1 | | 1 | ND | 1 | | 1 |
| ETHYL METHACRYLATE | 97-63-2 | 1800 | ug/l | ND | 1 | | 1 | ND | 1 | | 1 | ND | 1 | | 1 | ND | 1 | | 1 | ND | 1 | | 1 | ND | 1 | | 1 | ND | 1 | | 1 |
| ETHYLBENZENE | 100-41-4 | 70000 | ug/l | ND | 1 | | 1 | ND | 1 | | 1 | ND | 1 | | 1 | ND | 1 | | 1 | ND | 1 | | 1 | ND | 1 | | 1 | ND | 1 | | 1 |
| IODOMETHANE | 74-88-4 | 5 | ug/l | 0.48 | 1 | J | 1 | ND | 1 | | 1 | ND | 1 | | 1 | ND | 1 | | 1 | ND | 1 | | 1 | ND | 1 | | 1 | ND | 1 | | 1 |
| METHYL METHACRYLATE | 80-62-6 | 410000 | ug/l | ND | 1 | | 1 | ND | 1 | | 1 | ND | 1 | | 1 | ND | 1 | | 1 | ND | 1 | | 1 | ND | 1 | | 1 | ND | 1 | | 1 |
| METHYL N-BUTYL KETONE | 591-78-6 | 5 | ug/l | ND | 1 | | 5 | ND | 1 | | 5 | ND | 1 | | 5 | ND | 1 | | 5 | ND | 1 | | 5 | ND | 1 | | 5 | ND | 1 | | 5 |
| METHYLACRYLONITRILE | 126-98-7 | 4.1 | ug/l | ND | 1 | | 1 | ND | 1 | | 1 | ND | 1 | | 1 | ND | 1 | | 1 | ND | 1 | | 1 | ND | 1 | | 1 | ND | 1 | | 1 |
| PENTACHLOROETHANE | 76-01-7 | 5 | ug/l | ND | 1.08 | | 2.2 | ND | 1.05 | | 2.1 | ND | 1.03 | | 2.1 | ND | 1.03 | | 2.1 | ND | 1.03 | | 2.1 | ND | 1.04 | | 2.1 | ND | 1.06 | | 2.1 |
| PROPIONITRILE | 107-12-0 | 5 | ug/l | ND | 1 | | 2 | ND | 1 | | 2 | ND | 1 | | 2 | ND | 1 | | 2 | ND | 1 | | 2 | ND | 1 | | 2 | ND | 1 | | 2 |
| STYRENE (MONOMER) | 100-42-5 | 10000 | ug/l | ND | 1 | | 1 | ND | 1 | | 1 | ND | 1 | | 1 | ND | 1 | | 1 | ND | 1 | | 1 | ND | 1 | | 1 | ND | 1 | | 1 |
| TETRACHLOROETHENE | 127-18-4 | 50 | ug/l | ND | 1 | | 1 | ND | 1 | | 1 | ND | 1 | | 1 | ND | 1 | | 1 | ND | 1 | | 1 | ND | 1 | | 1 | ND | 1 | | 1 |
| TOLUENE | 108-88-3 | 100000 | ug/l | ND | 1 | | 1 | ND | 1 | | 1 | ND | 1 | | 1 | ND | 1 | | 1 | ND | 1 | | 1 | 0.25 | 1 | J | 1 | ND | 1 | | 1 |
| TRANS-1,2-DICHLOROETHENE | 156-60-5 | 1000 | ug/l | ND | 1 | | 1 | ND | 1 | | 1 | ND | 1 | | 1 | ND | 1 | | 1 | ND | 1 | | 1 | ND | 1 | | 1 | ND | 1 | | 1 |
| TRANS-1,3-DICHLOROPROPENE | 10061-02-6 | NS | ug/l | ND | 1 | | 1 | ND | 1 | | 1 | ND | 1 | | 1 | ND | 1 | | 1 | ND | 1 | | 1 | ND | 1 | | 1 | ND | 1 | | 1 |
| TRANS-1,4-DICHLOROBUTENE | 110-57-6 | 5 | ug/l | ND | 1 | | 1 | ND | 1 | | 1 | ND | 1 | | 1 | ND | 1 | | 1 | ND | 1 | | 1 | ND | 1 | | 1 | ND | 1 | | 1 |
| TRIBROMOMETHANE | 75-25-2 | 10000 | ug/l | ND | 1 | | 1 | ND | 1 | | 1 | ND | 1 | | 1 | ND | 1 | | 1 | ND | 1 | | 1 | ND | 1 | | 1 | ND | 1 | | 1 |
| TRICHLOROETHYLENE | 79-01-6 | 50 | ug/l | ND | 1 | | 1 | ND | 1 | | 1 | ND | 1 | | 1 | ND | 1 | | 1 | ND | 1 | | 1 | ND | 1 | | 1 | ND | 1 | | 1 |
| VINYL ACETATE | 108-05-4 | 1200 | ug/l | ND | 1 | | 1 | ND | 1 | | 1 | ND | 1 | | 1 | ND | 1 | | 1 | ND | 1 | | 1 | ND | 1 | | 1 | ND | 1 | | 1 |
| VINYL CHLORIDE | 75-01-4 | 20 | ug/l | ND | 1 | | 1 | ND | 1 | | 1 | ND | 1 | | 1 | ND | 1 | | 1 | ND | 1 | | 1 | 0.56 | 1 | J | 1 | ND | 1 | | 1 |
| XYLENE (TOTAL) | 1330-20-7 | 180000 | ug/l | ND | 1 | | 3 | ND | 1 | | 3 | ND | 1 | | 3 | ND | 1 | | 3 | ND | 1 | | 3 | ND | 1 | | 3 | ND | 1 | | 3 |

**Table 5**
**Summary of Groundwater Analytical Results - October 2008**
**Comparison to Pennsylvania Non-Residential Non-Use Aquifer Groundwater MSCs**
**U.S. Steel - RCRA Groundwater Sampling**
**Fairless Hills, Pennsylvania**

| | CAS No | PADEP Non-Residentail Non-Use Aquifer GW MSC | Location ID | MW1-26-27 | | | | MW1-27-19 | | | | MW1-28-74 | | | | MW2-1-22 | | | | MW2-3-33 | | | | MW3-12-31 | | | | MW3-2-27 | | | |
|---|---|---|---|---|---|---|---|---|---|---|---|---|---|---|---|---|---|---|---|---|---|---|---|---|---|---|---|---|---|---|---|
| | | | Sample ID | MW1-26-27_10-08-N | | | | MW1-27-19_10-08-N | | | | MW1-28-74_10-08-N | | | | MW2-1-22_10-08-N | | | | MW2-3-33_10-08-N | | | | MW3-12-31_10-08-N | | | | MW3-2-27_10-08-N | | | |
| | | | Sample Date | 10/16/2008 | | | | 10/20/2008 | | | | 10/15/2008 | | | | 10/16/2008 | | | | 10/16/2008 | | | | 10/16/2008 | | | | 10/16/2008 | | | |
| | | | Lab Id | C8J180168008 | | | | C8J220361002 | | | | C8J160299017 | | | | C8J180168012 | | | | C8J180168005 | | | | C8J180168013 | | | | C8J180168033 | | | |
| ***RCRA APPENDIX IX SEMI-VOLATILE ORGANIC COMPOUNDS (Method 8270)*** | | | | Result | DF | Q | RL | Result | DF | Q | RL | Result | DF | Q | RL | Result | DF | Q | RL | Result | DF | Q | RL | Result | DF | Q | RL | Result | DF | Q | RL |
| 1,2,4,5-TETRACHLOROBENZENE | 95-94-3 | 580 | ug/l | ND | 1.08 | | 1.1 | ND | 1.05 | | 1 | ND | 1.03 | | 1 | ND | 1.03 | | 1 | ND | 1.03 | | 1 | ND | 1.04 | | 1 | ND | 1.06 | | 1.1 |
| 1,2,4-TRICHLOROBENZENE | 120-82-1 | 44000 | ug/l | ND | 1.08 | | 0.22 | ND | 1.05 | | 0.21 | ND | 1.03 | | 0.21 | ND | 1.03 | | 0.21 | ND | 1.03 | | 0.21 | ND | 1.04 | | 0.21 | ND | 1.06 | | 0.21 |
| 1,2-DICHLOROBENZENE | 95-50-1 | 60000 | ug/l | ND | 1.08 | | 0.22 | ND | 1.05 | | 0.21 | ND | 1.03 | | 0.21 | ND | 1.03 | | 0.21 | ND | 1.03 | | 0.21 | ND | 1.04 | | 0.21 | ND | 1.06 | | 0.21 |
| 1,3,5-TRINITROBENZENE | 99-35-4 | NS | ug/l | ND | 1.08 | | 1.1 | ND | 1.05 | | 1 | ND | 1.03 | | 1 | ND | 1.03 | | 1 | ND | 1.03 | | 1 | ND | 1.04 | | 1 | ND | 1.06 | | 1.1 |
| 1,4-DICHLOROBENZENE | 106-46-7 | 7500 | ug/l | ND | 1.08 | | 0.22 | ND | 1.05 | | 0.21 | ND | 1.03 | | 0.21 | ND | 1.03 | | 0.21 | ND | 1.03 | | 0.21 | ND | 1.04 | | 0.21 | ND | 1.06 | | 0.21 |
| 1,4-NAPHTHOQUINONE | 130-15-4 | 5 | ug/l | ND | 1.08 | | 1.1 | ND | 1.05 | | 1 | ND | 1.03 | | 1 | ND | 1.03 | | 1 | ND | 1.03 | | 1 | ND | 1.04 | | 1 | ND | 1.06 | | 1.1 |
| 1-NAPHTHYLAMINE | 134-32-7 | 1400 | ug/l | ND | 1.08 | | 1.1 | ND | 1.05 | | 1 | ND | 1.03 | | 1 | ND | 1.03 | | 1 | ND | 1.03 | | 1 | ND | 1.04 | | 1 | ND | 1.06 | | 1.1 |
| 2,4,5-TRICHLOROPHENOL | 95-95-4 | 1000000 | ug/l | ND | 1.08 | | 1.1 | ND | 1.05 | | 1 | ND | 1.03 | | 1 | ND | 1.03 | | 1 | 0.42 | 1.03 | J | 1 | 0.81 | 1.04 | J | 1 | ND | 1.06 | | 1.1 |
| 2,4,6-TRICHLOROPHENOL | 88-06-2 | 31000 | ug/l | 0.13 | 1.08 | J | 1.1 | ND | 1.05 | | 1 | ND | 1.03 | | 1 | ND | 1.03 | | 1 | 0.14 | 1.03 | J | 1 | 0.24 | 1.04 | J | 1 | ND | 1.06 | | 1.1 |
| 2,4-DICHLOROPHENOL | 120-83-2 | 20000 | ug/l | 0.099 | 1.08 | J | 0.22 | ND | 1.05 | | 0.21 | ND | 1.03 | | 0.21 | ND | 1.03 | | 0.21 | 0.2 | 1.03 | J | 0.21 | ND | 1.04 | | 0.21 | ND | 1.06 | | 0.21 |
| 2,4-DIMETHYLPHENOL | 105-67-9 | 2000000 | ug/l | ND | 1.08 | | 1.1 | ND | 1.05 | | 1 | ND | 1.03 | | 1 | ND | 1.03 | | 1 | 0.12 | 1.03 | J | 1 | 0.14 | 1.04 | J | 1 | ND | 1.06 | | 1.1 |
| 2,4-DINITROPHENOL | 51-28-5 | 410 | ug/l | ND | 1.08 | | 5.4 | ND | 1.05 | | 5.2 | ND | 1.03 | | 5.2 | ND | 1.03 | | 5.2 | 1.7 | 1.03 | J | 5.2 | ND | 1.04 | | 5.2 | ND | 1.06 | | 5.3 |
| 2,4-DINITROTOLUENE | 121-14-2 | 8400 | ug/l | ND | 1.08 | | 1.1 | 0.079 | 1.05 | J | 1 | ND | 1.03 | | 1 | ND | 1.03 | | 1 | 0.18 | 1.03 | J | 1 | 0.65 | 1.04 | J | 1 | ND | 1.06 | | 1.1 |
| 2,6-DICHLOROPHENOL | 87-65-0 | NS | ug/l | ND | 1.08 | | 0.22 | ND | 1.05 | | 0.21 | ND | 1.03 | | 0.21 | ND | 1.03 | | 0.21 | ND | 1.03 | | 0.21 | ND | 1.04 | | 0.21 | ND | 1.06 | | 0.21 |
| 2,6-DINITROTOLUENE | 606-20-2 | 100000 | ug/l | ND | 1.08 | | 1.1 | ND | 1.05 | | 1 | ND | 1.03 | | 1 | ND | 1.03 | | 1 | 0.19 | 1.03 | J | 1 | ND | 1.04 | | 1 | ND | 1.06 | | 1.1 |
| 2-ACETYLAMINOFLUORENE | 53-96-3 | 680 | ug/l | ND | 1.08 | | 1.1 | ND | 1.05 | | 1 | ND | 1.03 | | 1 | ND | 1.03 | | 1 | ND | 1.03 | | 1 | ND | 1.04 | | 1 | ND | 1.06 | | 1.1 |
| 2-CHLORONAPHTHALENE | 91-58-7 | 8200 | ug/l | ND | 1.08 | | 0.22 | ND | 1.05 | | 0.21 | ND | 1.03 | | 0.21 | ND | 1.03 | | 0.21 | 0.067 | 1.03 | J | 0.21 | ND | 1.04 | | 0.21 | ND | 1.06 | | 0.21 |
| 2-CHLOROPHENOL | 95-57-8 | 40 | ug/l | ND | 1.08 | | 1.1 | ND | 1.05 | | 1 | ND | 1.03 | | 1 | ND | 1.03 | | 1 | ND | 1.03 | | 1 | ND | 1.04 | | 1 | ND | 1.06 | | 1.1 |
| 2-METHYL PYRIDINE (2-PICOLINE) | 109-06-8 | 5 | ug/l | ND | 1.08 | | 1.1 | ND | 1.05 | | 1 | ND | 1.03 | | 1 | ND | 1.03 | | 1 | ND | 1.03 | | 1 | ND | 1.04 | | 1 | ND | 1.06 | | 1.1 |
| 2-METHYLNAPHTHALENE | 91-57-6 | 2000 | ug/l | ND | 1.08 | | 0.22 | ND | 1.05 | | 0.21 | ND | 1.03 | | 0.21 | ND | 1.03 | | 0.21 | 0.088 | 1.03 | J | 0.21 | 0.24 | 1.04 | | 0.21 | ND | 1.06 | | 0.21 |
| 2-METHYLPHENOL | 95-48-7 | 510000 | ug/l | ND | 1.08 | | 1.1 | ND | 1.05 | | 1 | ND | 1.03 | | 1 | ND | 1.03 | | 1 | 0.13 | 1.03 | J | 1 | 0.23 | 1.04 | J | 1 | ND | 1.06 | | 1.1 |
| 2-NAPHTHALENAMINE (2-NAPHTHYLAMINE) | 91-59-8 | 1400 | ug/l | ND | 1.08 | | 1.1 | ND | 1.05 | | 1 | ND | 1.03 | | 1 | ND | 1.03 | | 1 | ND | 1.03 | | 1 | ND | 1.04 | | 1 | ND | 1.06 | | 1.1 |
| 2-NITROANILINE | 88-74-4 | 5.8 | ug/l | ND | 1.08 | | 5.4 | ND | 1.05 | | 5.2 | ND | 1.03 | | 5.2 | ND | 1.03 | | 5.2 | 0.37 | 1.03 | J | 5.2 | ND | 1.04 | | 5.2 | ND | 1.06 | | 5.3 |
| 2-NITROPHENOL | 88-75-5 | 820000 | ug/l | ND | 1.08 | | 1.1 | ND | 1.05 | | 1 | ND | 1.03 | | 1 | ND | 1.03 | | 1 | 0.082 | 1.03 | J | 1 | ND | 1.04 | | 1 | ND | 1.06 | | 1.1 |
| 3,3'-DICHLOROBENZIDINE | 91-94-1 | 3100 | ug/l | ND | 1.08 | | 1.1 | ND | 1.05 | | 1 | ND | 1.03 | | 1 | ND | 1.03 | | 1 | ND | 1.03 | | 1 | ND | 1.04 | | 1 | ND | 1.06 | | 1.1 |
| 3,3'-DIMETHYLBENZIDINE | 119-93-7 | 280 | ug/l | ND | 1.08 | | 11 | ND | 1.05 | | 10 | ND | 1.03 | | 10 | ND | 1.03 | | 10 | ND | 1.03 | | 10 | ND | 1.04 | | 10 | ND | 1.06 | | 11 |
| 3,5,5-TRIMETHYL-2-CYCLOHEXENE-1-ONE | 78-59-1 | 100000 | ug/l | ND | 1.08 | | 1.1 | ND | 1.05 | | 1 | ND | 1.03 | | 1 | ND | 1.03 | | 1 | ND | 1.03 | | 1 | ND | 1.04 | | 1 | ND | 1.06 | | 1.1 |
| 3-METHYLCHLORANTHRENE | 56-49-5 | NS | ug/l | ND | 1.08 | | 1.1 | ND | 1.05 | | 1 | ND | 1.03 | | 1 | ND | 1.03 | | 1 | ND | 1.03 | | 1 | ND | 1.04 | | 1 | ND | 1.06 | | 1.1 |
| 3-Methylphenol & 4-Methylphenol | 65794-96-9 | NS | ug/l | ND | 1.08 | | 1.1 | ND | 1.05 | | 1 | ND | 1.03 | | 1 | 0.12 | 1.03 | J | 1 | 0.37 | 1.03 | J | 1 | 0.9 | 1.04 | J | 1 | 0.086 | 1.06 | J | 1.1 |
| 3-NITROANILINE | 99-09-2 | 5.8 | ug/l | ND | 1.08 | | 5.4 | ND | 1.05 | | 5.2 | ND | 1.03 | | 5.2 | ND | 1.03 | | 5.2 | 0.56 | 1.03 | J | 5.2 | ND | 1.04 | | 5.2 | ND | 1.06 | | 5.3 |
| 4,6-DINITRO-2-METHYLPHENOL | 534-52-1 | 5 | ug/l | ND | 1.08 | | ***5.4*** | ND | 1.05 | | ***5.2*** | ND | 1.03 | | ***5.2*** | ND | 1.03 | | ***5.2*** | ND | 1.03 | | ***5.2*** | ND | 1.04 | | ***5.2*** | ND | 1.06 | | ***5.3*** |
| 4-AMINOBIPHENYL | 92-67-1 | 120 | ug/l | ND | 1.08 | | 1.1 | ND | 1.05 | | 1 | ND | 1.03 | | 1 | ND | 1.03 | | 1 | ND | 1.03 | | 1 | ND | 1.04 | | 1 | ND | 1.06 | | 1.1 |
| 4-BROMOPHENYL PHENYL ETHER | 101-55-3 | 5 | ug/l | ND | 1.08 | | 1.1 | ND | 1.05 | | 1 | ND | 1.03 | | 1 | ND | 1.03 | | 1 | 0.12 | 1.03 | J | 1 | ND | 1.04 | | 1 | ND | 1.06 | | 1.1 |
| 4-CHLORO-3-METHYLPHENOL | 59-50-7 | 510 | ug/l | ND | 1.08 | | 1.1 | ND | 1.05 | | 1 | ND | 1.03 | | 1 | ND | 1.03 | | 1 | 0.28 | 1.03 | J | 1 | ND | 1.04 | | 1 | ND | 1.06 | | 1.1 |
| 4-CHLOROPHENYL PHENYL ETHER | 7005-72-3 | 5 | ug/l | ND | 1.08 | | 1.1 | ND | 1.05 | | 1 | ND | 1.03 | | 1 | ND | 1.03 | | 1 | 0.079 | 1.03 | J | 1 | ND | 1.04 | | 1 | ND | 1.06 | | 1.1 |
| 4-DIMETHYLAMINOAZOBENZENE | 60-11-7 | 570 | ug/l | ND | 1.08 | | 1.1 | ND | 1.05 | | 1 | ND | 1.03 | | 1 | ND | 1.03 | | 1 | ND | 1.03 | | 1 | ND | 1.04 | | 1 | ND | 1.06 | | 1.1 |
| 4-NITROPHENOL | 100-02-7 | 60000 | ug/l | ND | 1.08 | | 5.4 | ND | 1.05 | | 5.2 | ND | 1.03 | | 5.2 | ND | 1.03 | | 5.2 | 1.8 | 1.03 | J | 5.2 | ND | 1.04 | | 5.2 | ND | 1.06 | | 5.3 |
| 4-NITROQUINOLINE-N-OXIDE | 56-57-5 | 5 | ug/l | ND | 1.08 | | ***11*** | ND | 1.05 | | ***10*** | ND | 1.03 | | ***10*** | ND | 1.03 | | ***10*** | ND | 1.03 | | ***10*** | ND | 1.04 | | ***10*** | ND | 1.06 | | ***11*** |
| 5-NITRO-O-TOLUIDINE | 99-55-8 | NS | ug/l | ND | 1.08 | | 11 | ND | 1.05 | | 10 | ND | 1.03 | | 10 | ND | 1.03 | | 10 | ND | 1.03 | | 10 | ND | 1.04 | | 10 | ND | 1.06 | | 11 |
| 7,12-DIMETHYLBENZ(A)ANTHRACENE | 57-97-6 | NS | ug/l | ND | 1.08 | | 1.1 | ND | 1.05 | | 1 | ND | 1.03 | | 1 | ND | 1.03 | | 1 | ND | 1.03 | | 1 | ND | 1.04 | | 1 | ND | 1.06 | | 1.1 |
| a,a-Dimethylphenethylamine | 122-09-8 | 5 | ug/l | ND | 1.08 | | 1.1 | ND | 1.05 | | 1 | ND | 1.03 | | 1 | ND | 1.03 | | 1 | ND | 1.03 | | 1 | ND | 1.04 | | 1 | ND | 1.06 | | 1.1 |
| ACENAPHTHENE | 83-32-9 | 3800 | ug/l | ND | 1.08 | | 0.22 | ND | 1.05 | | 0.21 | ND | 1.03 | | 0.21 | ND | 1.03 | | 0.21 | 0.082 | 1.03 | J | 0.21 | 0.2 | 1.04 | J | 0.21 | 3.8 | 1.06 | | 0.21 |
| ACENAPHTHYLENE | 208-96-8 | 16000 | ug/l | ND | 1.08 | | 0.22 | ND | 1.05 | | 0.21 | ND | 1.03 | | 0.21 | ND | 1.03 | | 0.21 | 0.06 | 1.03 | J | 0.21 | ND | 1.04 | | 0.21 | 0.099 | 1.06 | J | 0.21 |
| ACETOPHENONE | 98-86-2 | 10000 | ug/l | ND | 1.08 | | 1.1 | ND | 1.05 | | 1 | ND | 1.03 | | 1 | ND | 1.03 | | 1 | ND | 1.03 | | 1 | 0.12 | 1.04 | J | 1 | 0.056 | 1.06 | J | 1.1 |
| ANILINE | 62-53-3 | 5.8 | ug/l | ND | 1.08 | | 1.1 | ND | 1.05 | | 1 | ND | 1.03 | | 1 | ND | 1.03 | | 1 | ND | 1.03 | | 1 | ND | 1.04 | | 1 | 0.45 | 1.06 | J | 1.1 |
| ANTHRACENE | 120-12-7 | 66 | ug/l | ND | 1.08 | | 0.22 | 0.39 | 1.05 | | 0.21 | ND | 1.03 | | 0.21 | ND | 1.03 | | 0.21 | 0.17 | 1.03 | J | 0.21 | ND | 1.04 | | 0.21 | 0.18 | 1.06 | J | 0.21 |
| ARAMITE | 140-57-8 | NS | ug/l | ND | 1.08 | | 1.1 | ND | 1.05 | | 1 | ND | 1.03 | | 1 | ND | 1.03 | | 1 | ND | 1.03 | | 1 | ND | 1.04 | | 1 | ND | 1.06 | | 1.1 |
| BENZO(A)ANTHRACENE | 56-55-3 | 11 | ug/l | ND | 1.08 | | 0.22 | ND | 1.05 | | 0.21 | ND | 1.03 | | 0.21 | ND | 1.03 | | 0.21 | 0.18 | 1.03 | J | 0.21 | ND | 1.04 | | 0.21 | ND | 1.06 | | 0.21 |
| BENZO(A)PYRENE | 50-32-8 | 3.8 | ug/l | ND | 1.08 | | 0.22 | ND | 1.05 | | 0.21 | ND | 1.03 | | 0.21 | ND | 1.03 | | 0.21 | 0.57 | 1.03 | | 0.21 | ND | 1.04 | | 0.21 | ND | 1.06 | | 0.21 |
| BENZO(B)FLUORANTHENE | 205-99-2 | 1.2 | ug/l | ND | 1.08 | | 0.22 | ND | 1.05 | | 0.21 | ND | 1.03 | | 0.21 | ND | 1.03 | | 0.21 | 0.66 | 1.03 | | 0.21 | ND | 1.04 | | 0.21 | ND | 1.06 | | 0.21 |
| BENZO(GHI)PERYLENE | 191-24-2 | 0.26 | ug/l | ND | 1.08 | | 0.22 | ND | 1.05 | | 0.21 | ND | 1.03 | | 0.21 | ND | 1.03 | | 0.21 | **0.64** | 1.03 | | 0.21 | ND | 1.04 | | 0.21 | ND | 1.06 | | 0.21 |
| BENZO(K)FLUORANTHENE | 207-08-9 | 0.55 | ug/l | ND | 1.08 | | 0.22 | ND | 1.05 | | 0.21 | ND | 1.03 | | 0.21 | ND | 1.03 | | 0.21 | **0.76** | 1.03 | | 0.21 | ND | 1.04 | | 0.21 | ND | 1.06 | | 0.21 |
| BENZYL ALCOHOL | 100-51-6 | 31000 | ug/l | ND | 1.08 | | 1.1 | ND | 1.05 | | 1 | ND | 1.03 | | 1 | ND | 1.03 | | 1 | ND | 1.03 | | 1 | ND | 1.04 | | 1 | ND | 1.06 | | 1.1 |
| BENZYL BUTYL PHTHALATE | 85-68-7 | 2700 | ug/l | 0.27 | 1.08 | J | 1.1 | 0.29 | 1.05 | JB | 1 | 0.14 | 1.03 | J | 1 | ND | 1.03 | | 1 | 0.42 | 1.03 | J | 1 | 0.22 | 1.04 | J | 1 | 0.73 | 1.06 | J | 1.1 |
| BIS(2-CHLORO-1-METHYLETHYL) ETHER | 108-60-1 | 30000 | ug/l | ND | 1.08 | | 0.22 | ND | 1.05 | | 0.21 | ND | 1.03 | | 0.21 | ND | 1.03 | | 0.21 | 0.063 | 1.03 | J | 0.21 | ND | 1.04 | | 0.21 | ND | 1.06 | | 0.21 |
| BIS(2-CHLOROETHOXY)METHANE | 111-91-1 | 5 | ug/l | ND | 1.08 | | 1.1 | ND | 1.05 | | 1 | ND | 1.03 | | 1 | ND | 1.03 | | 1 | ND | 1.03 | | 1 | ND | 1.04 | | 1 | ND | 1.06 | | 1.1 |
| BIS(2-CHLOROETHYL) ETHER | 111-44-4 | 55 | ug/l | ND | 1.08 | | 0.22 | ND | 1.05 | | 0.21 | ND | 1.03 | | 0.21 | ND | 1.03 | | 0.21 | ND | 1.03 | | 0.21 | ND | 1.04 | | 0.21 | ND | 1.06 | | 0.21 |
| BIS(2-ETHYLHEXYL)PHTHALATE | 117-81-7 | 290 | ug/l | ND | 1.08 | | 1.1 | ND | 1.05 | | 1 | 0.4 | 1.03 | J | 1 | 0.3 | 1.03 | J | 1 | 0.52 | 1.03 | J | 1 | 7.5 | 1.04 | | 1 | ND | 1.06 | | 1.1 |
| CHLORDECONE (KEPONE) | 143-50-0 | 160 | ug/l | ND | 1.08 | | 4.3 | ND | 1.05 | | 4.2 | ND | 1.03 | | 4.1 | ND | 1.03 | | 4.1 | ND | 1.03 | | 4.1 | ND | 1.04 | | 4.2 | ND | 1.06 | | 4.2 |

**Table 5**
**Summary of Groundwater Analytical Results - October 2008**
**Comparison to Pennsylvania Non-Residential Non-Use Aquifer Groundwater MSCs**
**U.S. Steel - RCRA Groundwater Sampling**
**Fairless Hills, Pennsylvania**

| | CAS No | PADEP Non-Residentail Non-Use Aquifer GW MSC | Location ID | MW1-26-27 | | | | MW1-27-19 | | | | MW1-28-74 | | | | MW2-1-22 | | | | MW2-3-33 | | | | MW3-12-31 | | | | MW3-2-27 | | | |
|---|---|---|---|---|---|---|---|---|---|---|---|---|---|---|---|---|---|---|---|---|---|---|---|---|---|---|---|---|---|---|---|
| | | | Sample ID | MW1-26-27_10-08-N | | | | MW1-27-19_10-08-N | | | | MW1-28-74_10-08-N | | | | MW2-1-22_10-08-N | | | | MW2-3-33_10-08-N | | | | MW3-12-31_10-08-N | | | | MW3-2-27_10-08-N | | | |
| | | | Sample Date | 10/16/2008 | | | | 10/20/2008 | | | | 10/15/2008 | | | | 10/16/2008 | | | | 10/16/2008 | | | | 10/16/2008 | | | | 10/16/2008 | | | |
| | | | Lab Id | C8J180168008 | | | | C8J220361002 | | | | C8J160299017 | | | | C8J180168012 | | | | C8J180168005 | | | | C8J180168013 | | | | C8J180168033 | | | |
| ***RCRA APPENDIX IX SEMI-VOLATILE ORGANIC COMPOUNDS (Method 8270)*** | | | | Result | DF | Q | RL | Result | DF | Q | RL | Result | DF | Q | RL | Result | DF | Q | RL | Result | DF | Q | RL | Result | DF | Q | RL | Result | DF | Q | RL |
| CHLOROBENZILATE | 510-15-6 | 9600 | ug/l | ND | 1.08 | | 1.1 | ND | 1.05 | | 1 | ND | 1.03 | | 1 | ND | 1.03 | | 1 | ND | 1.03 | | 1 | ND | 1.04 | | 1 | ND | 1.06 | | 1.1 |
| CHLOROPHENOLS | 58-90-2 | 61000 | ug/l | ND | 1.08 | | 1.1 | ND | 1.05 | | 1 | ND | 1.03 | | 1 | ND | 1.03 | | 1 | 0.24 | 1.03 | J | 1 | ND | 1.04 | | 1 | ND | 1.06 | | 1.1 |
| CHRYSENE | 218-01-9 | 1.9 | ug/l | ND | 1.08 | | 0.22 | ND | 1.05 | | 0.21 | ND | 1.03 | | 0.21 | ND | 1.03 | | 0.21 | 0.2 | 1.03 | J | 0.21 | ND | 1.04 | | 0.21 | ND | 1.06 | | 0.21 |
| CYGON | 60-51-5 | 20000 | ug/l | ND | 1.08 | | 1.1 | ND | 1.05 | | 1 | ND | 1.03 | | 1 | ND | 1.03 | | 1 | ND | 1.03 | | 1 | ND | 1.04 | | 1 | ND | 1.06 | | 1.1 |
| DIALLATE | 2303-16-4 | 1000 | ug/l | ND | 1.08 | | 1.1 | ND | 1.05 | | 1 | ND | 1.03 | | 1 | ND | 1.03 | | 1 | ND | 1.03 | | 1 | ND | 1.04 | | 1 | ND | 1.06 | | 1.1 |
| DIBENZO(A,H)ANTHRACENE | 53-70-3 | 0.6 | ug/l | ND | 1.08 | | 0.22 | ND | 1.05 | | 0.21 | ND | 1.03 | | 0.21 | ND | 1.03 | | 0.21 | **0.95** | 1.03 | | 0.21 | ND | 1.04 | | 0.21 | ND | 1.06 | | 0.21 |
| DIBENZOFURAN | 132-64-9 | 5 | ug/l | ND | 1.08 | | 1.1 | 0.057 | 1.05 | J | 1 | ND | 1.03 | | 1 | ND | 1.03 | | 1 | 0.12 | 1.03 | J | 1 | 0.13 | 1.04 | J | 1 | 0.06 | 1.06 | J | 1.1 |
| DIETHYL PHTHALATE | 84-66-2 | 1100000 | ug/l | ND | 1.08 | | 1.1 | ND | 1.05 | | 1 | ND | 1.03 | | 1 | ND | 1.03 | | 1 | 0.28 | 1.03 | J | 1 | ND | 1.04 | | 1 | ND | 1.06 | | 1.1 |
| DIMETHYL PHTHALATE | 131-11-3 | 5 | ug/l | ND | 1.08 | | 1.1 | ND | 1.05 | | 1 | 0.13 | 1.03 | J | 1 | ND | 1.03 | | 1 | 0.18 | 1.03 | J | 1 | ND | 1.04 | | 1 | ND | 1.06 | | 1.1 |
| DI-N-BUTYL PHTHALATE | 84-74-2 | 400000 | ug/l | 0.1 | 1.08 | J | 1.1 | 0.32 | 1.05 | JB | 1 | 0.064 | 1.03 | J | 1 | 0.074 | 1.03 | J | 1 | 0.28 | 1.03 | J | 1 | 0.067 | 1.04 | J | 1 | 0.081 | 1.06 | J | 1.1 |
| DINITROBUTYL PHENOL | 88-85-7 | 700 | ug/l | ND | 1.08 | | 1.1 | ND | 1.05 | | 1 | ND | 1.03 | | 1 | ND | 1.03 | | 1 | ND | 1.03 | | 1 | ND | 1.04 | | 1 | ND | 1.06 | | 1.1 |
| DI-N-OCTYL PHTHALATE | 117-84-0 | 3000 | ug/l | ND | 1.08 | | 1.1 | ND | 1.05 | | 1 | 0.46 | 1.03 | J | 1 | ND | 1.03 | | 1 | 0.6 | 1.03 | J | 1 | ND | 1.04 | | 1 | ND | 1.06 | | 1.1 |
| DISULFOTON | 298-04-4 | 30 | ug/l | ND | 1.08 | | 1.1 | ND | 1.05 | | 1 | ND | 1.03 | | 1 | ND | 1.03 | | 1 | ND | 1.03 | | 1 | ND | 1.04 | | 1 | ND | 1.06 | | 1.1 |
| ETHYL METHANESULFONATE | 62-50-0 | 5 | ug/l | ND | 1.08 | | 1.1 | ND | 1.05 | | 1 | ND | 1.03 | | 1 | ND | 1.03 | | 1 | ND | 1.03 | | 1 | ND | 1.04 | | 1 | ND | 1.06 | | 1.1 |
| ETHYL PARATHION (PARATHION) | 56-38-2 | 610 | ug/l | ND | 1.08 | | 1.1 | ND | 1.05 | | 1 | ND | 1.03 | | 1 | ND | 1.03 | | 1 | ND | 1.03 | | 1 | ND | 1.04 | | 1 | ND | 1.06 | | 1.1 |
| FAMPHUR | 52-85-7 | 5 | ug/l | 3.5 | 1.08 | J | ***11*** | ND | 1.05 | | ***10*** | ND | 1.03 | | ***10*** | ND | 1.03 | | ***10*** | ND | 1.03 | | ***10*** | ND | 1.04 | | ***10*** | ND | 1.06 | | ***11*** |
| FLUORANTHENE | 206-44-0 | 260 | ug/l | ND | 1.08 | | 0.22 | 0.47 | 1.05 | | 0.21 | ND | 1.03 | | 0.21 | 0.39 | 1.03 | | 0.21 | 0.52 | 1.03 | | 0.21 | 0.48 | 1.04 | | 0.21 | 0.5 | 1.06 | | 0.21 |
| FLUORENE | 86-73-7 | 1900 | ug/l | ND | 1.08 | | 0.22 | 0.42 | 1.05 | | 0.21 | ND | 1.03 | | 0.21 | ND | 1.03 | | 0.21 | 0.11 | 1.03 | J | 0.21 | 0.11 | 1.04 | J | 0.21 | 0.12 | 1.06 | J | 0.21 |
| HEXACHLORO-1,3-BUTADIENE | 87-68-3 | 1000 | ug/l | ND | 1.08 | | 0.22 | ND | 1.05 | | 0.21 | ND | 1.03 | | 0.21 | ND | 1.03 | | 0.21 | ND | 1.03 | | 0.21 | ND | 1.04 | | 0.21 | ND | 1.06 | | 0.21 |
| HEXACHLOROBENZENE | 118-74-1 | 6 | ug/l | ND | 1.08 | | 0.22 | ND | 1.05 | | 0.21 | ND | 1.03 | | 0.21 | ND | 1.03 | | 0.21 | ND | 1.03 | | 0.21 | ND | 1.04 | | 0.21 | ND | 1.06 | | 0.21 |
| HEXACHLOROCYCLOPENTADIENE | 77-47-4 | 1800 | ug/l | ND | 1.08 | | 1.1 | ND | 1.05 | | 1 | ND | 1.03 | | 1 | ND | 1.03 | | 1 | ND | 1.03 | | 1 | ND | 1.04 | | 1 | ND | 1.06 | | 1.1 |
| HEXACHLOROETHANE | 67-72-1 | 100 | ug/l | ND | 1.08 | | 1.1 | ND | 1.05 | | 1 | ND | 1.03 | | 1 | ND | 1.03 | | 1 | ND | 1.03 | | 1 | ND | 1.04 | | 1 | ND | 1.06 | | 1.1 |
| HEXACHLOROPHENE (HCP) | 70-30-4 | NS | ug/l | ND | - | | 0 | ND | - | | 0 | ND | - | | 0 | ND | - | | 0 | ND | - | | 0 | ND | - | | 0 | ND | - | | 0 |
| HEXACHLOROPROPENE | 1888-71-7 | 5 | ug/l | ND | 1.08 | | 1.1 | ND | 1.05 | | 1 | ND | 1.03 | | 1 | ND | 1.03 | | 1 | ND | 1.03 | | 1 | ND | 1.04 | | 1 | ND | 1.06 | | 1.1 |
| INDENO(1,2,3-CD)PYRENE | 193-39-5 | 62 | ug/l | ND | 1.08 | | 0.22 | ND | 1.05 | | 0.21 | ND | 1.03 | | 0.21 | ND | 1.03 | | 0.21 | 0.9 | 1.03 | | 0.21 | ND | 1.04 | | 0.21 | ND | 1.06 | | 0.21 |
| ISODRIN | 465-73-6 | 5 | ug/l | ND | 1.08 | | 1.1 | ND | 1.05 | | 1 | ND | 1.03 | | 1 | ND | 1.03 | | 1 | ND | 1.03 | | 1 | ND | 1.04 | | 1 | ND | 1.06 | | 1.1 |
| ISOSAFROLE | 120-58-1 | 5 | ug/l | ND | 1.08 | | 1.1 | ND | 1.05 | | 1 | ND | 1.03 | | 1 | ND | 1.03 | | 1 | ND | 1.03 | | 1 | ND | 1.04 | | 1 | ND | 1.06 | | 1.1 |
| M-DICHLOROBENZENE | 541-73-1 | 60000 | ug/l | ND | 1.08 | | 0.22 | ND | 1.05 | | 0.21 | ND | 1.03 | | 0.21 | ND | 1.03 | | 0.21 | ND | 1.03 | | 0.21 | ND | 1.04 | | 0.21 | ND | 1.06 | | 0.21 |
| M-DINITROBENZENE | 99-65-0 | 1000 | ug/l | ND | 1.08 | | 1.1 | ND | 1.05 | | 1 | ND | 1.03 | | 1 | ND | 1.03 | | 1 | ND | 1.03 | | 1 | ND | 1.04 | | 1 | ND | 1.06 | | 1.1 |
| METHANAMINE, N-METHYL-N-NITROSO | 62-75-9 | 0.13 | ug/l | ND | 1.08 | | ***1.1*** | ND | 1.05 | | ***1*** | ND | 1.03 | | ***1*** | ND | 1.03 | | ***1*** | ND | 1.03 | | ***1*** | ND | 1.04 | | ***1*** | ND | 1.06 | | ***1.1*** |
| METHAPYRILENE | 91-80-5 | NS | ug/l | ND | 1.08 | | 1.1 | ND | 1.05 | | 1 | ND | 1.03 | | 1 | ND | 1.03 | | 1 | ND | 1.03 | | 1 | ND | 1.04 | | 1 | ND | 1.06 | | 1.1 |
| METHYL METHANESULFONATE | 66-27-3 | 26 | ug/l | ND | 1.08 | | 1.1 | ND | 1.05 | | 1 | ND | 1.03 | | 1 | ND | 1.03 | | 1 | ND | 1.03 | | 1 | ND | 1.04 | | 1 | ND | 1.06 | | 1.1 |
| METHYL PARATHION | 298-00-0 | 200 | ug/l | ND | 1.08 | | 1.1 | ND | 1.05 | | 1 | ND | 1.03 | | 1 | ND | 1.03 | | 1 | ND | 1.03 | | 1 | ND | 1.04 | | 1 | ND | 1.06 | | 1.1 |
| NAPHTHALENE | 91-20-3 | 30000 | ug/l | 0.1 | 1.08 | J | 0.22 | 0.067 | 1.05 | J | 0.21 | 0.28 | 1.03 | | 0.21 | ND | 1.03 | | 0.21 | 0.11 | 1.03 | J | 0.21 | 0.55 | 1.04 | | 0.21 | 0.27 | 1.06 | | 0.21 |
| NITROBENZENE | 98-95-3 | 51000 | ug/l | ND | 1.08 | | 0.22 | ND | 1.05 | | 0.21 | ND | 1.03 | | 0.21 | ND | 1.03 | | 0.21 | ND | 1.03 | | 0.21 | 0.17 | 1.04 | J | 0.21 | ND | 1.06 | | 0.21 |
| N-NITROSODIETHYLAMINE | 55-18-5 | 0.043 | ug/l | ND | 1.08 | | ***1.1*** | ND | 1.05 | | ***1*** | ND | 1.03 | | ***1*** | ND | 1.03 | | ***1*** | ND | 1.03 | | ***1*** | ND | 1.04 | | ***1*** | ND | 1.06 | | ***1.1*** |
| N-NITROSODI-N-BUTYLAMINE | 924-16-3 | 11 | ug/l | ND | 1.08 | | 1.1 | ND | 1.05 | | 1 | ND | 1.03 | | 1 | ND | 1.03 | | 1 | ND | 1.03 | | 1 | ND | 1.04 | | 1 | ND | 1.06 | | 1.1 |
| N-NITROSODI-N-PROPYLAMINE | 621-64-7 | 370 | ug/l | ND | 1.08 | | 0.22 | ND | 1.05 | | 0.21 | ND | 1.03 | | 0.21 | ND | 1.03 | | 0.21 | ND | 1.03 | | 0.21 | ND | 1.04 | | 0.21 | ND | 1.06 | | 0.21 |
| N-NITROSODIPHENYLAMINE | 86-30-6 | 35000 | ug/l | ND | 1.08 | | 0.22 | ND | 1.05 | | 0.21 | ND | 1.03 | | 0.21 | ND | 1.03 | | 0.21 | 0.2 | 1.03 | J | 0.21 | ND | 1.04 | | 0.21 | ND | 1.06 | | 0.21 |
| N-NITROSOMETHYLETHYLAMINE | 10595-95-6 | NS | ug/l | ND | 1.08 | | 1.1 | ND | 1.05 | | 1 | ND | 1.03 | | 1 | ND | 1.03 | | 1 | ND | 1.03 | | 1 | ND | 1.04 | | 1 | ND | 1.06 | | 1.1 |
| N-NITROSOMORPHOLINE | 59-89-2 | NS | ug/l | ND | 1.08 | | 1.1 | ND | 1.05 | | 1 | ND | 1.03 | | 1 | ND | 1.03 | | 1 | ND | 1.03 | | 1 | ND | 1.04 | | 1 | ND | 1.06 | | 1.1 |
| N-NITROSOPIPERIDINE | 100-75-4 | NS | ug/l | ND | 1.08 | | 1.1 | ND | 1.05 | | 1 | ND | 1.03 | | 1 | ND | 1.03 | | 1 | ND | 1.03 | | 1 | ND | 1.04 | | 1 | ND | 1.06 | | 1.1 |
| N-NITROSOPYRROLIDINE | 930-55-2 | NS | ug/l | ND | 1.08 | | 1.1 | ND | 1.05 | | 1 | ND | 1.03 | | 1 | ND | 1.03 | | 1 | ND | 1.03 | | 1 | ND | 1.04 | | 1 | ND | 1.06 | | 1.1 |
| O,O,O-TRIETHYL PHOSPHOROTHIOATE | 126-68-1 | 5 | ug/l | ND | 1.08 | | 1.1 | ND | 1.05 | | 1 | ND | 1.03 | | 1 | ND | 1.03 | | 1 | ND | 1.03 | | 1 | ND | 1.04 | | 1 | ND | 1.06 | | 1.1 |
| O,O-DIETHYL O-PYRAZINYL PHOSPHOROTHIOATE | 297-97-2 | 5 | ug/l | ND | 1.08 | | 1.1 | ND | 1.05 | | 1 | ND | 1.03 | | 1 | ND | 1.03 | | 1 | ND | 1.03 | | 1 | ND | 1.04 | | 1 | ND | 1.06 | | 1.1 |
| O-TOLUIDINE | 95-53-4 | 11000 | ug/l | ND | 1.08 | | 1.1 | ND | 1.05 | | 1 | ND | 1.03 | | 1 | ND | 1.03 | | 1 | ND | 1.03 | | 1 | ND | 1.04 | | 1 | 2.8 | 1.06 | | 1.1 |
| P-CHLOROANILINE | 106-47-8 | 410 | ug/l | ND | 1.08 | | 1.1 | ND | 1.05 | | 1 | ND | 1.03 | | 1 | ND | 1.03 | | 1 | 0.68 | 1.03 | J | 1 | ND | 1.04 | | 1 | ND | 1.06 | | 1.1 |
| PENTACHLOROBENZENE | 608-93-5 | 740 | ug/l | ND | 1.08 | | 1.1 | ND | 1.05 | | 1 | ND | 1.03 | | 1 | ND | 1.03 | | 1 | ND | 1.03 | | 1 | ND | 1.04 | | 1 | ND | 1.06 | | 1.1 |
| PENTACHLORONITROBENZENE | 82-68-8 | 440 | ug/l | ND | 1.08 | | 1.1 | ND | 1.05 | | 1 | ND | 1.03 | | 1 | ND | 1.03 | | 1 | ND | 1.03 | | 1 | ND | 1.04 | | 1 | ND | 1.06 | | 1.1 |
| PENTACHLOROPHENOL | 87-86-5 | 1000 | ug/l | ND | 1.08 | | 1.1 | ND | 1.05 | | 1 | ND | 1.03 | | 1 | ND | 1.03 | | 1 | 0.63 | 1.03 | J | 1 | 1.2 | 1.04 | | 1 | ND | 1.06 | | 1.1 |
| PHENACETIN | 62-44-2 | 760000 | ug/l | ND | 1.08 | | 1.1 | ND | 1.05 | | 1 | ND | 1.03 | | 1 | ND | 1.03 | | 1 | ND | 1.03 | | 1 | ND | 1.04 | | 1 | ND | 1.06 | | 1.1 |
| PHENANTHRENE | 85-01-8 | 1100 | ug/l | 0.16 | 1.08 | JB | 0.22 | 0.095 | 1.05 | J | 0.21 | 0.1 | 1.03 | JB | 0.21 | 0.14 | 1.03 | JB | 0.21 | 0.29 | 1.03 | B | 0.21 | 0.43 | 1.04 | B | 0.21 | 0.58 | 1.06 | B | 0.21 |
| PHENOL | 108-95-2 | 400000 | ug/l | ND | 1.08 | | 0.22 | ND | 1.05 | | 0.21 | 0.15 | 1.03 | J | 0.21 | ND | 1.03 | | 0.21 | 0.21 | 1.03 | | 0.21 | 0.22 | 1.04 | | 0.21 | ND | 1.06 | | 0.21 |
| PHORATE | 298-02-2 | 4.1 | ug/l | ND | 1.08 | | 1.1 | ND | 1.05 | | 1 | ND | 1.03 | | 1 | ND | 1.03 | | 1 | ND | 1.03 | | 1 | ND | 1.04 | | 1 | ND | 1.06 | | 1.1 |
| P-NITROANILINE | 100-01-6 | 5.8 | ug/l | ND | 1.08 | | 5.4 | ND | 1.05 | | 5.2 | ND | 1.03 | | 5.2 | ND | 1.03 | | 5.2 | 0.4 | 1.03 | J | 5.2 | ND | 1.04 | | 5.2 | ND | 1.06 | | 5.3 |
| P-PHENYLENEDIAMINE | 106-50-3 | NS | ug/l | ND | 1.08 | | 43 | ND | 1.05 | | 42 | ND | 1.03 | | 41 | ND | 1.03 | | 41 | ND | 1.03 | | 41 | ND | 1.04 | | 42 | ND | 1.06 | | 42 |
| PROPYZAMIDE | 23950-58-5 | 50 | ug/l | ND | 1.08 | | 1.1 | ND | 1.05 | | 1 | ND | 1.03 | | 1 | ND | 1.03 | | 1 | ND | 1.03 | | 1 | ND | 1.04 | | 1 | ND | 1.06 | | 1.1 |
| PYRENE | 129-00-0 | 130 | ug/l | ND | 1.08 | | 0.22 | 0.14 | 1.05 | J | 0.21 | ND | 1.03 | | 0.21 | ND | 1.03 | | 0.21 | 0.22 | 1.03 | | 0.21 | 0.12 | 1.04 | J | 0.21 | 0.53 | 1.06 | | 0.21 |
| PYRIDINE | 110-86-1 | 200 | ug/l | ND | 1.08 | | 1.1 | ND | 1.05 | | 1 | ND | 1.03 | | 1 | ND | 1.03 | | 1 | ND | 1.03 | | 1 | 0.37 | 1.04 | J | 1 | ND | 1.06 | | 1.1 |
| SAFROLE | 94-59-7 | NS | ug/l | ND | 1.08 | | 1.1 | ND | 1.05 | | 1 | ND | 1.03 | | 1 | ND | 1.03 | | 1 | ND | 1.03 | | 1 | ND | 1.04 | | 1 | ND | 1.06 | | 1.1 |
| SULFOTEP | 3689-24-5 | 10 | ug/l | ND | 1.08 | | 1.1 | ND | 1.05 | | 1 | ND | 1.03 | | 1 | ND | 1.03 | | 1 | ND | 1.03 | | 1 | ND | 1.04 | | 1 | ND | 1.06 | | 1.1 |
| ***RCRA APPENDIX IX METALS - Dissolved (Method 6010/7471)*** | | | | Result | DF | Q | RL | Result | DF | Q | RL | Result | DF | Q | RL | Result | DF | Q | RL | Result | DF | Q | RL | Result | DF | Q | RL | Result | DF | Q | RL |
| ANTIMONY | 7440-36-0 | 6000 | ug/l | 0.15 | 1 | JB | 2 | 0.22 | 1 | B | 2 | 0.2 | 1 | B | 2 | 0.37 | 1 | JB | 2 | 0.26 | 1 | JB | 2 | 0.14 | 1 | JB | 2 | 0.11 | 1 | JB | 2 |
| ARSENIC | 7440-38-2 | 50000 | ug/l | 0.87 | 1 | B | 1 | 0.8 | 1 | B | 1 | 0.38 | 1 | JB | 1 | 1.3 | 1 | | 1 | 0.35 | 1 | B | 1 | 0.46 | 1 | B | 1 | 15.8 | 1 | | 1 |
| BARIUM | 7440-39-3 | 2000000 | ug/l | 10.5 | 1 | | 10 | 105 | 1 | | 10 | 3.1 | 1 | B | 10 | 36.3 | 1 | | 10 | 20.3 | 1 | | 10 | 17.4 | 1 | | 10 | 111 | 1 | | 10 |
| BERYLLIUM | 7440-41-7 | 4000 | ug/l | ND | 1 | | 1 | ND | 1 | | 1 | ND | 1 | | 1 | ND | 1 | | 1 | ND | 1 | | 1 | ND | 1 | | 1 | ND | 1 | | 1 |
| CADMIUM | 7440-43-9 | 5000 | ug/l | 0.16 | 1 | JB | 1 | ND | 1 | | 1 | ND | 1 | | 1 | ND | 1 | | 1 | 0.45 | 1 | JB | 1 | 0.21 | 1 | JB | 1 | ND | 1 | | 1 |
| CHROMIUM | 7440-47-3 | 100000 | ug/l | 2.9 | 1 | J | 2 | 5.8 | 1 | J | 2 | 5.1 | 1 | J | 2 | 4.9 | 1 | J | 2 | 3.7 | 1 | J | 2 | 4 | 1 | J | 2 | 3.3 | 1 | J | 2 |
| COBALT | 7440-48-4 | 2000000 | ug/l | 0.69 | 1 | | 0.5 | 0.42 | 1 | B | 0.5 | 3.6 | 1 | | 0.5 | 0.19 | 1 | B | 0.5 | 1.2 | 1 | | 0.5 | 0.28 | 1 | B | 0.5 | 0.8 | 1 | | 0.5 |
| COPPER | 7440-50-8 | 1000000 | ug/l | 1.1 | 1 | B | 2 | 0.52 | 1 | B | 2 | 1.5 | 1 | B | 2 | 1.2 | 1 | B | 2 | 1.9 | 1 | B | 2 | 3.6 | 1 | | 2 | 0.4 | 1 | B | 2 |
| LEAD | 7439-92-1 | 5000 | ug/l | 0.15 | 1 | B | 1 | 0.025 | 1 | B | 1 | ND | 1 | | 1 | 0.22 | 1 | B | 1 | 0.66 | 1 | B | 1 | 0.4 | 1 | B | 1 | 0.43 | 1 | B | 1 |
| MERCURY | 7439-97-6 | 2000 | ug/l | 0.032 | 1 | JB | 0.2 | ND | 1 | | 0.2 | 0.043 | 1 | JB | 0.2 | 0.036 | 1 | JB | 0.2 | 0.038 | 1 | JB | 0.2 | 0.067 | 1 | JB | 0.2 | 0.037 | 1 | JB | 0.2 |
| NICKEL | 7440-02-0 | 100000 | ug/l | 2.6 | 1 | | 1 | 1.2 | 1 | | 1 | 11.2 | 1 | | 1 | 0.71 | 1 | B | 1 | 4.1 | 1 | | 1 | 6.6 | 1 | | 1 | 2.6 | 1 | | 1 |
| SELENIUM | 7782-49-2 | 50000 | ug/l | ND | 1 | | 5 | 0.56 | 1 | B | 5 | 1.1 | 1 | JB | 5 | 6.3 | 1 | | 5 | 0.94 | 1 | B | 5 | ND | 1 | | 5 | 0.77 | 1 | B | 5 |
| SILVER | 7440-22-4 | 100000 | ug/l | ND | 1 | | 1 | ND | 1 | | 1 | ND | 1 | | 1 | ND | 1 | | 1 | ND | 1 | | 1 | ND | 1 | | 1 | ND | 1 | | 1 |
| THALLIUM | 7440-28-0 | 2000 | ug/l | 0.029 | 1 | JB | 1 | 0.081 | 1 | B | 1 | 0.072 | 1 | B | 1 | ND | 1 | | 1 | 0.038 | 1 | JB | 1 | ND | 1 | | 1 | ND | 1 | | 1 |
| TIN | 7440-31-5 | 61000000 | ug/l | 3.9 | 1 | JB | 5 | 5.9 | 1 | J | 5 | 3.9 | 1 | JB | 5 | 5.3 | 1 | J | 5 | 5.2 | 1 | J | 5 | 4.9 | 1 | JB | 5 | 4.5 | 1 | JB | 5 |
| VANADIUM (FUME OR DUST) | 7440-62-2 | 720000 | ug/l | ND | 1 | | 1 | 0.74 | 1 | B | 1 | ND | 1 | | 1 | 1.4 | 1 | | 1 | ND | 1 | | 1 | 1.8 | 1 | | 1 | 1.5 | 1 | | 1 |
| ZINC | 7440-66-6 | 2000000 | ug/l | 5.6 | 1 | | 5 | 5.2 | 1 | J | 5 | 8.6 | 1 | | 5 | 7.1 | 1 | | 5 | 13.2 | 1 | | 5 | 14.8 | 1 | | 5 | 6.7 | 1 | | 5 |

**Table 5**
**Summary of Groundwater Analytical Results - October 2008**
**Comparison to Pennsylvania Non-Residential Non-Use Aquifer Groundwater MSCs**
**U.S. Steel - RCRA Groundwater Sampling**
**Fairless Hills, Pennsylvania**

| | CAS No | PADEP Non-Residentail Non-Use Aquifer GW MSC | Location ID | MW3-29-29 | | | | MW3-34-28 | | | | MW3-41-29 | | | | MW4-10-23 | | | | MW4-11-33 | | | | MW4-14-36 | | | | MW4-2-24 | | | |
|---|---|---|---|---|---|---|---|---|---|---|---|---|---|---|---|---|---|---|---|---|---|---|---|---|---|---|---|---|---|---|---|
| | | | Sample ID | MW3-29-29_10-08-N | | | | MW3-34-28_10-08-N | | | | MW3-41-29_10-08-N | | | | MW4-10-23_10-08-N | | | | MW4-11-33_10-08-N | | | | MW4-14-36_10-08-N | | | | MW4-2-24_10-08-N | | | |
| | | | Sample Date | 10/16/2008 | | | | 10/16/2008 | | | | 10/16/2008 | | | | 10/17/2008 | | | | 10/15/2008 | | | | 10/17/2008 | | | | 10/16/2008 | | | |
| | | | Lab Id | C8J180168015 | | | | C8J180168016 | | | | C8J180168014 | | | | C8J180168022 | | | | C8J180168003 | | | | C8J180168019 | | | | C8J180168011 | | | |
| ***RCRA APPENDIX IX VOLATILE ORGANIC COMPOUNDS (Method 8260)*** | | | | Result | DF | Q | RL | Result | DF | Q | RL | Result | DF | Q | RL | Result | DF | Q | RL | Result | DF | Q | RL | Result | DF | Q | RL | Result | DF | Q | RL |
| 1,1,1,2-TETRACHLOROETHANE | 630-20-6 | 7000 | ug/l | ND | 1 | | 1 | ND | 1 | | 1 | ND | 1 | | 1 | ND | 1 | | 1 | ND | 1 | | 1 | ND | 1 | | 1 | ND | 1 | | 1 |
| 1,1,1-TRICHLOROETHANE | 71-55-6 | 2000 | ug/l | ND | 1 | | 1 | ND | 1 | | 1 | ND | 1 | | 1 | ND | 1 | | 1 | ND | 1 | | 1 | ND | 1 | | 1 | ND | 1 | | 1 |
| 1,1,2,2-TETRACHLOROETHANE | 79-34-5 | 30 | ug/l | ND | 1 | | 1 | ND | 1 | | 1 | ND | 1 | | 1 | ND | 1 | | 1 | ND | 1 | | 1 | ND | 1 | | 1 | ND | 1 | | 1 |
| 1,1,2-TRICHLOROETHANE | 79-00-5 | 50 | ug/l | ND | 1 | | 1 | ND | 1 | | 1 | ND | 1 | | 1 | ND | 1 | | 1 | ND | 1 | | 1 | ND | 1 | | 1 | ND | 1 | | 1 |
| 1,1-DICHLOROETHANE | 75-34-3 | 1100 | ug/l | ND | 1 | | 1 | ND | 1 | | 1 | ND | 1 | | 1 | ND | 1 | | 1 | 2.6 | 1 | | 1 | ND | 1 | | 1 | ND | 1 | | 1 |
| 1,1-DICHLOROETHYLENE | 75-35-4 | 70 | ug/l | ND | 1 | | 1 | ND | 1 | | 1 | ND | 1 | | 1 | ND | 1 | | 1 | 0.39 | 1 | J | 1 | ND | 1 | | 1 | ND | 1 | | 1 |
| 1,2,3-TRICHLOROPROPANE | 96-18-4 | 4000 | ug/l | ND | 1 | | 1 | ND | 1 | | 1 | ND | 1 | | 1 | ND | 1 | | 1 | ND | 1 | | 1 | ND | 1 | | 1 | ND | 1 | | 1 |
| 1,2-DIBROMO-3-CHLOROPROPANE (DBCP) | 96-12-8 | 20 | ug/l | ND | 1 | | 1 | ND | 1 | | 1 | ND | 1 | | 1 | ND | 1 | | 1 | ND | 1 | | 1 | ND | 1 | | 1 | ND | 1 | | 1 |
| 1,2-DIBROMOETHANE | 106-93-4 | 5 | ug/l | ND | 1 | | 1 | ND | 1 | | 1 | ND | 1 | | 1 | ND | 1 | | 1 | ND | 1 | | 1 | ND | 1 | | 1 | ND | 1 | | 1 |
| 1,2-DICHLOROETHANE | 107-06-2 | 50 | ug/l | ND | 1 | | 1 | ND | 1 | | 1 | ND | 1 | | 1 | ND | 1 | | 1 | ND | 1 | | 1 | ND | 1 | | 1 | ND | 1 | | 1 |
| 1,2-DICHLOROPROPANE | 78-87-5 | 50 | ug/l | ND | 1 | | 1 | ND | 1 | | 1 | ND | 1 | | 1 | ND | 1 | | 1 | ND | 1 | | 1 | ND | 1 | | 1 | ND | 1 | | 1 |
| 1,4-DIOXANE | 123-91-1 | 240 | ug/l | ND | 1 | | 200 | ND | 1 | | 200 | ND | 1 | | 200 | ND | 1 | | 200 | ND | 1 | | 200 | ND | 1 | | 200 | ND | 1 | | 200 |
| 2-BUTANONE (MEK) | 78-93-3 | 580000 | ug/l | ND | 1 | | 5 | ND | 1 | | 5 | ND | 1 | | 5 | ND | 1 | | 5 | ND | 1 | | 5 | ND | 1 | | 5 | ND | 1 | | 5 |
| 2-CHLOR-1,3-BUTADIENE | 126-99-8 | 4100 | ug/l | ND | 1 | | 1 | ND | 1 | | 1 | ND | 1 | | 1 | ND | 1 | | 1 | ND | 1 | | 1 | ND | 1 | | 1 | ND | 1 | | 1 |
| 2-METHYL-1-PROPANOL | 78-83-1 | 610000 | ug/l | ND | 1 | | 40 | ND | 1 | | 40 | ND | 1 | | 40 | ND | 1 | | 40 | ND | 1 | | 40 | ND | 1 | | 40 | ND | 1 | | 40 |
| 4-METHYL-2-PENTANONE (MIBK) | 108-10-1 | 41000 | ug/l | ND | 1 | | 5 | ND | 1 | | 5 | ND | 1 | | 5 | ND | 1 | | 5 | ND | 1 | | 5 | ND | 1 | | 5 | ND | 1 | | 5 |
| ACETONE | 67-64-1 | 100000 | ug/l | ND | 1 | | 5 | ND | 1 | | 5 | ND | 1 | | 5 | 3 | 1 | J | 5 | ND | 1 | | 5 | 3.5 | 1 | J | 5 | 3.3 | 1 | J | 5 |
| ACETONITRILE | 75-05-8 | 3500 | ug/l | ND | 1 | | 20 | ND | 1 | | 20 | ND | 1 | | 20 | ND | 1 | | 20 | ND | 1 | | 20 | ND | 1 | | 20 | ND | 1 | | 20 |
| ACROLEIN | 107-02-8 | 1.2 | ug/l | ND | 1 | | ***20*** | ND | 1 | | ***20*** | ND | 1 | | ***20*** | ND | 1 | | ***20*** | ND | 1 | | ***20*** | ND | 1 | | ***20*** | ND | 1 | | ***20*** |
| ACRYLONITRILE | 107-13-1 | 270 | ug/l | ND | 1 | | 20 | ND | 1 | | 20 | ND | 1 | | 20 | ND | 1 | | 20 | ND | 1 | | 20 | ND | 1 | | 20 | ND | 1 | | 20 |
| ALLYLCHLORIDE | 107-05-1 | 580 | ug/l | ND | 1 | | 1 | ND | 1 | | 1 | ND | 1 | | 1 | ND | 1 | | 1 | ND | 1 | | 1 | ND | 1 | | 1 | ND | 1 | | 1 |
| BENZENE | 71-43-2 | 500 | ug/l | ND | 1 | | 1 | ND | 1 | | 1 | ND | 1 | | 1 | ND | 1 | | 1 | ND | 1 | | 1 | ND | 1 | | 1 | ND | 1 | | 1 |
| BROMODICHLOROMETHANE | 75-27-4 | 100 | ug/l | ND | 1 | | 1 | ND | 1 | | 1 | ND | 1 | | 1 | ND | 1 | | 1 | ND | 1 | | 1 | ND | 1 | | 1 | ND | 1 | | 1 |
| BROMOMETHANE | 74-83-9 | 1000 | ug/l | ND | 1 | | 1 | ND | 1 | | 1 | ND | 1 | | 1 | ND | 1 | | 1 | ND | 1 | | 1 | ND | 1 | | 1 | ND | 1 | | 1 |
| CARBON DISULFIDE | 75-15-0 | 4100 | ug/l | ND | 1 | | 1 | ND | 1 | | 1 | ND | 1 | | 1 | ND | 1 | | 1 | ND | 1 | | 1 | ND | 1 | | 1 | ND | 1 | | 1 |
| CARBON TETRACHLORIDE | 56-23-5 | 50 | ug/l | ND | 1 | | 1 | ND | 1 | | 1 | ND | 1 | | 1 | ND | 1 | | 1 | ND | 1 | | 1 | ND | 1 | | 1 | ND | 1 | | 1 |
| CFC-11 | 75-69-4 | 200000 | ug/l | ND | 1 | | 1 | ND | 1 | | 1 | ND | 1 | | 1 | ND | 1 | | 1 | ND | 1 | | 1 | ND | 1 | | 1 | ND | 1 | | 1 |
| CFC-12 | 75-71-8 | 100000 | ug/l | ND | 1 | | 1 | ND | 1 | | 1 | ND | 1 | | 1 | ND | 1 | | 1 | 1.4 | 1 | | 1 | ND | 1 | | 1 | ND | 1 | | 1 |
| CHLOROBENZENE | 108-90-7 | 10000 | ug/l | ND | 1 | | 1 | ND | 1 | | 1 | ND | 1 | | 1 | ND | 1 | | 1 | ND | 1 | | 1 | ND | 1 | | 1 | ND | 1 | | 1 |
| CHLORODIBROMOMETHANE | 124-48-1 | 10000 | ug/l | ND | 1 | | 1 | ND | 1 | | 1 | ND | 1 | | 1 | ND | 1 | | 1 | ND | 1 | | 1 | ND | 1 | | 1 | ND | 1 | | 1 |
| CHLOROETHANE | 75-00-3 | 90000 | ug/l | ND | 1 | | 1 | ND | 1 | | 1 | ND | 1 | | 1 | ND | 1 | | 1 | ND | 1 | | 1 | ND | 1 | | 1 | ND | 1 | | 1 |
| CHLOROFORM | 67-66-3 | 1000 | ug/l | ND | 1 | | 1 | ND | 1 | | 1 | ND | 1 | | 1 | ND | 1 | | 1 | ND | 1 | | 1 | ND | 1 | | 1 | ND | 1 | | 1 |
| CHLOROMETHANE | 74-87-3 | 300 | ug/l | ND | 1 | | 1 | ND | 1 | | 1 | ND | 1 | | 1 | ND | 1 | | 1 | ND | 1 | | 1 | ND | 1 | | 1 | ND | 1 | | 1 |
| CIS-1,3-DICHLOROPROPENE | 10061-01-5 | NS | ug/l | ND | 1 | | 1 | ND | 1 | | 1 | ND | 1 | | 1 | ND | 1 | | 1 | ND | 1 | | 1 | ND | 1 | | 1 | ND | 1 | | 1 |
| DIBROMOMETHANE | 74-95-3 | 20000 | ug/l | ND | 1 | | 1 | ND | 1 | | 1 | ND | 1 | | 1 | ND | 1 | | 1 | ND | 1 | | 1 | ND | 1 | | 1 | ND | 1 | | 1 |
| DICHLOROMETHANE | 75-09-2 | 500 | ug/l | ND | 1 | | 1 | ND | 1 | | 1 | ND | 1 | | 1 | ND | 1 | | 1 | ND | 1 | | 1 | ND | 1 | | 1 | ND | 1 | | 1 |
| ETHYL METHACRYLATE | 97-63-2 | 1800 | ug/l | ND | 1 | | 1 | ND | 1 | | 1 | ND | 1 | | 1 | ND | 1 | | 1 | ND | 1 | | 1 | ND | 1 | | 1 | ND | 1 | | 1 |
| ETHYLBENZENE | 100-41-4 | 70000 | ug/l | ND | 1 | | 1 | ND | 1 | | 1 | ND | 1 | | 1 | ND | 1 | | 1 | ND | 1 | | 1 | ND | 1 | | 1 | ND | 1 | | 1 |
| IODOMETHANE | 74-88-4 | 5 | ug/l | ND | 1 | | 1 | ND | 1 | | 1 | ND | 1 | | 1 | ND | 1 | | 1 | ND | 1 | | 1 | ND | 1 | | 1 | ND | 1 | | 1 |
| METHYL METHACRYLATE | 80-62-6 | 410000 | ug/l | ND | 1 | | 1 | ND | 1 | | 1 | ND | 1 | | 1 | ND | 1 | | 1 | ND | 1 | | 1 | ND | 1 | | 1 | ND | 1 | | 1 |
| METHYL N-BUTYL KETONE | 591-78-6 | 5 | ug/l | ND | 1 | | 5 | ND | 1 | | 5 | ND | 1 | | 5 | ND | 1 | | 5 | ND | 1 | | 5 | ND | 1 | | 5 | ND | 1 | | 5 |
| METHYLACRYLONITRILE | 126-98-7 | 4.1 | ug/l | ND | 1 | | 1 | ND | 1 | | 1 | ND | 1 | | 1 | ND | 1 | | 1 | ND | 1 | | 1 | ND | 1 | | 1 | ND | 1 | | 1 |
| PENTACHLOROETHANE | 76-01-7 | 5 | ug/l | ND | 1.06 | | 2.1 | ND | 1.08 | | 2.2 | ND | 1.05 | | 2.1 | ND | 1.06 | | 2.1 | ND | 1.02 | | 2 | ND | 1.04 | | 2.1 | ND | 1.05 | | 2.1 |
| PROPIONITRILE | 107-12-0 | 5 | ug/l | ND | 1 | | 2 | ND | 1 | | 2 | ND | 1 | | 2 | ND | 1 | | 2 | ND | 1 | | 2 | ND | 1 | | 2 | ND | 1 | | 2 |
| STYRENE (MONOMER) | 100-42-5 | 10000 | ug/l | ND | 1 | | 1 | ND | 1 | | 1 | ND | 1 | | 1 | ND | 1 | | 1 | ND | 1 | | 1 | ND | 1 | | 1 | ND | 1 | | 1 |
| TETRACHLOROETHENE | 127-18-4 | 50 | ug/l | ND | 1 | | 1 | ND | 1 | | 1 | ND | 1 | | 1 | ND | 1 | | 1 | 0.4 | 1 | J | 1 | ND | 1 | | 1 | ND | 1 | | 1 |
| TOLUENE | 108-88-3 | 100000 | ug/l | ND | 1 | | 1 | ND | 1 | | 1 | ND | 1 | | 1 | ND | 1 | | 1 | ND | 1 | | 1 | ND | 1 | | 1 | ND | 1 | | 1 |
| TRANS-1,2-DICHLOROETHENE | 156-60-5 | 1000 | ug/l | ND | 1 | | 1 | ND | 1 | | 1 | ND | 1 | | 1 | ND | 1 | | 1 | ND | 1 | | 1 | ND | 1 | | 1 | ND | 1 | | 1 |
| TRANS-1,3-DICHLOROPROPENE | 10061-02-6 | NS | ug/l | ND | 1 | | 1 | ND | 1 | | 1 | ND | 1 | | 1 | ND | 1 | | 1 | ND | 1 | | 1 | ND | 1 | | 1 | ND | 1 | | 1 |
| TRANS-1,4-DICHLOROBUTENE | 110-57-6 | 5 | ug/l | ND | 1 | | 1 | ND | 1 | | 1 | ND | 1 | | 1 | ND | 1 | | 1 | ND | 1 | | 1 | ND | 1 | | 1 | ND | 1 | | 1 |
| TRIBROMOMETHANE | 75-25-2 | 10000 | ug/l | ND | 1 | | 1 | ND | 1 | | 1 | ND | 1 | | 1 | ND | 1 | | 1 | ND | 1 | | 1 | ND | 1 | | 1 | ND | 1 | | 1 |
| TRICHLOROETHYLENE | 79-01-6 | 50 | ug/l | ND | 1 | | 1 | ND | 1 | | 1 | ND | 1 | | 1 | ND | 1 | | 1 | 2.7 | 1 | | 1 | ND | 1 | | 1 | ND | 1 | | 1 |
| VINYL ACETATE | 108-05-4 | 1200 | ug/l | ND | 1 | | 1 | ND | 1 | | 1 | ND | 1 | | 1 | ND | 1 | | 1 | ND | 1 | | 1 | ND | 1 | | 1 | ND | 1 | | 1 |
| VINYL CHLORIDE | 75-01-4 | 20 | ug/l | ND | 1 | | 1 | ND | 1 | | 1 | ND | 1 | | 1 | ND | 1 | | 1 | ND | 1 | | 1 | ND | 1 | | 1 | ND | 1 | | 1 |
| XYLENE (TOTAL) | 1330-20-7 | 180000 | ug/l | ND | 1 | | 3 | ND | 1 | | 3 | ND | 1 | | 3 | ND | 1 | | 3 | ND | 1 | | 3 | ND | 1 | | 3 | ND | 1 | | 3 |

**Table 5**
**Summary of Groundwater Analytical Results - October 2008**
**Comparison to Pennsylvania Non-Residential Non-Use Aquifer Groundwater MSCs**
**U.S. Steel - RCRA Groundwater Sampling**
**Fairless Hills, Pennsylvania**

| | CAS No | PADEP Non-Residentail Non-Use Aquifer GW MSC | Location ID | MW3-29-29 | | | | MW3-34-28 | | | | MW3-41-29 | | | | MW4-10-23 | | | | MW4-11-33 | | | | MW4-14-36 | | | | MW4-2-24 | | | |
|---|---|---|---|---|---|---|---|---|---|---|---|---|---|---|---|---|---|---|---|---|---|---|---|---|---|---|---|---|---|---|---|
| | | | Sample ID | MW3-29-29_10-08-N | | | | MW3-34-28_10-08-N | | | | MW3-41-29_10-08-N | | | | MW4-10-23_10-08-N | | | | MW4-11-33_10-08-N | | | | MW4-14-36_10-08-N | | | | MW4-2-24_10-08-N | | | |
| | | | Sample Date | 10/16/2008 | | | | 10/16/2008 | | | | 10/16/2008 | | | | 10/17/2008 | | | | 10/15/2008 | | | | 10/17/2008 | | | | 10/16/2008 | | | |
| | | | Lab Id | C8J180168015 | | | | C8J180168016 | | | | C8J180168014 | | | | C8J180168022 | | | | C8J180168003 | | | | C8J180168019 | | | | C8J180168011 | | | |
| ***RCRA APPENDIX IX SEMI-VOLATILE ORGANIC COMPOUNDS (Method 8270)*** | | | | Result | DF | Q | RL | Result | DF | Q | RL | Result | DF | Q | RL | Result | DF | Q | RL | Result | DF | Q | RL | Result | DF | Q | RL | Result | DF | Q | RL |
| 1,2,4,5-TETRACHLOROBENZENE | 95-94-3 | 580 | ug/l | ND | 1.06 | | 1.1 | ND | 1.08 | | 1.1 | ND | 1.05 | | 1 | ND | 1.06 | | 1.1 | ND | 1.02 | | 1 | ND | 1.04 | | 1 | ND | 1.05 | | 1 |
| 1,2,4-TRICHLOROBENZENE | 120-82-1 | 44000 | ug/l | ND | 1.06 | | 0.21 | ND | 1.08 | | 0.22 | ND | 1.05 | | 0.21 | ND | 1.06 | | 0.21 | 0.062 | 1.02 | J | 0.2 | ND | 1.04 | | 0.21 | ND | 1.05 | | 0.21 |
| 1,2-DICHLOROBENZENE | 95-50-1 | 60000 | ug/l | ND | 1.06 | | 0.21 | ND | 1.08 | | 0.22 | ND | 1.05 | | 0.21 | ND | 1.06 | | 0.21 | 0.079 | 1.02 | J | 0.2 | ND | 1.04 | | 0.21 | ND | 1.05 | | 0.21 |
| 1,3,5-TRINITROBENZENE | 99-35-4 | NS | ug/l | ND | 1.06 | | 1.1 | ND | 1.08 | | 1.1 | ND | 1.05 | | 1 | ND | 1.06 | | 1.1 | ND | 1.02 | | 1 | ND | 1.04 | | 1 | ND | 1.05 | | 1 |
| 1,4-DICHLOROBENZENE | 106-46-7 | 7500 | ug/l | ND | 1.06 | | 0.21 | ND | 1.08 | | 0.22 | 0.085 | 1.05 | J | 0.21 | ND | 1.06 | | 0.21 | ND | 1.02 | | 0.2 | ND | 1.04 | | 0.21 | ND | 1.05 | | 0.21 |
| 1,4-NAPHTHOQUINONE | 130-15-4 | 5 | ug/l | ND | 1.06 | | 1.1 | ND | 1.08 | | 1.1 | ND | 1.05 | | 1 | ND | 1.06 | | 1.1 | ND | 1.02 | | 1 | ND | 1.04 | | 1 | ND | 1.05 | | 1 |
| 1-NAPHTHYLAMINE | 134-32-7 | 1400 | ug/l | ND | 1.06 | | 1.1 | ND | 1.08 | | 1.1 | ND | 1.05 | | 1 | ND | 1.06 | | 1.1 | ND | 1.02 | | 1 | ND | 1.04 | | 1 | ND | 1.05 | | 1 |
| 2,4,5-TRICHLOROPHENOL | 95-95-4 | 1000000 | ug/l | 0.36 | 1.06 | J | 1.1 | ND | 1.08 | | 1.1 | 0.28 | 1.05 | J | 1 | ND | 1.06 | | 1.1 | ND | 1.02 | | 1 | ND | 1.04 | | 1 | ND | 1.05 | | 1 |
| 2,4,6-TRICHLOROPHENOL | 88-06-2 | 31000 | ug/l | 0.07 | 1.06 | J | 1.1 | ND | 1.08 | | 1.1 | 0.13 | 1.05 | J | 1 | ND | 1.06 | | 1.1 | ND | 1.02 | | 1 | ND | 1.04 | | 1 | ND | 1.05 | | 1 |
| 2,4-DICHLOROPHENOL | 120-83-2 | 20000 | ug/l | ND | 1.06 | | 0.21 | ND | 1.08 | | 0.22 | 0.058 | 1.05 | J | 0.21 | ND | 1.06 | | 0.21 | ND | 1.02 | | 0.2 | ND | 1.04 | | 0.21 | ND | 1.05 | | 0.21 |
| 2,4-DIMETHYLPHENOL | 105-67-9 | 2000000 | ug/l | ND | 1.06 | | 1.1 | ND | 1.08 | | 1.1 | ND | 1.05 | | 1 | ND | 1.06 | | 1.1 | ND | 1.02 | | 1 | 0.033 | 1.04 | J | 1 | 0.072 | 1.05 | J | 1 |
| 2,4-DINITROPHENOL | 51-28-5 | 410 | ug/l | ND | 1.06 | | 5.3 | ND | 1.08 | | 5.4 | ND | 1.05 | | 5.2 | ND | 1.06 | | 5.3 | ND | 1.02 | | 5.1 | ND | 1.04 | | 5.2 | ND | 1.05 | | 5.2 |
| 2,4-DINITROTOLUENE | 121-14-2 | 8400 | ug/l | 0.71 | 1.06 | J | 1.1 | ND | 1.08 | | 1.1 | 0.71 | 1.05 | J | 1 | ND | 1.06 | | 1.1 | ND | 1.02 | | 1 | ND | 1.04 | | 1 | ND | 1.05 | | 1 |
| 2,6-DICHLOROPHENOL | 87-65-0 | NS | ug/l | ND | 1.06 | | 0.21 | ND | 1.08 | | 0.22 | ND | 1.05 | | 0.21 | ND | 1.06 | | 0.21 | ND | 1.02 | | 0.2 | ND | 1.04 | | 0.21 | ND | 1.05 | | 0.21 |
| 2,6-DINITROTOLUENE | 606-20-2 | 100000 | ug/l | ND | 1.06 | | 1.1 | ND | 1.08 | | 1.1 | ND | 1.05 | | 1 | ND | 1.06 | | 1.1 | ND | 1.02 | | 1 | ND | 1.04 | | 1 | ND | 1.05 | | 1 |
| 2-ACETYLAMINOFLUORENE | 53-96-3 | 680 | ug/l | ND | 1.06 | | 1.1 | ND | 1.08 | | 1.1 | ND | 1.05 | | 1 | ND | 1.06 | | 1.1 | ND | 1.02 | | 1 | ND | 1.04 | | 1 | ND | 1.05 | | 1 |
| 2-CHLORONAPHTHALENE | 91-58-7 | 8200 | ug/l | ND | 1.06 | | 0.21 | ND | 1.08 | | 0.22 | ND | 1.05 | | 0.21 | ND | 1.06 | | 0.21 | ND | 1.02 | | 0.2 | 0.02 | 1.04 | J | 0.21 | ND | 1.05 | | 0.21 |
| 2-CHLOROPHENOL | 95-57-8 | 40 | ug/l | ND | 1.06 | | 1.1 | ND | 1.08 | | 1.1 | ND | 1.05 | | 1 | ND | 1.06 | | 1.1 | ND | 1.02 | | 1 | ND | 1.04 | | 1 | ND | 1.05 | | 1 |
| 2-METHYL PYRIDINE (2-PICOLINE) | 109-06-8 | 5 | ug/l | ND | 1.06 | | 1.1 | ND | 1.08 | | 1.1 | ND | 1.05 | | 1 | ND | 1.06 | | 1.1 | ND | 1.02 | | 1 | ND | 1.04 | | 1 | ND | 1.05 | | 1 |
| 2-METHYLNAPHTHALENE | 91-57-6 | 2000 | ug/l | ND | 1.06 | | 0.21 | ND | 1.08 | | 0.22 | ND | 1.05 | | 0.21 | ND | 1.06 | | 0.21 | ND | 1.02 | | 0.2 | 0.029 | 1.04 | JB | 0.21 | ND | 1.05 | | 0.21 |
| 2-METHYLPHENOL | 95-48-7 | 510000 | ug/l | 0.13 | 1.06 | J | 1.1 | ND | 1.08 | | 1.1 | 0.16 | 1.05 | J | 1 | ND | 1.06 | | 1.1 | ND | 1.02 | | 1 | ND | 1.04 | | 1 | ND | 1.05 | | 1 |
| 2-NAPHTHALENAMINE (2-NAPHTHYLAMINE) | 91-59-8 | 1400 | ug/l | ND | 1.06 | | 1.1 | ND | 1.08 | | 1.1 | ND | 1.05 | | 1 | ND | 1.06 | | 1.1 | ND | 1.02 | | 1 | ND | 1.04 | | 1 | ND | 1.05 | | 1 |
| 2-NITROANILINE | 88-74-4 | 5.8 | ug/l | ND | 1.06 | | 5.3 | ND | 1.08 | | 5.4 | ND | 1.05 | | 5.2 | ND | 1.06 | | 5.3 | ND | 1.02 | | 5.1 | 0.028 | 1.04 | J | 5.2 | ND | 1.05 | | 5.2 |
| 2-NITROPHENOL | 88-75-5 | 820000 | ug/l | ND | 1.06 | | 1.1 | ND | 1.08 | | 1.1 | ND | 1.05 | | 1 | ND | 1.06 | | 1.1 | ND | 1.02 | | 1 | ND | 1.04 | | 1 | ND | 1.05 | | 1 |
| 3,3'-DICHLOROBENZIDINE | 91-94-1 | 3100 | ug/l | ND | 1.06 | | 1.1 | ND | 1.08 | | 1.1 | ND | 1.05 | | 1 | ND | 1.06 | | 1.1 | ND | 1.02 | | 1 | ND | 1.04 | | 1 | ND | 1.05 | | 1 |
| 3,3'-DIMETHYLBENZIDINE | 119-93-7 | 280 | ug/l | ND | 1.06 | | 11 | ND | 1.08 | | 11 | ND | 1.05 | | 10 | ND | 1.06 | | 11 | ND | 1.02 | | 10 | ND | 1.04 | | 10 | ND | 1.05 | | 10 |
| 3,5,5-TRIMETHYL-2-CYCLOHEXENE-1-ONE | 78-59-1 | 100000 | ug/l | ND | 1.06 | | 1.1 | ND | 1.08 | | 1.1 | ND | 1.05 | | 1 | ND | 1.06 | | 1.1 | ND | 1.02 | | 1 | ND | 1.04 | | 1 | ND | 1.05 | | 1 |
| 3-METHYLCHLORANTHRENE | 56-49-5 | NS | ug/l | ND | 1.06 | | 1.1 | ND | 1.08 | | 1.1 | ND | 1.05 | | 1 | ND | 1.06 | | 1.1 | ND | 1.02 | | 1 | ND | 1.04 | | 1 | ND | 1.05 | | 1 |
| 3-Methylphenol & 4-Methylphenol | 65794-96-9 | NS | ug/l | 0.56 | 1.06 | J | 1.1 | ND | 1.08 | | 1.1 | 0.37 | 1.05 | J | 1 | ND | 1.06 | | 1.1 | ND | 1.02 | | 1 | 0.043 | 1.04 | J | 1 | ND | 1.05 | | 1 |
| 3-NITROANILINE | 99-09-2 | 5.8 | ug/l | ND | 1.06 | | 5.3 | ND | 1.08 | | 5.4 | ND | 1.05 | | 5.2 | ND | 1.06 | | 5.3 | ND | 1.02 | | 5.1 | ND | 1.04 | | 5.2 | ND | 1.05 | | 5.2 |
| 4,6-DINITRO-2-METHYLPHENOL | 534-52-1 | 5 | ug/l | ND | 1.06 | | ***5.3*** | ND | 1.08 | | ***5.4*** | ND | 1.05 | | ***5.2*** | ND | 1.06 | | ***5.3*** | ND | 1.02 | | ***5.1*** | ND | 1.04 | | ***5.2*** | ND | 1.05 | | ***5.2*** |
| 4-AMINOBIPHENYL | 92-67-1 | 120 | ug/l | ND | 1.06 | | 1.1 | ND | 1.08 | | 1.1 | ND | 1.05 | | 1 | ND | 1.06 | | 1.1 | ND | 1.02 | | 1 | ND | 1.04 | | 1 | ND | 1.05 | | 1 |
| 4-BROMOPHENYL PHENYL ETHER | 101-55-3 | 5 | ug/l | ND | 1.06 | | 1.1 | ND | 1.08 | | 1.1 | ND | 1.05 | | 1 | ND | 1.06 | | 1.1 | ND | 1.02 | | 1 | ND | 1.04 | | 1 | ND | 1.05 | | 1 |
| 4-CHLORO-3-METHYLPHENOL | 59-50-7 | 510 | ug/l | ND | 1.06 | | 1.1 | ND | 1.08 | | 1.1 | ND | 1.05 | | 1 | ND | 1.06 | | 1.1 | ND | 1.02 | | 1 | ND | 1.04 | | 1 | ND | 1.05 | | 1 |
| 4-CHLOROPHENYL PHENYL ETHER | 7005-72-3 | 5 | ug/l | ND | 1.06 | | 1.1 | ND | 1.08 | | 1.1 | ND | 1.05 | | 1 | ND | 1.06 | | 1.1 | ND | 1.02 | | 1 | ND | 1.04 | | 1 | ND | 1.05 | | 1 |
| 4-DIMETHYLAMINOAZOBENZENE | 60-11-7 | 570 | ug/l | ND | 1.06 | | 1.1 | ND | 1.08 | | 1.1 | ND | 1.05 | | 1 | ND | 1.06 | | 1.1 | ND | 1.02 | | 1 | ND | 1.04 | | 1 | ND | 1.05 | | 1 |
| 4-NITROPHENOL | 100-02-7 | 60000 | ug/l | ND | 1.06 | | 5.3 | ND | 1.08 | | 5.4 | ND | 1.05 | | 5.2 | ND | 1.06 | | 5.3 | ND | 1.02 | | 5.1 | ND | 1.04 | | 5.2 | ND | 1.05 | | 5.2 |
| 4-NITROQUINOLINE-N-OXIDE | 56-57-5 | 5 | ug/l | ND | 1.06 | | ***11*** | ND | 1.08 | | ***11*** | ND | 1.05 | | ***10*** | ND | 1.06 | | ***11*** | ND | 1.02 | | ***10*** | ND | 1.04 | | ***10*** | ND | 1.05 | | ***10*** |
| 5-NITRO-O-TOLUIDINE | 99-55-8 | NS | ug/l | ND | 1.06 | | 11 | ND | 1.08 | | 11 | ND | 1.05 | | 10 | ND | 1.06 | | 11 | ND | 1.02 | | 10 | ND | 1.04 | | 10 | ND | 1.05 | | 10 |
| 7,12-DIMETHYLBENZ(A)ANTHRACENE | 57-97-6 | NS | ug/l | ND | 1.06 | | 1.1 | ND | 1.08 | | 1.1 | ND | 1.05 | | 1 | ND | 1.06 | | 1.1 | ND | 1.02 | | 1 | ND | 1.04 | | 1 | ND | 1.05 | | 1 |
| a,a-Dimethylphenethylamine | 122-09-8 | 5 | ug/l | ND | 1.06 | | 1.1 | ND | 1.08 | | 1.1 | ND | 1.05 | | 1 | ND | 1.06 | | 1.1 | ND | 1.02 | | 1 | ND | 1.04 | | 1 | ND | 1.05 | | 1 |
| ACENAPHTHENE | 83-32-9 | 3800 | ug/l | 0.42 | 1.06 | | 0.21 | ND | 1.08 | | 0.22 | 0.082 | 1.05 | J | 0.21 | ND | 1.06 | | 0.21 | 0.062 | 1.02 | J | 0.2 | 0.042 | 1.04 | JB | 0.21 | ND | 1.05 | | 0.21 |
| ACENAPHTHYLENE | 208-96-8 | 16000 | ug/l | 0.47 | 1.06 | | 0.21 | ND | 1.08 | | 0.22 | ND | 1.05 | | 0.21 | ND | 1.06 | | 0.21 | ND | 1.02 | | 0.2 | 0.023 | 1.04 | J | 0.21 | ND | 1.05 | | 0.21 |
| ACETOPHENONE | 98-86-2 | 10000 | ug/l | ND | 1.06 | | 1.1 | ND | 1.08 | | 1.1 | ND | 1.05 | | 1 | ND | 1.06 | | 1.1 | ND | 1.02 | | 1 | ND | 1.04 | | 1 | ND | 1.05 | | 1 |
| ANILINE | 62-53-3 | 5.8 | ug/l | ND | 1.06 | | 1.1 | ND | 1.08 | | 1.1 | ND | 1.05 | | 1 | ND | 1.06 | | 1.1 | ND | 1.02 | | 1 | ND | 1.04 | | 1 | ND | 1.05 | | 1 |
| ANTHRACENE | 120-12-7 | 66 | ug/l | ND | 1.06 | | 0.21 | ND | 1.08 | | 0.22 | 0.13 | 1.05 | J | 0.21 | ND | 1.06 | | 0.21 | 0.055 | 1.02 | J | 0.2 | 0.046 | 1.04 | J | 0.21 | ND | 1.05 | | 0.21 |
| ARAMITE | 140-57-8 | NS | ug/l | ND | 1.06 | | 1.1 | ND | 1.08 | | 1.1 | ND | 1.05 | | 1 | ND | 1.06 | | 1.1 | ND | 1.02 | | 1 | ND | 1.04 | | 1 | ND | 1.05 | | 1 |
| BENZO(A)ANTHRACENE | 56-55-3 | 11 | ug/l | ND | 1.06 | | 0.21 | ND | 1.08 | | 0.22 | ND | 1.05 | | 0.21 | ND | 1.06 | | 0.21 | ND | 1.02 | | 0.2 | ND | 1.04 | | 0.21 | ND | 1.05 | | 0.21 |
| BENZO(A)PYRENE | 50-32-8 | 3.8 | ug/l | ND | 1.06 | | 0.21 | ND | 1.08 | | 0.22 | ND | 1.05 | | 0.21 | ND | 1.06 | | 0.21 | ND | 1.02 | | 0.2 | ND | 1.04 | | 0.21 | ND | 1.05 | | 0.21 |
| BENZO(B)FLUORANTHENE | 205-99-2 | 1.2 | ug/l | ND | 1.06 | | 0.21 | 0.64 | 1.08 | | 0.22 | ND | 1.05 | | 0.21 | ND | 1.06 | | 0.21 | ND | 1.02 | | 0.2 | ND | 1.04 | | 0.21 | ND | 1.05 | | 0.21 |
| BENZO(GHI)PERYLENE | 191-24-2 | 0.26 | ug/l | ND | 1.06 | | 0.21 | ND | 1.08 | | 0.22 | ND | 1.05 | | 0.21 | ND | 1.06 | | 0.21 | ND | 1.02 | | 0.2 | ND | 1.04 | | 0.21 | ND | 1.05 | | 0.21 |
| BENZO(K)FLUORANTHENE | 207-08-9 | 0.55 | ug/l | ND | 1.06 | | 0.21 | ND | 1.08 | | 0.22 | ND | 1.05 | | 0.21 | ND | 1.06 | | 0.21 | ND | 1.02 | | 0.2 | ND | 1.04 | | 0.21 | ND | 1.05 | | 0.21 |
| BENZYL ALCOHOL | 100-51-6 | 31000 | ug/l | ND | 1.06 | | 1.1 | ND | 1.08 | | 1.1 | ND | 1.05 | | 1 | ND | 1.06 | | 1.1 | ND | 1.02 | | 1 | ND | 1.04 | | 1 | ND | 1.05 | | 1 |
| BENZYL BUTYL PHTHALATE | 85-68-7 | 2700 | ug/l | 0.26 | 1.06 | J | 1.1 | 0.27 | 1.08 | J | 1.1 | 0.47 | 1.05 | J | 1 | ND | 1.06 | | 1.1 | 0.24 | 1.02 | J | 1 | ND | 1.04 | | 1 | 0.26 | 1.05 | J | 1 |
| BIS(2-CHLORO-1-METHYLETHYL) ETHER | 108-60-1 | 30000 | ug/l | ND | 1.06 | | 0.21 | ND | 1.08 | | 0.22 | ND | 1.05 | | 0.21 | ND | 1.06 | | 0.21 | ND | 1.02 | | 0.2 | ND | 1.04 | | 0.21 | ND | 1.05 | | 0.21 |
| BIS(2-CHLOROETHOXY)METHANE | 111-91-1 | 5 | ug/l | ND | 1.06 | | 1.1 | ND | 1.08 | | 1.1 | ND | 1.05 | | 1 | ND | 1.06 | | 1.1 | ND | 1.02 | | 1 | ND | 1.04 | | 1 | ND | 1.05 | | 1 |
| BIS(2-CHLOROETHYL) ETHER | 111-44-4 | 55 | ug/l | ND | 1.06 | | 0.21 | ND | 1.08 | | 0.22 | ND | 1.05 | | 0.21 | ND | 1.06 | | 0.21 | ND | 1.02 | | 0.2 | ND | 1.04 | | 0.21 | ND | 1.05 | | 0.21 |
| BIS(2-ETHYLHEXYL)PHTHALATE | 117-81-7 | 290 | ug/l | 0.93 | 1.06 | J | 1.1 | ND | 1.08 | | 1.1 | 2.1 | 1.05 | | 1 | ND | 1.06 | | 1.1 | 0.33 | 1.02 | J | 1 | 1.9 | 1.04 | | 1 | 0.66 | 1.05 | J | 1 |
| CHLORDECONE (KEPONE) | 143-50-0 | 160 | ug/l | ND | 1.06 | | 4.2 | ND | 1.08 | | 4.3 | ND | 1.05 | | 4.2 | ND | 1.06 | | 4.2 | ND | 1.02 | | 4.1 | ND | 1.04 | | 4.2 | ND | 1.05 | | 4.2 |

**Table 5**
**Summary of Groundwater Analytical Results - October 2008**
**Comparison to Pennsylvania Non-Residential Non-Use Aquifer Groundwater MSCs**
**U.S. Steel - RCRA Groundwater Sampling**
**Fairless Hills, Pennsylvania**

| | CAS No | PADEP Non-Residentail Non-Use Aquifer GW MSC | Location ID | MW3-29-29 | | | | MW3-34-28 | | | | MW3-41-29 | | | | MW4-10-23 | | | | MW4-11-33 | | | | MW4-14-36 | | | | MW4-2-24 | | | |
|---|---|---|---|---|---|---|---|---|---|---|---|---|---|---|---|---|---|---|---|---|---|---|---|---|---|---|---|---|---|---|---|
| | | | Sample ID | MW3-29-29_10-08-N | | | | MW3-34-28_10-08-N | | | | MW3-41-29_10-08-N | | | | MW4-10-23_10-08-N | | | | MW4-11-33_10-08-N | | | | MW4-14-36_10-08-N | | | | MW4-2-24_10-08-N | | | |
| | | | Sample Date | 10/16/2008 | | | | 10/16/2008 | | | | 10/16/2008 | | | | 10/17/2008 | | | | 10/15/2008 | | | | 10/17/2008 | | | | 10/16/2008 | | | |
| | | | Lab Id | C8J180168015 | | | | C8J180168016 | | | | C8J180168014 | | | | C8J180168022 | | | | C8J180168003 | | | | C8J180168019 | | | | C8J180168011 | | | |
| ***RCRA APPENDIX IX SEMI-VOLATILE ORGANIC COMPOUNDS (Method 8270)*** | | | | Result | DF | Q | RL | Result | DF | Q | RL | Result | DF | Q | RL | Result | DF | Q | RL | Result | DF | Q | RL | Result | DF | Q | RL | Result | DF | Q | RL |
| CHLOROBENZILATE | 510-15-6 | 9600 | ug/l | ND | 1.06 | | 1.1 | ND | 1.08 | | 1.1 | ND | 1.05 | | 1 | ND | 1.06 | | 1.1 | ND | 1.02 | | 1 | ND | 1.04 | | 1 | ND | 1.05 | | 1 |
| CHLOROPHENOLS | 58-90-2 | 61000 | ug/l | ND | 1.06 | | 1.1 | ND | 1.08 | | 1.1 | ND | 1.05 | | 1 | ND | 1.06 | | 1.1 | ND | 1.02 | | 1 | ND | 1.04 | | 1 | ND | 1.05 | | 1 |
| CHRYSENE | 218-01-9 | 1.9 | ug/l | ND | 1.06 | | 0.21 | ND | 1.08 | | 0.22 | ND | 1.05 | | 0.21 | ND | 1.06 | | 0.21 | ND | 1.02 | | 0.2 | ND | 1.04 | | 0.21 | ND | 1.05 | | 0.21 |
| CYGON | 60-51-5 | 20000 | ug/l | ND | 1.06 | | 1.1 | ND | 1.08 | | 1.1 | ND | 1.05 | | 1 | ND | 1.06 | | 1.1 | ND | 1.02 | | 1 | ND | 1.04 | | 1 | ND | 1.05 | | 1 |
| DIALLATE | 2303-16-4 | 1000 | ug/l | ND | 1.06 | | 1.1 | ND | 1.08 | | 1.1 | ND | 1.05 | | 1 | ND | 1.06 | | 1.1 | ND | 1.02 | | 1 | ND | 1.04 | | 1 | ND | 1.05 | | 1 |
| DIBENZO(A,H)ANTHRACENE | 53-70-3 | 0.6 | ug/l | ND | 1.06 | | 0.21 | ND | 1.08 | | 0.22 | ND | 1.05 | | 0.21 | ND | 1.06 | | 0.21 | ND | 1.02 | | 0.2 | ND | 1.04 | | 0.21 | ND | 1.05 | | 0.21 |
| DIBENZOFURAN | 132-64-9 | 5 | ug/l | 0.19 | 1.06 | J | 1.1 | ND | 1.08 | | 1.1 | 0.084 | 1.05 | J | 1 | ND | 1.06 | | 1.1 | ND | 1.02 | | 1 | 0.056 | 1.04 | JB | 1 | ND | 1.05 | | 1 |
| DIETHYL PHTHALATE | 84-66-2 | 1100000 | ug/l | ND | 1.06 | | 1.1 | ND | 1.08 | | 1.1 | ND | 1.05 | | 1 | ND | 1.06 | | 1.1 | ND | 1.02 | | 1 | 0.087 | 1.04 | J | 1 | ND | 1.05 | | 1 |
| DIMETHYL PHTHALATE | 131-11-3 | 5 | ug/l | ND | 1.06 | | 1.1 | ND | 1.08 | | 1.1 | ND | 1.05 | | 1 | ND | 1.06 | | 1.1 | ND | 1.02 | | 1 | ND | 1.04 | | 1 | ND | 1.05 | | 1 |
| DI-N-BUTYL PHTHALATE | 84-74-2 | 400000 | ug/l | ND | 1.06 | | 1.1 | 0.071 | 1.08 | J | 1.1 | 0.13 | 1.05 | J | 1 | ND | 1.06 | | 1.1 | ND | 1.02 | | 1 | 0.063 | 1.04 | J | 1 | 0.099 | 1.05 | J | 1 |
| DINITROBUTYL PHENOL | 88-85-7 | 700 | ug/l | ND | 1.06 | | 1.1 | ND | 1.08 | | 1.1 | ND | 1.05 | | 1 | ND | 1.06 | | 1.1 | ND | 1.02 | | 1 | ND | 1.04 | | 1 | ND | 1.05 | | 1 |
| DI-N-OCTYL PHTHALATE | 117-84-0 | 3000 | ug/l | 0.5 | 1.06 | J | 1.1 | ND | 1.08 | | 1.1 | ND | 1.05 | | 1 | ND | 1.06 | | 1.1 | ND | 1.02 | | 1 | ND | 1.04 | | 1 | 0.49 | 1.05 | J | 1 |
| DISULFOTON | 298-04-4 | 30 | ug/l | ND | 1.06 | | 1.1 | ND | 1.08 | | 1.1 | ND | 1.05 | | 1 | ND | 1.06 | | 1.1 | ND | 1.02 | | 1 | ND | 1.04 | | 1 | ND | 1.05 | | 1 |
| ETHYL METHANESULFONATE | 62-50-0 | 5 | ug/l | ND | 1.06 | | 1.1 | ND | 1.08 | | 1.1 | ND | 1.05 | | 1 | ND | 1.06 | | 1.1 | ND | 1.02 | | 1 | ND | 1.04 | | 1 | ND | 1.05 | | 1 |
| ETHYL PARATHION (PARATHION) | 56-38-2 | 610 | ug/l | ND | 1.06 | | 1.1 | ND | 1.08 | | 1.1 | ND | 1.05 | | 1 | ND | 1.06 | | 1.1 | ND | 1.02 | | 1 | ND | 1.04 | | 1 | ND | 1.05 | | 1 |
| FAMPHUR | 52-85-7 | 5 | ug/l | ND | 1.06 | | ***11*** | ND | 1.08 | | ***11*** | ND | 1.05 | | ***10*** | ND | 1.06 | | ***11*** | ND | 1.02 | | ***10*** | ND | 1.04 | | ***10*** | ND | 1.05 | | ***10*** |
| FLUORANTHENE | 206-44-0 | 260 | ug/l | 0.43 | 1.06 | | 0.21 | 0.42 | 1.08 | | 0.22 | ND | 1.05 | | 0.21 | ND | 1.06 | | 0.21 | 0.4 | 1.02 | | 0.2 | ND | 1.04 | | 0.21 | ND | 1.05 | | 0.21 |
| FLUORENE | 86-73-7 | 1900 | ug/l | 0.067 | 1.06 | J | 0.21 | ND | 1.08 | | 0.22 | 0.15 | 1.05 | J | 0.21 | ND | 1.06 | | 0.21 | ND | 1.02 | | 0.2 | 0.053 | 1.04 | JB | 0.21 | ND | 1.05 | | 0.21 |
| HEXACHLORO-1,3-BUTADIENE | 87-68-3 | 1000 | ug/l | ND | 1.06 | | 0.21 | ND | 1.08 | | 0.22 | ND | 1.05 | | 0.21 | ND | 1.06 | | 0.21 | ND | 1.02 | | 0.2 | ND | 1.04 | | 0.21 | ND | 1.05 | | 0.21 |
| HEXACHLOROBENZENE | 118-74-1 | 6 | ug/l | 0.29 | 1.06 | | 0.21 | ND | 1.08 | | 0.22 | 0.2 | 1.05 | J | 0.21 | ND | 1.06 | | 0.21 | ND | 1.02 | | 0.2 | ND | 1.04 | | 0.21 | ND | 1.05 | | 0.21 |
| HEXACHLOROCYCLOPENTADIENE | 77-47-4 | 1800 | ug/l | ND | 1.06 | | 1.1 | ND | 1.08 | | 1.1 | ND | 1.05 | | 1 | ND | 1.06 | | 1.1 | ND | 1.02 | | 1 | ND | 1.04 | | 1 | ND | 1.05 | | 1 |
| HEXACHLOROETHANE | 67-72-1 | 100 | ug/l | ND | 1.06 | | 1.1 | ND | 1.08 | | 1.1 | ND | 1.05 | | 1 | ND | 1.06 | | 1.1 | ND | 1.02 | | 1 | ND | 1.04 | | 1 | ND | 1.05 | | 1 |
| HEXACHLOROPHENE (HCP) | 70-30-4 | NS | ug/l | ND | - | | 0 | ND | - | | 0 | ND | - | | 0 | ND | - | | 0 | ND | - | | 0 | ND | - | | 0 | ND | - | | 0 |
| HEXACHLOROPROPENE | 1888-71-7 | 5 | ug/l | ND | 1.06 | | 1.1 | ND | 1.08 | | 1.1 | ND | 1.05 | | 1 | ND | 1.06 | | 1.1 | ND | 1.02 | | 1 | ND | 1.04 | | 1 | ND | 1.05 | | 1 |
| INDENO(1,2,3-CD)PYRENE | 193-39-5 | 62 | ug/l | ND | 1.06 | | 0.21 | ND | 1.08 | | 0.22 | ND | 1.05 | | 0.21 | ND | 1.06 | | 0.21 | ND | 1.02 | | 0.2 | ND | 1.04 | | 0.21 | ND | 1.05 | | 0.21 |
| ISODRIN | 465-73-6 | 5 | ug/l | ND | 1.06 | | 1.1 | ND | 1.08 | | 1.1 | ND | 1.05 | | 1 | ND | 1.06 | | 1.1 | ND | 1.02 | | 1 | ND | 1.04 | | 1 | ND | 1.05 | | 1 |
| ISOSAFROLE | 120-58-1 | 5 | ug/l | ND | 1.06 | | 1.1 | ND | 1.08 | | 1.1 | ND | 1.05 | | 1 | ND | 1.06 | | 1.1 | ND | 1.02 | | 1 | ND | 1.04 | | 1 | ND | 1.05 | | 1 |
| M-DICHLOROBENZENE | 541-73-1 | 60000 | ug/l | ND | 1.06 | | 0.21 | ND | 1.08 | | 0.22 | 0.066 | 1.05 | J | 0.21 | ND | 1.06 | | 0.21 | ND | 1.02 | | 0.2 | ND | 1.04 | | 0.21 | ND | 1.05 | | 0.21 |
| M-DINITROBENZENE | 99-65-0 | 1000 | ug/l | ND | 1.06 | | 1.1 | ND | 1.08 | | 1.1 | ND | 1.05 | | 1 | ND | 1.06 | | 1.1 | ND | 1.02 | | 1 | ND | 1.04 | | 1 | ND | 1.05 | | 1 |
| METHANAMINE, N-METHYL-N-NITROSO | 62-75-9 | 0.13 | ug/l | ND | 1.06 | | ***1.1*** | ND | 1.08 | | ***1.1*** | ND | 1.05 | | ***1*** | ND | 1.06 | | ***1.1*** | ND | 1.02 | | ***1*** | ND | 1.04 | | ***1*** | ND | 1.05 | | ***1*** |
| METHAPYRILENE | 91-80-5 | NS | ug/l | ND | 1.06 | | 1.1 | ND | 1.08 | | 1.1 | ND | 1.05 | | 1 | ND | 1.06 | | 1.1 | ND | 1.02 | | 1 | ND | 1.04 | | 1 | ND | 1.05 | | 1 |
| METHYL METHANESULFONATE | 66-27-3 | 26 | ug/l | ND | 1.06 | | 1.1 | ND | 1.08 | | 1.1 | ND | 1.05 | | 1 | ND | 1.06 | | 1.1 | ND | 1.02 | | 1 | ND | 1.04 | | 1 | ND | 1.05 | | 1 |
| METHYL PARATHION | 298-00-0 | 200 | ug/l | ND | 1.06 | | 1.1 | ND | 1.08 | | 1.1 | ND | 1.05 | | 1 | ND | 1.06 | | 1.1 | ND | 1.02 | | 1 | ND | 1.04 | | 1 | ND | 1.05 | | 1 |
| NAPHTHALENE | 91-20-3 | 30000 | ug/l | 0.056 | 1.06 | J | 0.21 | 0.11 | 1.08 | J | 0.22 | ND | 1.05 | | 0.21 | ND | 1.06 | | 0.21 | 0.09 | 1.02 | J | 0.2 | 0.056 | 1.04 | J | 0.21 | ND | 1.05 | | 0.21 |
| NITROBENZENE | 98-95-3 | 51000 | ug/l | ND | 1.06 | | 0.21 | ND | 1.08 | | 0.22 | ND | 1.05 | | 0.21 | ND | 1.06 | | 0.21 | ND | 1.02 | | 0.2 | ND | 1.04 | | 0.21 | ND | 1.05 | | 0.21 |
| N-NITROSODIETHYLAMINE | 55-18-5 | 0.043 | ug/l | ND | 1.06 | | ***1.1*** | ND | 1.08 | | ***1.1*** | ND | 1.05 | | ***1*** | ND | 1.06 | | ***1.1*** | ND | 1.02 | | ***1*** | ND | 1.04 | | ***1*** | ND | 1.05 | | ***1*** |
| N-NITROSODI-N-BUTYLAMINE | 924-16-3 | 11 | ug/l | ND | 1.06 | | 1.1 | ND | 1.08 | | 1.1 | ND | 1.05 | | 1 | ND | 1.06 | | 1.1 | ND | 1.02 | | 1 | ND | 1.04 | | 1 | ND | 1.05 | | 1 |
| N-NITROSODI-N-PROPYLAMINE | 621-64-7 | 370 | ug/l | ND | 1.06 | | 0.21 | ND | 1.08 | | 0.22 | ND | 1.05 | | 0.21 | ND | 1.06 | | 0.21 | ND | 1.02 | | 0.2 | ND | 1.04 | | 0.21 | ND | 1.05 | | 0.21 |
| N-NITROSODIPHENYLAMINE | 86-30-6 | 35000 | ug/l | ND | 1.06 | | 0.21 | ND | 1.08 | | 0.22 | ND | 1.05 | | 0.21 | ND | 1.06 | | 0.21 | ND | 1.02 | | 0.2 | ND | 1.04 | | 0.21 | ND | 1.05 | | 0.21 |
| N-NITROSOMETHYLETHYLAMINE | 10595-95-6 | NS | ug/l | ND | 1.06 | | 1.1 | ND | 1.08 | | 1.1 | ND | 1.05 | | 1 | ND | 1.06 | | 1.1 | ND | 1.02 | | 1 | ND | 1.04 | | 1 | ND | 1.05 | | 1 |
| N-NITROSOMORPHOLINE | 59-89-2 | NS | ug/l | ND | 1.06 | | 1.1 | ND | 1.08 | | 1.1 | ND | 1.05 | | 1 | ND | 1.06 | | 1.1 | ND | 1.02 | | 1 | ND | 1.04 | | 1 | ND | 1.05 | | 1 |
| N-NITROSOPIPERIDINE | 100-75-4 | NS | ug/l | ND | 1.06 | | 1.1 | ND | 1.08 | | 1.1 | ND | 1.05 | | 1 | ND | 1.06 | | 1.1 | ND | 1.02 | | 1 | ND | 1.04 | | 1 | ND | 1.05 | | 1 |
| N-NITROSOPYRROLIDINE | 930-55-2 | NS | ug/l | ND | 1.06 | | 1.1 | ND | 1.08 | | 1.1 | ND | 1.05 | | 1 | ND | 1.06 | | 1.1 | ND | 1.02 | | 1 | ND | 1.04 | | 1 | ND | 1.05 | | 1 |
| O,O,O-TRIETHYL PHOSPHOROTHIOATE | 126-68-1 | 5 | ug/l | ND | 1.06 | | 1.1 | ND | 1.08 | | 1.1 | ND | 1.05 | | 1 | ND | 1.06 | | 1.1 | ND | 1.02 | | 1 | ND | 1.04 | | 1 | ND | 1.05 | | 1 |
| O,O-DIETHYL O-PYRAZINYL PHOSPHOROTHIOATE | 297-97-2 | 5 | ug/l | ND | 1.06 | | 1.1 | ND | 1.08 | | 1.1 | ND | 1.05 | | 1 | ND | 1.06 | | 1.1 | ND | 1.02 | | 1 | ND | 1.04 | | 1 | ND | 1.05 | | 1 |
| O-TOLUIDINE | 95-53-4 | 11000 | ug/l | ND | 1.06 | | 1.1 | ND | 1.08 | | 1.1 | ND | 1.05 | | 1 | ND | 1.06 | | 1.1 | ND | 1.02 | | 1 | ND | 1.04 | | 1 | ND | 1.05 | | 1 |
| P-CHLOROANILINE | 106-47-8 | 410 | ug/l | ND | 1.06 | | 1.1 | ND | 1.08 | | 1.1 | ND | 1.05 | | 1 | ND | 1.06 | | 1.1 | ND | 1.02 | | 1 | ND | 1.04 | | 1 | ND | 1.05 | | 1 |
| PENTACHLOROBENZENE | 608-93-5 | 740 | ug/l | ND | 1.06 | | 1.1 | ND | 1.08 | | 1.1 | ND | 1.05 | | 1 | ND | 1.06 | | 1.1 | ND | 1.02 | | 1 | ND | 1.04 | | 1 | ND | 1.05 | | 1 |
| PENTACHLORONITROBENZENE | 82-68-8 | 440 | ug/l | ND | 1.06 | | 1.1 | ND | 1.08 | | 1.1 | ND | 1.05 | | 1 | ND | 1.06 | | 1.1 | ND | 1.02 | | 1 | ND | 1.04 | | 1 | ND | 1.05 | | 1 |
| PENTACHLOROPHENOL | 87-86-5 | 1000 | ug/l | 0.53 | 1.06 | J | 1.1 | ND | 1.08 | | 1.1 | 1 | 1.05 | | 1 | ND | 1.06 | | 1.1 | ND | 1.02 | | 1 | ND | 1.04 | | 1 | ND | 1.05 | | 1 |
| PHENACETIN | 62-44-2 | 760000 | ug/l | ND | 1.06 | | 1.1 | ND | 1.08 | | 1.1 | ND | 1.05 | | 1 | ND | 1.06 | | 1.1 | ND | 1.02 | | 1 | ND | 1.04 | | 1 | ND | 1.05 | | 1 |
| PHENANTHRENE | 85-01-8 | 1100 | ug/l | 0.14 | 1.06 | JB | 0.21 | 0.14 | 1.08 | JB | 0.22 | 0.2 | 1.05 | JB | 0.21 | ND | 1.06 | | 0.21 | 0.12 | 1.02 | JB | 0.2 | 0.11 | 1.04 | JB | 0.21 | 0.13 | 1.05 | JB | 0.21 |
| PHENOL | 108-95-2 | 400000 | ug/l | 0.096 | 1.06 | J | 0.21 | 0.15 | 1.08 | J | 0.22 | ND | 1.05 | | 0.21 | ND | 1.06 | | 0.21 | 0.035 | 1.02 | J | 0.2 | ND | 1.04 | | 0.21 | ND | 1.05 | | 0.21 |
| PHORATE | 298-02-2 | 4.1 | ug/l | ND | 1.06 | | 1.1 | ND | 1.08 | | 1.1 | ND | 1.05 | | 1 | ND | 1.06 | | 1.1 | ND | 1.02 | | 1 | ND | 1.04 | | 1 | ND | 1.05 | | 1 |
| P-NITROANILINE | 100-01-6 | 5.8 | ug/l | ND | 1.06 | | 5.3 | ND | 1.08 | | 5.4 | ND | 1.05 | | 5.2 | ND | 1.06 | | 5.3 | ND | 1.02 | | 5.1 | ND | 1.04 | | 5.2 | ND | 1.05 | | 5.2 |
| P-PHENYLENEDIAMINE | 106-50-3 | NS | ug/l | ND | 1.06 | | 42 | ND | 1.08 | | 43 | ND | 1.05 | | 42 | ND | 1.06 | | 42 | ND | 1.02 | | 41 | ND | 1.04 | | 42 | ND | 1.05 | | 42 |
| PROPYZAMIDE | 23950-58-5 | 50 | ug/l | ND | 1.06 | | 1.1 | ND | 1.08 | | 1.1 | ND | 1.05 | | 1 | ND | 1.06 | | 1.1 | ND | 1.02 | | 1 | ND | 1.04 | | 1 | ND | 1.05 | | 1 |
| PYRENE | 129-00-0 | 130 | ug/l | 0.062 | 1.06 | J | 0.21 | 0.065 | 1.08 | J | 0.22 | 0.078 | 1.05 | J | 0.21 | ND | 1.06 | | 0.21 | ND | 1.02 | | 0.2 | ND | 1.04 | | 0.21 | ND | 1.05 | | 0.21 |
| PYRIDINE | 110-86-1 | 200 | ug/l | 0.15 | 1.06 | J | 1.1 | ND | 1.08 | | 1.1 | 0.18 | 1.05 | J | 1 | ND | 1.06 | | 1.1 | ND | 1.02 | | 1 | ND | 1.04 | | 1 | ND | 1.05 | | 1 |
| SAFROLE | 94-59-7 | NS | ug/l | ND | 1.06 | | 1.1 | ND | 1.08 | | 1.1 | ND | 1.05 | | 1 | ND | 1.06 | | 1.1 | ND | 1.02 | | 1 | ND | 1.04 | | 1 | ND | 1.05 | | 1 |
| SULFOTEP | 3689-24-5 | 10 | ug/l | ND | 1.06 | | 1.1 | ND | 1.08 | | 1.1 | ND | 1.05 | | 1 | ND | 1.06 | | 1.1 | ND | 1.02 | | 1 | ND | 1.04 | | 1 | ND | 1.05 | | 1 |
| ***RCRA APPENDIX IX METALS - Dissolved (Method 6010/7471)*** | | | | Result | DF | Q | RL | Result | DF | Q | RL | Result | DF | Q | RL | Result | DF | Q | RL | Result | DF | Q | RL | Result | DF | Q | RL | Result | DF | Q | RL |
| ANTIMONY | 7440-36-0 | 6000 | ug/l | 0.07 | 1 | JB | 2 | 0.1 | 1 | JB | 2 | 0.061 | 1 | JB | 2 | 0.28 | 1 | JB | 2 | ND | 1 | | 2 | ND | 1 | | 2 | 0.085 | 1 | JB | 2 |
| ARSENIC | 7440-38-2 | 50000 | ug/l | 1.4 | 1 | | 1 | 1.5 | 1 | | 1 | 2.9 | 1 | | 1 | 13.2 | 1 | | 1 | ND | 1 | | 1 | 0.64 | 1 | B | 1 | 33.2 | 1 | | 1 |
| BARIUM | 7440-39-3 | 2000000 | ug/l | 56.8 | 1 | | 10 | 31.6 | 1 | | 10 | 28.1 | 1 | | 10 | 44 | 1 | | 10 | 45.2 | 1 | | 10 | 5.4 | 1 | B | 10 | 316 | 1 | | 10 |
| BERYLLIUM | 7440-41-7 | 4000 | ug/l | ND | 1 | | 1 | ND | 1 | | 1 | ND | 1 | | 1 | ND | 1 | | 1 | 57.5 | 1 | | 1 | ND | 1 | | 1 | ND | 1 | | 1 |
| CADMIUM | 7440-43-9 | 5000 | ug/l | ND | 1 | | 1 | 0.29 | 1 | JB | 1 | 0.2 | 1 | JB | 1 | 0.18 | 1 | B | 1 | 13.6 | 1 | J | 1 | 0.22 | 1 | JB | 1 | ND | 1 | | 1 |
| CHROMIUM | 7440-47-3 | 100000 | ug/l | 3.1 | 1 | J | 2 | 3.8 | 1 | J | 2 | 3.7 | 1 | J | 2 | 4.2 | 1 | J | 2 | 8.2 | 1 | J | 2 | 5 | 1 | J | 2 | 2.9 | 1 | J | 2 |
| COBALT | 7440-48-4 | 2000000 | ug/l | 0.47 | 1 | B | 0.5 | 0.88 | 1 | | 0.5 | 2.4 | 1 | | 0.5 | 0.55 | 1 | | 0.5 | 371 | 1 | | 0.5 | 0.23 | 1 | B | 0.5 | 0.6 | 1 | | 0.5 |
| COPPER | 7440-50-8 | 1000000 | ug/l | 0.88 | 1 | B | 2 | 1.5 | 1 | B | 2 | 0.6 | 1 | B | 2 | 0.65 | 1 | B | 2 | 165 | 1 | | 2 | 1.4 | 1 | B | 2 | 0.47 | 1 | B | 2 |
| LEAD | 7439-92-1 | 5000 | ug/l | 0.29 | 1 | B | 1 | 0.25 | 1 | B | 1 | 0.42 | 1 | B | 1 | 0.12 | 1 | B | 1 | 3.5 | 1 | | 1 | 0.51 | 1 | B | 1 | 0.54 | 1 | B | 1 |
| MERCURY | 7439-97-6 | 2000 | ug/l | 0.046 | 1 | JB | 0.2 | 0.035 | 1 | JB | 0.2 | 0.04 | 1 | JB | 0.2 | 0.041 | 1 | JB | 0.2 | 0.046 | 1 | JB | 0.2 | 0.033 | 1 | JB | 0.2 | 0.029 | 1 | JB | 0.2 |
| NICKEL | 7440-02-0 | 100000 | ug/l | 1.6 | 1 | | 1 | 1.3 | 1 | | 1 | 2 | 1 | | 1 | 2.9 | 1 | | 1 | 430 | 1 | | 1 | 1.3 | 1 | | 1 | 0.97 | 1 | B | 1 |
| SELENIUM | 7782-49-2 | 50000 | ug/l | 1.6 | 1 | B | 5 | 1.8 | 1 | B | 5 | 1.7 | 1 | B | 5 | 0.49 | 1 | B | 5 | 12.2 | 1 | | 5 | 0.44 | 1 | B | 5 | 1.1 | 1 | B | 5 |
| SILVER | 7440-22-4 | 100000 | ug/l | ND | 1 | | 1 | ND | 1 | | 1 | ND | 1 | | 1 | ND | 1 | | 1 | ND | 1 | | 1 | ND | 1 | | 1 | ND | 1 | | 1 |
| THALLIUM | 7440-28-0 | 2000 | ug/l | ND | 1 | | 1 | 0.035 | 1 | JB | 1 | 0.024 | 1 | JB | 1 | 0.031 | 1 | B | 1 | 0.9 | 1 | JB | 1 | ND | 1 | | 1 | ND | 1 | | 1 |
| TIN | 7440-31-5 | 61000000 | ug/l | 3.8 | 1 | JB | 5 | 3.6 | 1 | JB | 5 | 3.9 | 1 | JB | 5 | 10 | 1 | J | 5 | 4.1 | 1 | JB | 5 | 2.7 | 1 | JB | 5 | 3.5 | 1 | JB | 5 |
| VANADIUM (FUME OR DUST) | 7440-62-2 | 720000 | ug/l | ND | 1 | | 1 | ND | 1 | | 1 | ND | 1 | | 1 | 1.3 | 1 | | 1 | 12.3 | 1 | | 1 | ND | 1 | | 1 | 0.12 | 1 | B | 1 |
| ZINC | 7440-66-6 | 2000000 | ug/l | 8.2 | 1 | | 5 | 8 | 1 | | 5 | 14.4 | 1 | | 5 | 9.1 | 1 | | 5 | 1280 | 1 | | 5 | 9.7 | 1 | | 5 | 8.3 | 1 | | 5 |

**Table 5**
**Summary of Groundwater Analytical Results - October 2008**
**Comparison to Pennsylvania Non-Residential Non-Use Aquifer Groundwater MSCs**
**U.S. Steel - RCRA Groundwater Sampling**
**Fairless Hills, Pennsylvania**

| | CAS No | PADEP Non-Residentail Non-Use Aquifer GW MSC | Location ID | MW4-30-63 | | | | MW4-33-25 | | | | MW5-11-27 | | | | MW5-12-27 | | | | MW5-12-27 | | | | MW5-18-26 | | | | MW5-21-20 | | | | MW5-22-32 | | | |
|---|---|---|---|---|---|---|---|---|---|---|---|---|---|---|---|---|---|---|---|---|---|---|---|---|---|---|---|---|---|---|---|---|---|---|---|
| | | | Sample ID | MW4-30-63_10-08-N | | | | MW4-33-25_10-08-N | | | | MW5-11-27_10-08-N | | | | MW5-12-27_10-08-N | | | | DUP002_10-08-N | | | | MW5-18-26_10-08-N | | | | MW5-21-20_10-08-N | | | | MW5-22-32_10-08-N | | | |
| | | | Sample Date | 10/20/2008 | | | | 10/16/2008 | | | | 10/14/2008 | | | | 10/16/2008 | | | | 10/16/2008 | | | | 10/15/2008 | | | | 10/17/2008 | | | | 10/17/2008 | | | |
| | | | Lab Id | C8J220361009 | | | | C8J180168009 | | | | C8J160299013 | | | | C8J180168017 | | | | C8J180168018 | | | | C8J160299008 | | | | C8J180168028 | | | | C8J180168029 | | | |
| ***RCRA APPENDIX IX VOLATILE ORGANIC COMPOUNDS (Method 8260)*** | | | | Result | DF | Q | RL | Result | DF | Q | RL | Result | DF | Q | RL | Result | DF | Q | RL | Result | DF | Q | RL | Result | DF | Q | RL | Result | DF | Q | RL | Result | DF | Q | RL |
| 1,1,1,2-TETRACHLOROETHANE | 630-20-6 | 7000 | ug/l | ND | 1 | | 1 | ND | 1 | | 1 | ND | 1 | | 1 | ND | 1 | | 1 | ND | | | 1 | ND | 1 | | 1 | ND | 1 | | 1 | ND | 1 | | 1 |
| 1,1,1-TRICHLOROETHANE | 71-55-6 | 2000 | ug/l | ND | 1 | | 1 | ND | 1 | | 1 | ND | 1 | | 1 | ND | 1 | | 1 | ND | 1 | | 1 | ND | 1 | | 1 | ND | 1 | | 1 | ND | 1 | | 1 |
| 1,1,2,2-TETRACHLOROETHANE | 79-34-5 | 30 | ug/l | ND | 1 | | 1 | ND | 1 | | 1 | ND | 1 | | 1 | ND | 1 | | 1 | ND | 1 | | 1 | ND | 1 | | 1 | ND | 1 | | 1 | ND | 1 | | 1 |
| 1,1,2-TRICHLOROETHANE | 79-00-5 | 50 | ug/l | ND | 1 | | 1 | ND | 1 | | 1 | ND | 1 | | 1 | ND | 1 | | 1 | ND | 1 | | 1 | ND | 1 | | 1 | ND | 1 | | 1 | ND | 1 | | 1 |
| 1,1-DICHLOROETHANE | 75-34-3 | 1100 | ug/l | ND | 1 | | 1 | ND | 1 | | 1 | ND | 1 | | 1 | ND | 1 | | 1 | ND | 1 | | 1 | ND | 1 | | 1 | ND | 1 | | 1 | ND | 1 | | 1 |
| 1,1-DICHLOROETHYLENE | 75-35-4 | 70 | ug/l | ND | 1 | | 1 | ND | 1 | | 1 | ND | 1 | | 1 | ND | 1 | | 1 | ND | 1 | | 1 | ND | 1 | | 1 | ND | 1 | | 1 | ND | 1 | | 1 |
| 1,2,3-TRICHLOROPROPANE | 96-18-4 | 4000 | ug/l | ND | 1 | | 1 | ND | 1 | | 1 | ND | 1 | | 1 | ND | 1 | | 1 | ND | 1 | | 1 | ND | 1 | | 1 | ND | 1 | | 1 | ND | 1 | | 1 |
| 1,2-DIBROMO-3-CHLOROPROPANE (DBCP) | 96-12-8 | 20 | ug/l | ND | 1 | | 1 | ND | 1 | | 1 | ND | 1 | | 1 | ND | 1 | | 1 | ND | 1 | | 1 | ND | 1 | | 1 | ND | 1 | | 1 | ND | 1 | | 1 |
| 1,2-DIBROMOETHANE | 106-93-4 | 5 | ug/l | ND | 1 | | 1 | ND | 1 | | 1 | ND | 1 | | 1 | ND | 1 | | 1 | ND | 1 | | 1 | ND | 1 | | 1 | ND | 1 | | 1 | ND | 1 | | 1 |
| 1,2-DICHLOROETHANE | 107-06-2 | 50 | ug/l | ND | 1 | | 1 | ND | 1 | | 1 | ND | 1 | | 1 | ND | 1 | | 1 | ND | 1 | | 1 | ND | 1 | | 1 | ND | 1 | | 1 | ND | 1 | | 1 |
| 1,2-DICHLOROPROPANE | 78-87-5 | 50 | ug/l | ND | 1 | | 1 | ND | 1 | | 1 | ND | 1 | | 1 | ND | 1 | | 1 | ND | 1 | | 1 | ND | 1 | | 1 | ND | 1 | | 1 | ND | 1 | | 1 |
| 1,4-DIOXANE | 123-91-1 | 240 | ug/l | ND | 1 | | 200 | ND | 1 | | 200 | ND | 1 | | 200 | ND | 1 | | 200 | ND | 1 | | 200 | ND | 1 | | 200 | ND | 1 | | 200 | ND | 1 | | 200 |
| 2-BUTANONE (MEK) | 78-93-3 | 580000 | ug/l | 1.1 | 1 | J | 5 | ND | 1 | | 5 | 0.86 | 1 | J | 5 | ND | 1 | | 5 | ND | 1 | | 5 | ND | 1 | | 5 | ND | 1 | | 5 | ND | 1 | | 5 |
| 2-CHLOR-1,3-BUTADIENE | 126-99-8 | 4100 | ug/l | ND | 1 | | 1 | ND | 1 | | 1 | ND | 1 | | 1 | ND | 1 | | 1 | ND | 1 | | 1 | ND | 1 | | 1 | ND | 1 | | 1 | ND | 1 | | 1 |
| 2-METHYL-1-PROPANOL | 78-83-1 | 610000 | ug/l | ND | 1 | | 40 | ND | 1 | | 40 | ND | 1 | | 40 | ND | 1 | | 40 | ND | 1 | | 40 | ND | 1 | | 40 | ND | 1 | | 40 | ND | 1 | | 40 |
| 4-METHYL-2-PENTANONE (MIBK) | 108-10-1 | 41000 | ug/l | ND | 1 | | 5 | ND | 1 | | 5 | ND | 1 | | 5 | ND | 1 | | 5 | ND | 1 | | 5 | ND | 1 | | 5 | ND | 1 | | 5 | ND | 1 | | 5 |
| ACETONE | 67-64-1 | 100000 | ug/l | 4.1 | 1 | J | 5 | 8.6 | 1 | | 5 | ND | 1 | | 5 | 3.5 | 1 | J | 5 | 3.3 | 1 | J | 5 | 66 | 1 | | 5 | ND | 1 | | 5 | ND | 1 | | 5 |
| ACETONITRILE | 75-05-8 | 3500 | ug/l | ND | 1 | | 20 | ND | 1 | | 20 | ND | 1 | | 20 | ND | 1 | | 20 | ND | 1 | | 20 | ND | 1 | | 20 | ND | 1 | | 20 | ND | 1 | | 20 |
| ACROLEIN | 107-02-8 | 1.2 | ug/l | ND | 1 | | ***20*** | ND | 1 | | ***20*** | ND | 1 | | ***20*** | ND | 1 | | ***20*** | ND | 1 | | ***20*** | ND | 1 | | ***20*** | ND | 1 | | ***20*** | ND | 1 | | ***20*** |
| ACRYLONITRILE | 107-13-1 | 270 | ug/l | ND | 1 | | 20 | ND | 1 | | 20 | ND | 1 | | 20 | ND | 1 | | 20 | ND | 1 | | 20 | ND | 1 | | 20 | ND | 1 | | 20 | ND | 1 | | 20 |
| ALLYLCHLORIDE | 107-05-1 | 580 | ug/l | ND | 1 | | 1 | ND | 1 | | 1 | ND | 1 | | 1 | ND | 1 | | 1 | ND | 1 | | 1 | ND | 1 | | 1 | ND | 1 | | 1 | ND | 1 | | 1 |
| BENZENE | 71-43-2 | 500 | ug/l | ND | 1 | | 1 | ND | 1 | | 1 | ND | 1 | | 1 | ND | 1 | | 1 | ND | 1 | | 1 | 2 | 1 | | 1 | ND | 1 | | 1 | ND | 1 | | 1 |
| BROMODICHLOROMETHANE | 75-27-4 | 100 | ug/l | ND | 1 | | 1 | ND | 1 | | 1 | ND | 1 | | 1 | ND | 1 | | 1 | ND | 1 | | 1 | ND | 1 | | 1 | ND | 1 | | 1 | ND | 1 | | 1 |
| BROMOMETHANE | 74-83-9 | 1000 | ug/l | ND | 1 | | 1 | ND | 1 | | 1 | ND | 1 | | 1 | ND | 1 | | 1 | ND | 1 | | 1 | ND | 1 | | 1 | ND | 1 | | 1 | ND | 1 | | 1 |
| CARBON DISULFIDE | 75-15-0 | 4100 | ug/l | ND | 1 | | 1 | 0.31 | 1 | J | 1 | ND | 1 | | 1 | ND | 1 | | 1 | ND | 1 | | 1 | ND | 1 | | 1 | ND | 1 | | 1 | ND | 1 | | 1 |
| CARBON TETRACHLORIDE | 56-23-5 | 50 | ug/l | ND | 1 | | 1 | ND | 1 | | 1 | ND | 1 | | 1 | ND | 1 | | 1 | ND | 1 | | 1 | ND | 1 | | 1 | ND | 1 | | 1 | ND | 1 | | 1 |
| CFC-11 | 75-69-4 | 200000 | ug/l | ND | 1 | | 1 | ND | 1 | | 1 | ND | 1 | | 1 | ND | 1 | | 1 | ND | 1 | | 1 | ND | 1 | | 1 | ND | 1 | | 1 | ND | 1 | | 1 |
| CFC-12 | 75-71-8 | 100000 | ug/l | ND | 1 | | 1 | ND | 1 | | 1 | ND | 1 | | 1 | ND | 1 | | 1 | ND | 1 | | 1 | ND | 1 | | 1 | ND | 1 | | 1 | ND | 1 | | 1 |
| CHLOROBENZENE | 108-90-7 | 10000 | ug/l | ND | 1 | | 1 | ND | 1 | | 1 | ND | 1 | | 1 | ND | 1 | | 1 | ND | 1 | | 1 | ND | 1 | | 1 | ND | 1 | | 1 | ND | 1 | | 1 |
| CHLORODIBROMOMETHANE | 124-48-1 | 10000 | ug/l | ND | 1 | | 1 | ND | 1 | | 1 | ND | 1 | | 1 | ND | 1 | | 1 | ND | 1 | | 1 | ND | 1 | | 1 | ND | 1 | | 1 | ND | 1 | | 1 |
| CHLOROETHANE | 75-00-3 | 90000 | ug/l | ND | 1 | | 1 | ND | 1 | | 1 | ND | 1 | | 1 | ND | 1 | | 1 | ND | 1 | | 1 | ND | 1 | | 1 | ND | 1 | | 1 | ND | 1 | | 1 |
| CHLOROFORM | 67-66-3 | 1000 | ug/l | ND | 1 | | 1 | ND | 1 | | 1 | ND | 1 | | 1 | ND | 1 | | 1 | ND | 1 | | 1 | ND | 1 | | 1 | ND | 1 | | 1 | ND | 1 | | 1 |
| CHLOROMETHANE | 74-87-3 | 300 | ug/l | ND | 1 | | 1 | ND | 1 | | 1 | ND | 1 | | 1 | ND | 1 | | 1 | ND | 1 | | 1 | ND | 1 | | 1 | ND | 1 | | 1 | ND | 1 | | 1 |
| CIS-1,3-DICHLOROPROPENE | 10061-01-5 | NS | ug/l | ND | 1 | | 1 | ND | 1 | | 1 | ND | 1 | | 1 | ND | 1 | | 1 | ND | 1 | | 1 | ND | 1 | | 1 | ND | 1 | | 1 | ND | 1 | | 1 |
| DIBROMOMETHANE | 74-95-3 | 20000 | ug/l | ND | 1 | | 1 | ND | 1 | | 1 | ND | 1 | | 1 | ND | 1 | | 1 | ND | 1 | | 1 | ND | 1 | | 1 | ND | 1 | | 1 | ND | 1 | | 1 |
| DICHLOROMETHANE | 75-09-2 | 500 | ug/l | ND | 1 | | 1 | ND | 1 | | 1 | ND | 1 | | 1 | ND | 1 | | 1 | ND | 1 | | 1 | ND | 1 | | 1 | ND | 1 | | 1 | ND | 1 | | 1 |
| ETHYL METHACRYLATE | 97-63-2 | 1800 | ug/l | ND | 1 | | 1 | ND | 1 | | 1 | ND | 1 | | 1 | ND | 1 | | 1 | ND | 1 | | 1 | ND | 1 | | 1 | ND | 1 | | 1 | ND | 1 | | 1 |
| ETHYLBENZENE | 100-41-4 | 70000 | ug/l | ND | 1 | | 1 | ND | 1 | | 1 | ND | 1 | | 1 | ND | 1 | | 1 | ND | 1 | | 1 | ND | 1 | | 1 | ND | 1 | | 1 | ND | 1 | | 1 |
| IODOMETHANE | 74-88-4 | 5 | ug/l | ND | 1 | | 1 | ND | 1 | | 1 | ND | 1 | | 1 | ND | 1 | | 1 | ND | 1 | | 1 | ND | 1 | | 1 | ND | 1 | | 1 | ND | 1 | | 1 |
| METHYL METHACRYLATE | 80-62-6 | 410000 | ug/l | ND | 1 | | 1 | ND | 1 | | 1 | ND | 1 | | 1 | ND | 1 | | 1 | ND | 1 | | 1 | ND | 1 | | 1 | ND | 1 | | 1 | ND | 1 | | 1 |
| METHYL N-BUTYL KETONE | 591-78-6 | 5 | ug/l | ND | 1 | | 5 | ND | 1 | | 5 | ND | 1 | | 5 | ND | 1 | | 5 | ND | 1 | | 5 | ND | 1 | | 5 | ND | 1 | | 5 | ND | 1 | | 5 |
| METHYLACRYLONITRILE | 126-98-7 | 4.1 | ug/l | ND | 1 | | 1 | ND | 1 | | 1 | ND | 1 | | 1 | ND | 1 | | 1 | ND | 1 | | 1 | ND | 1 | | 1 | ND | 1 | | 1 | ND | 1 | | 1 |
| PENTACHLOROETHANE | 76-01-7 | 5 | ug/l | ND | 1.18 | | 2.4 | ND | 1.22 | | 2.4 | ND | 1.04 | | 2.1 | ND | 1.08 | | 2.2 | ND | 1.09 | | 2.2 | ND | 1.05 | | 2.1 | ND | 1.19 | | 2.4 | ND | 1.18 | | 2.4 |
| PROPIONITRILE | 107-12-0 | 5 | ug/l | ND | 1 | | 2 | ND | 1 | | 2 | ND | 1 | | 2 | ND | 1 | | 2 | ND | 1 | | 2 | ND | 1 | | 2 | ND | 1 | | 2 | ND | 1 | | 2 |
| STYRENE (MONOMER) | 100-42-5 | 10000 | ug/l | ND | 1 | | 1 | ND | 1 | | 1 | ND | 1 | | 1 | ND | 1 | | 1 | ND | 1 | | 1 | ND | 1 | | 1 | ND | 1 | | 1 | ND | 1 | | 1 |
| TETRACHLOROETHENE | 127-18-4 | 50 | ug/l | ND | 1 | | 1 | ND | 1 | | 1 | ND | 1 | | 1 | ND | 1 | | 1 | ND | 1 | | 1 | ND | 1 | | 1 | ND | 1 | | 1 | ND | 1 | | 1 |
| TOLUENE | 108-88-3 | 100000 | ug/l | ND | 1 | | 1 | ND | 1 | | 1 | ND | 1 | | 1 | ND | 1 | | 1 | ND | 1 | | 1 | 0.42 | 1 | J | 1 | ND | 1 | | 1 | ND | 1 | | 1 |
| TRANS-1,2-DICHLOROETHENE | 156-60-5 | 1000 | ug/l | ND | 1 | | 1 | ND | 1 | | 1 | ND | 1 | | 1 | ND | 1 | | 1 | ND | 1 | | 1 | ND | 1 | | 1 | ND | 1 | | 1 | ND | 1 | | 1 |
| TRANS-1,3-DICHLOROPROPENE | 10061-02-6 | NS | ug/l | ND | 1 | | 1 | ND | 1 | | 1 | ND | 1 | | 1 | ND | 1 | | 1 | ND | 1 | | 1 | ND | 1 | | 1 | ND | 1 | | 1 | ND | 1 | | 1 |
| TRANS-1,4-DICHLOROBUTENE | 110-57-6 | 5 | ug/l | ND | 1 | | 1 | ND | 1 | | 1 | ND | 1 | | 1 | ND | 1 | | 1 | ND | 1 | | 1 | ND | 1 | | 1 | ND | 1 | | 1 | ND | 1 | | 1 |
| TRIBROMOMETHANE | 75-25-2 | 10000 | ug/l | ND | 1 | | 1 | ND | 1 | | 1 | ND | 1 | | 1 | ND | 1 | | 1 | ND | 1 | | 1 | ND | 1 | | 1 | ND | 1 | | 1 | ND | 1 | | 1 |
| TRICHLOROETHYLENE | 79-01-6 | 50 | ug/l | ND | 1 | | 1 | ND | 1 | | 1 | 0.73 | 1 | J | 1 | ND | 1 | | 1 | ND | 1 | | 1 | ND | 1 | | 1 | ND | 1 | | 1 | ND | 1 | | 1 |
| VINYL ACETATE | 108-05-4 | 1200 | ug/l | ND | 1 | | 1 | ND | 1 | | 1 | ND | 1 | | 1 | ND | 1 | | 1 | ND | 1 | | 1 | ND | 1 | | 1 | ND | 1 | | 1 | ND | 1 | | 1 |
| VINYL CHLORIDE | 75-01-4 | 20 | ug/l | ND | 1 | | 1 | ND | 1 | | 1 | ND | 1 | | 1 | ND | 1 | | 1 | ND | 1 | | 1 | ND | 1 | | 1 | ND | 1 | | 1 | ND | 1 | | 1 |
| XYLENE (TOTAL) | 1330-20-7 | 180000 | ug/l | ND | 1 | | 3 | ND | 1 | | 3 | ND | 1 | | 3 | ND | 1 | | 3 | ND | 1 | | 3 | ND | 1 | | 3 | ND | 1 | | 3 | ND | 1 | | 3 |

**Table 5**
**Summary of Groundwater Analytical Results - October 2008**
**Comparison to Pennsylvania Non-Residential Non-Use Aquifer Groundwater MSCs**
**U.S. Steel - RCRA Groundwater Sampling**
**Fairless Hills, Pennsylvania**

| | CAS No | PADEP Non-Residentail Non-Use Aquifer GW MSC | Location ID | MW4-30-63 | | | | MW4-33-25 | | | | MW5-11-27 | | | | MW5-12-27 | | | | MW5-12-27 | | | | MW5-18-26 | | | | MW5-21-20 | | | | MW5-22-32 | | | |
|---|---|---|---|---|---|---|---|---|---|---|---|---|---|---|---|---|---|---|---|---|---|---|---|---|---|---|---|---|---|---|---|---|---|---|---|
| | | | Sample ID | MW4-30-63_10-08-N | | | | MW4-33-25_10-08-N | | | | MW5-11-27_10-08-N | | | | MW5-12-27_10-08-N | | | | DUP002_10-08-N | | | | MW5-18-26_10-08-N | | | | MW5-21-20_10-08-N | | | | MW5-22-32_10-08-N | | | |
| | | | Sample Date | 10/20/2008 | | | | 10/16/2008 | | | | 10/14/2008 | | | | 10/16/2008 | | | | 10/16/2008 | | | | 10/15/2008 | | | | 10/17/2008 | | | | 10/17/2008 | | | |
| | | | Lab Id | C8J220361009 | | | | C8J180168009 | | | | C8J160299013 | | | | C8J180168017 | | | | C8J180168018 | | | | C8J160299008 | | | | C8J180168028 | | | | C8J180168029 | | | |
| ***RCRA APPENDIX IX SEMI-VOLATILE ORGANIC COMPOUNDS (Method 8270)*** | | | | Result | DF | Q | RL | Result | DF | Q | RL | Result | DF | Q | RL | Result | DF | Q | RL | Result | DF | Q | RL | Result | DF | Q | RL | Result | DF | Q | RL | Result | DF | Q | RL |
| 1,2,4,5-TETRACHLOROBENZENE | 95-94-3 | 580 | ug/l | ND | 1.18 | | 1.2 | ND | 1.22 | | 1.2 | ND | 1.04 | | 1 | ND | 1.08 | | 1.1 | ND | 1.09 | | 1.1 | ND | 1.05 | | 1 | ND | 1.19 | | 1.2 | ND | 1.18 | | 1.2 |
| 1,2,4-TRICHLOROBENZENE | 120-82-1 | 44000 | ug/l | ND | 1.18 | | 0.24 | ND | 1.22 | | 0.24 | ND | 1.04 | | 0.21 | ND | 1.08 | | 0.22 | ND | 1.09 | | 0.22 | ND | 1.05 | | 0.21 | ND | 1.19 | | 0.24 | ND | 1.18 | | 0.24 |
| 1,2-DICHLOROBENZENE | 95-50-1 | 60000 | ug/l | ND | 1.18 | | 0.24 | ND | 1.22 | | 0.24 | ND | 1.04 | | 0.21 | ND | 1.08 | | 0.22 | ND | 1.09 | | 0.22 | ND | 1.05 | | 0.21 | ND | 1.19 | | 0.24 | ND | 1.18 | | 0.24 |
| 1,3,5-TRINITROBENZENE | 99-35-4 | NS | ug/l | ND | 1.18 | | 1.2 | ND | 1.22 | | 1.2 | ND | 1.04 | | 1 | ND | 1.08 | | 1.1 | ND | 1.09 | | 1.1 | ND | 1.05 | | 1 | ND | 1.19 | | 1.2 | ND | 1.18 | | 1.2 |
| 1,4-DICHLOROBENZENE | 106-46-7 | 7500 | ug/l | ND | 1.18 | | 0.24 | ND | 1.22 | | 0.24 | ND | 1.04 | | 0.21 | ND | 1.08 | | 0.22 | ND | 1.09 | | 0.22 | ND | 1.05 | | 0.21 | ND | 1.19 | | 0.24 | ND | 1.18 | | 0.24 |
| 1,4-NAPHTHOQUINONE | 130-15-4 | 5 | ug/l | ND | 1.18 | | 1.2 | ND | 1.22 | | 1.2 | ND | 1.04 | | 1 | ND | 1.08 | | 1.1 | ND | 1.09 | | 1.1 | ND | 1.05 | | 1 | ND | 1.19 | | 1.2 | ND | 1.18 | | 1.2 |
| 1-NAPHTHYLAMINE | 134-32-7 | 1400 | ug/l | ND | 1.18 | | 1.2 | ND | 1.22 | | 1.2 | ND | 1.04 | | 1 | ND | 1.08 | | 1.1 | ND | 1.09 | | 1.1 | ND | 1.05 | | 1 | ND | 1.19 | | 1.2 | ND | 1.18 | | 1.2 |
| 2,4,5-TRICHLOROPHENOL | 95-95-4 | 1000000 | ug/l | ND | 1.18 | | 1.2 | ND | 1.22 | | 1.2 | ND | 1.04 | | 1 | ND | 1.08 | | 1.1 | ND | 1.09 | | 1.1 | ND | 1.05 | | 1 | ND | 1.19 | | 1.2 | ND | 1.18 | | 1.2 |
| 2,4,6-TRICHLOROPHENOL | 88-06-2 | 31000 | ug/l | ND | 1.18 | | 1.2 | ND | 1.22 | | 1.2 | ND | 1.04 | | 1 | ND | 1.08 | | 1.1 | ND | 1.09 | | 1.1 | ND | 1.05 | | 1 | ND | 1.19 | | 1.2 | ND | 1.18 | | 1.2 |
| 2,4-DICHLOROPHENOL | 120-83-2 | 20000 | ug/l | ND | 1.18 | | 0.24 | ND | 1.22 | | 0.24 | ND | 1.04 | | 0.21 | ND | 1.08 | | 0.22 | ND | 1.09 | | 0.22 | ND | 1.05 | | 0.21 | ND | 1.19 | | 0.24 | ND | 1.18 | | 0.24 |
| 2,4-DIMETHYLPHENOL | 105-67-9 | 2000000 | ug/l | ND | 1.18 | | 1.2 | ND | 1.22 | | 1.2 | ND | 1.04 | | 1 | ND | 1.08 | | 1.1 | ND | 1.09 | | 1.1 | 0.84 | 1.05 | J | 1 | ND | 1.19 | | 1.2 | ND | 1.18 | | 1.2 |
| 2,4-DINITROPHENOL | 51-28-5 | 410 | ug/l | ND | 1.18 | | 5.9 | ND | 1.22 | | 6.1 | ND | 1.04 | | 5.2 | ND | 1.08 | | 5.4 | ND | 1.09 | | 5.4 | ND | 1.05 | | 5.2 | ND | 1.19 | | 6 | ND | 1.18 | | 5.9 |
| 2,4-DINITROTOLUENE | 121-14-2 | 8400 | ug/l | ND | 1.18 | | 1.2 | ND | 1.22 | | 1.2 | ND | 1.04 | | 1 | ND | 1.08 | | 1.1 | ND | 1.09 | | 1.1 | ND | 1.05 | | 1 | ND | 1.19 | | 1.2 | ND | 1.18 | | 1.2 |
| 2,6-DICHLOROPHENOL | 87-65-0 | NS | ug/l | ND | 1.18 | | 0.24 | ND | 1.22 | | 0.24 | ND | 1.04 | | 0.21 | ND | 1.08 | | 0.22 | ND | 1.09 | | 0.22 | ND | 1.05 | | 0.21 | ND | 1.19 | | 0.24 | ND | 1.18 | | 0.24 |
| 2,6-DINITROTOLUENE | 606-20-2 | 100000 | ug/l | ND | 1.18 | | 1.2 | ND | 1.22 | | 1.2 | ND | 1.04 | | 1 | ND | 1.08 | | 1.1 | ND | 1.09 | | 1.1 | ND | 1.05 | | 1 | ND | 1.19 | | 1.2 | ND | 1.18 | | 1.2 |
| 2-ACETYLAMINOFLUORENE | 53-96-3 | 680 | ug/l | ND | 1.18 | | 1.2 | ND | 1.22 | | 1.2 | ND | 1.04 | | 1 | ND | 1.08 | | 1.1 | ND | 1.09 | | 1.1 | ND | 1.05 | | 1 | ND | 1.19 | | 1.2 | ND | 1.18 | | 1.2 |
| 2-CHLORONAPHTHALENE | 91-58-7 | 8200 | ug/l | ND | 1.18 | | 0.24 | ND | 1.22 | | 0.24 | ND | 1.04 | | 0.21 | ND | 1.08 | | 0.22 | ND | 1.09 | | 0.22 | ND | 1.05 | | 0.21 | ND | 1.19 | | 0.24 | ND | 1.18 | | 0.24 |
| 2-CHLOROPHENOL | 95-57-8 | 40 | ug/l | ND | 1.18 | | 1.2 | ND | 1.22 | | 1.2 | ND | 1.04 | | 1 | ND | 1.08 | | 1.1 | ND | 1.09 | | 1.1 | ND | 1.05 | | 1 | ND | 1.19 | | 1.2 | ND | 1.18 | | 1.2 |
| 2-METHYL PYRIDINE (2-PICOLINE) | 109-06-8 | 5 | ug/l | ND | 1.18 | | 1.2 | ND | 1.22 | | 1.2 | ND | 1.04 | | 1 | ND | 1.08 | | 1.1 | ND | 1.09 | | 1.1 | ND | 1.05 | | 1 | ND | 1.19 | | 1.2 | ND | 1.18 | | 1.2 |
| 2-METHYLNAPHTHALENE | 91-57-6 | 2000 | ug/l | ND | 1.18 | | 0.24 | ND | 1.22 | | 0.24 | ND | 1.04 | | 0.21 | ND | 1.08 | | 0.22 | ND | 1.09 | | 0.22 | 0.1 | 1.05 | J | 0.21 | ND | 1.19 | | 0.24 | ND | 1.18 | | 0.24 |
| 2-METHYLPHENOL | 95-48-7 | 510000 | ug/l | ND | 1.18 | | 1.2 | ND | 1.22 | | 1.2 | ND | 1.04 | | 1 | ND | 1.08 | | 1.1 | ND | 1.09 | | 1.1 | 1.1 | 1.05 | | 1 | ND | 1.19 | | 1.2 | ND | 1.18 | | 1.2 |
| 2-NAPHTHALENAMINE (2-NAPHTHYLAMINE) | 91-59-8 | 1400 | ug/l | ND | 1.18 | | 1.2 | ND | 1.22 | | 1.2 | ND | 1.04 | | 1 | ND | 1.08 | | 1.1 | ND | 1.09 | | 1.1 | ND | 1.05 | | 1 | ND | 1.19 | | 1.2 | ND | 1.18 | | 1.2 |
| 2-NITROANILINE | 88-74-4 | 5.8 | ug/l | ND | 1.18 | | ***5.9*** | ND | 1.22 | | ***6.1*** | ND | 1.04 | | 5.2 | ND | 1.08 | | 5.4 | ND | 1.09 | | 5.4 | ND | 1.05 | | 5.2 | ND | 1.19 | | ***6*** | ND | 1.18 | | ***5.9*** |
| 2-NITROPHENOL | 88-75-5 | 820000 | ug/l | ND | 1.18 | | 1.2 | ND | 1.22 | | 1.2 | ND | 1.04 | | 1 | ND | 1.08 | | 1.1 | ND | 1.09 | | 1.1 | ND | 1.05 | | 1 | ND | 1.19 | | 1.2 | ND | 1.18 | | 1.2 |
| 3,3'-DICHLOROBENZIDINE | 91-94-1 | 3100 | ug/l | ND | 1.18 | | 1.2 | ND | 1.22 | | 1.2 | ND | 1.04 | | 1 | ND | 1.08 | | 1.1 | ND | 1.09 | | 1.1 | ND | 1.05 | | 1 | ND | 1.19 | | 1.2 | ND | 1.18 | | 1.2 |
| 3,3'-DIMETHYLBENZIDINE | 119-93-7 | 280 | ug/l | ND | 1.18 | | 12 | ND | 1.22 | | 12 | ND | 1.04 | | 10 | ND | 1.08 | | 11 | ND | 1.09 | | 11 | ND | 1.05 | | 10 | ND | 1.19 | | 12 | ND | 1.18 | | 12 |
| 3,5,5-TRIMETHYL-2-CYCLOHEXENE-1-ONE | 78-59-1 | 100000 | ug/l | ND | 1.18 | | 1.2 | ND | 1.22 | | 1.2 | ND | 1.04 | | 1 | ND | 1.08 | | 1.1 | ND | 1.09 | | 1.1 | 0.15 | 1.05 | J | 1 | ND | 1.19 | | 1.2 | ND | 1.18 | | 1.2 |
| 3-METHYLCHLORANTHRENE | 56-49-5 | NS | ug/l | ND | 1.18 | | 1.2 | ND | 1.22 | | 1.2 | ND | 1.04 | | 1 | ND | 1.08 | | 1.1 | ND | 1.09 | | 1.1 | ND | 1.05 | | 1 | ND | 1.19 | | 1.2 | ND | 1.18 | | 1.2 |
| 3-Methylphenol & 4-Methylphenol | 65794-96-9 | NS | ug/l | ND | 1.18 | | 1.2 | ND | 1.22 | | 1.2 | ND | 1.04 | | 1 | ND | 1.08 | | 1.1 | ND | 1.09 | | 1.1 | 5 | 1.05 | | 1 | ND | 1.19 | | 1.2 | ND | 1.18 | | 1.2 |
| 3-NITROANILINE | 99-09-2 | 5.8 | ug/l | ND | 1.18 | | ***5.9*** | ND | 1.22 | | ***6.1*** | ND | 1.04 | | 5.2 | ND | 1.08 | | 5.4 | ND | 1.09 | | 5.4 | ND | 1.05 | | 5.2 | ND | 1.19 | | ***6*** | ND | 1.18 | | ***5.9*** |
| 4,6-DINITRO-2-METHYLPHENOL | 534-52-1 | 5 | ug/l | ND | 1.18 | | ***5.9*** | ND | 1.22 | | ***6.1*** | ND | 1.04 | | ***5.2*** | ND | 1.08 | | ***5.4*** | ND | 1.09 | | ***5.4*** | ND | 1.05 | | ***5.2*** | ND | 1.19 | | ***6*** | ND | 1.18 | | ***5.9*** |
| 4-AMINOBIPHENYL | 92-67-1 | 120 | ug/l | ND | 1.18 | | 1.2 | ND | 1.22 | | 1.2 | ND | 1.04 | | 1 | ND | 1.08 | | 1.1 | ND | 1.09 | | 1.1 | ND | 1.05 | | 1 | ND | 1.19 | | 1.2 | ND | 1.18 | | 1.2 |
| 4-BROMOPHENYL PHENYL ETHER | 101-55-3 | 5 | ug/l | ND | 1.18 | | 1.2 | ND | 1.22 | | 1.2 | ND | 1.04 | | 1 | ND | 1.08 | | 1.1 | ND | 1.09 | | 1.1 | ND | 1.05 | | 1 | ND | 1.19 | | 1.2 | ND | 1.18 | | 1.2 |
| 4-CHLORO-3-METHYLPHENOL | 59-50-7 | 510 | ug/l | ND | 1.18 | | 1.2 | ND | 1.22 | | 1.2 | ND | 1.04 | | 1 | ND | 1.08 | | 1.1 | ND | 1.09 | | 1.1 | ND | 1.05 | | 1 | ND | 1.19 | | 1.2 | ND | 1.18 | | 1.2 |
| 4-CHLOROPHENYL PHENYL ETHER | 7005-72-3 | 5 | ug/l | ND | 1.18 | | 1.2 | ND | 1.22 | | 1.2 | ND | 1.04 | | 1 | ND | 1.08 | | 1.1 | ND | 1.09 | | 1.1 | ND | 1.05 | | 1 | ND | 1.19 | | 1.2 | ND | 1.18 | | 1.2 |
| 4-DIMETHYLAMINOAZOBENZENE | 60-11-7 | 570 | ug/l | ND | 1.18 | | 1.2 | ND | 1.22 | | 1.2 | ND | 1.04 | | 1 | ND | 1.08 | | 1.1 | ND | 1.09 | | 1.1 | ND | 1.05 | | 1 | ND | 1.19 | | 1.2 | ND | 1.18 | | 1.2 |
| 4-NITROPHENOL | 100-02-7 | 60000 | ug/l | ND | 1.18 | | 5.9 | ND | 1.22 | | 6.1 | ND | 1.04 | | 5.2 | ND | 1.08 | | 5.4 | ND | 1.09 | | 5.4 | ND | 1.05 | | 5.2 | ND | 1.19 | | 6 | ND | 1.18 | | 5.9 |
| 4-NITROQUINOLINE-N-OXIDE | 56-57-5 | 5 | ug/l | ND | 1.18 | | ***12*** | ND | 1.22 | | ***12*** | ND | 1.04 | | ***10*** | ND | 1.08 | | ***11*** | ND | 1.09 | | ***11*** | ND | 1.05 | | ***10*** | ND | 1.19 | | ***12*** | ND | 1.18 | | ***12*** |
| 5-NITRO-O-TOLUIDINE | 99-55-8 | NS | ug/l | ND | 1.18 | | 12 | ND | 1.22 | | 12 | ND | 1.04 | | 10 | ND | 1.08 | | 11 | ND | 1.09 | | 11 | ND | 1.05 | | 10 | ND | 1.19 | | 12 | ND | 1.18 | | 12 |
| 7,12-DIMETHYLBENZ(A)ANTHRACENE | 57-97-6 | NS | ug/l | ND | 1.18 | | 1.2 | ND | 1.22 | | 1.2 | ND | 1.04 | | 1 | ND | 1.08 | | 1.1 | ND | 1.09 | | 1.1 | ND | 1.05 | | 1 | ND | 1.19 | | 1.2 | ND | 1.18 | | 1.2 |
| a,a-Dimethylphenethylamine | 122-09-8 | 5 | ug/l | ND | 1.18 | | 1.2 | ND | 1.22 | | 1.2 | ND | 1.04 | | 1 | ND | 1.08 | | 1.1 | ND | 1.09 | | 1.1 | ND | 1.05 | | 1 | ND | 1.19 | | 1.2 | ND | 1.18 | | 1.2 |
| ACENAPHTHENE | 83-32-9 | 3800 | ug/l | ND | 1.18 | | 0.24 | 2.7 | 1.22 | | 0.24 | ND | 1.04 | | 0.21 | ND | 1.08 | | 0.22 | ND | 1.09 | | 0.22 | 0.18 | 1.05 | J | 0.21 | ND | 1.19 | | 0.24 | 0.023 | 1.18 | JB | 0.24 |
| ACENAPHTHYLENE | 208-96-8 | 16000 | ug/l | ND | 1.18 | | 0.24 | ND | 1.22 | | 0.24 | ND | 1.04 | | 0.21 | ND | 1.08 | | 0.22 | ND | 1.09 | | 0.22 | ND | 1.05 | | 0.21 | ND | 1.19 | | 0.24 | ND | 1.18 | | 0.24 |
| ACETOPHENONE | 98-86-2 | 10000 | ug/l | 0.072 | 1.18 | J | 1.2 | ND | 1.22 | | 1.2 | ND | 1.04 | | 1 | ND | 1.08 | | 1.1 | ND | 1.09 | | 1.1 | 0.15 | 1.05 | J | 1 | ND | 1.19 | | 1.2 | ND | 1.18 | | 1.2 |
| ANILINE | 62-53-3 | 5.8 | ug/l | ND | 1.18 | | 1.2 | ND | 1.22 | | 1.2 | ND | 1.04 | | 1 | ND | 1.08 | | 1.1 | ND | 1.09 | | 1.1 | ND | 1.05 | | 1 | ND | 1.19 | | 1.2 | ND | 1.18 | | 1.2 |
| ANTHRACENE | 120-12-7 | 66 | ug/l | ND | 1.18 | | 0.24 | ND | 1.22 | | 0.24 | ND | 1.04 | | 0.21 | ND | 1.08 | | 0.22 | ND | 1.09 | | 0.22 | ND | 1.05 | | 0.21 | ND | 1.19 | | 0.24 | 0.022 | 1.18 | J | 0.24 |
| ARAMITE | 140-57-8 | NS | ug/l | ND | 1.18 | | 1.2 | ND | 1.22 | | 1.2 | ND | 1.04 | | 1 | ND | 1.08 | | 1.1 | ND | 1.09 | | 1.1 | ND | 1.05 | | 1 | ND | 1.19 | | 1.2 | ND | 1.18 | | 1.2 |
| BENZO(A)ANTHRACENE | 56-55-3 | 11 | ug/l | ND | 1.18 | | 0.24 | ND | 1.22 | | 0.24 | ND | 1.04 | | 0.21 | ND | 1.08 | | 0.22 | ND | 1.09 | | 0.22 | ND | 1.05 | | 0.21 | ND | 1.19 | | 0.24 | ND | 1.18 | | 0.24 |
| BENZO(A)PYRENE | 50-32-8 | 3.8 | ug/l | ND | 1.18 | | 0.24 | ND | 1.22 | | 0.24 | ND | 1.04 | | 0.21 | ND | 1.08 | | 0.22 | ND | 1.09 | | 0.22 | ND | 1.05 | | 0.21 | ND | 1.19 | | 0.24 | ND | 1.18 | | 0.24 |
| BENZO(B)FLUORANTHENE | 205-99-2 | 1.2 | ug/l | 0.96 | 1.18 | | 0.24 | ND | 1.22 | | 0.24 | ND | 1.04 | | 0.21 | ND | 1.08 | | 0.22 | ND | 1.09 | | 0.22 | ND | 1.05 | | 0.21 | ND | 1.19 | | 0.24 | ND | 1.18 | | 0.24 |
| BENZO(GHI)PERYLENE | 191-24-2 | 0.26 | ug/l | **0.8** | 1.18 | | 0.24 | ND | 1.22 | | 0.24 | ND | 1.04 | | 0.21 | ND | 1.08 | | 0.22 | ND | 1.09 | | 0.22 | ND | 1.05 | | 0.21 | ND | 1.19 | | 0.24 | ND | 1.18 | | 0.24 |
| BENZO(K)FLUORANTHENE | 207-08-9 | 0.55 | ug/l | ND | 1.18 | | 0.24 | ND | 1.22 | | 0.24 | ND | 1.04 | | 0.21 | ND | 1.08 | | 0.22 | ND | 1.09 | | 0.22 | ND | 1.05 | | 0.21 | ND | 1.19 | | 0.24 | ND | 1.18 | | 0.24 |
| BENZYL ALCOHOL | 100-51-6 | 31000 | ug/l | ND | 1.18 | | 1.2 | ND | 1.22 | | 1.2 | ND | 1.04 | | 1 | ND | 1.08 | | 1.1 | ND | 1.09 | | 1.1 | ND | 1.05 | | 1 | ND | 1.19 | | 1.2 | ND | 1.18 | | 1.2 |
| BENZYL BUTYL PHTHALATE | 85-68-7 | 2700 | ug/l | ND | 1.18 | | 1.2 | 0.4 | 1.22 | J | 1.2 | 0.35 | 1.04 | J | 1 | 0.28 | 1.08 | J | 1.1 | 0.33 | 1.09 | J | 1.1 | 0.18 | 1.05 | J | 1 | 0.18 | 1.19 | J | 1.2 | ND | 1.18 | | 1.2 |
| BIS(2-CHLORO-1-METHYLETHYL) ETHER | 108-60-1 | 30000 | ug/l | ND | 1.18 | | 0.24 | ND | 1.22 | | 0.24 | ND | 1.04 | | 0.21 | ND | 1.08 | | 0.22 | ND | 1.09 | | 0.22 | ND | 1.05 | | 0.21 | ND | 1.19 | | 0.24 | ND | 1.18 | | 0.24 |
| BIS(2-CHLOROETHOXY)METHANE | 111-91-1 | 5 | ug/l | ND | 1.18 | | 1.2 | ND | 1.22 | | 1.2 | ND | 1.04 | | 1 | ND | 1.08 | | 1.1 | ND | 1.09 | | 1.1 | ND | 1.05 | | 1 | ND | 1.19 | | 1.2 | ND | 1.18 | | 1.2 |
| BIS(2-CHLOROETHYL) ETHER | 111-44-4 | 55 | ug/l | ND | 1.18 | | 0.24 | ND | 1.22 | | 0.24 | ND | 1.04 | | 0.21 | ND | 1.08 | | 0.22 | ND | 1.09 | | 0.22 | ND | 1.05 | | 0.21 | ND | 1.19 | | 0.24 | ND | 1.18 | | 0.24 |
| BIS(2-ETHYLHEXYL)PHTHALATE | 117-81-7 | 290 | ug/l | ND | 1.18 | | 1.2 | ND | 1.22 | | 1.2 | 1.3 | 1.04 | | 1 | 0.38 | 1.08 | J | 1.1 | ND | 1.09 | | 1.1 | 0.4 | 1.05 | J | 1 | 1.4 | 1.19 | | 1.2 | 1.4 | 1.18 | | 1.2 |
| CHLORDECONE (KEPONE) | 143-50-0 | 160 | ug/l | ND | 1.18 | | 4.7 | ND | 1.22 | | 4.9 | ND | 1.04 | | 4.2 | ND | 1.08 | | 4.3 | ND | 1.09 | | 4.4 | ND | 1.05 | | 4.2 | ND | 1.19 | | 4.8 | ND | 1.18 | | 4.7 |

**Table 5**
**Summary of Groundwater Analytical Results - October 2008**
**Comparison to Pennsylvania Non-Residential Non-Use Aquifer Groundwater MSCs**
**U.S. Steel - RCRA Groundwater Sampling**
**Fairless Hills, Pennsylvania**

| | CAS No | PADEP Non-Residentail Non-Use Aquifer GW MSC | Location ID | MW4-30-63 | | | | MW4-33-25 | | | | MW5-11-27 | | | | MW5-12-27 | | | | MW5-12-27 | | | | MW5-18-26 | | | | MW5-21-20 | | | | MW5-22-32 | | | |
|---|---|---|---|---|---|---|---|---|---|---|---|---|---|---|---|---|---|---|---|---|---|---|---|---|---|---|---|---|---|---|---|---|---|---|---|
| | | | Sample ID | MW4-30-63_10-08-N | | | | MW4-33-25_10-08-N | | | | MW5-11-27_10-08-N | | | | MW5-12-27_10-08-N | | | | DUP002_10-08-N | | | | MW5-18-26_10-08-N | | | | MW5-21-20_10-08-N | | | | MW5-22-32_10-08-N | | | |
| | | | Sample Date | 10/20/2008 | | | | 10/16/2008 | | | | 10/14/2008 | | | | 10/16/2008 | | | | 10/16/2008 | | | | 10/15/2008 | | | | 10/17/2008 | | | | 10/17/2008 | | | |
| | | | Lab Id | C8J220361009 | | | | C8J180168009 | | | | C8J160299013 | | | | C8J180168017 | | | | C8J180168018 | | | | C8J160299008 | | | | C8J180168028 | | | | C8J180168029 | | | |
| ***RCRA APPENDIX IX SEMI-VOLATILE ORGANIC COMPOUNDS (Method 8270)*** | | | | Result | DF | Q | RL | Result | DF | Q | RL | Result | DF | Q | RL | Result | DF | Q | RL | Result | DF | Q | RL | Result | DF | Q | RL | Result | DF | Q | RL | Result | DF | Q | RL |
| CHLOROBENZILATE | 510-15-6 | 9600 | ug/l | ND | 1.18 | | 1.2 | ND | 1.22 | | 1.2 | ND | 1.04 | | 1 | ND | 1.08 | | 1.1 | ND | 1.09 | | 1.1 | ND | 1.05 | | 1 | ND | 1.19 | | 1.2 | ND | 1.18 | | 1.2 |
| CHLOROPHENOLS | 58-90-2 | 61000 | ug/l | ND | 1.18 | | 1.2 | ND | 1.22 | | 1.2 | ND | 1.04 | | 1 | ND | 1.08 | | 1.1 | ND | 1.09 | | 1.1 | ND | 1.05 | | 1 | ND | 1.19 | | 1.2 | ND | 1.18 | | 1.2 |
| CHRYSENE | 218-01-9 | 1.9 | ug/l | 0.14 | 1.18 | J | 0.24 | ND | 1.22 | | 0.24 | ND | 1.04 | | 0.21 | ND | 1.08 | | 0.22 | ND | 1.09 | | 0.22 | ND | 1.05 | | 0.21 | ND | 1.19 | | 0.24 | ND | 1.18 | | 0.24 |
| CYGON | 60-51-5 | 20000 | ug/l | ND | 1.18 | | 1.2 | ND | 1.22 | | 1.2 | ND | 1.04 | | 1 | ND | 1.08 | | 1.1 | ND | 1.09 | | 1.1 | ND | 1.05 | | 1 | ND | 1.19 | | 1.2 | ND | 1.18 | | 1.2 |
| DIALLATE | 2303-16-4 | 1000 | ug/l | ND | 1.18 | | 1.2 | ND | 1.22 | | 1.2 | ND | 1.04 | | 1 | ND | 1.08 | | 1.1 | ND | 1.09 | | 1.1 | ND | 1.05 | | 1 | ND | 1.19 | | 1.2 | ND | 1.18 | | 1.2 |
| DIBENZO(A,H)ANTHRACENE | 53-70-3 | 0.6 | ug/l | ND | 1.18 | | 0.24 | ND | 1.22 | | 0.24 | ND | 1.04 | | 0.21 | ND | 1.08 | | 0.22 | ND | 1.09 | | 0.22 | ND | 1.05 | | 0.21 | ND | 1.19 | | 0.24 | ND | 1.18 | | 0.24 |
| DIBENZOFURAN | 132-64-9 | 5 | ug/l | ND | 1.18 | | 1.2 | ND | 1.22 | | 1.2 | ND | 1.04 | | 1 | ND | 1.08 | | 1.1 | ND | 1.09 | | 1.1 | 0.095 | 1.05 | J | 1 | ND | 1.19 | | 1.2 | 0.026 | 1.18 | JB | 1.2 |
| DIETHYL PHTHALATE | 84-66-2 | 1100000 | ug/l | ND | 1.18 | | 1.2 | ND | 1.22 | | 1.2 | 0.27 | 1.04 | J | 1 | ND | 1.08 | | 1.1 | ND | 1.09 | | 1.1 | ND | 1.05 | | 1 | ND | 1.19 | | 1.2 | 0.12 | 1.18 | J | 1.2 |
| DIMETHYL PHTHALATE | 131-11-3 | 5 | ug/l | ND | 1.18 | | 1.2 | ND | 1.22 | | 1.2 | ND | 1.04 | | 1 | ND | 1.08 | | 1.1 | ND | 1.09 | | 1.1 | ND | 1.05 | | 1 | ND | 1.19 | | 1.2 | ND | 1.18 | | 1.2 |
| DI-N-BUTYL PHTHALATE | 84-74-2 | 400000 | ug/l | 5.9 | 1.18 | B | 1.2 | ND | 1.22 | | 1.2 | 0.3 | 1.04 | J | 1 | ND | 1.08 | | 1.1 | 0.058 | 1.09 | J | 1.1 | 0.21 | 1.05 | J | 1 | 0.091 | 1.19 | J | 1.2 | ND | 1.18 | | 1.2 |
| DINITROBUTYL PHENOL | 88-85-7 | 700 | ug/l | ND | 1.18 | | 1.2 | ND | 1.22 | | 1.2 | ND | 1.04 | | 1 | ND | 1.08 | | 1.1 | ND | 1.09 | | 1.1 | ND | 1.05 | | 1 | ND | 1.19 | | 1.2 | ND | 1.18 | | 1.2 |
| DI-N-OCTYL PHTHALATE | 117-84-0 | 3000 | ug/l | 0.77 | 1.18 | J | 1.2 | ND | 1.22 | | 1.2 | 0.47 | 1.04 | J | 1 | ND | 1.08 | | 1.1 | ND | 1.09 | | 1.1 | ND | 1.05 | | 1 | ND | 1.19 | | 1.2 | ND | 1.18 | | 1.2 |
| DISULFOTON | 298-04-4 | 30 | ug/l | ND | 1.18 | | 1.2 | ND | 1.22 | | 1.2 | ND | 1.04 | | 1 | ND | 1.08 | | 1.1 | ND | 1.09 | | 1.1 | ND | 1.05 | | 1 | ND | 1.19 | | 1.2 | ND | 1.18 | | 1.2 |
| ETHYL METHANESULFONATE | 62-50-0 | 5 | ug/l | ND | 1.18 | | 1.2 | ND | 1.22 | | 1.2 | ND | 1.04 | | 1 | ND | 1.08 | | 1.1 | ND | 1.09 | | 1.1 | ND | 1.05 | | 1 | ND | 1.19 | | 1.2 | ND | 1.18 | | 1.2 |
| ETHYL PARATHION (PARATHION) | 56-38-2 | 610 | ug/l | ND | 1.18 | | 1.2 | ND | 1.22 | | 1.2 | ND | 1.04 | | 1 | ND | 1.08 | | 1.1 | ND | 1.09 | | 1.1 | ND | 1.05 | | 1 | ND | 1.19 | | 1.2 | ND | 1.18 | | 1.2 |
| FAMPHUR | 52-85-7 | 5 | ug/l | ND | 1.18 | | ***12*** | ND | 1.22 | | ***12*** | ND | 1.04 | | ***10*** | ND | 1.08 | | ***11*** | ND | 1.09 | | ***11*** | ND | 1.05 | | ***10*** | ND | 1.19 | | ***12*** | ND | 1.18 | | ***12*** |
| FLUORANTHENE | 206-44-0 | 260 | ug/l | ND | 1.18 | | 0.24 | 0.49 | 1.22 | | 0.24 | ND | 1.04 | | 0.21 | ND | 1.08 | | 0.22 | ND | 1.09 | | 0.22 | ND | 1.05 | | 0.21 | ND | 1.19 | | 0.24 | ND | 1.18 | | 0.24 |
| FLUORENE | 86-73-7 | 1900 | ug/l | 0.44 | 1.18 | | 0.24 | ND | 1.22 | | 0.24 | ND | 1.04 | | 0.21 | ND | 1.08 | | 0.22 | ND | 1.09 | | 0.22 | 0.11 | 1.05 | J | 0.21 | ND | 1.19 | | 0.24 | 0.026 | 1.18 | JB | 0.24 |
| HEXACHLORO-1,3-BUTADIENE | 87-68-3 | 1000 | ug/l | ND | 1.18 | | 0.24 | ND | 1.22 | | 0.24 | ND | 1.04 | | 0.21 | ND | 1.08 | | 0.22 | ND | 1.09 | | 0.22 | ND | 1.05 | | 0.21 | ND | 1.19 | | 0.24 | ND | 1.18 | | 0.24 |
| HEXACHLOROBENZENE | 118-74-1 | 6 | ug/l | ND | 1.18 | | 0.24 | ND | 1.22 | | 0.24 | ND | 1.04 | | 0.21 | ND | 1.08 | | 0.22 | ND | 1.09 | | 0.22 | ND | 1.05 | | 0.21 | ND | 1.19 | | 0.24 | ND | 1.18 | | 0.24 |
| HEXACHLOROCYCLOPENTADIENE | 77-47-4 | 1800 | ug/l | ND | 1.18 | | 1.2 | ND | 1.22 | | 1.2 | ND | 1.04 | | 1 | ND | 1.08 | | 1.1 | ND | 1.09 | | 1.1 | ND | 1.05 | | 1 | ND | 1.19 | | 1.2 | ND | 1.18 | | 1.2 |
| HEXACHLOROETHANE | 67-72-1 | 100 | ug/l | ND | 1.18 | | 1.2 | ND | 1.22 | | 1.2 | ND | 1.04 | | 1 | ND | 1.08 | | 1.1 | ND | 1.09 | | 1.1 | ND | 1.05 | | 1 | ND | 1.19 | | 1.2 | ND | 1.18 | | 1.2 |
| HEXACHLOROPHENE (HCP) | 70-30-4 | NS | ug/l | ND | - | | 0 | ND | - | | 0 | ND | - | | 0 | ND | - | | 0 | ND | - | | 0 | ND | - | | 0 | ND | - | | 0 | ND | - | | 0 |
| HEXACHLOROPROPENE | 1888-71-7 | 5 | ug/l | ND | 1.18 | | 1.2 | ND | 1.22 | | 1.2 | ND | 1.04 | | 1 | ND | 1.08 | | 1.1 | ND | 1.09 | | 1.1 | ND | 1.05 | | 1 | ND | 1.19 | | 1.2 | ND | 1.18 | | 1.2 |
| INDENO(1,2,3-CD)PYRENE | 193-39-5 | 62 | ug/l | 1 | 1.18 | | 0.24 | ND | 1.22 | | 0.24 | ND | 1.04 | | 0.21 | ND | 1.08 | | 0.22 | ND | 1.09 | | 0.22 | ND | 1.05 | | 0.21 | ND | 1.19 | | 0.24 | ND | 1.18 | | 0.24 |
| ISODRIN | 465-73-6 | 5 | ug/l | ND | 1.18 | | 1.2 | ND | 1.22 | | 1.2 | ND | 1.04 | | 1 | ND | 1.08 | | 1.1 | ND | 1.09 | | 1.1 | ND | 1.05 | | 1 | ND | 1.19 | | 1.2 | ND | 1.18 | | 1.2 |
| ISOSAFROLE | 120-58-1 | 5 | ug/l | ND | 1.18 | | 1.2 | ND | 1.22 | | 1.2 | ND | 1.04 | | 1 | ND | 1.08 | | 1.1 | ND | 1.09 | | 1.1 | ND | 1.05 | | 1 | ND | 1.19 | | 1.2 | ND | 1.18 | | 1.2 |
| M-DICHLOROBENZENE | 541-73-1 | 60000 | ug/l | ND | 1.18 | | 0.24 | ND | 1.22 | | 0.24 | ND | 1.04 | | 0.21 | ND | 1.08 | | 0.22 | ND | 1.09 | | 0.22 | ND | 1.05 | | 0.21 | ND | 1.19 | | 0.24 | ND | 1.18 | | 0.24 |
| M-DINITROBENZENE | 99-65-0 | 1000 | ug/l | ND | 1.18 | | 1.2 | ND | 1.22 | | 1.2 | ND | 1.04 | | 1 | ND | 1.08 | | 1.1 | ND | 1.09 | | 1.1 | ND | 1.05 | | 1 | ND | 1.19 | | 1.2 | ND | 1.18 | | 1.2 |
| METHANAMINE, N-METHYL-N-NITROSO | 62-75-9 | 0.13 | ug/l | ND | 1.18 | | ***1.2*** | ND | 1.22 | | ***1.2*** | ND | 1.04 | | ***1*** | ND | 1.08 | | ***1.1*** | ND | 1.09 | | ***1.1*** | ND | 1.05 | | ***1*** | ND | 1.19 | | ***1.2*** | ND | 1.18 | | ***1.2*** |
| METHAPYRILENE | 91-80-5 | NS | ug/l | ND | 1.18 | | 1.2 | ND | 1.22 | | 1.2 | ND | 1.04 | | 1 | ND | 1.08 | | 1.1 | ND | 1.09 | | 1.1 | ND | 1.05 | | 1 | ND | 1.19 | | 1.2 | ND | 1.18 | | 1.2 |
| METHYL METHANESULFONATE | 66-27-3 | 26 | ug/l | ND | 1.18 | | 1.2 | ND | 1.22 | | 1.2 | ND | 1.04 | | 1 | ND | 1.08 | | 1.1 | ND | 1.09 | | 1.1 | ND | 1.05 | | 1 | ND | 1.19 | | 1.2 | ND | 1.18 | | 1.2 |
| METHYL PARATHION | 298-00-0 | 200 | ug/l | ND | 1.18 | | 1.2 | ND | 1.22 | | 1.2 | ND | 1.04 | | 1 | ND | 1.08 | | 1.1 | ND | 1.09 | | 1.1 | ND | 1.05 | | 1 | ND | 1.19 | | 1.2 | ND | 1.18 | | 1.2 |
| NAPHTHALENE | 91-20-3 | 30000 | ug/l | ND | 1.18 | | 0.24 | ND | 1.22 | | 0.24 | ND | 1.04 | | 0.21 | ND | 1.08 | | 0.22 | 0.055 | 1.09 | J | 0.22 | 1 | 1.05 | | 0.21 | ND | 1.19 | | 0.24 | ND | 1.18 | | 0.24 |
| NITROBENZENE | 98-95-3 | 51000 | ug/l | ND | 1.18 | | 0.24 | ND | 1.22 | | 0.24 | ND | 1.04 | | 0.21 | ND | 1.08 | | 0.22 | ND | 1.09 | | 0.22 | ND | 1.05 | | 0.21 | ND | 1.19 | | 0.24 | ND | 1.18 | | 0.24 |
| N-NITROSODIETHYLAMINE | 55-18-5 | 0.043 | ug/l | ND | 1.18 | | ***1.2*** | ND | 1.22 | | ***1.2*** | ND | 1.04 | | ***1*** | ND | 1.08 | | ***1.1*** | ND | 1.09 | | ***1.1*** | ND | 1.05 | | ***1*** | ND | 1.19 | | ***1.2*** | ND | 1.18 | | ***1.2*** |
| N-NITROSODI-N-BUTYLAMINE | 924-16-3 | 11 | ug/l | ND | 1.18 | | 1.2 | ND | 1.22 | | 1.2 | ND | 1.04 | | 1 | ND | 1.08 | | 1.1 | ND | 1.09 | | 1.1 | ND | 1.05 | | 1 | ND | 1.19 | | 1.2 | ND | 1.18 | | 1.2 |
| N-NITROSODI-N-PROPYLAMINE | 621-64-7 | 370 | ug/l | ND | 1.18 | | 0.24 | ND | 1.22 | | 0.24 | ND | 1.04 | | 0.21 | ND | 1.08 | | 0.22 | ND | 1.09 | | 0.22 | ND | 1.05 | | 0.21 | ND | 1.19 | | 0.24 | ND | 1.18 | | 0.24 |
| N-NITROSODIPHENYLAMINE | 86-30-6 | 35000 | ug/l | ND | 1.18 | | 0.24 | ND | 1.22 | | 0.24 | ND | 1.04 | | 0.21 | ND | 1.08 | | 0.22 | ND | 1.09 | | 0.22 | ND | 1.05 | | 0.21 | ND | 1.19 | | 0.24 | ND | 1.18 | | 0.24 |
| N-NITROSOMETHYLETHYLAMINE | 10595-95-6 | NS | ug/l | ND | 1.18 | | 1.2 | ND | 1.22 | | 1.2 | ND | 1.04 | | 1 | ND | 1.08 | | 1.1 | ND | 1.09 | | 1.1 | ND | 1.05 | | 1 | ND | 1.19 | | 1.2 | ND | 1.18 | | 1.2 |
| N-NITROSOMORPHOLINE | 59-89-2 | NS | ug/l | ND | 1.18 | | 1.2 | ND | 1.22 | | 1.2 | ND | 1.04 | | 1 | ND | 1.08 | | 1.1 | ND | 1.09 | | 1.1 | ND | 1.05 | | 1 | ND | 1.19 | | 1.2 | ND | 1.18 | | 1.2 |
| N-NITROSOPIPERIDINE | 100-75-4 | NS | ug/l | ND | 1.18 | | 1.2 | ND | 1.22 | | 1.2 | ND | 1.04 | | 1 | ND | 1.08 | | 1.1 | ND | 1.09 | | 1.1 | ND | 1.05 | | 1 | ND | 1.19 | | 1.2 | ND | 1.18 | | 1.2 |
| N-NITROSOPYRROLIDINE | 930-55-2 | NS | ug/l | ND | 1.18 | | 1.2 | ND | 1.22 | | 1.2 | ND | 1.04 | | 1 | ND | 1.08 | | 1.1 | ND | 1.09 | | 1.1 | ND | 1.05 | | 1 | ND | 1.19 | | 1.2 | ND | 1.18 | | 1.2 |
| O,O,O-TRIETHYL PHOSPHOROTHIOATE | 126-68-1 | 5 | ug/l | ND | 1.18 | | 1.2 | ND | 1.22 | | 1.2 | ND | 1.04 | | 1 | ND | 1.08 | | 1.1 | ND | 1.09 | | 1.1 | ND | 1.05 | | 1 | ND | 1.19 | | 1.2 | ND | 1.18 | | 1.2 |
| O,O-DIETHYL O-PYRAZINYL PHOSPHOROTHIOATE | 297-97-2 | 5 | ug/l | ND | 1.18 | | 1.2 | ND | 1.22 | | 1.2 | ND | 1.04 | | 1 | ND | 1.08 | | 1.1 | ND | 1.09 | | 1.1 | ND | 1.05 | | 1 | ND | 1.19 | | 1.2 | ND | 1.18 | | 1.2 |
| O-TOLUIDINE | 95-53-4 | 11000 | ug/l | ND | 1.18 | | 1.2 | ND | 1.22 | | 1.2 | ND | 1.04 | | 1 | ND | 1.08 | | 1.1 | ND | 1.09 | | 1.1 | ND | 1.05 | | 1 | ND | 1.19 | | 1.2 | ND | 1.18 | | 1.2 |
| P-CHLOROANILINE | 106-47-8 | 410 | ug/l | ND | 1.18 | | 1.2 | ND | 1.22 | | 1.2 | ND | 1.04 | | 1 | ND | 1.08 | | 1.1 | ND | 1.09 | | 1.1 | ND | 1.05 | | 1 | ND | 1.19 | | 1.2 | ND | 1.18 | | 1.2 |
| PENTACHLOROBENZENE | 608-93-5 | 740 | ug/l | ND | 1.18 | | 1.2 | ND | 1.22 | | 1.2 | ND | 1.04 | | 1 | ND | 1.08 | | 1.1 | ND | 1.09 | | 1.1 | ND | 1.05 | | 1 | ND | 1.19 | | 1.2 | ND | 1.18 | | 1.2 |
| PENTACHLORONITROBENZENE | 82-68-8 | 440 | ug/l | ND | 1.18 | | 1.2 | ND | 1.22 | | 1.2 | ND | 1.04 | | 1 | ND | 1.08 | | 1.1 | ND | 1.09 | | 1.1 | ND | 1.05 | | 1 | ND | 1.19 | | 1.2 | ND | 1.18 | | 1.2 |
| PENTACHLOROPHENOL | 87-86-5 | 1000 | ug/l | ND | 1.18 | | 1.2 | ND | 1.22 | | 1.2 | ND | 1.04 | | 1 | ND | 1.08 | | 1.1 | ND | 1.09 | | 1.1 | ND | 1.05 | | 1 | ND | 1.19 | | 1.2 | ND | 1.18 | | 1.2 |
| PHENACETIN | 62-44-2 | 760000 | ug/l | ND | 1.18 | | 1.2 | ND | 1.22 | | 1.2 | ND | 1.04 | | 1 | ND | 1.08 | | 1.1 | ND | 1.09 | | 1.1 | ND | 1.05 | | 1 | ND | 1.19 | | 1.2 | ND | 1.18 | | 1.2 |
| PHENANTHRENE | 85-01-8 | 1100 | ug/l | 0.11 | 1.18 | J | 0.24 | 0.18 | 1.22 | JB | 0.24 | 0.098 | 1.04 | JB | 0.21 | 0.15 | 1.08 | JB | 0.22 | 0.17 | 1.09 | JB | 0.22 | 0.26 | 1.05 | B | 0.21 | 0.072 | 1.19 | J | 0.24 | 0.074 | 1.18 | JB | 0.24 |
| PHENOL | 108-95-2 | 400000 | ug/l | ND | 1.18 | | 0.24 | ND | 1.22 | | 0.24 | 0.048 | 1.04 | J | 0.21 | 0.14 | 1.08 | J | 0.22 | 0.084 | 1.09 | J | 0.22 | 31 | 1.05 | | 0.21 | ND | 1.19 | | 0.24 | ND | 1.18 | | 0.24 |
| PHORATE | 298-02-2 | 4.1 | ug/l | ND | 1.18 | | 1.2 | ND | 1.22 | | 1.2 | ND | 1.04 | | 1 | ND | 1.08 | | 1.1 | ND | 1.09 | | 1.1 | ND | 1.05 | | 1 | ND | 1.19 | | 1.2 | ND | 1.18 | | 1.2 |
| P-NITROANILINE | 100-01-6 | 5.8 | ug/l | ND | 1.18 | | ***5.9*** | ND | 1.22 | | ***6.1*** | ND | 1.04 | | 5.2 | ND | 1.08 | | 5.4 | ND | 1.09 | | 5.4 | ND | 1.05 | | 5.2 | ND | 1.19 | | ***6*** | ND | 1.18 | | ***5.9*** |
| P-PHENYLENEDIAMINE | 106-50-3 | NS | ug/l | ND | 1.18 | | 47 | ND | 1.22 | | 49 | ND | 1.04 | | 42 | ND | 1.08 | | 43 | ND | 1.09 | | 44 | ND | 1.05 | | 42 | ND | 1.19 | | 48 | ND | 1.18 | | 47 |
| PROPYZAMIDE | 23950-58-5 | 50 | ug/l | ND | 1.18 | | 1.2 | ND | 1.22 | | 1.2 | ND | 1.04 | | 1 | ND | 1.08 | | 1.1 | ND | 1.09 | | 1.1 | ND | 1.05 | | 1 | ND | 1.19 | | 1.2 | ND | 1.18 | | 1.2 |
| PYRENE | 129-00-0 | 130 | ug/l | 0.093 | 1.18 | J | 0.24 | 0.094 | 1.22 | J | 0.24 | ND | 1.04 | | 0.21 | ND | 1.08 | | 0.22 | ND | 1.09 | | 0.22 | ND | 1.05 | | 0.21 | ND | 1.19 | | 0.24 | ND | 1.18 | | 0.24 |
| PYRIDINE | 110-86-1 | 200 | ug/l | ND | 1.18 | | 1.2 | ND | 1.22 | | 1.2 | 0.16 | 1.04 | J | 1 | ND | 1.08 | | 1.1 | ND | 1.09 | | 1.1 | 0.3 | 1.05 | J | 1 | ND | 1.19 | | 1.2 | ND | 1.18 | | 1.2 |
| SAFROLE | 94-59-7 | NS | ug/l | ND | 1.18 | | 1.2 | ND | 1.22 | | 1.2 | ND | 1.04 | | 1 | ND | 1.08 | | 1.1 | ND | 1.09 | | 1.1 | ND | 1.05 | | 1 | ND | 1.19 | | 1.2 | ND | 1.18 | | 1.2 |
| SULFOTEP | 3689-24-5 | 10 | ug/l | ND | 1.18 | | 1.2 | ND | 1.22 | | 1.2 | ND | 1.04 | | 1 | ND | 1.08 | | 1.1 | ND | 1.09 | | 1.1 | ND | 1.05 | | 1 | ND | 1.19 | | 1.2 | ND | 1.18 | | 1.2 |
| ***RCRA APPENDIX IX METALS - Dissolved (Method 6010/7471)*** | | | | Result | DF | Q | RL | Result | DF | Q | RL | Result | DF | Q | RL | Result | DF | Q | RL | Result | DF | Q | RL | Result | DF | Q | RL | Result | DF | Q | RL | Result | DF | Q | RL |
| ANTIMONY | 7440-36-0 | 6000 | ug/l | 0.11 | 1 | B | 2 | 0.21 | 1 | JB | 2 | 0.12 | 1 | B | 2 | ND | 1 | | 2 | ND | 1 | | 2 | 0.3 | 1 | B | 2 | 0.087 | 1 | JB | 2 | 0.073 | 1 | JB | 2 |
| ARSENIC | 7440-38-2 | 50000 | ug/l | 0.3 | 1 | B | 1 | 60 | 1 | | 1 | 0.82 | 1 | JB | 1 | 0.71 | 1 | B | 1 | 0.5 | 1 | B | 1 | 19 | 1 | J | 1 | 2.4 | 1 | | 1 | 1.3 | 1 | | 1 |
| BARIUM | 7440-39-3 | 2000000 | ug/l | 12.3 | 1 | | 10 | 159 | 1 | | 10 | 45.7 | 1 | | 10 | 46.5 | 1 | | 10 | 46.9 | 1 | | 10 | 136 | 1 | | 10 | 72.9 | 1 | | 10 | 55.3 | 1 | | 10 |
| BERYLLIUM | 7440-41-7 | 4000 | ug/l | ND | 1 | | 1 | ND | 1 | | 1 | ND | 1 | | 1 | ND | 1 | | 1 | ND | 1 | | 1 | ND | 1 | | 1 | ND | 1 | | 1 | ND | 1 | | 1 |
| CADMIUM | 7440-43-9 | 5000 | ug/l | ND | 1 | | 1 | 0.13 | 1 | JB | 1 | ND | 1 | | 1 | 0.13 | 1 | JB | 1 | 0.17 | 1 | JB | 1 | ND | 1 | | 1 | 0.11 | 1 | B | 1 | 0.53 | 1 | B | 1 |
| CHROMIUM | 7440-47-3 | 100000 | ug/l | 3.5 | 1 | J | 2 | 2.8 | 1 | J | 2 | 4.8 | 1 | J | 2 | 3.3 | 1 | J | 2 | 3.8 | 1 | J | 2 | 4.3 | 1 | J | 2 | 4 | 1 | J | 2 | 3.6 | 1 | J | 2 |
| COBALT | 7440-48-4 | 2000000 | ug/l | 1 | 1 | | 0.5 | 1.1 | 1 | | 0.5 | 0.8 | 1 | | 0.5 | 0.89 | 1 | | 0.5 | 0.9 | 1 | | 0.5 | 0.26 | 1 | B | 0.5 | 1.4 | 1 | | 0.5 | 0.72 | 1 | | 0.5 |
| COPPER | 7440-50-8 | 1000000 | ug/l | 0.49 | 1 | B | 2 | 0.7 | 1 | B | 2 | 1.4 | 1 | B | 2 | 0.81 | 1 | B | 2 | 0.73 | 1 | B | 2 | 0.72 | 1 | B | 2 | 0.88 | 1 | B | 2 | 2.9 | 1 | | 2 |
| LEAD | 7439-92-1 | 5000 | ug/l | 0.055 | 1 | B | 1 | 0.45 | 1 | B | 1 | ND | 1 | | 1 | ND | 1 | | 1 | ND | 1 | | 1 | ND | 1 | | 1 | 0.027 | 1 | B | 1 | 0.31 | 1 | B | 1 |
| MERCURY | 7439-97-6 | 2000 | ug/l | ND | 1 | | 0.2 | 0.023 | 1 | JB | 0.2 | 0.048 | 1 | JB | 0.2 | 0.046 | 1 | JB | 0.2 | 0.055 | 1 | JB | 0.2 | 0.044 | 1 | JB | 0.2 | 0.055 | 1 | JB | 0.2 | 0.04 | 1 | JB | 0.2 |
| NICKEL | 7440-02-0 | 100000 | ug/l | 1.3 | 1 | | 1 | 0.95 | 1 | B | 1 | 0.87 | 1 | B | 1 | 1.5 | 1 | | 1 | 1.5 | 1 | | 1 | 3.1 | 1 | | 1 | 1.4 | 1 | | 1 | 2.4 | 1 | | 1 |
| SELENIUM | 7782-49-2 | 50000 | ug/l | ND | 1 | | 5 | 0.89 | 1 | B | 5 | 2.1 | 1 | JB | 5 | 0.57 | 1 | B | 5 | ND | 1 | | 5 | 2.7 | 1 | JB | 5 | 4.2 | 1 | B | 5 | 4.5 | 1 | B | 5 |
| SILVER | 7440-22-4 | 100000 | ug/l | ND | 1 | | 1 | ND | 1 | | 1 | ND | 1 | | 1 | ND | 1 | | 1 | ND | 1 | | 1 | ND | 1 | | 1 | ND | 1 | | 1 | ND | 1 | | 1 |
| THALLIUM | 7440-28-0 | 2000 | ug/l | 0.098 | 1 | B | 1 | ND | 1 | | 1 | ND | 1 | | 1 | 0.043 | 1 | JB | 1 | 0.044 | 1 | JB | 1 | ND | 1 | | 1 | ND | 1 | | 1 | 0.039 | 1 | B | 1 |
| TIN | 7440-31-5 | 61000000 | ug/l | 6.2 | 1 | J | 5 | 5.3 | 1 | J | 5 | 3.2 | 1 | JB | 5 | 2.8 | 1 | JB | 5 | 3.5 | 1 | JB | 5 | 3.8 | 1 | JB | 5 | 5.9 | 1 | J | 5 | 6 | 1 | J | 5 |
| VANADIUM (FUME OR DUST) | 7440-62-2 | 720000 | ug/l | ND | 1 | | 1 | 0.42 | 1 | B | 1 | ND | 1 | | 1 | ND | 1 | | 1 | ND | 1 | | 1 | 0.7 | 1 | B | 1 | ND | 1 | | 1 | ND | 1 | | 1 |
| ZINC | 7440-66-6 | 2000000 | ug/l | 4.3 | 1 | JB | 5 | 9.8 | 1 | | 5 | 4.3 | 1 | B | 5 | 5.5 | 1 | | 5 | 4.1 | 1 | B | 5 | 3.2 | 1 | B | 5 | 6.9 | 1 | | 5 | 15.6 | 1 | | 5 |

**Table 5**
**Summary of Groundwater Analytical Results - October 2008**
**Comparison to Pennsylvania Non-Residential Non-Use Aquifer Groundwater MSCs**
**U.S. Steel - RCRA Groundwater Sampling**
**Fairless Hills, Pennsylvania**

| | CAS No | PADEP Non-Residentail Non-Use Aquifer GW MSC | Location ID | MW5-23-42 | | | | MW5-25-27 | | | | MW5-25-27 | | | | MW5-26-52 | | | | MW5-27-17 | | | | MW5-28-31 | | | |
|---|---|---|---|---|---|---|---|---|---|---|---|---|---|---|---|---|---|---|---|---|---|---|---|---|---|---|---|
| | | | Sample ID | MW5-23-42_10-08-N | | | | DUP004-N | | | | MW5-25-27_10-08-N | | | | MW5-26-52_10-08-N | | | | MW5-27-17_10-08-N | | | | MW5-28-31_10-08-N | | | |
| | | | Sample Date | 10/17/2008 | | | | 10/20/2008 | | | | 10/20/2008 | | | | 10/20/2008 | | | | 10/17/2008 | | | | 10/17/2008 | | | |
| | | | Lab Id | C8J180168027 | | | | C8J220361010 | | | | C8J220361003 | | | | C8J220361004 | | | | C8J180168025 | | | | C8J180168024 | | | |
| ***RCRA APPENDIX IX VOLATILE ORGANIC COMPOUNDS (Method 8260)*** | | | | Result | DF | Q | RL | Result | DF | Q | RL | Result | DF | Q | RL | Result | DF | Q | RL | Result | DF | Q | RL | Result | DF | Q | RL |
| 1,1,1,2-TETRACHLOROETHANE | 630-20-6 | 7000 | ug/l | ND | 1 | | 1 | ND | 1 | | 1 | ND | 1 | | 1 | ND | 1 | | 1 | ND | 1 | | 1 | ND | 1 | | 1 |
| 1,1,1-TRICHLOROETHANE | 71-55-6 | 2000 | ug/l | ND | 1 | | 1 | ND | 1 | | 1 | ND | 1 | | 1 | ND | 1 | | 1 | ND | 1 | | 1 | ND | 1 | | 1 |
| 1,1,2,2-TETRACHLOROETHANE | 79-34-5 | 30 | ug/l | ND | 1 | | 1 | ND | 1 | | 1 | ND | 1 | | 1 | ND | 1 | | 1 | ND | 1 | | 1 | ND | 1 | | 1 |
| 1,1,2-TRICHLOROETHANE | 79-00-5 | 50 | ug/l | ND | 1 | | 1 | ND | 1 | | 1 | ND | 1 | | 1 | ND | 1 | | 1 | ND | 1 | | 1 | ND | 1 | | 1 |
| 1,1-DICHLOROETHANE | 75-34-3 | 1100 | ug/l | ND | 1 | | 1 | ND | 1 | | 1 | ND | 1 | | 1 | ND | 1 | | 1 | ND | 1 | | 1 | ND | 1 | | 1 |
| 1,1-DICHLOROETHYLENE | 75-35-4 | 70 | ug/l | ND | 1 | | 1 | ND | 1 | | 1 | ND | 1 | | 1 | ND | 1 | | 1 | ND | 1 | | 1 | ND | 1 | | 1 |
| 1,2,3-TRICHLOROPROPANE | 96-18-4 | 4000 | ug/l | ND | 1 | | 1 | ND | 1 | | 1 | ND | 1 | | 1 | ND | 1 | | 1 | ND | 1 | | 1 | ND | 1 | | 1 |
| 1,2-DIBROMO-3-CHLOROPROPANE (DBCP) | 96-12-8 | 20 | ug/l | ND | 1 | | 1 | ND | 1 | | 1 | ND | 1 | | 1 | ND | 1 | | 1 | ND | 1 | | 1 | ND | 1 | | 1 |
| 1,2-DIBROMOETHANE | 106-93-4 | 5 | ug/l | ND | 1 | | 1 | ND | 1 | | 1 | ND | 1 | | 1 | ND | 1 | | 1 | ND | 1 | | 1 | ND | 1 | | 1 |
| 1,2-DICHLOROETHANE | 107-06-2 | 50 | ug/l | ND | 1 | | 1 | ND | 1 | | 1 | ND | 1 | | 1 | ND | 1 | | 1 | ND | 1 | | 1 | ND | 1 | | 1 |
| 1,2-DICHLOROPROPANE | 78-87-5 | 50 | ug/l | ND | 1 | | 1 | ND | 1 | | 1 | ND | 1 | | 1 | ND | 1 | | 1 | ND | 1 | | 1 | ND | 1 | | 1 |
| 1,4-DIOXANE | 123-91-1 | 240 | ug/l | ND | 1 | | 200 | ND | 1 | | 200 | ND | 1 | | 200 | ND | 1 | | 200 | ND | 1 | | 200 | ND | 1 | | 200 |
| 2-BUTANONE (MEK) | 78-93-3 | 580000 | ug/l | ND | 1 | | 5 | ND | 1 | | 5 | ND | 1 | | 5 | ND | 1 | | 5 | ND | 1 | | 5 | ND | 1 | | 5 |
| 2-CHLOR-1,3-BUTADIENE | 126-99-8 | 4100 | ug/l | ND | 1 | | 1 | ND | 1 | | 1 | ND | 1 | | 1 | ND | 1 | | 1 | ND | 1 | | 1 | ND | 1 | | 1 |
| 2-METHYL-1-PROPANOL | 78-83-1 | 610000 | ug/l | ND | 1 | | 40 | ND | 1 | | 40 | ND | 1 | | 40 | ND | 1 | | 40 | ND | 1 | | 40 | ND | 1 | | 40 |
| 4-METHYL-2-PENTANONE (MIBK) | 108-10-1 | 41000 | ug/l | ND | 1 | | 5 | ND | 1 | | 5 | ND | 1 | | 5 | ND | 1 | | 5 | ND | 1 | | 5 | ND | 1 | | 5 |
| ACETONE | 67-64-1 | 100000 | ug/l | ND | 1 | | 5 | ND | 1 | | 5 | ND | 1 | | 5 | ND | 1 | | 5 | ND | 1 | | 5 | ND | 1 | | 5 |
| ACETONITRILE | 75-05-8 | 3500 | ug/l | ND | 1 | | 20 | ND | 1 | | 20 | ND | 1 | | 20 | ND | 1 | | 20 | ND | 1 | | 20 | ND | 1 | | 20 |
| ACROLEIN | 107-02-8 | 1.2 | ug/l | ND | 1 | | ***20*** | ND | 1 | | ***20*** | ND | 1 | | ***20*** | ND | 1 | | ***20*** | ND | 1 | | ***20*** | ND | 1 | | ***20*** |
| ACRYLONITRILE | 107-13-1 | 270 | ug/l | ND | 1 | | 20 | ND | 1 | | 20 | ND | 1 | | 20 | ND | 1 | | 20 | ND | 1 | | 20 | ND | 1 | | 20 |
| ALLYLCHLORIDE | 107-05-1 | 580 | ug/l | ND | 1 | | 1 | ND | 1 | | 1 | ND | 1 | | 1 | ND | 1 | | 1 | ND | 1 | | 1 | ND | 1 | | 1 |
| BENZENE | 71-43-2 | 500 | ug/l | ND | 1 | | 1 | ND | 1 | | 1 | ND | 1 | | 1 | ND | 1 | | 1 | ND | 1 | | 1 | ND | 1 | | 1 |
| BROMODICHLOROMETHANE | 75-27-4 | 100 | ug/l | ND | 1 | | 1 | ND | 1 | | 1 | ND | 1 | | 1 | ND | 1 | | 1 | ND | 1 | | 1 | ND | 1 | | 1 |
| BROMOMETHANE | 74-83-9 | 1000 | ug/l | ND | 1 | | 1 | ND | 1 | | 1 | ND | 1 | | 1 | ND | 1 | | 1 | ND | 1 | | 1 | ND | 1 | | 1 |
| CARBON DISULFIDE | 75-15-0 | 4100 | ug/l | ND | 1 | | 1 | ND | 1 | | 1 | ND | 1 | | 1 | ND | 1 | | 1 | ND | 1 | | 1 | ND | 1 | | 1 |
| CARBON TETRACHLORIDE | 56-23-5 | 50 | ug/l | ND | 1 | | 1 | ND | 1 | | 1 | ND | 1 | | 1 | ND | 1 | | 1 | ND | 1 | | 1 | ND | 1 | | 1 |
| CFC-11 | 75-69-4 | 200000 | ug/l | ND | 1 | | 1 | ND | 1 | | 1 | ND | 1 | | 1 | ND | 1 | | 1 | ND | 1 | | 1 | ND | 1 | | 1 |
| CFC-12 | 75-71-8 | 100000 | ug/l | ND | 1 | | 1 | ND | 1 | | 1 | ND | 1 | | 1 | ND | 1 | | 1 | ND | 1 | | 1 | ND | 1 | | 1 |
| CHLOROBENZENE | 108-90-7 | 10000 | ug/l | ND | 1 | | 1 | ND | 1 | | 1 | ND | 1 | | 1 | ND | 1 | | 1 | ND | 1 | | 1 | ND | 1 | | 1 |
| CHLORODIBROMOMETHANE | 124-48-1 | 10000 | ug/l | ND | 1 | | 1 | ND | 1 | | 1 | ND | 1 | | 1 | ND | 1 | | 1 | ND | 1 | | 1 | ND | 1 | | 1 |
| CHLOROETHANE | 75-00-3 | 90000 | ug/l | ND | 1 | | 1 | ND | 1 | | 1 | ND | 1 | | 1 | ND | 1 | | 1 | ND | 1 | | 1 | ND | 1 | | 1 |
| CHLOROFORM | 67-66-3 | 1000 | ug/l | ND | 1 | | 1 | ND | 1 | | 1 | ND | 1 | | 1 | ND | 1 | | 1 | ND | 1 | | 1 | ND | 1 | | 1 |
| CHLOROMETHANE | 74-87-3 | 300 | ug/l | ND | 1 | | 1 | ND | 1 | | 1 | ND | 1 | | 1 | ND | 1 | | 1 | ND | 1 | | 1 | ND | 1 | | 1 |
| CIS-1,3-DICHLOROPROPENE | 10061-01-5 | NS | ug/l | ND | 1 | | 1 | ND | 1 | | 1 | ND | 1 | | 1 | ND | 1 | | 1 | ND | 1 | | 1 | ND | 1 | | 1 |
| DIBROMOMETHANE | 74-95-3 | 20000 | ug/l | ND | 1 | | 1 | ND | 1 | | 1 | ND | 1 | | 1 | ND | 1 | | 1 | ND | 1 | | 1 | ND | 1 | | 1 |
| DICHLOROMETHANE | 75-09-2 | 500 | ug/l | ND | 1 | | 1 | ND | 1 | | 1 | ND | 1 | | 1 | ND | 1 | | 1 | ND | 1 | | 1 | ND | 1 | | 1 |
| ETHYL METHACRYLATE | 97-63-2 | 1800 | ug/l | ND | 1 | | 1 | ND | 1 | | 1 | ND | 1 | | 1 | ND | 1 | | 1 | ND | 1 | | 1 | ND | 1 | | 1 |
| ETHYLBENZENE | 100-41-4 | 70000 | ug/l | ND | 1 | | 1 | ND | 1 | | 1 | ND | 1 | | 1 | ND | 1 | | 1 | ND | 1 | | 1 | ND | 1 | | 1 |
| IODOMETHANE | 74-88-4 | 5 | ug/l | ND | 1 | | 1 | ND | 1 | | 1 | ND | 1 | | 1 | ND | 1 | | 1 | ND | 1 | | 1 | ND | 1 | | 1 |
| METHYL METHACRYLATE | 80-62-6 | 410000 | ug/l | ND | 1 | | 1 | ND | 1 | | 1 | ND | 1 | | 1 | ND | 1 | | 1 | ND | 1 | | 1 | ND | 1 | | 1 |
| METHYL N-BUTYL KETONE | 591-78-6 | 5 | ug/l | ND | 1 | | 5 | ND | 1 | | 5 | ND | 1 | | 5 | ND | 1 | | 5 | ND | 1 | | 5 | ND | 1 | | 5 |
| METHYLACRYLONITRILE | 126-98-7 | 4.1 | ug/l | ND | 1 | | 1 | ND | 1 | | 1 | ND | 1 | | 1 | ND | 1 | | 1 | ND | 1 | | 1 | ND | 1 | | 1 |
| PENTACHLOROETHANE | 76-01-7 | 5 | ug/l | ND | 1.19 | | 2.4 | ND | 1.12 | | 2.2 | ND | 1.19 | | 2.4 | ND | 1.16 | | 2.3 | ND | 1.04 | | 2.1 | ND | 1.05 | | 2.1 |
| PROPIONITRILE | 107-12-0 | 5 | ug/l | ND | 1 | | 2 | ND | 1 | | 2 | ND | 1 | | 2 | ND | 1 | | 2 | ND | 1 | | 2 | ND | 1 | | 2 |
| STYRENE (MONOMER) | 100-42-5 | 10000 | ug/l | ND | 1 | | 1 | ND | 1 | | 1 | ND | 1 | | 1 | ND | 1 | | 1 | ND | 1 | | 1 | ND | 1 | | 1 |
| TETRACHLOROETHENE | 127-18-4 | 50 | ug/l | ND | 1 | | 1 | ND | 1 | | 1 | ND | 1 | | 1 | ND | 1 | | 1 | ND | 1 | | 1 | ND | 1 | | 1 |
| TOLUENE | 108-88-3 | 100000 | ug/l | ND | 1 | | 1 | ND | 1 | | 1 | ND | 1 | | 1 | ND | 1 | | 1 | ND | 1 | | 1 | ND | 1 | | 1 |
| TRANS-1,2-DICHLOROETHENE | 156-60-5 | 1000 | ug/l | ND | 1 | | 1 | ND | 1 | | 1 | ND | 1 | | 1 | ND | 1 | | 1 | ND | 1 | | 1 | ND | 1 | | 1 |
| TRANS-1,3-DICHLOROPROPENE | 10061-02-6 | NS | ug/l | ND | 1 | | 1 | ND | 1 | | 1 | ND | 1 | | 1 | ND | 1 | | 1 | ND | 1 | | 1 | ND | 1 | | 1 |
| TRANS-1,4-DICHLOROBUTENE | 110-57-6 | 5 | ug/l | ND | 1 | | 1 | ND | 1 | | 1 | ND | 1 | | 1 | ND | 1 | | 1 | ND | 1 | | 1 | ND | 1 | | 1 |
| TRIBROMOMETHANE | 75-25-2 | 10000 | ug/l | ND | 1 | | 1 | ND | 1 | | 1 | ND | 1 | | 1 | ND | 1 | | 1 | ND | 1 | | 1 | ND | 1 | | 1 |
| TRICHLOROETHYLENE | 79-01-6 | 50 | ug/l | ND | 1 | | 1 | ND | 1 | | 1 | ND | 1 | | 1 | ND | 1 | | 1 | ND | 1 | | 1 | ND | 1 | | 1 |
| VINYL ACETATE | 108-05-4 | 1200 | ug/l | ND | 1 | | 1 | ND | 1 | | 1 | ND | 1 | | 1 | ND | 1 | | 1 | ND | 1 | | 1 | ND | 1 | | 1 |
| VINYL CHLORIDE | 75-01-4 | 20 | ug/l | ND | 1 | | 1 | ND | 1 | | 1 | ND | 1 | | 1 | ND | 1 | | 1 | ND | 1 | | 1 | ND | 1 | | 1 |
| XYLENE (TOTAL) | 1330-20-7 | 180000 | ug/l | ND | 1 | | 3 | ND | 1 | | 3 | ND | 1 | | 3 | ND | 1 | | 3 | ND | 1 | | 3 | ND | 1 | | 3 |

**Table 5**
**Summary of Groundwater Analytical Results - October 2008**
**Comparison to Pennsylvania Non-Residential Non-Use Aquifer Groundwater MSCs**
**U.S. Steel - RCRA Groundwater Sampling**
**Fairless Hills, Pennsylvania**

| | CAS No | PADEP Non-Residentail Non-Use Aquifer GW MSC | Location ID | MW5-23-42 | | | | MW5-25-27 | | | | MW5-25-27 | | | | MW5-26-52 | | | | MW5-27-17 | | | | MW5-28-31 | | | |
|---|---|---|---|---|---|---|---|---|---|---|---|---|---|---|---|---|---|---|---|---|---|---|---|---|---|---|---|
| | | | Sample ID | MW5-23-42_10-08-N | | | | DUP004-N | | | | MW5-25-27_10-08-N | | | | MW5-26-52_10-08-N | | | | MW5-27-17_10-08-N | | | | MW5-28-31_10-08-N | | | |
| | | | Sample Date | 10/17/2008 | | | | 10/20/2008 | | | | 10/20/2008 | | | | 10/20/2008 | | | | 10/17/2008 | | | | 10/17/2008 | | | |
| | | | Lab Id | C8J180168027 | | | | C8J220361010 | | | | C8J220361003 | | | | C8J220361004 | | | | C8J180168025 | | | | C8J180168024 | | | |
| ***RCRA APPENDIX IX SEMI-VOLATILE ORGANIC COMPOUNDS (Method 8270)*** | | | | Result | DF | Q | RL | Result | DF | Q | RL | Result | DF | Q | RL | Result | DF | Q | RL | Result | DF | Q | RL | Result | DF | Q | RL |
| 1,2,4,5-TETRACHLOROBENZENE | 95-94-3 | 580 | ug/l | ND | 1.19 | | 1.2 | ND | 1.12 | | 1.1 | ND | 1.19 | | 1.2 | ND | 1.16 | | 1.2 | ND | 1.04 | | 1 | ND | 1.05 | | 1 |
| 1,2,4-TRICHLOROBENZENE | 120-82-1 | 44000 | ug/l | ND | 1.19 | | 0.24 | ND | 1.12 | | 0.22 | ND | 1.19 | | 0.24 | ND | 1.16 | | 0.23 | ND | 1.04 | | 0.21 | ND | 1.05 | | 0.21 |
| 1,2-DICHLOROBENZENE | 95-50-1 | 60000 | ug/l | ND | 1.19 | | 0.24 | ND | 1.12 | | 0.22 | ND | 1.19 | | 0.24 | ND | 1.16 | | 0.23 | ND | 1.04 | | 0.21 | ND | 1.05 | | 0.21 |
| 1,3,5-TRINITROBENZENE | 99-35-4 | NS | ug/l | ND | 1.19 | | 1.2 | ND | 1.12 | | 1.1 | ND | 1.19 | | 1.2 | ND | 1.16 | | 1.2 | ND | 1.04 | | 1 | ND | 1.05 | | 1 |
| 1,4-DICHLOROBENZENE | 106-46-7 | 7500 | ug/l | ND | 1.19 | | 0.24 | ND | 1.12 | | 0.22 | ND | 1.19 | | 0.24 | ND | 1.16 | | 0.23 | ND | 1.04 | | 0.21 | ND | 1.05 | | 0.21 |
| 1,4-NAPHTHOQUINONE | 130-15-4 | 5 | ug/l | ND | 1.19 | | 1.2 | ND | 1.12 | | 1.1 | ND | 1.19 | | 1.2 | ND | 1.16 | | 1.2 | ND | 1.04 | | 1 | ND | 1.05 | | 1 |
| 1-NAPHTHYLAMINE | 134-32-7 | 1400 | ug/l | ND | 1.19 | | 1.2 | ND | 1.12 | | 1.1 | ND | 1.19 | | 1.2 | ND | 1.16 | | 1.2 | ND | 1.04 | | 1 | ND | 1.05 | | 1 |
| 2,4,5-TRICHLOROPHENOL | 95-95-4 | 1000000 | ug/l | ND | 1.19 | | 1.2 | ND | 1.12 | | 1.1 | 0.19 | 1.19 | J | 1.2 | 0.099 | 1.16 | J | 1.2 | ND | 1.04 | | 1 | ND | 1.05 | | 1 |
| 2,4,6-TRICHLOROPHENOL | 88-06-2 | 31000 | ug/l | ND | 1.19 | | 1.2 | ND | 1.12 | | 1.1 | 0.075 | 1.19 | J | 1.2 | 0.077 | 1.16 | J | 1.2 | ND | 1.04 | | 1 | ND | 1.05 | | 1 |
| 2,4-DICHLOROPHENOL | 120-83-2 | 20000 | ug/l | ND | 1.19 | | 0.24 | ND | 1.12 | | 0.22 | 0.11 | 1.19 | J | 0.24 | 0.085 | 1.16 | J | 0.23 | ND | 1.04 | | 0.21 | ND | 1.05 | | 0.21 |
| 2,4-DIMETHYLPHENOL | 105-67-9 | 2000000 | ug/l | ND | 1.19 | | 1.2 | ND | 1.12 | | 1.1 | ND | 1.19 | | 1.2 | ND | 1.16 | | 1.2 | ND | 1.04 | | 1 | ND | 1.05 | | 1 |
| 2,4-DINITROPHENOL | 51-28-5 | 410 | ug/l | ND | 1.19 | | 6 | ND | 1.12 | | 5.6 | ND | 1.19 | | 6 | ND | 1.16 | | 5.8 | ND | 1.04 | | 5.2 | ND | 1.05 | | 5.2 |
| 2,4-DINITROTOLUENE | 121-14-2 | 8400 | ug/l | ND | 1.19 | | 1.2 | ND | 1.12 | | 1.1 | ND | 1.19 | | 1.2 | 0.1 | 1.16 | J | 1.2 | ND | 1.04 | | 1 | ND | 1.05 | | 1 |
| 2,6-DICHLOROPHENOL | 87-65-0 | NS | ug/l | ND | 1.19 | | 0.24 | ND | 1.12 | | 0.22 | ND | 1.19 | | 0.24 | ND | 1.16 | | 0.23 | ND | 1.04 | | 0.21 | ND | 1.05 | | 0.21 |
| 2,6-DINITROTOLUENE | 606-20-2 | 100000 | ug/l | ND | 1.19 | | 1.2 | ND | 1.12 | | 1.1 | 0.18 | 1.19 | J | 1.2 | 0.064 | 1.16 | J | 1.2 | ND | 1.04 | | 1 | ND | 1.05 | | 1 |
| 2-ACETYLAMINOFLUORENE | 53-96-3 | 680 | ug/l | ND | 1.19 | | 1.2 | ND | 1.12 | | 1.1 | ND | 1.19 | | 1.2 | ND | 1.16 | | 1.2 | ND | 1.04 | | 1 | ND | 1.05 | | 1 |
| 2-CHLORONAPHTHALENE | 91-58-7 | 8200 | ug/l | ND | 1.19 | | 0.24 | ND | 1.12 | | 0.22 | ND | 1.19 | | 0.24 | ND | 1.16 | | 0.23 | ND | 1.04 | | 0.21 | ND | 1.05 | | 0.21 |
| 2-CHLOROPHENOL | 95-57-8 | 40 | ug/l | ND | 1.19 | | 1.2 | ND | 1.12 | | 1.1 | 0.055 | 1.19 | J | 1.2 | ND | 1.16 | | 1.2 | ND | 1.04 | | 1 | ND | 1.05 | | 1 |
| 2-METHYL PYRIDINE (2-PICOLINE) | 109-06-8 | 5 | ug/l | ND | 1.19 | | 1.2 | ND | 1.12 | | 1.1 | ND | 1.19 | | 1.2 | ND | 1.16 | | 1.2 | ND | 1.04 | | 1 | ND | 1.05 | | 1 |
| 2-METHYLNAPHTHALENE | 91-57-6 | 2000 | ug/l | ND | 1.19 | | 0.24 | ND | 1.12 | | 0.22 | ND | 1.19 | | 0.24 | ND | 1.16 | | 0.23 | ND | 1.04 | | 0.21 | ND | 1.05 | | 0.21 |
| 2-METHYLPHENOL | 95-48-7 | 510000 | ug/l | ND | 1.19 | | 1.2 | ND | 1.12 | | 1.1 | 0.071 | 1.19 | J | 1.2 | ND | 1.16 | | 1.2 | ND | 1.04 | | 1 | ND | 1.05 | | 1 |
| 2-NAPHTHALENAMINE (2-NAPHTHYLAMINE) | 91-59-8 | 1400 | ug/l | ND | 1.19 | | 1.2 | ND | 1.12 | | 1.1 | ND | 1.19 | | 1.2 | ND | 1.16 | | 1.2 | ND | 1.04 | | 1 | ND | 1.05 | | 1 |
| 2-NITROANILINE | 88-74-4 | 5.8 | ug/l | ND | 1.19 | | ***6*** | ND | 1.12 | | 5.6 | 0.26 | 1.19 | J | ***6*** | 0.18 | 1.16 | J | 5.8 | ND | 1.04 | | 5.2 | ND | 1.05 | | 5.2 |
| 2-NITROPHENOL | 88-75-5 | 820000 | ug/l | ND | 1.19 | | 1.2 | ND | 1.12 | | 1.1 | ND | 1.19 | | 1.2 | ND | 1.16 | | 1.2 | ND | 1.04 | | 1 | ND | 1.05 | | 1 |
| 3,3'-DICHLOROBENZIDINE | 91-94-1 | 3100 | ug/l | ND | 1.19 | | 1.2 | 0.55 | 1.12 | J | 1.1 | ND | 1.19 | | 1.2 | ND | 1.16 | | 1.2 | ND | 1.04 | | 1 | ND | 1.05 | | 1 |
| 3,3'-DIMETHYLBENZIDINE | 119-93-7 | 280 | ug/l | ND | 1.19 | | 12 | ND | 1.12 | | 11 | ND | 1.19 | | 12 | ND | 1.16 | | 12 | ND | 1.04 | | 10 | ND | 1.05 | | 10 |
| 3,5,5-TRIMETHYL-2-CYCLOHEXENE-1-ONE | 78-59-1 | 100000 | ug/l | ND | 1.19 | | 1.2 | ND | 1.12 | | 1.1 | ND | 1.19 | | 1.2 | ND | 1.16 | | 1.2 | ND | 1.04 | | 1 | ND | 1.05 | | 1 |
| 3-METHYLCHLORANTHRENE | 56-49-5 | NS | ug/l | ND | 1.19 | | 1.2 | ND | 1.12 | | 1.1 | ND | 1.19 | | 1.2 | ND | 1.16 | | 1.2 | ND | 1.04 | | 1 | ND | 1.05 | | 1 |
| 3-Methylphenol & 4-Methylphenol | 65794-96-9 | NS | ug/l | ND | 1.19 | | 1.2 | ND | 1.12 | | 1.1 | 0.24 | 1.19 | J | 1.2 | 0.2 | 1.16 | J | 1.2 | ND | 1.04 | | 1 | ND | 1.05 | | 1 |
| 3-NITROANILINE | 99-09-2 | 5.8 | ug/l | ND | 1.19 | | ***6*** | 0.063 | 1.12 | J | 5.6 | 0.35 | 1.19 | J | ***6*** | 0.2 | 1.16 | J | 5.8 | ND | 1.04 | | 5.2 | 0.055 | 1.05 | J | 5.2 |
| 4,6-DINITRO-2-METHYLPHENOL | 534-52-1 | 5 | ug/l | ND | 1.19 | | ***6*** | ND | 1.12 | | ***5.6*** | ND | 1.19 | | ***6*** | ND | 1.16 | | ***5.8*** | ND | 1.04 | | ***5.2*** | ND | 1.05 | | ***5.2*** |
| 4-AMINOBIPHENYL | 92-67-1 | 120 | ug/l | ND | 1.19 | | 1.2 | ND | 1.12 | | 1.1 | ND | 1.19 | | 1.2 | ND | 1.16 | | 1.2 | ND | 1.04 | | 1 | ND | 1.05 | | 1 |
| 4-BROMOPHENYL PHENYL ETHER | 101-55-3 | 5 | ug/l | ND | 1.19 | | 1.2 | ND | 1.12 | | 1.1 | 0.065 | 1.19 | J | 1.2 | 0.072 | 1.16 | J | 1.2 | ND | 1.04 | | 1 | ND | 1.05 | | 1 |
| 4-CHLORO-3-METHYLPHENOL | 59-50-7 | 510 | ug/l | ND | 1.19 | | 1.2 | ND | 1.12 | | 1.1 | 0.16 | 1.19 | J | 1.2 | 0.12 | 1.16 | J | 1.2 | ND | 1.04 | | 1 | ND | 1.05 | | 1 |
| 4-CHLOROPHENYL PHENYL ETHER | 7005-72-3 | 5 | ug/l | ND | 1.19 | | 1.2 | ND | 1.12 | | 1.1 | ND | 1.19 | | 1.2 | 0.067 | 1.16 | J | 1.2 | ND | 1.04 | | 1 | ND | 1.05 | | 1 |
| 4-DIMETHYLAMINOAZOBENZENE | 60-11-7 | 570 | ug/l | ND | 1.19 | | 1.2 | ND | 1.12 | | 1.1 | ND | 1.19 | | 1.2 | ND | 1.16 | | 1.2 | ND | 1.04 | | 1 | ND | 1.05 | | 1 |
| 4-NITROPHENOL | 100-02-7 | 60000 | ug/l | ND | 1.19 | | 6 | ND | 1.12 | | 5.6 | 1.4 | 1.19 | J | 6 | 0.96 | 1.16 | J | 5.8 | ND | 1.04 | | 5.2 | ND | 1.05 | | 5.2 |
| 4-NITROQUINOLINE-N-OXIDE | 56-57-5 | 5 | ug/l | ND | 1.19 | | ***12*** | ND | 1.12 | | ***11*** | ND | 1.19 | | ***12*** | ND | 1.16 | | ***12*** | ND | 1.04 | | ***10*** | ND | 1.05 | | ***10*** |
| 5-NITRO-O-TOLUIDINE | 99-55-8 | NS | ug/l | ND | 1.19 | | 12 | ND | 1.12 | | 11 | ND | 1.19 | | 12 | ND | 1.16 | | 12 | ND | 1.04 | | 10 | ND | 1.05 | | 10 |
| 7,12-DIMETHYLBENZ(A)ANTHRACENE | 57-97-6 | NS | ug/l | ND | 1.19 | | 1.2 | ND | 1.12 | | 1.1 | ND | 1.19 | | 1.2 | ND | 1.16 | | 1.2 | ND | 1.04 | | 1 | ND | 1.05 | | 1 |
| a,a-Dimethylphenethylamine | 122-09-8 | 5 | ug/l | ND | 1.19 | | 1.2 | ND | 1.12 | | 1.1 | ND | 1.19 | | 1.2 | ND | 1.16 | | 1.2 | ND | 1.04 | | 1 | ND | 1.05 | | 1 |
| ACENAPHTHENE | 83-32-9 | 3800 | ug/l | ND | 1.19 | | 0.24 | ND | 1.12 | | 0.22 | ND | 1.19 | | 0.24 | ND | 1.16 | | 0.23 | ND | 1.04 | | 0.21 | ND | 1.05 | | 0.21 |
| ACENAPHTHYLENE | 208-96-8 | 16000 | ug/l | ND | 1.19 | | 0.24 | ND | 1.12 | | 0.22 | ND | 1.19 | | 0.24 | ND | 1.16 | | 0.23 | ND | 1.04 | | 0.21 | ND | 1.05 | | 0.21 |
| ACETOPHENONE | 98-86-2 | 10000 | ug/l | ND | 1.19 | | 1.2 | ND | 1.12 | | 1.1 | ND | 1.19 | | 1.2 | ND | 1.16 | | 1.2 | ND | 1.04 | | 1 | ND | 1.05 | | 1 |
| ANILINE | 62-53-3 | 5.8 | ug/l | ND | 1.19 | | 1.2 | 0.062 | 1.12 | J | 1.1 | 0.11 | 1.19 | J | 1.2 | 0.13 | 1.16 | J | 1.2 | ND | 1.04 | | 1 | ND | 1.05 | | 1 |
| ANTHRACENE | 120-12-7 | 66 | ug/l | ND | 1.19 | | 0.24 | 0.38 | 1.12 | | 0.22 | 0.51 | 1.19 | | 0.24 | 0.47 | 1.16 | | 0.23 | ND | 1.04 | | 0.21 | ND | 1.05 | | 0.21 |
| ARAMITE | 140-57-8 | NS | ug/l | ND | 1.19 | | 1.2 | ND | 1.12 | | 1.1 | ND | 1.19 | | 1.2 | ND | 1.16 | | 1.2 | ND | 1.04 | | 1 | ND | 1.05 | | 1 |
| BENZO(A)ANTHRACENE | 56-55-3 | 11 | ug/l | ND | 1.19 | | 0.24 | ND | 1.12 | | 0.22 | 0.28 | 1.19 | | 0.24 | 0.21 | 1.16 | J | 0.23 | ND | 1.04 | | 0.21 | ND | 1.05 | | 0.21 |
| BENZO(A)PYRENE | 50-32-8 | 3.8 | ug/l | ND | 1.19 | | 0.24 | ND | 1.12 | | 0.22 | 0.63 | 1.19 | | 0.24 | 0.55 | 1.16 | | 0.23 | ND | 1.04 | | 0.21 | ND | 1.05 | | 0.21 |
| BENZO(B)FLUORANTHENE | 205-99-2 | 1.2 | ug/l | ND | 1.19 | | 0.24 | ND | 1.12 | | 0.22 | 1.1 | 1.19 | | 0.24 | 1 | 1.16 | | 0.23 | ND | 1.04 | | 0.21 | ND | 1.05 | | 0.21 |
| BENZO(GHI)PERYLENE | 191-24-2 | 0.26 | ug/l | ND | 1.19 | | 0.24 | ND | 1.12 | | 0.22 | **0.9** | 1.19 | | 0.24 | **0.87** | 1.16 | | 0.23 | ND | 1.04 | | 0.21 | ND | 1.05 | | 0.21 |
| BENZO(K)FLUORANTHENE | 207-08-9 | 0.55 | ug/l | ND | 1.19 | | 0.24 | ND | 1.12 | | 0.22 | **0.7** | 1.19 | | 0.24 | **0.64** | 1.16 | | 0.23 | ND | 1.04 | | 0.21 | ND | 1.05 | | 0.21 |
| BENZYL ALCOHOL | 100-51-6 | 31000 | ug/l | ND | 1.19 | | 1.2 | ND | 1.12 | | 1.1 | ND | 1.19 | | 1.2 | ND | 1.16 | | 1.2 | ND | 1.04 | | 1 | ND | 1.05 | | 1 |
| BENZYL BUTYL PHTHALATE | 85-68-7 | 2700 | ug/l | 0.2 | 1.19 | J | 1.2 | 0.16 | 1.12 | JB | 1.1 | 0.58 | 1.19 | JB | 1.2 | 0.34 | 1.16 | JB | 1.2 | 0.15 | 1.04 | J | 1 | 0.14 | 1.05 | J | 1 |
| BIS(2-CHLORO-1-METHYLETHYL) ETHER | 108-60-1 | 30000 | ug/l | ND | 1.19 | | 0.24 | ND | 1.12 | | 0.22 | ND | 1.19 | | 0.24 | ND | 1.16 | | 0.23 | ND | 1.04 | | 0.21 | ND | 1.05 | | 0.21 |
| BIS(2-CHLOROETHOXY)METHANE | 111-91-1 | 5 | ug/l | ND | 1.19 | | 1.2 | ND | 1.12 | | 1.1 | ND | 1.19 | | 1.2 | ND | 1.16 | | 1.2 | ND | 1.04 | | 1 | ND | 1.05 | | 1 |
| BIS(2-CHLOROETHYL) ETHER | 111-44-4 | 55 | ug/l | ND | 1.19 | | 0.24 | ND | 1.12 | | 0.22 | 0.089 | 1.19 | J | 0.24 | ND | 1.16 | | 0.23 | ND | 1.04 | | 0.21 | ND | 1.05 | | 0.21 |
| BIS(2-ETHYLHEXYL)PHTHALATE | 117-81-7 | 290 | ug/l | 0.64 | 1.19 | J | 1.2 | 0.87 | 1.12 | J | 1.1 | 0.92 | 1.19 | J | 1.2 | 0.62 | 1.16 | J | 1.2 | ND | 1.04 | | 1 | ND | 1.05 | | 1 |
| CHLORDECONE (KEPONE) | 143-50-0 | 160 | ug/l | ND | 1.19 | | 4.8 | ND | 1.12 | | 4.5 | ND | 1.19 | | 4.8 | ND | 1.16 | | 4.6 | ND | 1.04 | | 4.2 | ND | 1.05 | | 4.2 |

**Table 5**
**Summary of Groundwater Analytical Results - October 2008**
**Comparison to Pennsylvania Non-Residential Non-Use Aquifer Groundwater MSCs**
**U.S. Steel - RCRA Groundwater Sampling**
**Fairless Hills, Pennsylvania**

| | CAS No | PADEP Non-Residentail Non-Use Aquifer GW MSC | Location ID | MW5-23-42 | | | | MW5-25-27 | | | | MW5-25-27 | | | | MW5-26-52 | | | | MW5-27-17 | | | | MW5-28-31 | | | |
|---|---|---|---|---|---|---|---|---|---|---|---|---|---|---|---|---|---|---|---|---|---|---|---|---|---|---|---|
| | | | Sample ID | MW5-23-42_10-08-N | | | | DUP004-N | | | | MW5-25-27_10-08-N | | | | MW5-26-52_10-08-N | | | | MW5-27-17_10-08-N | | | | MW5-28-31_10-08-N | | | |
| | | | Sample Date | 10/17/2008 | | | | 10/20/2008 | | | | 10/20/2008 | | | | 10/20/2008 | | | | 10/17/2008 | | | | 10/17/2008 | | | |
| | | | Lab Id | C8J180168027 | | | | C8J220361010 | | | | C8J220361003 | | | | C8J220361004 | | | | C8J180168025 | | | | C8J180168024 | | | |
| ***RCRA APPENDIX IX SEMI-VOLATILE ORGANIC COMPOUNDS (Method 8270)*** | | | | Result | DF | Q | RL | **Result** | DF | Q | RL | Result | DF | Q | RL | Result | DF | Q | RL | Result | DF | Q | RL | Result | DF | Q | RL |
| CHLOROBENZILATE | 510-15-6 | 9600 | ug/l | ND | 1.19 | | 1.2 | ND | 1.12 | | 1.1 | ND | 1.19 | | 1.2 | ND | 1.16 | | 1.2 | ND | 1.04 | | 1 | ND | 1.05 | | 1 |
| CHLOROPHENOLS | 58-90-2 | 61000 | ug/l | ND | 1.19 | | 1.2 | ND | 1.12 | | 1.1 | 0.15 | 1.19 | J | 1.2 | ND | 1.16 | | 1.2 | ND | 1.04 | | 1 | ND | 1.05 | | 1 |
| CHRYSENE | 218-01-9 | 1.9 | ug/l | ND | 1.19 | | 0.24 | 0.061 | 1.12 | J | 0.22 | 0.27 | 1.19 | | 0.24 | 0.21 | 1.16 | J | 0.23 | ND | 1.04 | | 0.21 | ND | 1.05 | | 0.21 |
| CYGON | 60-51-5 | 20000 | ug/l | ND | 1.19 | | 1.2 | ND | 1.12 | | 1.1 | ND | 1.19 | | 1.2 | ND | 1.16 | | 1.2 | ND | 1.04 | | 1 | ND | 1.05 | | 1 |
| DIALLATE | 2303-16-4 | 1000 | ug/l | ND | 1.19 | | 1.2 | ND | 1.12 | | 1.1 | ND | 1.19 | | 1.2 | ND | 1.16 | | 1.2 | ND | 1.04 | | 1 | ND | 1.05 | | 1 |
| DIBENZO(A,H)ANTHRACENE | 53-70-3 | 0.6 | ug/l | ND | 1.19 | | 0.24 | ND | 1.12 | | 0.22 | ND | 1.19 | | 0.24 | **1.2** | 1.16 | | 0.23 | ND | 1.04 | | 0.21 | ND | 1.05 | | 0.21 |
| DIBENZOFURAN | 132-64-9 | 5 | ug/l | ND | 1.19 | | 1.2 | ND | 1.12 | | 1.1 | ND | 1.19 | | 1.2 | 0.083 | 1.16 | J | 1.2 | ND | 1.04 | | 1 | ND | 1.05 | | 1 |
| DIETHYL PHTHALATE | 84-66-2 | 1100000 | ug/l | ND | 1.19 | | 1.2 | ND | 1.12 | | 1.1 | ND | 1.19 | | 1.2 | ND | 1.16 | | 1.2 | ND | 1.04 | | 1 | ND | 1.05 | | 1 |
| DIMETHYL PHTHALATE | 131-11-3 | 5 | ug/l | ND | 1.19 | | 1.2 | ND | 1.12 | | 1.1 | ND | 1.19 | | 1.2 | 0.077 | 1.16 | J | 1.2 | ND | 1.04 | | 1 | ND | 1.05 | | 1 |
| DI-N-BUTYL PHTHALATE | 84-74-2 | 400000 | ug/l | 0.11 | 1.19 | J | 1.2 | 0.16 | 1.12 | JB | 1.1 | 0.31 | 1.19 | JB | 1.2 | 0.3 | 1.16 | JB | 1.2 | 0.14 | 1.04 | J | 1 | 0.081 | 1.05 | J | 1 |
| DINITROBUTYL PHENOL | 88-85-7 | 700 | ug/l | ND | 1.19 | | 1.2 | ND | 1.12 | | 1.1 | ND | 1.19 | | 1.2 | ND | 1.16 | | 1.2 | ND | 1.04 | | 1 | ND | 1.05 | | 1 |
| DI-N-OCTYL PHTHALATE | 117-84-0 | 3000 | ug/l | 0.46 | 1.19 | J | 1.2 | 0.74 | 1.12 | J | 1.1 | 0.93 | 1.19 | J | 1.2 | 0.84 | 1.16 | J | 1.2 | ND | 1.04 | | 1 | ND | 1.05 | | 1 |
| DISULFOTON | 298-04-4 | 30 | ug/l | ND | 1.19 | | 1.2 | ND | 1.12 | | 1.1 | ND | 1.19 | | 1.2 | ND | 1.16 | | 1.2 | ND | 1.04 | | 1 | ND | 1.05 | | 1 |
| ETHYL METHANESULFONATE | 62-50-0 | 5 | ug/l | ND | 1.19 | | 1.2 | ND | 1.12 | | 1.1 | ND | 1.19 | | 1.2 | ND | 1.16 | | 1.2 | ND | 1.04 | | 1 | ND | 1.05 | | 1 |
| ETHYL PARATHION (PARATHION) | 56-38-2 | 610 | ug/l | ND | 1.19 | | 1.2 | ND | 1.12 | | 1.1 | ND | 1.19 | | 1.2 | ND | 1.16 | | 1.2 | ND | 1.04 | | 1 | ND | 1.05 | | 1 |
| FAMPHUR | 52-85-7 | 5 | ug/l | ND | 1.19 | | ***12*** | ND | 1.12 | | ***11*** | ND | 1.19 | | ***12*** | ND | 1.16 | | ***12*** | ND | 1.04 | | ***10*** | ND | 1.05 | | ***10*** |
| FLUORANTHENE | 206-44-0 | 260 | ug/l | ND | 1.19 | | 0.24 | 0.48 | 1.12 | | 0.22 | 0.61 | 1.19 | | 0.24 | 0.6 | 1.16 | | 0.23 | 0.4 | 1.04 | | 0.21 | 0.39 | 1.05 | | 0.21 |
| FLUORENE | 86-73-7 | 1900 | ug/l | ND | 1.19 | | 0.24 | 0.43 | 1.12 | | 0.22 | 0.48 | 1.19 | | 0.24 | 0.47 | 1.16 | | 0.23 | ND | 1.04 | | 0.21 | ND | 1.05 | | 0.21 |
| HEXACHLORO-1,3-BUTADIENE | 87-68-3 | 1000 | ug/l | ND | 1.19 | | 0.24 | ND | 1.12 | | 0.22 | ND | 1.19 | | 0.24 | ND | 1.16 | | 0.23 | ND | 1.04 | | 0.21 | ND | 1.05 | | 0.21 |
| HEXACHLOROBENZENE | 118-74-1 | 6 | ug/l | ND | 1.19 | | 0.24 | ND | 1.12 | | 0.22 | ND | 1.19 | | 0.24 | 0.063 | 1.16 | J | 0.23 | ND | 1.04 | | 0.21 | ND | 1.05 | | 0.21 |
| HEXACHLOROCYCLOPENTADIENE | 77-47-4 | 1800 | ug/l | ND | 1.19 | | 1.2 | ND | 1.12 | | 1.1 | ND | 1.19 | | 1.2 | ND | 1.16 | | 1.2 | ND | 1.04 | | 1 | ND | 1.05 | | 1 |
| HEXACHLOROETHANE | 67-72-1 | 100 | ug/l | ND | 1.19 | | 1.2 | ND | 1.12 | | 1.1 | ND | 1.19 | | 1.2 | ND | 1.16 | | 1.2 | ND | 1.04 | | 1 | ND | 1.05 | | 1 |
| HEXACHLOROPHENE (HCP) | 70-30-4 | NS | ug/l | ND | - | | 0 | ND | - | | 0 | ND | - | | 0 | ND | - | | 0 | ND | - | | 0 | ND | - | | 0 |
| HEXACHLOROPROPENE | 1888-71-7 | 5 | ug/l | ND | 1.19 | | 1.2 | ND | 1.12 | | 1.1 | ND | 1.19 | | 1.2 | ND | 1.16 | | 1.2 | ND | 1.04 | | 1 | ND | 1.05 | | 1 |
| INDENO(1,2,3-CD)PYRENE | 193-39-5 | 62 | ug/l | ND | 1.19 | | 0.24 | ND | 1.12 | | 0.22 | 1.1 | 1.19 | | 0.24 | 1.1 | 1.16 | | 0.23 | ND | 1.04 | | 0.21 | ND | 1.05 | | 0.21 |
| ISODRIN | 465-73-6 | 5 | ug/l | ND | 1.19 | | 1.2 | ND | 1.12 | | 1.1 | ND | 1.19 | | 1.2 | ND | 1.16 | | 1.2 | ND | 1.04 | | 1 | ND | 1.05 | | 1 |
| ISOSAFROLE | 120-58-1 | 5 | ug/l | ND | 1.19 | | 1.2 | ND | 1.12 | | 1.1 | ND | 1.19 | | 1.2 | ND | 1.16 | | 1.2 | ND | 1.04 | | 1 | ND | 1.05 | | 1 |
| M-DICHLOROBENZENE | 541-73-1 | 60000 | ug/l | ND | 1.19 | | 0.24 | ND | 1.12 | | 0.22 | ND | 1.19 | | 0.24 | ND | 1.16 | | 0.23 | ND | 1.04 | | 0.21 | ND | 1.05 | | 0.21 |
| M-DINITROBENZENE | 99-65-0 | 1000 | ug/l | ND | 1.19 | | 1.2 | ND | 1.12 | | 1.1 | ND | 1.19 | | 1.2 | ND | 1.16 | | 1.2 | ND | 1.04 | | 1 | ND | 1.05 | | 1 |
| METHANAMINE, N-METHYL-N-NITROSO | 62-75-9 | 0.13 | ug/l | ND | 1.19 | | ***1.2*** | ND | 1.12 | | ***1.1*** | ND | 1.19 | | ***1.2*** | ND | 1.16 | | ***1.2*** | ND | 1.04 | | ***1*** | ND | 1.05 | | ***1*** |
| METHAPYRILENE | 91-80-5 | NS | ug/l | ND | 1.19 | | 1.2 | ND | 1.12 | | 1.1 | ND | 1.19 | | 1.2 | ND | 1.16 | | 1.2 | ND | 1.04 | | 1 | ND | 1.05 | | 1 |
| METHYL METHANESULFONATE | 66-27-3 | 26 | ug/l | ND | 1.19 | | 1.2 | ND | 1.12 | | 1.1 | ND | 1.19 | | 1.2 | ND | 1.16 | | 1.2 | ND | 1.04 | | 1 | ND | 1.05 | | 1 |
| METHYL PARATHION | 298-00-0 | 200 | ug/l | ND | 1.19 | | 1.2 | ND | 1.12 | | 1.1 | ND | 1.19 | | 1.2 | ND | 1.16 | | 1.2 | ND | 1.04 | | 1 | ND | 1.05 | | 1 |
| NAPHTHALENE | 91-20-3 | 30000 | ug/l | ND | 1.19 | | 0.24 | ND | 1.12 | | 0.22 | ND | 1.19 | | 0.24 | 0.051 | 1.16 | J | 0.23 | ND | 1.04 | | 0.21 | ND | 1.05 | | 0.21 |
| NITROBENZENE | 98-95-3 | 51000 | ug/l | ND | 1.19 | | 0.24 | ND | 1.12 | | 0.22 | ND | 1.19 | | 0.24 | ND | 1.16 | | 0.23 | ND | 1.04 | | 0.21 | ND | 1.05 | | 0.21 |
| N-NITROSODIETHYLAMINE | 55-18-5 | 0.043 | ug/l | ND | 1.19 | | ***1.2*** | ND | 1.12 | | ***1.1*** | ND | 1.19 | | ***1.2*** | ND | 1.16 | | ***1.2*** | ND | 1.04 | | ***1*** | ND | 1.05 | | ***1*** |
| N-NITROSODI-N-BUTYLAMINE | 924-16-3 | 11 | ug/l | ND | 1.19 | | 1.2 | ND | 1.12 | | 1.1 | ND | 1.19 | | 1.2 | ND | 1.16 | | 1.2 | ND | 1.04 | | 1 | ND | 1.05 | | 1 |
| N-NITROSODI-N-PROPYLAMINE | 621-64-7 | 370 | ug/l | ND | 1.19 | | 0.24 | ND | 1.12 | | 0.22 | ND | 1.19 | | 0.24 | 0.091 | 1.16 | J | 0.23 | ND | 1.04 | | 0.21 | ND | 1.05 | | 0.21 |
| N-NITROSODIPHENYLAMINE | 86-30-6 | 35000 | ug/l | ND | 1.19 | | 0.24 | ND | 1.12 | | 0.22 | 0.14 | 1.19 | J | 0.24 | 0.089 | 1.16 | J | 0.23 | ND | 1.04 | | 0.21 | ND | 1.05 | | 0.21 |
| N-NITROSOMETHYLETHYLAMINE | 10595-95-6 | NS | ug/l | ND | 1.19 | | 1.2 | ND | 1.12 | | 1.1 | ND | 1.19 | | 1.2 | ND | 1.16 | | 1.2 | ND | 1.04 | | 1 | ND | 1.05 | | 1 |
| N-NITROSOMORPHOLINE | 59-89-2 | NS | ug/l | ND | 1.19 | | 1.2 | ND | 1.12 | | 1.1 | ND | 1.19 | | 1.2 | ND | 1.16 | | 1.2 | ND | 1.04 | | 1 | ND | 1.05 | | 1 |
| N-NITROSOPIPERIDINE | 100-75-4 | NS | ug/l | ND | 1.19 | | 1.2 | ND | 1.12 | | 1.1 | ND | 1.19 | | 1.2 | ND | 1.16 | | 1.2 | ND | 1.04 | | 1 | ND | 1.05 | | 1 |
| N-NITROSOPYRROLIDINE | 930-55-2 | NS | ug/l | ND | 1.19 | | 1.2 | ND | 1.12 | | 1.1 | ND | 1.19 | | 1.2 | ND | 1.16 | | 1.2 | ND | 1.04 | | 1 | ND | 1.05 | | 1 |
| O,O,O-TRIETHYL PHOSPHOROTHIOATE | 126-68-1 | 5 | ug/l | ND | 1.19 | | 1.2 | ND | 1.12 | | 1.1 | ND | 1.19 | | 1.2 | ND | 1.16 | | 1.2 | ND | 1.04 | | 1 | ND | 1.05 | | 1 |
| O,O-DIETHYL O-PYRAZINYL PHOSPHOROTHIOATE | 297-97-2 | 5 | ug/l | ND | 1.19 | | 1.2 | ND | 1.12 | | 1.1 | ND | 1.19 | | 1.2 | ND | 1.16 | | 1.2 | ND | 1.04 | | 1 | ND | 1.05 | | 1 |
| O-TOLUIDINE | 95-53-4 | 11000 | ug/l | ND | 1.19 | | 1.2 | ND | 1.12 | | 1.1 | ND | 1.19 | | 1.2 | ND | 1.16 | | 1.2 | ND | 1.04 | | 1 | ND | 1.05 | | 1 |
| P-CHLOROANILINE | 106-47-8 | 410 | ug/l | ND | 1.19 | | 1.2 | 0.079 | 1.12 | J | 1.1 | 0.28 | 1.19 | J | 1.2 | 0.2 | 1.16 | J | 1.2 | ND | 1.04 | | 1 | 0.076 | 1.05 | J | 1 |
| PENTACHLOROBENZENE | 608-93-5 | 740 | ug/l | ND | 1.19 | | 1.2 | ND | 1.12 | | 1.1 | ND | 1.19 | | 1.2 | ND | 1.16 | | 1.2 | ND | 1.04 | | 1 | ND | 1.05 | | 1 |
| PENTACHLORONITROBENZENE | 82-68-8 | 440 | ug/l | ND | 1.19 | | 1.2 | ND | 1.12 | | 1.1 | ND | 1.19 | | 1.2 | ND | 1.16 | | 1.2 | ND | 1.04 | | 1 | ND | 1.05 | | 1 |
| PENTACHLOROPHENOL | 87-86-5 | 1000 | ug/l | ND | 1.19 | | 1.2 | ND | 1.12 | | 1.1 | 1 | 1.19 | J | 1.2 | 0.76 | 1.16 | J | 1.2 | ND | 1.04 | | 1 | ND | 1.05 | | 1 |
| PHENACETIN | 62-44-2 | 760000 | ug/l | ND | 1.19 | | 1.2 | ND | 1.12 | | 1.1 | ND | 1.19 | | 1.2 | ND | 1.16 | | 1.2 | ND | 1.04 | | 1 | ND | 1.05 | | 1 |
| PHENANTHRENE | 85-01-8 | 1100 | ug/l | 0.084 | 1.19 | J | 0.24 | 0.085 | 1.12 | J | 0.22 | 0.19 | 1.19 | J | 0.24 | 0.18 | 1.16 | J | 0.23 | 0.097 | 1.04 | J | 0.21 | 0.059 | 1.05 | J | 0.21 |
| PHENOL | 108-95-2 | 400000 | ug/l | ND | 1.19 | | 0.24 | ND | 1.12 | | 0.22 | ND | 1.19 | | 0.24 | 0.13 | 1.16 | J | 0.23 | ND | 1.04 | | 0.21 | ND | 1.05 | | 0.21 |
| PHORATE | 298-02-2 | 4.1 | ug/l | ND | 1.19 | | 1.2 | ND | 1.12 | | 1.1 | ND | 1.19 | | 1.2 | ND | 1.16 | | 1.2 | ND | 1.04 | | 1 | ND | 1.05 | | 1 |
| P-NITROANILINE | 100-01-6 | 5.8 | ug/l | ND | 1.19 | | ***6*** | ND | 1.12 | | 5.6 | 0.36 | 1.19 | J | ***6*** | 0.2 | 1.16 | J | 5.8 | ND | 1.04 | | 5.2 | ND | 1.05 | | 5.2 |
| P-PHENYLENEDIAMINE | 106-50-3 | NS | ug/l | ND | 1.19 | | 48 | ND | 1.12 | | 45 | ND | 1.19 | | 48 | ND | 1.16 | | 46 | ND | 1.04 | | 42 | ND | 1.05 | | 42 |
| PROPYZAMIDE | 23950-58-5 | 50 | ug/l | ND | 1.19 | | 1.2 | ND | 1.12 | | 1.1 | ND | 1.19 | | 1.2 | ND | 1.16 | | 1.2 | ND | 1.04 | | 1 | ND | 1.05 | | 1 |
| PYRENE | 129-00-0 | 130 | ug/l | ND | 1.19 | | 0.24 | ND | 1.12 | | 0.22 | 0.25 | 1.19 | | 0.24 | 0.23 | 1.16 | | 0.23 | ND | 1.04 | | 0.21 | ND | 1.05 | | 0.21 |
| PYRIDINE | 110-86-1 | 200 | ug/l | ND | 1.19 | | 1.2 | ND | 1.12 | | 1.1 | ND | 1.19 | | 1.2 | 0.24 | 1.16 | J | 1.2 | ND | 1.04 | | 1 | ND | 1.05 | | 1 |
| SAFROLE | 94-59-7 | NS | ug/l | ND | 1.19 | | 1.2 | ND | 1.12 | | 1.1 | ND | 1.19 | | 1.2 | ND | 1.16 | | 1.2 | ND | 1.04 | | 1 | ND | 1.05 | | 1 |
| SULFOTEP | 3689-24-5 | 10 | ug/l | ND | 1.19 | | 1.2 | ND | 1.12 | | 1.1 | ND | 1.19 | | 1.2 | ND | 1.16 | | 1.2 | ND | 1.04 | | 1 | ND | 1.05 | | 1 |
| ***RCRA APPENDIX IX METALS - Dissolved (Method 6010/7471)*** | | | | Result | DF | Q | RL | Result | DF | Q | RL | Result | DF | Q | RL | Result | DF | Q | RL | Result | DF | Q | RL | Result | DF | Q | RL |
| ANTIMONY | 7440-36-0 | 6000 | ug/l | 0.13 | 1 | JB | 2 | ND | 1 | | 2 | 0.059 | 1 | B | 2 | ND | 1 | | 2 | 0.49 | 1 | JB | 2 | 0.087 | 1 | JB | 2 |
| ARSENIC | 7440-38-2 | 50000 | ug/l | 0.9 | 1 | B | 1 | 1.6 | 1 | | 1 | 1.1 | 1 | | 1 | 2.4 | 1 | | 1 | 0.3 | 1 | B | 1 | ND | 1 | | 1 |
| BARIUM | 7440-39-3 | 2000000 | ug/l | 52.8 | 1 | | 10 | 73.6 | 1 | | 10 | 73.6 | 1 | | 10 | 10.7 | 1 | | 10 | 66.4 | 1 | | 10 | 57.2 | 1 | | 10 |
| BERYLLIUM | 7440-41-7 | 4000 | ug/l | ND | 1 | | 1 | ND | 1 | | 1 | ND | 1 | | 1 | ND | 1 | | 1 | ND | 1 | | 1 | ND | 1 | | 1 |
| CADMIUM | 7440-43-9 | 5000 | ug/l | 0.22 | 1 | B | 1 | ND | 1 | | 1 | ND | 1 | | 1 | ND | 1 | | 1 | 0.18 | 1 | B | 1 | 0.11 | 1 | B | 1 |
| CHROMIUM | 7440-47-3 | 100000 | ug/l | 3.8 | 1 | J | 2 | 3.8 | 1 | J | 2 | 4.7 | 1 | J | 2 | 4.3 | 1 | J | 2 | 4.7 | 1 | J | 2 | 4.3 | 1 | J | 2 |
| COBALT | 7440-48-4 | 2000000 | ug/l | 3.3 | 1 | | 0.5 | 0.99 | 1 | | 0.5 | 0.95 | 1 | | 0.5 | 18.6 | 1 | | 0.5 | 1.2 | 1 | | 0.5 | 0.62 | 1 | | 0.5 |
| COPPER | 7440-50-8 | 1000000 | ug/l | 1.9 | 1 | B | 2 | 0.76 | 1 | B | 2 | 0.92 | 1 | B | 2 | 0.39 | 1 | B | 2 | 1.2 | 1 | B | 2 | 1.7 | 1 | B | 2 |
| LEAD | 7439-92-1 | 5000 | ug/l | 0.58 | 1 | B | 1 | 0.038 | 1 | B | 1 | 0.18 | 1 | B | 1 | 0.24 | 1 | B | 1 | 0.25 | 1 | B | 1 | 0.28 | 1 | B | 1 |
| MERCURY | 7439-97-6 | 2000 | ug/l | 0.062 | 1 | JB | 0.2 | ND | 1 | | 0.2 | ND | 1 | | 0.2 | ND | 1 | | 0.2 | 0.037 | 1 | JB | 0.2 | 0.035 | 1 | JB | 0.2 |
| NICKEL | 7440-02-0 | 100000 | ug/l | 11.8 | 1 | | 1 | 1.6 | 1 | | 1 | 2 | 1 | | 1 | 8.6 | 1 | | 1 | 2 | 1 | | 1 | 2.1 | 1 | | 1 |
| SELENIUM | 7782-49-2 | 50000 | ug/l | 2.7 | 1 | B | 5 | 1.4 | 1 | B | 5 | 1.2 | 1 | B | 5 | ND | 1 | | 5 | 1.2 | 1 | B | 5 | 1.1 | 1 | B | 5 |
| SILVER | 7440-22-4 | 100000 | ug/l | ND | 1 | | 1 | ND | 1 | | 1 | ND | 1 | | 1 | ND | 1 | | 1 | ND | 1 | | 1 | ND | 1 | | 1 |
| THALLIUM | 7440-28-0 | 2000 | ug/l | 0.14 | 1 | B | 1 | 0.05 | 1 | B | 1 | 0.052 | 1 | B | 1 | 0.036 | 1 | B | 1 | 0.073 | 1 | B | 1 | 0.023 | 1 | B | 1 |
| TIN | 7440-31-5 | 61000000 | ug/l | 6.1 | 1 | J | 5 | 3.5 | 1 | JB | 5 | 4.3 | 1 | JB | 5 | 2.8 | 1 | JB | 5 | 11.5 | 1 | J | 5 | 7.8 | 1 | J | 5 |
| VANADIUM (FUME OR DUST) | 7440-62-2 | 720000 | ug/l | 0.2 | 1 | B | 1 | ND | 1 | | 1 | ND | 1 | | 1 | 0.17 | 1 | B | 1 | 0.38 | 1 | B | 1 | ND | 1 | | 1 |
| ZINC | 7440-66-6 | 2000000 | ug/l | 23.4 | 1 | | 5 | 5.5 | 1 | J | 5 | 6.7 | 1 | J | 5 | 15.5 | 1 | J | 5 | 31 | 1 | | 5 | 14.2 | 1 | | 5 |

**Table 5**
**Summary of Groundwater Analytical Results - October 2008**
**Comparison to Pennsylvania Non-Residential Non-Use Aquifer Groundwater MSCs**
**U.S. Steel - RCRA Groundwater Sampling**
**Fairless Hills, Pennsylvania**

| | CAS No | PADEP Non-Residentail Non-Use Aquifer GW MSC | Location ID | MW5-29-49 | | | | MW5-31-21 | | | | MW5-32-31 | | | | MW5-33-41 | | | | MW5-41-19 | | | | MW5-7-24 | | | | MW6-12-42 | | | |
|---|---|---|---|---|---|---|---|---|---|---|---|---|---|---|---|---|---|---|---|---|---|---|---|---|---|---|---|---|---|---|---|
| | | | Sample ID | MW5-29-49_10-08-N | | | | MW5-31-21_10-08-N | | | | MW5-32-31_10-08-N | | | | MW5-33-41_10-08-N | | | | MW5-41-19_10-08-N | | | | MW5-7-24_10-08-N | | | | MW6-12-42_10-08-N | | | |
| | | | Sample Date | 10/17/2008 | | | | 10/20/2008 | | | | 10/20/2008 | | | | 10/20/2008 | | | | 10/15/2008 | | | | 10/15/2008 | | | | 10/17/2008 | | | |
| | | | Lab Id | C8J180168023 | | | | C8J220361005 | | | | C8J220361006 | | | | C8J220361007 | | | | C8J180168001 | | | | C8J180168002 | | | | C8J180168021 | | | |
| ***RCRA APPENDIX IX VOLATILE ORGANIC COMPOUNDS (Method 8260)*** | | | | Result | DF | Q | RL | Result | DF | Q | RL | Result | DF | Q | RL | Result | DF | Q | RL | Result | DF | Q | RL | Result | DF | Q | RL | Result | DF | Q | RL |
| 1,1,1,2-TETRACHLOROETHANE | 630-20-6 | 7000 | ug/l | ND | 1 | | 1 | ND | 1 | | 1 | ND | 1 | | 1 | ND | 1 | | 1 | ND | 1 | | 1 | ND | 25 | | 25 | ND | 1 | | 1 |
| 1,1,1-TRICHLOROETHANE | 71-55-6 | 2000 | ug/l | ND | 1 | | 1 | ND | 1 | | 1 | ND | 1 | | 1 | ND | 1 | | 1 | ND | 1 | | 1 | ND | 25 | | 25 | ND | 1 | | 1 |
| 1,1,2,2-TETRACHLOROETHANE | 79-34-5 | 30 | ug/l | ND | 1 | | 1 | ND | 1 | | 1 | ND | 1 | | 1 | ND | 1 | | 1 | ND | 1 | | 1 | ND | 25 | | 25 | ND | 1 | | 1 |
| 1,1,2-TRICHLOROETHANE | 79-00-5 | 50 | ug/l | ND | 1 | | 1 | ND | 1 | | 1 | ND | 1 | | 1 | ND | 1 | | 1 | ND | 1 | | 1 | ND | 25 | | 25 | ND | 1 | | 1 |
| 1,1-DICHLOROETHANE | 75-34-3 | 1100 | ug/l | ND | 1 | | 1 | ND | 1 | | 1 | ND | 1 | | 1 | ND | 1 | | 1 | ND | 1 | | 1 | ND | 25 | | 25 | ND | 1 | | 1 |
| 1,1-DICHLOROETHYLENE | 75-35-4 | 70 | ug/l | ND | 1 | | 1 | ND | 1 | | 1 | ND | 1 | | 1 | ND | 1 | | 1 | ND | 1 | | 1 | ND | 25 | | 25 | ND | 1 | | 1 |
| 1,2,3-TRICHLOROPROPANE | 96-18-4 | 4000 | ug/l | ND | 1 | | 1 | ND | 1 | | 1 | ND | 1 | | 1 | ND | 1 | | 1 | ND | 1 | | 1 | ND | 25 | | 25 | ND | 1 | | 1 |
| 1,2-DIBROMO-3-CHLOROPROPANE (DBCP) | 96-12-8 | 20 | ug/l | ND | 1 | | 1 | ND | 1 | | 1 | ND | 1 | | 1 | ND | 1 | | 1 | ND | 1 | | 1 | ND | 25 | | ***25*** | ND | 1 | | 1 |
| 1,2-DIBROMOETHANE | 106-93-4 | 5 | ug/l | ND | 1 | | 1 | ND | 1 | | 1 | ND | 1 | | 1 | ND | 1 | | 1 | ND | 1 | | 1 | ND | 25 | | ***25*** | ND | 1 | | 1 |
| 1,2-DICHLOROETHANE | 107-06-2 | 50 | ug/l | ND | 1 | | 1 | ND | 1 | | 1 | ND | 1 | | 1 | ND | 1 | | 1 | ND | 1 | | 1 | ND | 25 | | 25 | ND | 1 | | 1 |
| 1,2-DICHLOROPROPANE | 78-87-5 | 50 | ug/l | ND | 1 | | 1 | ND | 1 | | 1 | ND | 1 | | 1 | ND | 1 | | 1 | ND | 1 | | 1 | ND | 25 | | 25 | ND | 1 | | 1 |
| 1,4-DIOXANE | 123-91-1 | 240 | ug/l | ND | 1 | | 200 | ND | 1 | | 200 | ND | 1 | | 200 | ND | 1 | | 200 | ND | 1 | | 200 | ND | 25 | | ***5000*** | ND | 1 | | 200 |
| 2-BUTANONE (MEK) | 78-93-3 | 580000 | ug/l | ND | 1 | | 5 | ND | 1 | | 5 | ND | 1 | | 5 | ND | 1 | | 5 | ND | 1 | | 5 | ND | 25 | | 120 | ND | 1 | | 5 |
| 2-CHLOR-1,3-BUTADIENE | 126-99-8 | 4100 | ug/l | ND | 1 | | 1 | ND | 1 | | 1 | ND | 1 | | 1 | ND | 1 | | 1 | ND | 1 | | 1 | ND | 25 | | 25 | ND | 1 | | 1 |
| 2-METHYL-1-PROPANOL | 78-83-1 | 610000 | ug/l | ND | 1 | | 40 | ND | 1 | | 40 | ND | 1 | | 40 | ND | 1 | | 40 | ND | 1 | | 40 | ND | 25 | | 1000 | ND | 1 | | 40 |
| 4-METHYL-2-PENTANONE (MIBK) | 108-10-1 | 41000 | ug/l | ND | 1 | | 5 | ND | 1 | | 5 | ND | 1 | | 5 | ND | 1 | | 5 | ND | 1 | | 5 | ND | 25 | | 120 | ND | 1 | | 5 |
| ACETONE | 67-64-1 | 100000 | ug/l | ND | 1 | | 5 | ND | 1 | | 5 | ND | 1 | | 5 | ND | 1 | | 5 | ND | 1 | | 5 | ND | 25 | | 120 | 2.6 | 1 | J | 5 |
| ACETONITRILE | 75-05-8 | 3500 | ug/l | ND | 1 | | 20 | ND | 1 | | 20 | ND | 1 | | 20 | ND | 1 | | 20 | ND | 1 | | 20 | ND | 25 | | 500 | ND | 1 | | 20 |
| ACROLEIN | 107-02-8 | 1.2 | ug/l | ND | 1 | | ***20*** | ND | 1 | | ***20*** | ND | 1 | | ***20*** | ND | 1 | | ***20*** | ND | 1 | | ***20*** | ND | 25 | | ***500*** | ND | 1 | | ***20*** |
| ACRYLONITRILE | 107-13-1 | 270 | ug/l | ND | 1 | | 20 | ND | 1 | | 20 | ND | 1 | | 20 | ND | 1 | | 20 | ND | 1 | | 20 | ND | 25 | | ***500*** | ND | 1 | | 20 |
| ALLYLCHLORIDE | 107-05-1 | 580 | ug/l | ND | 1 | | 1 | ND | 1 | | 1 | ND | 1 | | 1 | ND | 1 | | 1 | ND | 1 | | 1 | ND | 25 | | 25 | ND | 1 | | 1 |
| BENZENE | 71-43-2 | 500 | ug/l | ND | 1 | | 1 | ND | 1 | | 1 | ND | 1 | | 1 | ND | 1 | | 1 | ND | 1 | | 1 | 490 | 25 | | 25 | ND | 1 | | 1 |
| BROMODICHLOROMETHANE | 75-27-4 | 100 | ug/l | ND | 1 | | 1 | ND | 1 | | 1 | ND | 1 | | 1 | ND | 1 | | 1 | ND | 1 | | 1 | ND | 25 | | 25 | ND | 1 | | 1 |
| BROMOMETHANE | 74-83-9 | 1000 | ug/l | ND | 1 | | 1 | ND | 1 | | 1 | ND | 1 | | 1 | ND | 1 | | 1 | ND | 1 | | 1 | ND | 25 | | 25 | ND | 1 | | 1 |
| CARBON DISULFIDE | 75-15-0 | 4100 | ug/l | ND | 1 | | 1 | ND | 1 | | 1 | ND | 1 | | 1 | ND | 1 | | 1 | ND | 1 | | 1 | ND | 25 | | 25 | ND | 1 | | 1 |
| CARBON TETRACHLORIDE | 56-23-5 | 50 | ug/l | ND | 1 | | 1 | ND | 1 | | 1 | ND | 1 | | 1 | ND | 1 | | 1 | ND | 1 | | 1 | ND | 25 | | 25 | ND | 1 | | 1 |
| CFC-11 | 75-69-4 | 200000 | ug/l | ND | 1 | | 1 | ND | 1 | | 1 | ND | 1 | | 1 | ND | 1 | | 1 | ND | 1 | | 1 | ND | 25 | | 25 | ND | 1 | | 1 |
| CFC-12 | 75-71-8 | 100000 | ug/l | ND | 1 | | 1 | ND | 1 | | 1 | ND | 1 | | 1 | ND | 1 | | 1 | ND | 1 | | 1 | ND | 25 | | 25 | ND | 1 | | 1 |
| CHLOROBENZENE | 108-90-7 | 10000 | ug/l | ND | 1 | | 1 | ND | 1 | | 1 | ND | 1 | | 1 | ND | 1 | | 1 | ND | 1 | | 1 | ND | 25 | | 25 | ND | 1 | | 1 |
| CHLORODIBROMOMETHANE | 124-48-1 | 10000 | ug/l | ND | 1 | | 1 | ND | 1 | | 1 | ND | 1 | | 1 | ND | 1 | | 1 | ND | 1 | | 1 | ND | 25 | | 25 | ND | 1 | | 1 |
| CHLOROETHANE | 75-00-3 | 90000 | ug/l | ND | 1 | | 1 | ND | 1 | | 1 | ND | 1 | | 1 | ND | 1 | | 1 | ND | 1 | | 1 | ND | 25 | | 25 | ND | 1 | | 1 |
| CHLOROFORM | 67-66-3 | 1000 | ug/l | ND | 1 | | 1 | ND | 1 | | 1 | ND | 1 | | 1 | ND | 1 | | 1 | ND | 1 | | 1 | ND | 25 | | 25 | ND | 1 | | 1 |
| CHLOROMETHANE | 74-87-3 | 300 | ug/l | ND | 1 | | 1 | ND | 1 | | 1 | ND | 1 | | 1 | ND | 1 | | 1 | ND | 1 | | 1 | ND | 25 | | 25 | ND | 1 | | 1 |
| CIS-1,3-DICHLOROPROPENE | 10061-01-5 | NS | ug/l | ND | 1 | | 1 | ND | 1 | | 1 | ND | 1 | | 1 | ND | 1 | | 1 | ND | 1 | | 1 | ND | 25 | | 25 | ND | 1 | | 1 |
| DIBROMOMETHANE | 74-95-3 | 20000 | ug/l | ND | 1 | | 1 | ND | 1 | | 1 | ND | 1 | | 1 | ND | 1 | | 1 | ND | 1 | | 1 | ND | 25 | | 25 | ND | 1 | | 1 |
| DICHLOROMETHANE | 75-09-2 | 500 | ug/l | ND | 1 | | 1 | ND | 1 | | 1 | ND | 1 | | 1 | ND | 1 | | 1 | ND | 1 | | 1 | ND | 25 | | 25 | ND | 1 | | 1 |
| ETHYL METHACRYLATE | 97-63-2 | 1800 | ug/l | ND | 1 | | 1 | ND | 1 | | 1 | ND | 1 | | 1 | ND | 1 | | 1 | ND | 1 | | 1 | ND | 25 | | 25 | ND | 1 | | 1 |
| ETHYLBENZENE | 100-41-4 | 70000 | ug/l | ND | 1 | | 1 | ND | 1 | | 1 | ND | 1 | | 1 | ND | 1 | | 1 | ND | 1 | | 1 | ND | 25 | | 25 | ND | 1 | | 1 |
| IODOMETHANE | 74-88-4 | 5 | ug/l | ND | 1 | | 1 | ND | 1 | | 1 | ND | 1 | | 1 | ND | 1 | | 1 | ND | 1 | | 1 | ND | 25 | | ***25*** | ND | 1 | | 1 |
| METHYL METHACRYLATE | 80-62-6 | 410000 | ug/l | ND | 1 | | 1 | ND | 1 | | 1 | ND | 1 | | 1 | ND | 1 | | 1 | ND | 1 | | 1 | ND | 25 | | 25 | ND | 1 | | 1 |
| METHYL N-BUTYL KETONE | 591-78-6 | 5 | ug/l | ND | 1 | | 5 | ND | 1 | | 5 | ND | 1 | | 5 | ND | 1 | | 5 | ND | 1 | | 5 | ND | 25 | | ***120*** | ND | 1 | | 5 |
| METHYLACRYLONITRILE | 126-98-7 | 4.1 | ug/l | ND | 1 | | 1 | ND | 1 | | 1 | ND | 1 | | 1 | ND | 1 | | 1 | ND | 1 | | 1 | ND | 25 | | ***25*** | ND | 1 | | 1 |
| PENTACHLOROETHANE | 76-01-7 | 5 | ug/l | ND | 1.04 | | 2.1 | ND | 1.11 | | 2.2 | ND | 1.04 | | 2.1 | ND | 1.03 | | 2.1 | ND | 1.08 | | 2.2 | ND | 1 | | 2 | ND | 1.03 | | 2.1 |
| PROPIONITRILE | 107-12-0 | 5 | ug/l | ND | 1 | | 2 | ND | 1 | | 2 | ND | 1 | | 2 | ND | 1 | | 2 | ND | 1 | | 2 | ND | 25 | | ***50*** | ND | 1 | | 2 |
| STYRENE (MONOMER) | 100-42-5 | 10000 | ug/l | ND | 1 | | 1 | ND | 1 | | 1 | ND | 1 | | 1 | ND | 1 | | 1 | ND | 1 | | 1 | ND | 25 | | 25 | ND | 1 | | 1 |
| TETRACHLOROETHENE | 127-18-4 | 50 | ug/l | ND | 1 | | 1 | ND | 1 | | 1 | ND | 1 | | 1 | ND | 1 | | 1 | ND | 1 | | 1 | ND | 25 | | 25 | ND | 1 | | 1 |
| TOLUENE | 108-88-3 | 100000 | ug/l | ND | 1 | | 1 | ND | 1 | | 1 | ND | 1 | | 1 | ND | 1 | | 1 | ND | 1 | | 1 | ND | 25 | | 25 | ND | 1 | | 1 |
| TRANS-1,2-DICHLOROETHENE | 156-60-5 | 1000 | ug/l | ND | 1 | | 1 | ND | 1 | | 1 | ND | 1 | | 1 | ND | 1 | | 1 | ND | 1 | | 1 | ND | 25 | | 25 | ND | 1 | | 1 |
| TRANS-1,3-DICHLOROPROPENE | 10061-02-6 | NS | ug/l | ND | 1 | | 1 | ND | 1 | | 1 | ND | 1 | | 1 | ND | 1 | | 1 | ND | 1 | | 1 | ND | 25 | | 25 | ND | 1 | | 1 |
| TRANS-1,4-DICHLOROBUTENE | 110-57-6 | 5 | ug/l | ND | 1 | | 1 | ND | 1 | | 1 | ND | 1 | | 1 | ND | 1 | | 1 | ND | 1 | | 1 | ND | 25 | | ***25*** | ND | 1 | | 1 |
| TRIBROMOMETHANE | 75-25-2 | 10000 | ug/l | ND | 1 | | 1 | ND | 1 | | 1 | ND | 1 | | 1 | ND | 1 | | 1 | ND | 1 | | 1 | ND | 25 | | 25 | ND | 1 | | 1 |
| TRICHLOROETHYLENE | 79-01-6 | 50 | ug/l | ND | 1 | | 1 | ND | 1 | | 1 | ND | 1 | | 1 | ND | 1 | | 1 | ND | 1 | | 1 | ND | 25 | | 25 | ND | 1 | | 1 |
| VINYL ACETATE | 108-05-4 | 1200 | ug/l | ND | 1 | | 1 | ND | 1 | | 1 | ND | 1 | | 1 | ND | 1 | | 1 | ND | 1 | | 1 | ND | 25 | | 25 | ND | 1 | | 1 |
| VINYL CHLORIDE | 75-01-4 | 20 | ug/l | ND | 1 | | 1 | ND | 1 | | 1 | ND | 1 | | 1 | ND | 1 | | 1 | ND | 1 | | 1 | ND | 25 | | ***25*** | ND | 1 | | 1 |
| XYLENE (TOTAL) | 1330-20-7 | 180000 | ug/l | ND | 1 | | 3 | ND | 1 | | 3 | ND | 1 | | 3 | ND | 1 | | 3 | ND | 1 | | 3 | ND | 25 | | 75 | ND | 1 | | 3 |

**Table 5**
**Summary of Groundwater Analytical Results - October 2008**
**Comparison to Pennsylvania Non-Residential Non-Use Aquifer Groundwater MSCs**
**U.S. Steel - RCRA Groundwater Sampling**
**Fairless Hills, Pennsylvania**

| | CAS No | PADEP Non-Residentail Non-Use Aquifer GW MSC | Location ID | MW5-29-49 | | | | MW5-31-21 | | | | MW5-32-31 | | | | MW5-33-41 | | | | MW5-41-19 | | | | MW5-7-24 | | | | MW6-12-42 | | | |
|---|---|---|---|---|---|---|---|---|---|---|---|---|---|---|---|---|---|---|---|---|---|---|---|---|---|---|---|---|---|---|---|
| | | | Sample ID | MW5-29-49_10-08-N | | | | MW5-31-21_10-08-N | | | | MW5-32-31_10-08-N | | | | MW5-33-41_10-08-N | | | | MW5-41-19_10-08-N | | | | MW5-7-24_10-08-N | | | | MW6-12-42_10-08-N | | | |
| | | | Sample Date | 10/17/2008 | | | | 10/20/2008 | | | | 10/20/2008 | | | | 10/20/2008 | | | | 10/15/2008 | | | | 10/15/2008 | | | | 10/17/2008 | | | |
| | | | Lab Id | C8J180168023 | | | | C8J220361005 | | | | C8J220361006 | | | | C8J220361007 | | | | C8J180168001 | | | | C8J180168002 | | | | C8J180168021 | | | |
| ***RCRA APPENDIX IX SEMI-VOLATILE ORGANIC COMPOUNDS (Method 8270)*** | | | | Result | DF | Q | RL | Result | DF | Q | RL | Result | DF | Q | RL | Result | DF | Q | RL | Result | DF | Q | RL | Result | DF | Q | RL | Result | DF | Q | RL |
| 1,2,4,5-TETRACHLOROBENZENE | 95-94-3 | 580 | ug/l | ND | 1.04 | | 1 | ND | 1.11 | | 1.1 | ND | 1.04 | | 1 | ND | 1.03 | | 1 | ND | 1.08 | | 1.1 | ND | 1 | | 1 | ND | 1.03 | | 1 |
| 1,2,4-TRICHLOROBENZENE | 120-82-1 | 44000 | ug/l | ND | 1.04 | | 0.21 | ND | 1.11 | | 0.22 | ND | 1.04 | | 0.21 | ND | 1.03 | | 0.21 | ND | 1.08 | | 0.22 | ND | 1 | | 0.2 | ND | 1.03 | | 0.21 |
| 1,2-DICHLOROBENZENE | 95-50-1 | 60000 | ug/l | ND | 1.04 | | 0.21 | ND | 1.11 | | 0.22 | ND | 1.04 | | 0.21 | ND | 1.03 | | 0.21 | ND | 1.08 | | 0.22 | ND | 1 | | 0.2 | ND | 1.03 | | 0.21 |
| 1,3,5-TRINITROBENZENE | 99-35-4 | NS | ug/l | ND | 1.04 | | 1 | ND | 1.11 | | 1.1 | ND | 1.04 | | 1 | ND | 1.03 | | 1 | ND | 1.08 | | 1.1 | ND | 1 | | 1 | ND | 1.03 | | 1 |
| 1,4-DICHLOROBENZENE | 106-46-7 | 7500 | ug/l | ND | 1.04 | | 0.21 | ND | 1.11 | | 0.22 | ND | 1.04 | | 0.21 | ND | 1.03 | | 0.21 | ND | 1.08 | | 0.22 | ND | 1 | | 0.2 | ND | 1.03 | | 0.21 |
| 1,4-NAPHTHOQUINONE | 130-15-4 | 5 | ug/l | ND | 1.04 | | 1 | ND | 1.11 | | 1.1 | ND | 1.04 | | 1 | ND | 1.03 | | 1 | ND | 1.08 | | 1.1 | 0.9 | 1 | J | 1 | ND | 1.03 | | 1 |
| 1-NAPHTHYLAMINE | 134-32-7 | 1400 | ug/l | ND | 1.04 | | 1 | ND | 1.11 | | 1.1 | ND | 1.04 | | 1 | ND | 1.03 | | 1 | ND | 1.08 | | 1.1 | ND | 1 | | 1 | ND | 1.03 | | 1 |
| 2,4,5-TRICHLOROPHENOL | 95-95-4 | 1000000 | ug/l | ND | 1.04 | | 1 | ND | 1.11 | | 1.1 | ND | 1.04 | | 1 | ND | 1.03 | | 1 | ND | 1.08 | | 1.1 | ND | 1 | | 1 | ND | 1.03 | | 1 |
| 2,4,6-TRICHLOROPHENOL | 88-06-2 | 31000 | ug/l | ND | 1.04 | | 1 | ND | 1.11 | | 1.1 | ND | 1.04 | | 1 | ND | 1.03 | | 1 | ND | 1.08 | | 1.1 | ND | 1 | | 1 | ND | 1.03 | | 1 |
| 2,4-DICHLOROPHENOL | 120-83-2 | 20000 | ug/l | ND | 1.04 | | 0.21 | ND | 1.11 | | 0.22 | ND | 1.04 | | 0.21 | ND | 1.03 | | 0.21 | ND | 1.08 | | 0.22 | ND | 1 | | 0.2 | ND | 1.03 | | 0.21 |
| 2,4-DIMETHYLPHENOL | 105-67-9 | 2000000 | ug/l | ND | 1.04 | | 1 | ND | 1.11 | | 1.1 | ND | 1.04 | | 1 | ND | 1.03 | | 1 | ND | 1.08 | | 1.1 | 2.1 | 1 | | 1 | ND | 1.03 | | 1 |
| 2,4-DINITROPHENOL | 51-28-5 | 410 | ug/l | 1.3 | 1.04 | J | 5.2 | ND | 1.11 | | 5.6 | ND | 1.04 | | 5.2 | ND | 1.03 | | 5.2 | ND | 1.08 | | 5.4 | ND | 1 | | 5 | ND | 1.03 | | 5.2 |
| 2,4-DINITROTOLUENE | 121-14-2 | 8400 | ug/l | 0.058 | 1.04 | J | 1 | ND | 1.11 | | 1.1 | ND | 1.04 | | 1 | ND | 1.03 | | 1 | ND | 1.08 | | 1.1 | ND | 1 | | 1 | ND | 1.03 | | 1 |
| 2,6-DICHLOROPHENOL | 87-65-0 | NS | ug/l | ND | 1.04 | | 0.21 | ND | 1.11 | | 0.22 | ND | 1.04 | | 0.21 | ND | 1.03 | | 0.21 | ND | 1.08 | | 0.22 | ND | 1 | | 0.2 | ND | 1.03 | | 0.21 |
| 2,6-DINITROTOLUENE | 606-20-2 | 100000 | ug/l | ND | 1.04 | | 1 | ND | 1.11 | | 1.1 | ND | 1.04 | | 1 | ND | 1.03 | | 1 | ND | 1.08 | | 1.1 | ND | 1 | | 1 | ND | 1.03 | | 1 |
| 2-ACETYLAMINOFLUORENE | 53-96-3 | 680 | ug/l | ND | 1.04 | | 1 | ND | 1.11 | | 1.1 | ND | 1.04 | | 1 | ND | 1.03 | | 1 | ND | 1.08 | | 1.1 | ND | 1 | | 1 | ND | 1.03 | | 1 |
| 2-CHLORONAPHTHALENE | 91-58-7 | 8200 | ug/l | ND | 1.04 | | 0.21 | ND | 1.11 | | 0.22 | ND | 1.04 | | 0.21 | ND | 1.03 | | 0.21 | ND | 1.08 | | 0.22 | ND | 1 | | 0.2 | ND | 1.03 | | 0.21 |
| 2-CHLOROPHENOL | 95-57-8 | 40 | ug/l | ND | 1.04 | | 1 | ND | 1.11 | | 1.1 | ND | 1.04 | | 1 | ND | 1.03 | | 1 | ND | 1.08 | | 1.1 | ND | 1 | | 1 | ND | 1.03 | | 1 |
| 2-METHYL PYRIDINE (2-PICOLINE) | 109-06-8 | 5 | ug/l | ND | 1.04 | | 1 | ND | 1.11 | | 1.1 | ND | 1.04 | | 1 | ND | 1.03 | | 1 | ND | 1.08 | | 1.1 | ND | 1 | | 1 | ND | 1.03 | | 1 |
| 2-METHYLNAPHTHALENE | 91-57-6 | 2000 | ug/l | ND | 1.04 | | 0.21 | ND | 1.11 | | 0.22 | ND | 1.04 | | 0.21 | ND | 1.03 | | 0.21 | ND | 1.08 | | 0.22 | 0.29 | 1 | | 0.2 | ND | 1.03 | | 0.21 |
| 2-METHYLPHENOL | 95-48-7 | 510000 | ug/l | ND | 1.04 | | 1 | ND | 1.11 | | 1.1 | ND | 1.04 | | 1 | ND | 1.03 | | 1 | ND | 1.08 | | 1.1 | 3 | 1 | | 1 | ND | 1.03 | | 1 |
| 2-NAPHTHALENAMINE (2-NAPHTHYLAMINE) | 91-59-8 | 1400 | ug/l | ND | 1.04 | | 1 | ND | 1.11 | | 1.1 | ND | 1.04 | | 1 | ND | 1.03 | | 1 | ND | 1.08 | | 1.1 | 0.62 | 1 | J | 1 | ND | 1.03 | | 1 |
| 2-NITROANILINE | 88-74-4 | 5.8 | ug/l | 0.075 | 1.04 | J | 5.2 | ND | 1.11 | | 5.6 | ND | 1.04 | | 5.2 | ND | 1.03 | | 5.2 | ND | 1.08 | | 5.4 | ND | 1 | | 5 | ND | 1.03 | | 5.2 |
| 2-NITROPHENOL | 88-75-5 | 820000 | ug/l | ND | 1.04 | | 1 | ND | 1.11 | | 1.1 | ND | 1.04 | | 1 | ND | 1.03 | | 1 | ND | 1.08 | | 1.1 | ND | 1 | | 1 | ND | 1.03 | | 1 |
| 3,3'-DICHLOROBENZIDINE | 91-94-1 | 3100 | ug/l | ND | 1.04 | | 1 | ND | 1.11 | | 1.1 | ND | 1.04 | | 1 | ND | 1.03 | | 1 | ND | 1.08 | | 1.1 | ND | 1 | | 1 | ND | 1.03 | | 1 |
| 3,3'-DIMETHYLBENZIDINE | 119-93-7 | 280 | ug/l | ND | 1.04 | | 10 | ND | 1.11 | | 11 | ND | 1.04 | | 10 | ND | 1.03 | | 10 | ND | 1.08 | | 11 | ND | 1 | | 10 | ND | 1.03 | | 10 |
| 3,5,5-TRIMETHYL-2-CYCLOHEXENE-1-ONE | 78-59-1 | 100000 | ug/l | ND | 1.04 | | 1 | ND | 1.11 | | 1.1 | ND | 1.04 | | 1 | ND | 1.03 | | 1 | ND | 1.08 | | 1.1 | ND | 1 | | 1 | ND | 1.03 | | 1 |
| 3-METHYLCHLORANTHRENE | 56-49-5 | NS | ug/l | ND | 1.04 | | 1 | ND | 1.11 | | 1.1 | ND | 1.04 | | 1 | ND | 1.03 | | 1 | ND | 1.08 | | 1.1 | ND | 1 | | 1 | ND | 1.03 | | 1 |
| 3-Methylphenol & 4-Methylphenol | 65794-96-9 | NS | ug/l | 0.11 | 1.04 | J | 1 | ND | 1.11 | | 1.1 | ND | 1.04 | | 1 | ND | 1.03 | | 1 | ND | 1.08 | | 1.1 | 0.86 | 1 | J | 1 | ND | 1.03 | | 1 |
| 3-NITROANILINE | 99-09-2 | 5.8 | ug/l | 0.12 | 1.04 | J | 5.2 | ND | 1.11 | | 5.6 | ND | 1.04 | | 5.2 | ND | 1.03 | | 5.2 | ND | 1.08 | | 5.4 | ND | 1 | | 5 | ND | 1.03 | | 5.2 |
| 4,6-DINITRO-2-METHYLPHENOL | 534-52-1 | 5 | ug/l | ND | 1.04 | | ***5.2*** | ND | 1.11 | | ***5.6*** | ND | 1.04 | | ***5.2*** | ND | 1.03 | | ***5.2*** | ND | 1.08 | | ***5.4*** | ND | 1 | | 5 | ND | 1.03 | | ***5.2*** |
| 4-AMINOBIPHENYL | 92-67-1 | 120 | ug/l | ND | 1.04 | | 1 | ND | 1.11 | | 1.1 | ND | 1.04 | | 1 | ND | 1.03 | | 1 | ND | 1.08 | | 1.1 | ND | 1 | | 1 | ND | 1.03 | | 1 |
| 4-BROMOPHENYL PHENYL ETHER | 101-55-3 | 5 | ug/l | ND | 1.04 | | 1 | ND | 1.11 | | 1.1 | ND | 1.04 | | 1 | ND | 1.03 | | 1 | ND | 1.08 | | 1.1 | ND | 1 | | 1 | ND | 1.03 | | 1 |
| 4-CHLORO-3-METHYLPHENOL | 59-50-7 | 510 | ug/l | ND | 1.04 | | 1 | ND | 1.11 | | 1.1 | ND | 1.04 | | 1 | ND | 1.03 | | 1 | ND | 1.08 | | 1.1 | ND | 1 | | 1 | ND | 1.03 | | 1 |
| 4-CHLOROPHENYL PHENYL ETHER | 7005-72-3 | 5 | ug/l | ND | 1.04 | | 1 | ND | 1.11 | | 1.1 | ND | 1.04 | | 1 | ND | 1.03 | | 1 | ND | 1.08 | | 1.1 | ND | 1 | | 1 | ND | 1.03 | | 1 |
| 4-DIMETHYLAMINOAZOBENZENE | 60-11-7 | 570 | ug/l | ND | 1.04 | | 1 | ND | 1.11 | | 1.1 | ND | 1.04 | | 1 | ND | 1.03 | | 1 | ND | 1.08 | | 1.1 | ND | 1 | | 1 | ND | 1.03 | | 1 |
| 4-NITROPHENOL | 100-02-7 | 60000 | ug/l | 0.75 | 1.04 | J | 5.2 | ND | 1.11 | | 5.6 | ND | 1.04 | | 5.2 | ND | 1.03 | | 5.2 | ND | 1.08 | | 5.4 | ND | 1 | | 5 | ND | 1.03 | | 5.2 |
| 4-NITROQUINOLINE-N-OXIDE | 56-57-5 | 5 | ug/l | ND | 1.04 | | ***10*** | ND | 1.11 | | ***11*** | ND | 1.04 | | ***10*** | ND | 1.03 | | ***10*** | ND | 1.08 | | ***11*** | ND | 1 | | ***10*** | ND | 1.03 | | ***10*** |
| 5-NITRO-O-TOLUIDINE | 99-55-8 | NS | ug/l | ND | 1.04 | | 10 | ND | 1.11 | | 11 | ND | 1.04 | | 10 | ND | 1.03 | | 10 | ND | 1.08 | | 11 | ND | 1 | | 10 | ND | 1.03 | | 10 |
| 7,12-DIMETHYLBENZ(A)ANTHRACENE | 57-97-6 | NS | ug/l | ND | 1.04 | | 1 | ND | 1.11 | | 1.1 | ND | 1.04 | | 1 | ND | 1.03 | | 1 | ND | 1.08 | | 1.1 | ND | 1 | | 1 | ND | 1.03 | | 1 |
| a,a-Dimethylphenethylamine | 122-09-8 | 5 | ug/l | ND | 1.04 | | 1 | ND | 1.11 | | 1.1 | ND | 1.04 | | 1 | ND | 1.03 | | 1 | ND | 1.08 | | 1.1 | ND | 1 | | 1 | ND | 1.03 | | 1 |
| ACENAPHTHENE | 83-32-9 | 3800 | ug/l | ND | 1.04 | | 0.21 | ND | 1.11 | | 0.22 | ND | 1.04 | | 0.21 | ND | 1.03 | | 0.21 | ND | 1.08 | | 0.22 | 0.69 | 1 | | 0.2 | ND | 1.03 | | 0.21 |
| ACENAPHTHYLENE | 208-96-8 | 16000 | ug/l | ND | 1.04 | | 0.21 | ND | 1.11 | | 0.22 | ND | 1.04 | | 0.21 | ND | 1.03 | | 0.21 | ND | 1.08 | | 0.22 | 0.59 | 1 | | 0.2 | ND | 1.03 | | 0.21 |
| ACETOPHENONE | 98-86-2 | 10000 | ug/l | ND | 1.04 | | 1 | ND | 1.11 | | 1.1 | ND | 1.04 | | 1 | ND | 1.03 | | 1 | ND | 1.08 | | 1.1 | 0.11 | 1 | J | 1 | ND | 1.03 | | 1 |
| ANILINE | 62-53-3 | 5.8 | ug/l | ND | 1.04 | | 1 | ND | 1.11 | | 1.1 | ND | 1.04 | | 1 | ND | 1.03 | | 1 | ND | 1.08 | | 1.1 | 1 | 1 | | 1 | ND | 1.03 | | 1 |
| ANTHRACENE | 120-12-7 | 66 | ug/l | 0.076 | 1.04 | J | 0.21 | 0.38 | 1.11 | | 0.22 | 0.34 | 1.04 | | 0.21 | 0.38 | 1.03 | | 0.21 | ND | 1.08 | | 0.22 | 0.14 | 1 | J | 0.2 | ND | 1.03 | | 0.21 |
| ARAMITE | 140-57-8 | NS | ug/l | ND | 1.04 | | 1 | ND | 1.11 | | 1.1 | ND | 1.04 | | 1 | ND | 1.03 | | 1 | ND | 1.08 | | 1.1 | ND | 1 | | 1 | ND | 1.03 | | 1 |
| BENZO(A)ANTHRACENE | 56-55-3 | 11 | ug/l | 0.18 | 1.04 | J | 0.21 | ND | 1.11 | | 0.22 | ND | 1.04 | | 0.21 | 0.5 | 1.03 | | 0.21 | ND | 1.08 | | 0.22 | ND | 1 | | 0.2 | ND | 1.03 | | 0.21 |
| BENZO(A)PYRENE | 50-32-8 | 3.8 | ug/l | 0.58 | 1.04 | | 0.21 | ND | 1.11 | | 0.22 | ND | 1.04 | | 0.21 | 0.63 | 1.03 | | 0.21 | ND | 1.08 | | 0.22 | ND | 1 | | 0.2 | ND | 1.03 | | 0.21 |
| BENZO(B)FLUORANTHENE | 205-99-2 | 1.2 | ug/l | 0.69 | 1.04 | | 0.21 | ND | 1.11 | | 0.22 | ND | 1.04 | | 0.21 | 1 | 1.03 | | 0.21 | ND | 1.08 | | 0.22 | ND | 1 | | 0.2 | ND | 1.03 | | 0.21 |
| BENZO(GHI)PERYLENE | 191-24-2 | 0.26 | ug/l | **0.64** | 1.04 | | 0.21 | ND | 1.11 | | 0.22 | ND | 1.04 | | 0.21 | **1.1** | 1.03 | | 0.21 | ND | 1.08 | | 0.22 | ND | 1 | | 0.2 | ND | 1.03 | | 0.21 |
| BENZO(K)FLUORANTHENE | 207-08-9 | 0.55 | ug/l | **0.77** | 1.04 | | 0.21 | ND | 1.11 | | 0.22 | ND | 1.04 | | 0.21 | **0.99** | 1.03 | | 0.21 | ND | 1.08 | | 0.22 | ND | 1 | | 0.2 | ND | 1.03 | | 0.21 |
| BENZYL ALCOHOL | 100-51-6 | 31000 | ug/l | ND | 1.04 | | 1 | ND | 1.11 | | 1.1 | ND | 1.04 | | 1 | ND | 1.03 | | 1 | ND | 1.08 | | 1.1 | ND | 1 | | 1 | ND | 1.03 | | 1 |
| BENZYL BUTYL PHTHALATE | 85-68-7 | 2700 | ug/l | 0.34 | 1.04 | J | 1 | ND | 1.11 | | 1.1 | ND | 1.04 | | 1 | 0.34 | 1.03 | JB | 1 | 0.19 | 1.08 | J | 1.1 | 0.34 | 1 | J | 1 | ND | 1.03 | | 1 |
| BIS(2-CHLORO-1-METHYLETHYL) ETHER | 108-60-1 | 30000 | ug/l | ND | 1.04 | | 0.21 | ND | 1.11 | | 0.22 | ND | 1.04 | | 0.21 | ND | 1.03 | | 0.21 | ND | 1.08 | | 0.22 | ND | 1 | | 0.2 | ND | 1.03 | | 0.21 |
| BIS(2-CHLOROETHOXY)METHANE | 111-91-1 | 5 | ug/l | ND | 1.04 | | 1 | ND | 1.11 | | 1.1 | ND | 1.04 | | 1 | ND | 1.03 | | 1 | ND | 1.08 | | 1.1 | ND | 1 | | 1 | ND | 1.03 | | 1 |
| BIS(2-CHLOROETHYL) ETHER | 111-44-4 | 55 | ug/l | ND | 1.04 | | 0.21 | ND | 1.11 | | 0.22 | ND | 1.04 | | 0.21 | ND | 1.03 | | 0.21 | ND | 1.08 | | 0.22 | ND | 1 | | 0.2 | ND | 1.03 | | 0.21 |
| BIS(2-ETHYLHEXYL)PHTHALATE | 117-81-7 | 290 | ug/l | 0.27 | 1.04 | J | 1 | 0.81 | 1.11 | J | 1.1 | 0.8 | 1.04 | J | 1 | 0.89 | 1.03 | J | 1 | 0.59 | 1.08 | J | 1.1 | 0.48 | 1 | J | 1 | 1.5 | 1.03 | | 1 |
| CHLORDECONE (KEPONE) | 143-50-0 | 160 | ug/l | ND | 1.04 | | 4.2 | ND | 1.11 | | 4.4 | ND | 1.04 | | 4.2 | ND | 1.03 | | 4.1 | ND | 1.08 | | 4.3 | ND | 1 | | 4 | ND | 1.03 | | 4.1 |

**Table 5**
**Summary of Groundwater Analytical Results - October 2008**
**Comparison to Pennsylvania Non-Residential Non-Use Aquifer Groundwater MSCs**
**U.S. Steel - RCRA Groundwater Sampling**
**Fairless Hills, Pennsylvania**

| | CAS No | PADEP Non-Residentail Non-Use Aquifer GW MSC | Location ID | MW5-29-49 | | | | MW5-31-21 | | | | MW5-32-31 | | | | MW5-33-41 | | | | MW5-41-19 | | | | MW5-7-24 | | | | MW6-12-42 | | | |
|---|---|---|---|---|---|---|---|---|---|---|---|---|---|---|---|---|---|---|---|---|---|---|---|---|---|---|---|---|---|---|---|
| | | | Sample ID | MW5-29-49_10-08-N | | | | MW5-31-21_10-08-N | | | | MW5-32-31_10-08-N | | | | MW5-33-41_10-08-N | | | | MW5-41-19_10-08-N | | | | MW5-7-24_10-08-N | | | | MW6-12-42_10-08-N | | | |
| | | | Sample Date | 10/17/2008 | | | | 10/20/2008 | | | | 10/20/2008 | | | | 10/20/2008 | | | | 10/15/2008 | | | | 10/15/2008 | | | | 10/17/2008 | | | |
| | | | Lab Id | C8J180168023 | | | | C8J220361005 | | | | C8J220361006 | | | | C8J220361007 | | | | C8J180168001 | | | | C8J180168002 | | | | C8J180168021 | | | |
| ***RCRA APPENDIX IX SEMI-VOLATILE ORGANIC COMPOUNDS (Method 8270)*** | | | | Result | DF | Q | RL | Result | DF | Q | RL | Result | DF | Q | RL | Result | DF | Q | RL | Result | DF | Q | RL | Result | DF | Q | RL | Result | DF | Q | RL |
| CHLOROBENZILATE | 510-15-6 | 9600 | ug/l | ND | 1.04 | | 1 | ND | 1.11 | | 1.1 | ND | 1.04 | | 1 | ND | 1.03 | | 1 | ND | 1.08 | | 1.1 | ND | 1 | | 1 | ND | 1.03 | | 1 |
| CHLOROPHENOLS | 58-90-2 | 61000 | ug/l | ND | 1.04 | | 1 | ND | 1.11 | | 1.1 | ND | 1.04 | | 1 | ND | 1.03 | | 1 | ND | 1.08 | | 1.1 | ND | 1 | | 1 | ND | 1.03 | | 1 |
| CHRYSENE | 218-01-9 | 1.9 | ug/l | 0.19 | 1.04 | J | 0.21 | ND | 1.11 | | 0.22 | ND | 1.04 | | 0.21 | 0.67 | 1.03 | | 0.21 | ND | 1.08 | | 0.22 | ND | 1 | | 0.2 | ND | 1.03 | | 0.21 |
| CYGON | 60-51-5 | 20000 | ug/l | ND | 1.04 | | 1 | ND | 1.11 | | 1.1 | ND | 1.04 | | 1 | ND | 1.03 | | 1 | ND | 1.08 | | 1.1 | ND | 1 | | 1 | ND | 1.03 | | 1 |
| DIALLATE | 2303-16-4 | 1000 | ug/l | ND | 1.04 | | 1 | ND | 1.11 | | 1.1 | ND | 1.04 | | 1 | ND | 1.03 | | 1 | ND | 1.08 | | 1.1 | ND | 1 | | 1 | ND | 1.03 | | 1 |
| DIBENZO(A,H)ANTHRACENE | 53-70-3 | 0.6 | ug/l | **0.95** | 1.04 | | 0.21 | ND | 1.11 | | 0.22 | ND | 1.04 | | 0.21 | **1.4** | 1.03 | | 0.21 | ND | 1.08 | | 0.22 | ND | 1 | | 0.2 | ND | 1.03 | | 0.21 |
| DIBENZOFURAN | 132-64-9 | 5 | ug/l | ND | 1.04 | | 1 | ND | 1.11 | | 1.1 | ND | 1.04 | | 1 | ND | 1.03 | | 1 | ND | 1.08 | | 1.1 | 0.15 | 1 | J | 1 | ND | 1.03 | | 1 |
| DIETHYL PHTHALATE | 84-66-2 | 1100000 | ug/l | ND | 1.04 | | 1 | ND | 1.11 | | 1.1 | ND | 1.04 | | 1 | ND | 1.03 | | 1 | ND | 1.08 | | 1.1 | ND | 1 | | 1 | ND | 1.03 | | 1 |
| DIMETHYL PHTHALATE | 131-11-3 | 5 | ug/l | ND | 1.04 | | 1 | ND | 1.11 | | 1.1 | ND | 1.04 | | 1 | ND | 1.03 | | 1 | ND | 1.08 | | 1.1 | ND | 1 | | 1 | ND | 1.03 | | 1 |
| DI-N-BUTYL PHTHALATE | 84-74-2 | 400000 | ug/l | 0.24 | 1.04 | J | 1 | 0.54 | 1.11 | JB | 1.1 | 0.1 | 1.04 | JB | 1 | 0.92 | 1.03 | JB | 1 | 0.079 | 1.08 | J | 1.1 | ND | 1 | | 1 | ND | 1.03 | | 1 |
| DINITROBUTYL PHENOL | 88-85-7 | 700 | ug/l | ND | 1.04 | | 1 | ND | 1.11 | | 1.1 | ND | 1.04 | | 1 | ND | 1.03 | | 1 | ND | 1.08 | | 1.1 | ND | 1 | | 1 | ND | 1.03 | | 1 |
| DI-N-OCTYL PHTHALATE | 117-84-0 | 3000 | ug/l | ND | 1.04 | | 1 | ND | 1.11 | | 1.1 | ND | 1.04 | | 1 | 0.8 | 1.03 | J | 1 | ND | 1.08 | | 1.1 | ND | 1 | | 1 | ND | 1.03 | | 1 |
| DISULFOTON | 298-04-4 | 30 | ug/l | ND | 1.04 | | 1 | ND | 1.11 | | 1.1 | ND | 1.04 | | 1 | ND | 1.03 | | 1 | ND | 1.08 | | 1.1 | ND | 1 | | 1 | ND | 1.03 | | 1 |
| ETHYL METHANESULFONATE | 62-50-0 | 5 | ug/l | ND | 1.04 | | 1 | ND | 1.11 | | 1.1 | ND | 1.04 | | 1 | ND | 1.03 | | 1 | ND | 1.08 | | 1.1 | ND | 1 | | 1 | ND | 1.03 | | 1 |
| ETHYL PARATHION (PARATHION) | 56-38-2 | 610 | ug/l | ND | 1.04 | | 1 | ND | 1.11 | | 1.1 | ND | 1.04 | | 1 | ND | 1.03 | | 1 | ND | 1.08 | | 1.1 | ND | 1 | | 1 | ND | 1.03 | | 1 |
| FAMPHUR | 52-85-7 | 5 | ug/l | ND | 1.04 | | ***10*** | ND | 1.11 | | ***11*** | ND | 1.04 | | ***10*** | ND | 1.03 | | ***10*** | ND | 1.08 | | ***11*** | ND | 1 | | ***10*** | ND | 1.03 | | ***10*** |
| FLUORANTHENE | 206-44-0 | 260 | ug/l | 0.5 | 1.04 | | 0.21 | ND | 1.11 | | 0.22 | ND | 1.04 | | 0.21 | 0.58 | 1.03 | | 0.21 | ND | 1.08 | | 0.22 | 0.47 | 1 | | 0.2 | ND | 1.03 | | 0.21 |
| FLUORENE | 86-73-7 | 1900 | ug/l | ND | 1.04 | | 0.21 | 0.41 | 1.11 | | 0.22 | 0.38 | 1.04 | | 0.21 | 0.39 | 1.03 | | 0.21 | ND | 1.08 | | 0.22 | 0.29 | 1 | | 0.2 | ND | 1.03 | | 0.21 |
| HEXACHLORO-1,3-BUTADIENE | 87-68-3 | 1000 | ug/l | ND | 1.04 | | 0.21 | ND | 1.11 | | 0.22 | ND | 1.04 | | 0.21 | ND | 1.03 | | 0.21 | ND | 1.08 | | 0.22 | ND | 1 | | 0.2 | ND | 1.03 | | 0.21 |
| HEXACHLOROBENZENE | 118-74-1 | 6 | ug/l | ND | 1.04 | | 0.21 | ND | 1.11 | | 0.22 | ND | 1.04 | | 0.21 | ND | 1.03 | | 0.21 | ND | 1.08 | | 0.22 | ND | 1 | | 0.2 | ND | 1.03 | | 0.21 |
| HEXACHLOROCYCLOPENTADIENE | 77-47-4 | 1800 | ug/l | ND | 1.04 | | 1 | ND | 1.11 | | 1.1 | ND | 1.04 | | 1 | ND | 1.03 | | 1 | ND | 1.08 | | 1.1 | ND | 1 | | 1 | ND | 1.03 | | 1 |
| HEXACHLOROETHANE | 67-72-1 | 100 | ug/l | ND | 1.04 | | 1 | ND | 1.11 | | 1.1 | ND | 1.04 | | 1 | ND | 1.03 | | 1 | ND | 1.08 | | 1.1 | ND | 1 | | 1 | ND | 1.03 | | 1 |
| HEXACHLOROPHENE (HCP) | 70-30-4 | NS | ug/l | ND | - | | 0 | ND | - | | 0 | ND | - | | 0 | ND | - | | 0 | ND | - | | 0 | ND | - | | 0 | ND | - | | 0 |
| HEXACHLOROPROPENE | 1888-71-7 | 5 | ug/l | ND | 1.04 | | 1 | ND | 1.11 | | 1.1 | ND | 1.04 | | 1 | ND | 1.03 | | 1 | ND | 1.08 | | 1.1 | ND | 1 | | 1 | ND | 1.03 | | 1 |
| INDENO(1,2,3-CD)PYRENE | 193-39-5 | 62 | ug/l | 0.92 | 1.04 | | 0.21 | ND | 1.11 | | 0.22 | ND | 1.04 | | 0.21 | 1.2 | 1.03 | | 0.21 | ND | 1.08 | | 0.22 | ND | 1 | | 0.2 | ND | 1.03 | | 0.21 |
| ISODRIN | 465-73-6 | 5 | ug/l | ND | 1.04 | | 1 | ND | 1.11 | | 1.1 | ND | 1.04 | | 1 | ND | 1.03 | | 1 | ND | 1.08 | | 1.1 | ND | 1 | | 1 | ND | 1.03 | | 1 |
| ISOSAFROLE | 120-58-1 | 5 | ug/l | ND | 1.04 | | 1 | ND | 1.11 | | 1.1 | ND | 1.04 | | 1 | ND | 1.03 | | 1 | ND | 1.08 | | 1.1 | ND | 1 | | 1 | ND | 1.03 | | 1 |
| M-DICHLOROBENZENE | 541-73-1 | 60000 | ug/l | ND | 1.04 | | 0.21 | ND | 1.11 | | 0.22 | ND | 1.04 | | 0.21 | ND | 1.03 | | 0.21 | ND | 1.08 | | 0.22 | ND | 1 | | 0.2 | ND | 1.03 | | 0.21 |
| M-DINITROBENZENE | 99-65-0 | 1000 | ug/l | ND | 1.04 | | 1 | ND | 1.11 | | 1.1 | ND | 1.04 | | 1 | ND | 1.03 | | 1 | ND | 1.08 | | 1.1 | ND | 1 | | 1 | ND | 1.03 | | 1 |
| METHANAMINE, N-METHYL-N-NITROSO | 62-75-9 | 0.13 | ug/l | ND | 1.04 | | ***1*** | ND | 1.11 | | ***1.1*** | ND | 1.04 | | ***1*** | ND | 1.03 | | ***1*** | ND | 1.08 | | ***1.1*** | ND | 1 | | ***1*** | ND | 1.03 | | ***1*** |
| METHAPYRILENE | 91-80-5 | NS | ug/l | ND | 1.04 | | 1 | ND | 1.11 | | 1.1 | ND | 1.04 | | 1 | ND | 1.03 | | 1 | ND | 1.08 | | 1.1 | ND | 1 | | 1 | ND | 1.03 | | 1 |
| METHYL METHANESULFONATE | 66-27-3 | 26 | ug/l | ND | 1.04 | | 1 | ND | 1.11 | | 1.1 | ND | 1.04 | | 1 | ND | 1.03 | | 1 | ND | 1.08 | | 1.1 | ND | 1 | | 1 | ND | 1.03 | | 1 |
| METHYL PARATHION | 298-00-0 | 200 | ug/l | ND | 1.04 | | 1 | ND | 1.11 | | 1.1 | ND | 1.04 | | 1 | ND | 1.03 | | 1 | ND | 1.08 | | 1.1 | ND | 1 | | 1 | ND | 1.03 | | 1 |
| NAPHTHALENE | 91-20-3 | 30000 | ug/l | ND | 1.04 | | 0.21 | ND | 1.11 | | 0.22 | ND | 1.04 | | 0.21 | ND | 1.03 | | 0.21 | ND | 1.08 | | 0.22 | 22 | 1 | | 0.2 | 0.093 | 1.03 | J | 0.21 |
| NITROBENZENE | 98-95-3 | 51000 | ug/l | ND | 1.04 | | 0.21 | ND | 1.11 | | 0.22 | ND | 1.04 | | 0.21 | ND | 1.03 | | 0.21 | ND | 1.08 | | 0.22 | ND | 1 | | 0.2 | ND | 1.03 | | 0.21 |
| N-NITROSODIETHYLAMINE | 55-18-5 | 0.043 | ug/l | ND | 1.04 | | ***1*** | ND | 1.11 | | ***1.1*** | ND | 1.04 | | ***1*** | ND | 1.03 | | ***1*** | ND | 1.08 | | ***1.1*** | ND | 1 | | ***1*** | ND | 1.03 | | ***1*** |
| N-NITROSODI-N-BUTYLAMINE | 924-16-3 | 11 | ug/l | ND | 1.04 | | 1 | ND | 1.11 | | 1.1 | ND | 1.04 | | 1 | ND | 1.03 | | 1 | ND | 1.08 | | 1.1 | ND | 1 | | 1 | ND | 1.03 | | 1 |
| N-NITROSODI-N-PROPYLAMINE | 621-64-7 | 370 | ug/l | ND | 1.04 | | 0.21 | ND | 1.11 | | 0.22 | ND | 1.04 | | 0.21 | ND | 1.03 | | 0.21 | ND | 1.08 | | 0.22 | ND | 1 | | 0.2 | ND | 1.03 | | 0.21 |
| N-NITROSODIPHENYLAMINE | 86-30-6 | 35000 | ug/l | 0.068 | 1.04 | J | 0.21 | ND | 1.11 | | 0.22 | ND | 1.04 | | 0.21 | ND | 1.03 | | 0.21 | ND | 1.08 | | 0.22 | ND | 1 | | 0.2 | ND | 1.03 | | 0.21 |
| N-NITROSOMETHYLETHYLAMINE | 10595-95-6 | NS | ug/l | ND | 1.04 | | 1 | ND | 1.11 | | 1.1 | ND | 1.04 | | 1 | ND | 1.03 | | 1 | ND | 1.08 | | 1.1 | ND | 1 | | 1 | ND | 1.03 | | 1 |
| N-NITROSOMORPHOLINE | 59-89-2 | NS | ug/l | ND | 1.04 | | 1 | ND | 1.11 | | 1.1 | ND | 1.04 | | 1 | ND | 1.03 | | 1 | ND | 1.08 | | 1.1 | ND | 1 | | 1 | ND | 1.03 | | 1 |
| N-NITROSOPIPERIDINE | 100-75-4 | NS | ug/l | ND | 1.04 | | 1 | ND | 1.11 | | 1.1 | ND | 1.04 | | 1 | ND | 1.03 | | 1 | ND | 1.08 | | 1.1 | ND | 1 | | 1 | ND | 1.03 | | 1 |
| N-NITROSOPYRROLIDINE | 930-55-2 | NS | ug/l | ND | 1.04 | | 1 | ND | 1.11 | | 1.1 | ND | 1.04 | | 1 | ND | 1.03 | | 1 | ND | 1.08 | | 1.1 | ND | 1 | | 1 | ND | 1.03 | | 1 |
| O,O,O-TRIETHYL PHOSPHOROTHIOATE | 126-68-1 | 5 | ug/l | ND | 1.04 | | 1 | ND | 1.11 | | 1.1 | ND | 1.04 | | 1 | ND | 1.03 | | 1 | ND | 1.08 | | 1.1 | ND | 1 | | 1 | ND | 1.03 | | 1 |
| O,O-DIETHYL O-PYRAZINYL PHOSPHOROTHIOATE | 297-97-2 | 5 | ug/l | ND | 1.04 | | 1 | ND | 1.11 | | 1.1 | ND | 1.04 | | 1 | ND | 1.03 | | 1 | ND | 1.08 | | 1.1 | ND | 1 | | 1 | ND | 1.03 | | 1 |
| O-TOLUIDINE | 95-53-4 | 11000 | ug/l | ND | 1.04 | | 1 | ND | 1.11 | | 1.1 | ND | 1.04 | | 1 | ND | 1.03 | | 1 | ND | 1.08 | | 1.1 | 1.3 | 1 | | 1 | ND | 1.03 | | 1 |
| P-CHLOROANILINE | 106-47-8 | 410 | ug/l | 0.086 | 1.04 | J | 1 | ND | 1.11 | | 1.1 | ND | 1.04 | | 1 | ND | 1.03 | | 1 | ND | 1.08 | | 1.1 | ND | 1 | | 1 | ND | 1.03 | | 1 |
| PENTACHLOROBENZENE | 608-93-5 | 740 | ug/l | ND | 1.04 | | 1 | ND | 1.11 | | 1.1 | ND | 1.04 | | 1 | ND | 1.03 | | 1 | ND | 1.08 | | 1.1 | ND | 1 | | 1 | ND | 1.03 | | 1 |
| PENTACHLORONITROBENZENE | 82-68-8 | 440 | ug/l | ND | 1.04 | | 1 | ND | 1.11 | | 1.1 | ND | 1.04 | | 1 | ND | 1.03 | | 1 | ND | 1.08 | | 1.1 | ND | 1 | | 1 | ND | 1.03 | | 1 |
| PENTACHLOROPHENOL | 87-86-5 | 1000 | ug/l | ND | 1.04 | | 1 | ND | 1.11 | | 1.1 | ND | 1.04 | | 1 | ND | 1.03 | | 1 | ND | 1.08 | | 1.1 | ND | 1 | | 1 | ND | 1.03 | | 1 |
| PHENACETIN | 62-44-2 | 760000 | ug/l | ND | 1.04 | | 1 | ND | 1.11 | | 1.1 | ND | 1.04 | | 1 | ND | 1.03 | | 1 | ND | 1.08 | | 1.1 | ND | 1 | | 1 | ND | 1.03 | | 1 |
| PHENANTHRENE | 85-01-8 | 1100 | ug/l | 0.13 | 1.04 | J | 0.21 | ND | 1.11 | | 0.22 | 0.067 | 1.04 | J | 0.21 | 0.091 | 1.03 | J | 0.21 | 0.12 | 1.08 | JB | 0.22 | 0.26 | 1 | B | 0.2 | 0.073 | 1.03 | J | 0.21 |
| PHENOL | 108-95-2 | 400000 | ug/l | ND | 1.04 | | 0.21 | ND | 1.11 | | 0.22 | ND | 1.04 | | 0.21 | ND | 1.03 | | 0.21 | ND | 1.08 | | 0.22 | 1.3 | 1 | | 0.2 | ND | 1.03 | | 0.21 |
| PHORATE | 298-02-2 | 4.1 | ug/l | ND | 1.04 | | 1 | ND | 1.11 | | 1.1 | ND | 1.04 | | 1 | ND | 1.03 | | 1 | ND | 1.08 | | 1.1 | ND | 1 | | 1 | ND | 1.03 | | 1 |
| P-NITROANILINE | 100-01-6 | 5.8 | ug/l | 0.16 | 1.04 | J | 5.2 | ND | 1.11 | | 5.6 | ND | 1.04 | | 5.2 | ND | 1.03 | | 5.2 | ND | 1.08 | | 5.4 | ND | 1 | | 5 | ND | 1.03 | | 5.2 |
| P-PHENYLENEDIAMINE | 106-50-3 | NS | ug/l | ND | 1.04 | | 42 | ND | 1.11 | | 44 | ND | 1.04 | | 42 | ND | 1.03 | | 41 | ND | 1.08 | | 43 | ND | 1 | | 40 | ND | 1.03 | | 41 |
| PROPYZAMIDE | 23950-58-5 | 50 | ug/l | ND | 1.04 | | 1 | ND | 1.11 | | 1.1 | ND | 1.04 | | 1 | ND | 1.03 | | 1 | ND | 1.08 | | 1.1 | ND | 1 | | 1 | ND | 1.03 | | 1 |
| PYRENE | 129-00-0 | 130 | ug/l | 0.18 | 1.04 | J | 0.21 | ND | 1.11 | | 0.22 | ND | 1.04 | | 0.21 | 0.24 | 1.03 | | 0.21 | ND | 1.08 | | 0.22 | 0.1 | 1 | J | 0.2 | ND | 1.03 | | 0.21 |
| PYRIDINE | 110-86-1 | 200 | ug/l | ND | 1.04 | | 1 | ND | 1.11 | | 1.1 | ND | 1.04 | | 1 | ND | 1.03 | | 1 | ND | 1.08 | | 1.1 | ND | 1 | | 1 | ND | 1.03 | | 1 |
| SAFROLE | 94-59-7 | NS | ug/l | ND | 1.04 | | 1 | ND | 1.11 | | 1.1 | ND | 1.04 | | 1 | ND | 1.03 | | 1 | ND | 1.08 | | 1.1 | ND | 1 | | 1 | ND | 1.03 | | 1 |
| SULFOTEP | 3689-24-5 | 10 | ug/l | ND | 1.04 | | 1 | ND | 1.11 | | 1.1 | ND | 1.04 | | 1 | ND | 1.03 | | 1 | ND | 1.08 | | 1.1 | ND | 1 | | 1 | ND | 1.03 | | 1 |
| ***RCRA APPENDIX IX METALS - Dissolved (Method 6010/7471)*** | | | | Result | DF | Q | RL | Result | DF | Q | RL | Result | DF | Q | RL | Result | DF | Q | RL | Result | DF | Q | RL | Result | DF | Q | RL | Result | DF | Q | RL |
| ANTIMONY | 7440-36-0 | 6000 | ug/l | 0.12 | 1 | JB | 2 | 0.18 | 1 | B | 2 | ND | 1 | | 2 | ND | 1 | | 2 | 0.25 | 1 | JB | 2 | 0.22 | 1 | JB | 2 | 0.29 | 1 | JB | 2 |
| ARSENIC | 7440-38-2 | 50000 | ug/l | 1.1 | 1 | | 1 | 3.8 | 1 | | 1 | ND | 1 | | 1 | 7.1 | 1 | | 1 | 0.3 | 1 | B | 1 | 39.6 | 1 | | 1 | 0.34 | 1 | B | 1 |
| BARIUM | 7440-39-3 | 2000000 | ug/l | 12.7 | 1 | | 10 | 123 | 1 | | 10 | 56 | 1 | | 10 | 42 | 1 | | 10 | 24.3 | 1 | | 10 | 56.8 | 1 | | 10 | 8 | 1 | B | 10 |
| BERYLLIUM | 7440-41-7 | 4000 | ug/l | ND | 1 | | 1 | ND | 1 | | 1 | ND | 1 | | 1 | ND | 1 | | 1 | ND | 1 | | 1 | ND | 1 | | 1 | ND | 1 | | 1 |
| CADMIUM | 7440-43-9 | 5000 | ug/l | 0.14 | 1 | B | 1 | 0.19 | 1 | B | 1 | ND | 1 | | 1 | ND | 1 | | 1 | ND | 1 | | 1 | ND | 1 | | 1 | 0.45 | 1 | B | 1 |
| CHROMIUM | 7440-47-3 | 100000 | ug/l | 3.3 | 1 | J | 2 | 3.6 | 1 | J | 2 | 3.4 | 1 | J | 2 | 3.4 | 1 | J | 2 | 4 | 1 | J | 2 | 4.2 | 1 | J | 2 | 4.8 | 1 | J | 2 |
| COBALT | 7440-48-4 | 2000000 | ug/l | 10.1 | 1 | | 0.5 | 7.6 | 1 | | 0.5 | 1.2 | 1 | | 0.5 | 0.25 | 1 | B | 0.5 | 0.21 | 1 | B | 0.5 | 0.25 | 1 | B | 0.5 | 1.8 | 1 | | 0.5 |
| COPPER | 7440-50-8 | 1000000 | ug/l | 0.48 | 1 | B | 2 | 0.51 | 1 | B | 2 | 0.81 | 1 | B | 2 | 0.68 | 1 | B | 2 | 0.66 | 1 | B | 2 | 0.57 | 1 | B | 2 | 1.3 | 1 | B | 2 |
| LEAD | 7439-92-1 | 5000 | ug/l | 0.25 | 1 | B | 1 | 0.14 | 1 | B | 1 | 0.19 | 1 | B | 1 | 0.14 | 1 | B | 1 | 0.032 | 1 | B | 1 | 0.15 | 1 | B | 1 | 0.33 | 1 | B | 1 |
| MERCURY | 7439-97-6 | 2000 | ug/l | 0.043 | 1 | JB | 0.2 | 0.019 | 1 | B | 0.2 | 0.024 | 1 | B | 0.2 | 0.02 | 1 | B | 0.2 | 0.028 | 1 | JB | 0.2 | 0.043 | 1 | JB | 0.2 | 0.054 | 1 | JB | 0.2 |
| NICKEL | 7440-02-0 | 100000 | ug/l | 5.4 | 1 | | 1 | 3.2 | 1 | | 1 | 1.5 | 1 | | 1 | 0.77 | 1 | B | 1 | 0.54 | 1 | B | 1 | 1.3 | 1 | | 1 | 4.1 | 1 | | 1 |
| SELENIUM | 7782-49-2 | 50000 | ug/l | ND | 1 | | 5 | ND | 1 | | 5 | ND | 1 | | 5 | 1.1 | 1 | B | 5 | 1.1 | 1 | B | 5 | 1.5 | 1 | B | 5 | ND | 1 | | 5 |
| SILVER | 7440-22-4 | 100000 | ug/l | ND | 1 | | 1 | ND | 1 | | 1 | ND | 1 | | 1 | ND | 1 | | 1 | ND | 1 | | 1 | ND | 1 | | 1 | ND | 1 | | 1 |
| THALLIUM | 7440-28-0 | 2000 | ug/l | 0.032 | 1 | B | 1 | 0.019 | 1 | B | 1 | 0.024 | 1 | B | 1 | ND | 1 | | 1 | 0.099 | 1 | JB | 1 | 0.053 | 1 | JB | 1 | 0.074 | 1 | B | 1 |
| TIN | 7440-31-5 | 61000000 | ug/l | 7.6 | 1 | J | 5 | 3.5 | 1 | JB | 5 | 2.6 | 1 | JB | 5 | 3.2 | 1 | JB | 5 | 6.7 | 1 | J | 5 | 4.8 | 1 | JB | 5 | 10.8 | 1 | J | 5 |
| VANADIUM (FUME OR DUST) | 7440-62-2 | 720000 | ug/l | 0.3 | 1 | B | 1 | ND | 1 | | 1 | 0.4 | 1 | B | 1 | ND | 1 | | 1 | ND | 1 | | 1 | ND | 1 | | 1 | 0.28 | 1 | B | 1 |
| ZINC | 7440-66-6 | 2000000 | ug/l | 37.1 | 1 | | 5 | 11.9 | 1 | J | 5 | 6.2 | 1 | J | 5 | 7.6 | 1 | J | 5 | 7.2 | 1 | | 5 | 4.4 | 1 | B | 5 | 18.9 | 1 | | 5 |

**Table 5**
**Summary of Groundwater Analytical Results - October 2008**
**Comparison to Pennsylvania Non-Residential Non-Use Aquifer Groundwater MSCs**
**U.S. Steel - RCRA Groundwater Sampling**
**Fairless Hills, Pennsylvania**

| | CAS No | PADEP Non-Residentail Non-Use Aquifer GW MSC | Location ID | MW6-20-37 | | | | MW6-2-27 | | | | MW6-26-20 | | | | MW6-4-29 | | | | MW6-5-28 | | | | MW6-6-24 | | | | MW6-8-28 | | | |
|---|---|---|---|---|---|---|---|---|---|---|---|---|---|---|---|---|---|---|---|---|---|---|---|---|---|---|---|---|---|---|---|
| | | | Sample ID | MW6-20-37_10-08-N | | | | MW6-2-27_10-08-N | | | | MW6-26-20_10-08-N | | | | MW6-4-29_10-08-N | | | | MW6-5-28_10-08-N | | | | MW6-6-24_10-08-N | | | | MW6-8-28_10-08-N | | | |
| | | | Sample Date | 10/17/2008 | | | | 10/14/2008 | | | | 10/14/2008 | | | | 10/15/2008 | | | | 10/15/2008 | | | | 10/15/2008 | | | | 10/15/2008 | | | |
| | | | Lab Id | C8J180168020 | | | | C8J160299001 | | | | C8J160299014 | | | | C8J180168004 | | | | C8J160299004 | | | | C8J160299003 | | | | C8J160299002 | | | |
| ***RCRA APPENDIX IX VOLATILE ORGANIC COMPOUNDS (Method 8260)*** | | | | Result | DF | Q | RL | Result | DF | Q | RL | Result | DF | Q | RL | Result | DF | Q | RL | Result | DF | Q | RL | Result | DF | Q | RL | Result | DF | Q | RL |
| 1,1,1,2-TETRACHLOROETHANE | 630-20-6 | 7000 | ug/l | ND | 1 | | 1 | ND | 1 | | 1 | ND | 1 | | 1 | ND | 1 | | 1 | ND | 1 | | 1 | ND | 1 | | 1 | ND | 1 | | 1 |
| 1,1,1-TRICHLOROETHANE | 71-55-6 | 2000 | ug/l | ND | 1 | | 1 | ND | 1 | | 1 | ND | 1 | | 1 | ND | 1 | | 1 | ND | 1 | | 1 | ND | 1 | | 1 | ND | 1 | | 1 |
| 1,1,2,2-TETRACHLOROETHANE | 79-34-5 | 30 | ug/l | ND | 1 | | 1 | ND | 1 | | 1 | ND | 1 | | 1 | ND | 1 | | 1 | ND | 1 | | 1 | ND | 1 | | 1 | ND | 1 | | 1 |
| 1,1,2-TRICHLOROETHANE | 79-00-5 | 50 | ug/l | ND | 1 | | 1 | ND | 1 | | 1 | ND | 1 | | 1 | ND | 1 | | 1 | ND | 1 | | 1 | ND | 1 | | 1 | ND | 1 | | 1 |
| 1,1-DICHLOROETHANE | 75-34-3 | 1100 | ug/l | ND | 1 | | 1 | 0.26 | 1 | J | 1 | ND | 1 | | 1 | ND | 1 | | 1 | ND | 1 | | 1 | 0.86 | 1 | J | 1 | 0.64 | 1 | J | 1 |
| 1,1-DICHLOROETHYLENE | 75-35-4 | 70 | ug/l | ND | 1 | | 1 | ND | 1 | | 1 | ND | 1 | | 1 | ND | 1 | | 1 | ND | 1 | | 1 | ND | 1 | | 1 | ND | 1 | | 1 |
| 1,2,3-TRICHLOROPROPANE | 96-18-4 | 4000 | ug/l | ND | 1 | | 1 | ND | 1 | | 1 | ND | 1 | | 1 | ND | 1 | | 1 | ND | 1 | | 1 | ND | 1 | | 1 | ND | 1 | | 1 |
| 1,2-DIBROMO-3-CHLOROPROPANE (DBCP) | 96-12-8 | 20 | ug/l | ND | 1 | | 1 | ND | 1 | | 1 | ND | 1 | | 1 | ND | 1 | | 1 | ND | 1 | | 1 | ND | 1 | | 1 | ND | 1 | | 1 |
| 1,2-DIBROMOETHANE | 106-93-4 | 5 | ug/l | ND | 1 | | 1 | ND | 1 | | 1 | ND | 1 | | 1 | ND | 1 | | 1 | ND | 1 | | 1 | ND | 1 | | 1 | ND | 1 | | 1 |
| 1,2-DICHLOROETHANE | 107-06-2 | 50 | ug/l | ND | 1 | | 1 | ND | 1 | | 1 | ND | 1 | | 1 | ND | 1 | | 1 | ND | 1 | | 1 | ND | 1 | | 1 | ND | 1 | | 1 |
| 1,2-DICHLOROPROPANE | 78-87-5 | 50 | ug/l | ND | 1 | | 1 | ND | 1 | | 1 | ND | 1 | | 1 | ND | 1 | | 1 | ND | 1 | | 1 | ND | 1 | | 1 | ND | 1 | | 1 |
| 1,4-DIOXANE | 123-91-1 | 240 | ug/l | ND | 1 | | 200 | ND | 1 | | 200 | ND | 1 | | 200 | ND | 1 | | 200 | ND | 1 | | 200 | ND | 1 | | 200 | ND | 1 | | 200 |
| 2-BUTANONE (MEK) | 78-93-3 | 580000 | ug/l | ND | 1 | | 5 | ND | 1 | | 5 | ND | 1 | | 5 | 0.5 | 1 | J | 5 | ND | 1 | | 5 | ND | 1 | | 5 | 0.57 | 1 | J | 5 |
| 2-CHLOR-1,3-BUTADIENE | 126-99-8 | 4100 | ug/l | ND | 1 | | 1 | ND | 1 | | 1 | ND | 1 | | 1 | ND | 1 | | 1 | ND | 1 | | 1 | ND | 1 | | 1 | ND | 1 | | 1 |
| 2-METHYL-1-PROPANOL | 78-83-1 | 610000 | ug/l | ND | 1 | | 40 | ND | 1 | | 40 | ND | 1 | | 40 | ND | 1 | | 40 | ND | 1 | | 40 | ND | 1 | | 40 | ND | 1 | | 40 |
| 4-METHYL-2-PENTANONE (MIBK) | 108-10-1 | 41000 | ug/l | ND | 1 | | 5 | ND | 1 | | 5 | ND | 1 | | 5 | ND | 1 | | 5 | ND | 1 | | 5 | ND | 1 | | 5 | ND | 1 | | 5 |
| ACETONE | 67-64-1 | 100000 | ug/l | 5.5 | 1 | | 5 | 3.6 | 1 | J | 5 | ND | 1 | | 5 | ND | 1 | | 5 | ND | 1 | | 5 | ND | 1 | | 5 | ND | 1 | | 5 |
| ACETONITRILE | 75-05-8 | 3500 | ug/l | ND | 1 | | 20 | ND | 1 | | 20 | ND | 1 | | 20 | ND | 1 | | 20 | ND | 1 | | 20 | ND | 1 | | 20 | ND | 1 | | 20 |
| ACROLEIN | 107-02-8 | 1.2 | ug/l | ND | 1 | | ***20*** | ND | 1 | | ***20*** | ND | 1 | | ***20*** | ND | 1 | | ***20*** | ND | 1 | | ***20*** | ND | 1 | | ***20*** | ND | 1 | | ***20*** |
| ACRYLONITRILE | 107-13-1 | 270 | ug/l | ND | 1 | | 20 | ND | 1 | | 20 | ND | 1 | | 20 | ND | 1 | | 20 | ND | 1 | | 20 | ND | 1 | | 20 | ND | 1 | | 20 |
| ALLYLCHLORIDE | 107-05-1 | 580 | ug/l | ND | 1 | | 1 | ND | 1 | | 1 | ND | 1 | | 1 | ND | 1 | | 1 | ND | 1 | | 1 | ND | 1 | | 1 | ND | 1 | | 1 |
| BENZENE | 71-43-2 | 500 | ug/l | ND | 1 | | 1 | ND | 1 | | 1 | ND | 1 | | 1 | ND | 1 | | 1 | ND | 1 | | 1 | ND | 1 | | 1 | ND | 1 | | 1 |
| BROMODICHLOROMETHANE | 75-27-4 | 100 | ug/l | ND | 1 | | 1 | ND | 1 | | 1 | ND | 1 | | 1 | ND | 1 | | 1 | ND | 1 | | 1 | ND | 1 | | 1 | ND | 1 | | 1 |
| BROMOMETHANE | 74-83-9 | 1000 | ug/l | ND | 1 | | 1 | ND | 1 | | 1 | ND | 1 | | 1 | ND | 1 | | 1 | ND | 1 | | 1 | ND | 1 | | 1 | ND | 1 | | 1 |
| CARBON DISULFIDE | 75-15-0 | 4100 | ug/l | ND | 1 | | 1 | ND | 1 | | 1 | ND | 1 | | 1 | ND | 1 | | 1 | ND | 1 | | 1 | ND | 1 | | 1 | ND | 1 | | 1 |
| CARBON TETRACHLORIDE | 56-23-5 | 50 | ug/l | ND | 1 | | 1 | ND | 1 | | 1 | ND | 1 | | 1 | ND | 1 | | 1 | ND | 1 | | 1 | ND | 1 | | 1 | ND | 1 | | 1 |
| CFC-11 | 75-69-4 | 200000 | ug/l | ND | 1 | | 1 | ND | 1 | | 1 | ND | 1 | | 1 | ND | 1 | | 1 | ND | 1 | | 1 | ND | 1 | | 1 | ND | 1 | | 1 |
| CFC-12 | 75-71-8 | 100000 | ug/l | ND | 1 | | 1 | ND | 1 | | 1 | ND | 1 | | 1 | ND | 1 | | 1 | ND | 1 | | 1 | ND | 1 | | 1 | ND | 1 | | 1 |
| CHLOROBENZENE | 108-90-7 | 10000 | ug/l | ND | 1 | | 1 | ND | 1 | | 1 | ND | 1 | | 1 | ND | 1 | | 1 | ND | 1 | | 1 | ND | 1 | | 1 | ND | 1 | | 1 |
| CHLORODIBROMOMETHANE | 124-48-1 | 10000 | ug/l | ND | 1 | | 1 | ND | 1 | | 1 | ND | 1 | | 1 | ND | 1 | | 1 | ND | 1 | | 1 | ND | 1 | | 1 | ND | 1 | | 1 |
| CHLOROETHANE | 75-00-3 | 90000 | ug/l | ND | 1 | | 1 | ND | 1 | | 1 | ND | 1 | | 1 | ND | 1 | | 1 | ND | 1 | | 1 | ND | 1 | | 1 | ND | 1 | | 1 |
| CHLOROFORM | 67-66-3 | 1000 | ug/l | ND | 1 | | 1 | ND | 1 | | 1 | ND | 1 | | 1 | ND | 1 | | 1 | ND | 1 | | 1 | ND | 1 | | 1 | ND | 1 | | 1 |
| CHLOROMETHANE | 74-87-3 | 300 | ug/l | ND | 1 | | 1 | ND | 1 | | 1 | ND | 1 | | 1 | ND | 1 | | 1 | ND | 1 | | 1 | ND | 1 | | 1 | ND | 1 | | 1 |
| CIS-1,3-DICHLOROPROPENE | 10061-01-5 | NS | ug/l | ND | 1 | | 1 | ND | 1 | | 1 | ND | 1 | | 1 | ND | 1 | | 1 | ND | 1 | | 1 | ND | 1 | | 1 | ND | 1 | | 1 |
| DIBROMOMETHANE | 74-95-3 | 20000 | ug/l | ND | 1 | | 1 | ND | 1 | | 1 | ND | 1 | | 1 | ND | 1 | | 1 | ND | 1 | | 1 | ND | 1 | | 1 | ND | 1 | | 1 |
| DICHLOROMETHANE | 75-09-2 | 500 | ug/l | ND | 1 | | 1 | ND | 1 | | 1 | ND | 1 | | 1 | ND | 1 | | 1 | ND | 1 | | 1 | ND | 1 | | 1 | ND | 1 | | 1 |
| ETHYL METHACRYLATE | 97-63-2 | 1800 | ug/l | ND | 1 | | 1 | ND | 1 | | 1 | ND | 1 | | 1 | ND | 1 | | 1 | ND | 1 | | 1 | ND | 1 | | 1 | ND | 1 | | 1 |
| ETHYLBENZENE | 100-41-4 | 70000 | ug/l | ND | 1 | | 1 | ND | 1 | | 1 | ND | 1 | | 1 | ND | 1 | | 1 | ND | 1 | | 1 | ND | 1 | | 1 | ND | 1 | | 1 |
| IODOMETHANE | 74-88-4 | 5 | ug/l | ND | 1 | | 1 | ND | 1 | | 1 | ND | 1 | | 1 | ND | 1 | | 1 | ND | 1 | | 1 | ND | 1 | | 1 | ND | 1 | | 1 |
| METHYL METHACRYLATE | 80-62-6 | 410000 | ug/l | ND | 1 | | 1 | ND | 1 | | 1 | ND | 1 | | 1 | ND | 1 | | 1 | ND | 1 | | 1 | ND | 1 | | 1 | ND | 1 | | 1 |
| METHYL N-BUTYL KETONE | 591-78-6 | 5 | ug/l | ND | 1 | | 5 | ND | 1 | | 5 | ND | 1 | | 5 | ND | 1 | | 5 | ND | 1 | | 5 | ND | 1 | | 5 | ND | 1 | | 5 |
| METHYLACRYLONITRILE | 126-98-7 | 4.1 | ug/l | ND | 1 | | 1 | ND | 1 | | 1 | ND | 1 | | 1 | ND | 1 | | 1 | ND | 1 | | 1 | ND | 1 | | 1 | ND | 1 | | 1 |
| PENTACHLOROETHANE | 76-01-7 | 5 | ug/l | ND | 1.04 | | 2.1 | ND | 1.05 | | 2.1 | ND | 1.04 | | 2.1 | ND | 1.05 | | 2.1 | ND | 1.05 | | 2.1 | ND | 1.08 | | 2.2 | ND | 1.03 | | 2.1 |
| PROPIONITRILE | 107-12-0 | 5 | ug/l | ND | 1 | | 2 | ND | 1 | | 2 | ND | 1 | | 2 | ND | 1 | | 2 | ND | 1 | | 2 | ND | 1 | | 2 | ND | 1 | | 2 |
| STYRENE (MONOMER) | 100-42-5 | 10000 | ug/l | ND | 1 | | 1 | ND | 1 | | 1 | ND | 1 | | 1 | ND | 1 | | 1 | ND | 1 | | 1 | ND | 1 | | 1 | ND | 1 | | 1 |
| TETRACHLOROETHENE | 127-18-4 | 50 | ug/l | ND | 1 | | 1 | ND | 1 | | 1 | ND | 1 | | 1 | ND | 1 | | 1 | 0.27 | 1 | J | 1 | 0.35 | 1 | J | 1 | 0.51 | 1 | J | 1 |
| TOLUENE | 108-88-3 | 100000 | ug/l | ND | 1 | | 1 | ND | 1 | | 1 | ND | 1 | | 1 | ND | 1 | | 1 | ND | 1 | | 1 | ND | 1 | | 1 | ND | 1 | | 1 |
| TRANS-1,2-DICHLOROETHENE | 156-60-5 | 1000 | ug/l | ND | 1 | | 1 | ND | 1 | | 1 | ND | 1 | | 1 | ND | 1 | | 1 | ND | 1 | | 1 | ND | 1 | | 1 | ND | 1 | | 1 |
| TRANS-1,3-DICHLOROPROPENE | 10061-02-6 | NS | ug/l | ND | 1 | | 1 | ND | 1 | | 1 | ND | 1 | | 1 | ND | 1 | | 1 | ND | 1 | | 1 | ND | 1 | | 1 | ND | 1 | | 1 |
| TRANS-1,4-DICHLOROBUTENE | 110-57-6 | 5 | ug/l | ND | 1 | | 1 | ND | 1 | | 1 | ND | 1 | | 1 | ND | 1 | | 1 | ND | 1 | | 1 | ND | 1 | | 1 | ND | 1 | | 1 |
| TRIBROMOMETHANE | 75-25-2 | 10000 | ug/l | ND | 1 | | 1 | ND | 1 | | 1 | ND | 1 | | 1 | ND | 1 | | 1 | ND | 1 | | 1 | ND | 1 | | 1 | ND | 1 | | 1 |
| TRICHLOROETHYLENE | 79-01-6 | 50 | ug/l | ND | 1 | | 1 | 0.82 | 1 | J | 1 | ND | 1 | | 1 | ND | 1 | | 1 | 1.5 | 1 | | 1 | 3 | 1 | | 1 | 3.7 | 1 | | 1 |
| VINYL ACETATE | 108-05-4 | 1200 | ug/l | ND | 1 | | 1 | ND | 1 | | 1 | ND | 1 | | 1 | ND | 1 | | 1 | ND | 1 | | 1 | ND | 1 | | 1 | ND | 1 | | 1 |
| VINYL CHLORIDE | 75-01-4 | 20 | ug/l | ND | 1 | | 1 | ND | 1 | | 1 | ND | 1 | | 1 | ND | 1 | | 1 | ND | 1 | | 1 | ND | 1 | | 1 | ND | 1 | | 1 |
| XYLENE (TOTAL) | 1330-20-7 | 180000 | ug/l | ND | 1 | | 3 | ND | 1 | | 3 | ND | 1 | | 3 | ND | 1 | | 3 | ND | 1 | | 3 | ND | 1 | | 3 | ND | 1 | | 3 |

**Table 5**
**Summary of Groundwater Analytical Results - October 2008**
**Comparison to Pennsylvania Non-Residential Non-Use Aquifer Groundwater MSCs**
**U.S. Steel - RCRA Groundwater Sampling**
**Fairless Hills, Pennsylvania**

| | CAS No | PADEP Non-Residentail Non-Use Aquifer GW MSC | Location ID | MW6-20-37 | | | | MW6-2-27 | | | | MW6-26-20 | | | | MW6-4-29 | | | | MW6-5-28 | | | | MW6-6-24 | | | | MW6-8-28 | | | |
|---|---|---|---|---|---|---|---|---|---|---|---|---|---|---|---|---|---|---|---|---|---|---|---|---|---|---|---|---|---|---|---|
| | | | Sample ID | MW6-20-37_10-08-N | | | | MW6-2-27_10-08-N | | | | MW6-26-20_10-08-N | | | | MW6-4-29_10-08-N | | | | MW6-5-28_10-08-N | | | | MW6-6-24_10-08-N | | | | MW6-8-28_10-08-N | | | |
| | | | Sample Date | 10/17/2008 | | | | 10/14/2008 | | | | 10/14/2008 | | | | 10/15/2008 | | | | 10/15/2008 | | | | 10/15/2008 | | | | 10/15/2008 | | | |
| | | | Lab Id | C8J180168020 | | | | C8J160299001 | | | | C8J160299014 | | | | C8J180168004 | | | | C8J160299004 | | | | C8J160299003 | | | | C8J160299002 | | | |
| ***RCRA APPENDIX IX SEMI-VOLATILE ORGANIC COMPOUNDS (Method 8270)*** | | | | Result | DF | Q | RL | Result | DF | Q | RL | Result | DF | Q | RL | Result | DF | Q | RL | Result | DF | Q | RL | Result | DF | Q | RL | Result | DF | Q | RL |
| 1,2,4,5-TETRACHLOROBENZENE | 95-94-3 | 580 | ug/l | ND | 1.04 | | 1 | ND | 1.05 | | 1 | ND | 1.04 | | 1 | ND | 1.05 | | 1 | ND | 1.05 | | 1 | ND | 1.08 | | 1.1 | ND | 1.03 | | 1 |
| 1,2,4-TRICHLOROBENZENE | 120-82-1 | 44000 | ug/l | ND | 1.04 | | 0.21 | ND | 1.05 | | 0.21 | ND | 1.04 | | 0.21 | 0.048 | 1.05 | J | 0.21 | 0.058 | 1.05 | J | 0.21 | ND | 1.08 | | 0.22 | ND | 1.03 | | 0.21 |
| 1,2-DICHLOROBENZENE | 95-50-1 | 60000 | ug/l | ND | 1.04 | | 0.21 | ND | 1.05 | | 0.21 | ND | 1.04 | | 0.21 | ND | 1.05 | | 0.21 | ND | 1.05 | | 0.21 | 0.12 | 1.08 | J | 0.22 | ND | 1.03 | | 0.21 |
| 1,3,5-TRINITROBENZENE | 99-35-4 | NS | ug/l | ND | 1.04 | | 1 | ND | 1.05 | | 1 | ND | 1.04 | | 1 | ND | 1.05 | | 1 | ND | 1.05 | | 1 | ND | 1.08 | | 1.1 | ND | 1.03 | | 1 |
| 1,4-DICHLOROBENZENE | 106-46-7 | 7500 | ug/l | 0.073 | 1.04 | J | 0.21 | ND | 1.05 | | 0.21 | 0.053 | 1.04 | J | 0.21 | 0.06 | 1.05 | J | 0.21 | ND | 1.05 | | 0.21 | ND | 1.08 | | 0.22 | ND | 1.03 | | 0.21 |
| 1,4-NAPHTHOQUINONE | 130-15-4 | 5 | ug/l | ND | 1.04 | | 1 | ND | 1.05 | | 1 | ND | 1.04 | | 1 | ND | 1.05 | | 1 | ND | 1.05 | | 1 | ND | 1.08 | | 1.1 | ND | 1.03 | | 1 |
| 1-NAPHTHYLAMINE | 134-32-7 | 1400 | ug/l | ND | 1.04 | | 1 | ND | 1.05 | | 1 | ND | 1.04 | | 1 | ND | 1.05 | | 1 | ND | 1.05 | | 1 | ND | 1.08 | | 1.1 | ND | 1.03 | | 1 |
| 2,4,5-TRICHLOROPHENOL | 95-95-4 | 1000000 | ug/l | ND | 1.04 | | 1 | ND | 1.05 | | 1 | ND | 1.04 | | 1 | 0.44 | 1.05 | J | 1 | 0.32 | 1.05 | J | 1 | ND | 1.08 | | 1.1 | ND | 1.03 | | 1 |
| 2,4,6-TRICHLOROPHENOL | 88-06-2 | 31000 | ug/l | ND | 1.04 | | 1 | ND | 1.05 | | 1 | ND | 1.04 | | 1 | 0.22 | 1.05 | J | 1 | 0.16 | 1.05 | J | 1 | ND | 1.08 | | 1.1 | ND | 1.03 | | 1 |
| 2,4-DICHLOROPHENOL | 120-83-2 | 20000 | ug/l | ND | 1.04 | | 0.21 | ND | 1.05 | | 0.21 | ND | 1.04 | | 0.21 | 0.31 | 1.05 | | 0.21 | 0.19 | 1.05 | J | 0.21 | ND | 1.08 | | 0.22 | ND | 1.03 | | 0.21 |
| 2,4-DIMETHYLPHENOL | 105-67-9 | 2000000 | ug/l | ND | 1.04 | | 1 | ND | 1.05 | | 1 | ND | 1.04 | | 1 | ND | 1.05 | | 1 | 0.18 | 1.05 | J | 1 | ND | 1.08 | | 1.1 | ND | 1.03 | | 1 |
| 2,4-DINITROPHENOL | 51-28-5 | 410 | ug/l | ND | 1.04 | | 5.2 | ND | 1.05 | | 5.2 | ND | 1.04 | | 5.2 | 1.6 | 1.05 | J | 5.2 | 1.6 | 1.05 | J | 5.2 | ND | 1.08 | | 5.4 | ND | 1.03 | | 5.2 |
| 2,4-DINITROTOLUENE | 121-14-2 | 8400 | ug/l | ND | 1.04 | | 1 | ND | 1.05 | | 1 | ND | 1.04 | | 1 | 0.56 | 1.05 | J | 1 | 0.59 | 1.05 | J | 1 | ND | 1.08 | | 1.1 | ND | 1.03 | | 1 |
| 2,6-DICHLOROPHENOL | 87-65-0 | NS | ug/l | ND | 1.04 | | 0.21 | ND | 1.05 | | 0.21 | ND | 1.04 | | 0.21 | ND | 1.05 | | 0.21 | ND | 1.05 | | 0.21 | ND | 1.08 | | 0.22 | ND | 1.03 | | 0.21 |
| 2,6-DINITROTOLUENE | 606-20-2 | 100000 | ug/l | ND | 1.04 | | 1 | ND | 1.05 | | 1 | ND | 1.04 | | 1 | 0.42 | 1.05 | J | 1 | 0.38 | 1.05 | J | 1 | ND | 1.08 | | 1.1 | ND | 1.03 | | 1 |
| 2-ACETYLAMINOFLUORENE | 53-96-3 | 680 | ug/l | ND | 1.04 | | 1 | ND | 1.05 | | 1 | ND | 1.04 | | 1 | ND | 1.05 | | 1 | ND | 1.05 | | 1 | ND | 1.08 | | 1.1 | ND | 1.03 | | 1 |
| 2-CHLORONAPHTHALENE | 91-58-7 | 8200 | ug/l | ND | 1.04 | | 0.21 | ND | 1.05 | | 0.21 | ND | 1.04 | | 0.21 | 0.14 | 1.05 | J | 0.21 | 0.12 | 1.05 | J | 0.21 | ND | 1.08 | | 0.22 | ND | 1.03 | | 0.21 |
| 2-CHLOROPHENOL | 95-57-8 | 40 | ug/l | ND | 1.04 | | 1 | ND | 1.05 | | 1 | ND | 1.04 | | 1 | ND | 1.05 | | 1 | 0.091 | 1.05 | J | 1 | ND | 1.08 | | 1.1 | ND | 1.03 | | 1 |
| 2-METHYL PYRIDINE (2-PICOLINE) | 109-06-8 | 5 | ug/l | ND | 1.04 | | 1 | ND | 1.05 | | 1 | ND | 1.04 | | 1 | ND | 1.05 | | 1 | ND | 1.05 | | 1 | ND | 1.08 | | 1.1 | ND | 1.03 | | 1 |
| 2-METHYLNAPHTHALENE | 91-57-6 | 2000 | ug/l | ND | 1.04 | | 0.21 | ND | 1.05 | | 0.21 | ND | 1.04 | | 0.21 | 0.11 | 1.05 | J | 0.21 | 0.096 | 1.05 | J | 0.21 | ND | 1.08 | | 0.22 | ND | 1.03 | | 0.21 |
| 2-METHYLPHENOL | 95-48-7 | 510000 | ug/l | ND | 1.04 | | 1 | ND | 1.05 | | 1 | ND | 1.04 | | 1 | 0.13 | 1.05 | J | 1 | 0.17 | 1.05 | J | 1 | ND | 1.08 | | 1.1 | ND | 1.03 | | 1 |
| 2-NAPHTHALENAMINE (2-NAPHTHYLAMINE) | 91-59-8 | 1400 | ug/l | ND | 1.04 | | 1 | ND | 1.05 | | 1 | ND | 1.04 | | 1 | ND | 1.05 | | 1 | ND | 1.05 | | 1 | ND | 1.08 | | 1.1 | ND | 1.03 | | 1 |
| 2-NITROANILINE | 88-74-4 | 5.8 | ug/l | ND | 1.04 | | 5.2 | ND | 1.05 | | 5.2 | ND | 1.04 | | 5.2 | 0.62 | 1.05 | J | 5.2 | 0.61 | 1.05 | J | 5.2 | ND | 1.08 | | 5.4 | ND | 1.03 | | 5.2 |
| 2-NITROPHENOL | 88-75-5 | 820000 | ug/l | ND | 1.04 | | 1 | ND | 1.05 | | 1 | ND | 1.04 | | 1 | 0.11 | 1.05 | J | 1 | 0.082 | 1.05 | J | 1 | ND | 1.08 | | 1.1 | ND | 1.03 | | 1 |
| 3,3'-DICHLOROBENZIDINE | 91-94-1 | 3100 | ug/l | ND | 1.04 | | 1 | ND | 1.05 | | 1 | ND | 1.04 | | 1 | ND | 1.05 | | 1 | ND | 1.05 | | 1 | ND | 1.08 | | 1.1 | ND | 1.03 | | 1 |
| 3,3'-DIMETHYLBENZIDINE | 119-93-7 | 280 | ug/l | ND | 1.04 | | 10 | ND | 1.05 | | 10 | ND | 1.04 | | 10 | ND | 1.05 | | 10 | ND | 1.05 | | 10 | ND | 1.08 | | 11 | ND | 1.03 | | 10 |
| 3,5,5-TRIMETHYL-2-CYCLOHEXENE-1-ONE | 78-59-1 | 100000 | ug/l | ND | 1.04 | | 1 | ND | 1.05 | | 1 | ND | 1.04 | | 1 | 0.087 | 1.05 | J | 1 | ND | 1.05 | | 1 | ND | 1.08 | | 1.1 | ND | 1.03 | | 1 |
| 3-METHYLCHLORANTHRENE | 56-49-5 | NS | ug/l | ND | 1.04 | | 1 | ND | 1.05 | | 1 | ND | 1.04 | | 1 | ND | 1.05 | | 1 | ND | 1.05 | | 1 | ND | 1.08 | | 1.1 | ND | 1.03 | | 1 |
| 3-Methylphenol & 4-Methylphenol | 65794-96-9 | NS | ug/l | ND | 1.04 | | 1 | ND | 1.05 | | 1 | ND | 1.04 | | 1 | 0.52 | 1.05 | J | 1 | 0.52 | 1.05 | J | 1 | ND | 1.08 | | 1.1 | ND | 1.03 | | 1 |
| 3-NITROANILINE | 99-09-2 | 5.8 | ug/l | ND | 1.04 | | 5.2 | ND | 1.05 | | 5.2 | ND | 1.04 | | 5.2 | 0.58 | 1.05 | J | 5.2 | 0.81 | 1.05 | J | 5.2 | ND | 1.08 | | 5.4 | ND | 1.03 | | 5.2 |
| 4,6-DINITRO-2-METHYLPHENOL | 534-52-1 | 5 | ug/l | ND | 1.04 | | ***5.2*** | ND | 1.05 | | ***5.2*** | ND | 1.04 | | ***5.2*** | ND | 1.05 | | ***5.2*** | ND | 1.05 | | ***5.2*** | ND | 1.08 | | ***5.4*** | ND | 1.03 | | ***5.2*** |
| 4-AMINOBIPHENYL | 92-67-1 | 120 | ug/l | ND | 1.04 | | 1 | ND | 1.05 | | 1 | ND | 1.04 | | 1 | ND | 1.05 | | 1 | ND | 1.05 | | 1 | ND | 1.08 | | 1.1 | ND | 1.03 | | 1 |
| 4-BROMOPHENYL PHENYL ETHER | 101-55-3 | 5 | ug/l | ND | 1.04 | | 1 | ND | 1.05 | | 1 | ND | 1.04 | | 1 | 0.32 | 1.05 | J | 1 | 0.4 | 1.05 | J | 1 | ND | 1.08 | | 1.1 | ND | 1.03 | | 1 |
| 4-CHLORO-3-METHYLPHENOL | 59-50-7 | 510 | ug/l | ND | 1.04 | | 1 | ND | 1.05 | | 1 | ND | 1.04 | | 1 | 0.38 | 1.05 | J | 1 | 0.35 | 1.05 | J | 1 | ND | 1.08 | | 1.1 | ND | 1.03 | | 1 |
| 4-CHLOROPHENYL PHENYL ETHER | 7005-72-3 | 5 | ug/l | ND | 1.04 | | 1 | ND | 1.05 | | 1 | ND | 1.04 | | 1 | 0.19 | 1.05 | J | 1 | 0.057 | 1.05 | J | 1 | ND | 1.08 | | 1.1 | ND | 1.03 | | 1 |
| 4-DIMETHYLAMINOAZOBENZENE | 60-11-7 | 570 | ug/l | ND | 1.04 | | 1 | ND | 1.05 | | 1 | ND | 1.04 | | 1 | ND | 1.05 | | 1 | ND | 1.05 | | 1 | ND | 1.08 | | 1.1 | ND | 1.03 | | 1 |
| 4-NITROPHENOL | 100-02-7 | 60000 | ug/l | ND | 1.04 | | 5.2 | ND | 1.05 | | 5.2 | ND | 1.04 | | 5.2 | 1.7 | 1.05 | J | 5.2 | 2 | 1.05 | J | 5.2 | ND | 1.08 | | 5.4 | ND | 1.03 | | 5.2 |
| 4-NITROQUINOLINE-N-OXIDE | 56-57-5 | 5 | ug/l | ND | 1.04 | | ***10*** | ND | 1.05 | | ***10*** | ND | 1.04 | | ***10*** | ND | 1.05 | | ***10*** | ND | 1.05 | | ***10*** | ND | 1.08 | | ***11*** | ND | 1.03 | | ***10*** |
| 5-NITRO-O-TOLUIDINE | 99-55-8 | NS | ug/l | ND | 1.04 | | 10 | ND | 1.05 | | 10 | ND | 1.04 | | 10 | ND | 1.05 | | 10 | ND | 1.05 | | 10 | ND | 1.08 | | 11 | ND | 1.03 | | 10 |
| 7,12-DIMETHYLBENZ(A)ANTHRACENE | 57-97-6 | NS | ug/l | ND | 1.04 | | 1 | ND | 1.05 | | 1 | ND | 1.04 | | 1 | ND | 1.05 | | 1 | ND | 1.05 | | 1 | ND | 1.08 | | 1.1 | ND | 1.03 | | 1 |
| a,a-Dimethylphenethylamine | 122-09-8 | 5 | ug/l | ND | 1.04 | | 1 | ND | 1.05 | | 1 | ND | 1.04 | | 1 | ND | 1.05 | | 1 | ND | 1.05 | | 1 | ND | 1.08 | | 1.1 | ND | 1.03 | | 1 |
| ACENAPHTHENE | 83-32-9 | 3800 | ug/l | ND | 1.04 | | 0.21 | 0.058 | 1.05 | J | 0.21 | 0.067 | 1.04 | J | 0.21 | 0.17 | 1.05 | J | 0.21 | 0.12 | 1.05 | J | 0.21 | ND | 1.08 | | 0.22 | ND | 1.03 | | 0.21 |
| ACENAPHTHYLENE | 208-96-8 | 16000 | ug/l | ND | 1.04 | | 0.21 | ND | 1.05 | | 0.21 | ND | 1.04 | | 0.21 | 0.12 | 1.05 | J | 0.21 | 0.092 | 1.05 | J | 0.21 | ND | 1.08 | | 0.22 | ND | 1.03 | | 0.21 |
| ACETOPHENONE | 98-86-2 | 10000 | ug/l | ND | 1.04 | | 1 | ND | 1.05 | | 1 | ND | 1.04 | | 1 | ND | 1.05 | | 1 | 0.12 | 1.05 | J | 1 | ND | 1.08 | | 1.1 | ND | 1.03 | | 1 |
| ANILINE | 62-53-3 | 5.8 | ug/l | ND | 1.04 | | 1 | ND | 1.05 | | 1 | ND | 1.04 | | 1 | ND | 1.05 | | 1 | 0.28 | 1.05 | J | 1 | ND | 1.08 | | 1.1 | ND | 1.03 | | 1 |
| ANTHRACENE | 120-12-7 | 66 | ug/l | ND | 1.04 | | 0.21 | 0.089 | 1.05 | J | 0.21 | ND | 1.04 | | 0.21 | 0.52 | 1.05 | | 0.21 | 0.56 | 1.05 | | 0.21 | ND | 1.08 | | 0.22 | ND | 1.03 | | 0.21 |
| ARAMITE | 140-57-8 | NS | ug/l | ND | 1.04 | | 1 | ND | 1.05 | | 1 | ND | 1.04 | | 1 | ND | 1.05 | | 1 | ND | 1.05 | | 1 | ND | 1.08 | | 1.1 | ND | 1.03 | | 1 |
| BENZO(A)ANTHRACENE | 56-55-3 | 11 | ug/l | ND | 1.04 | | 0.21 | 0.52 | 1.05 | | 0.21 | 0.054 | 1.04 | J | 0.21 | 0.77 | 1.05 | | 0.21 | 0.74 | 1.05 | | 0.21 | 0.048 | 1.08 | J | 0.22 | ND | 1.03 | | 0.21 |
| BENZO(A)PYRENE | 50-32-8 | 3.8 | ug/l | 0.59 | 1.04 | | 0.21 | 0.33 | 1.05 | | 0.21 | ND | 1.04 | | 0.21 | 0.96 | 1.05 | | 0.21 | 0.58 | 1.05 | | 0.21 | ND | 1.08 | | 0.22 | ND | 1.03 | | 0.21 |
| BENZO(B)FLUORANTHENE | 205-99-2 | 1.2 | ug/l | ND | 1.04 | | 0.21 | 0.84 | 1.05 | | 0.21 | 0.43 | 1.04 | | 0.21 | 1.1 | 1.05 | | 0.21 | 0.91 | 1.05 | | 0.21 | ND | 1.08 | | 0.22 | 0.38 | 1.03 | | 0.21 |
| BENZO(GHI)PERYLENE | 191-24-2 | 0.26 | ug/l | **0.63** | 1.04 | | 0.21 | **0.77** | 1.05 | | 0.21 | 0.25 | 1.04 | | 0.21 | **1.2** | 1.05 | | 0.21 | **0.95** | 1.05 | | 0.21 | ND | 1.08 | | 0.22 | ND | 1.03 | | 0.21 |
| BENZO(K)FLUORANTHENE | 207-08-9 | 0.55 | ug/l | ND | 1.04 | | 0.21 | 0.54 | 1.05 | | 0.21 | ND | 1.04 | | 0.21 | **1.3** | 1.05 | | 0.21 | **0.72** | 1.05 | | 0.21 | ND | 1.08 | | 0.22 | ND | 1.03 | | 0.21 |
| BENZYL ALCOHOL | 100-51-6 | 31000 | ug/l | ND | 1.04 | | 1 | ND | 1.05 | | 1 | ND | 1.04 | | 1 | ND | 1.05 | | 1 | ND | 1.05 | | 1 | ND | 1.08 | | 1.1 | ND | 1.03 | | 1 |
| BENZYL BUTYL PHTHALATE | 85-68-7 | 2700 | ug/l | 0.24 | 1.04 | J | 1 | 0.33 | 1.05 | J | 1 | 0.24 | 1.04 | J | 1 | 1.2 | 1.05 | | 1 | 1.1 | 1.05 | | 1 | 0.73 | 1.08 | J | 1.1 | 0.19 | 1.03 | J | 1 |
| BIS(2-CHLORO-1-METHYLETHYL) ETHER | 108-60-1 | 30000 | ug/l | ND | 1.04 | | 0.21 | ND | 1.05 | | 0.21 | ND | 1.04 | | 0.21 | ND | 1.05 | | 0.21 | 0.042 | 1.05 | J | 0.21 | ND | 1.08 | | 0.22 | ND | 1.03 | | 0.21 |
| BIS(2-CHLOROETHOXY)METHANE | 111-91-1 | 5 | ug/l | ND | 1.04 | | 1 | ND | 1.05 | | 1 | ND | 1.04 | | 1 | 0.19 | 1.05 | J | 1 | 0.18 | 1.05 | J | 1 | ND | 1.08 | | 1.1 | ND | 1.03 | | 1 |
| BIS(2-CHLOROETHYL) ETHER | 111-44-4 | 55 | ug/l | ND | 1.04 | | 0.21 | ND | 1.05 | | 0.21 | ND | 1.04 | | 0.21 | ND | 1.05 | | 0.21 | 0.13 | 1.05 | J | 0.21 | ND | 1.08 | | 0.22 | ND | 1.03 | | 0.21 |
| BIS(2-ETHYLHEXYL)PHTHALATE | 117-81-7 | 290 | ug/l | 1 | 1.04 | | 1 | 1.6 | 1.05 | | 1 | 0.3 | 1.04 | J | 1 | 1.3 | 1.05 | | 1 | 1.2 | 1.05 | | 1 | 0.8 | 1.08 | J | 1.1 | 1.2 | 1.03 | | 1 |
| CHLORDECONE (KEPONE) | 143-50-0 | 160 | ug/l | ND | 1.04 | | 4.2 | ND | 1.05 | | 4.2 | ND | 1.04 | | 4.2 | ND | 1.05 | | 4.2 | ND | 1.05 | | 4.2 | ND | 1.08 | | 4.3 | ND | 1.03 | | 4.1 |

**Table 5**
**Summary of Groundwater Analytical Results - October 2008**
**Comparison to Pennsylvania Non-Residential Non-Use Aquifer Groundwater MSCs**
**U.S. Steel - RCRA Groundwater Sampling**
**Fairless Hills, Pennsylvania**

| | CAS No | PADEP Non-Residentail Non-Use Aquifer GW MSC | Location ID | MW6-20-37 | | | | MW6-2-27 | | | | MW6-26-20 | | | | MW6-4-29 | | | | MW6-5-28 | | | | MW6-6-24 | | | | MW6-8-28 | | | |
|---|---|---|---|---|---|---|---|---|---|---|---|---|---|---|---|---|---|---|---|---|---|---|---|---|---|---|---|---|---|---|---|
| | | | Sample ID | MW6-20-37_10-08-N | | | | MW6-2-27_10-08-N | | | | MW6-26-20_10-08-N | | | | MW6-4-29_10-08-N | | | | MW6-5-28_10-08-N | | | | MW6-6-24_10-08-N | | | | MW6-8-28_10-08-N | | | |
| | | | Sample Date | 10/17/2008 | | | | 10/14/2008 | | | | 10/14/2008 | | | | 10/15/2008 | | | | 10/15/2008 | | | | 10/15/2008 | | | | 10/15/2008 | | | |
| | | | Lab Id | C8J180168020 | | | | C8J160299001 | | | | C8J160299014 | | | | C8J180168004 | | | | C8J160299004 | | | | C8J160299003 | | | | C8J160299002 | | | |
| ***RCRA APPENDIX IX SEMI-VOLATILE ORGANIC COMPOUNDS (Method 8270)*** | | | | Result | DF | Q | RL | Result | DF | Q | RL | Result | DF | Q | RL | Result | DF | Q | RL | Result | DF | Q | RL | Result | DF | Q | RL | Result | DF | Q | RL |
| CHLOROBENZILATE | 510-15-6 | 9600 | ug/l | ND | 1.04 | | 1 | ND | 1.05 | | 1 | ND | 1.04 | | 1 | ND | 1.05 | | 1 | ND | 1.05 | | 1 | ND | 1.08 | | 1.1 | ND | 1.03 | | 1 |
| CHLOROPHENOLS | 58-90-2 | 61000 | ug/l | ND | 1.04 | | 1 | ND | 1.05 | | 1 | ND | 1.04 | | 1 | 0.38 | 1.05 | J | 1 | 0.45 | 1.05 | J | 1 | ND | 1.08 | | 1.1 | ND | 1.03 | | 1 |
| CHRYSENE | 218-01-9 | 1.9 | ug/l | ND | 1.04 | | 0.21 | 0.62 | 1.05 | | 0.21 | 0.049 | 1.04 | J | 0.21 | 0.85 | 1.05 | | 0.21 | 0.75 | 1.05 | | 0.21 | ND | 1.08 | | 0.22 | ND | 1.03 | | 0.21 |
| CYGON | 60-51-5 | 20000 | ug/l | ND | 1.04 | | 1 | ND | 1.05 | | 1 | ND | 1.04 | | 1 | ND | 1.05 | | 1 | ND | 1.05 | | 1 | ND | 1.08 | | 1.1 | ND | 1.03 | | 1 |
| DIALLATE | 2303-16-4 | 1000 | ug/l | ND | 1.04 | | 1 | ND | 1.05 | | 1 | ND | 1.04 | | 1 | ND | 1.05 | | 1 | ND | 1.05 | | 1 | ND | 1.08 | | 1.1 | ND | 1.03 | | 1 |
| DIBENZO(A,H)ANTHRACENE | 53-70-3 | 0.6 | ug/l | **0.97** | 1.04 | | 0.21 | **0.9** | 1.05 | | 0.21 | ND | 1.04 | | 0.21 | **1.3** | 1.05 | | 0.21 | **1** | 1.05 | | 0.21 | ND | 1.08 | | 0.22 | ND | 1.03 | | 0.21 |
| DIBENZOFURAN | 132-64-9 | 5 | ug/l | ND | 1.04 | | 1 | 0.063 | 1.05 | J | 1 | 0.092 | 1.04 | J | 1 | 0.26 | 1.05 | J | 1 | 0.22 | 1.05 | J | 1 | ND | 1.08 | | 1.1 | ND | 1.03 | | 1 |
| DIETHYL PHTHALATE | 84-66-2 | 1100000 | ug/l | ND | 1.04 | | 1 | ND | 1.05 | | 1 | ND | 1.04 | | 1 | 0.63 | 1.05 | J | 1 | 0.63 | 1.05 | J | 1 | ND | 1.08 | | 1.1 | ND | 1.03 | | 1 |
| DIMETHYL PHTHALATE | 131-11-3 | 5 | ug/l | ND | 1.04 | | 1 | ND | 1.05 | | 1 | ND | 1.04 | | 1 | 0.42 | 1.05 | J | 1 | 0.45 | 1.05 | J | 1 | ND | 1.08 | | 1.1 | ND | 1.03 | | 1 |
| DI-N-BUTYL PHTHALATE | 84-74-2 | 400000 | ug/l | 0.12 | 1.04 | J | 1 | 0.19 | 1.05 | J | 1 | 0.14 | 1.04 | J | 1 | 0.82 | 1.05 | J | 1 | 0.87 | 1.05 | J | 1 | 0.1 | 1.08 | J | 1.1 | 0.074 | 1.03 | J | 1 |
| DINITROBUTYL PHENOL | 88-85-7 | 700 | ug/l | ND | 1.04 | | 1 | ND | 1.05 | | 1 | ND | 1.04 | | 1 | ND | 1.05 | | 1 | ND | 1.05 | | 1 | ND | 1.08 | | 1.1 | ND | 1.03 | | 1 |
| DI-N-OCTYL PHTHALATE | 117-84-0 | 3000 | ug/l | ND | 1.04 | | 1 | 0.7 | 1.05 | J | 1 | 0.47 | 1.04 | J | 1 | 1.4 | 1.05 | | 1 | 1.1 | 1.05 | | 1 | 0.47 | 1.08 | J | 1.1 | ND | 1.03 | | 1 |
| DISULFOTON | 298-04-4 | 30 | ug/l | ND | 1.04 | | 1 | ND | 1.05 | | 1 | ND | 1.04 | | 1 | ND | 1.05 | | 1 | ND | 1.05 | | 1 | ND | 1.08 | | 1.1 | ND | 1.03 | | 1 |
| ETHYL METHANESULFONATE | 62-50-0 | 5 | ug/l | ND | 1.04 | | 1 | ND | 1.05 | | 1 | ND | 1.04 | | 1 | ND | 1.05 | | 1 | ND | 1.05 | | 1 | ND | 1.08 | | 1.1 | ND | 1.03 | | 1 |
| ETHYL PARATHION (PARATHION) | 56-38-2 | 610 | ug/l | ND | 1.04 | | 1 | ND | 1.05 | | 1 | ND | 1.04 | | 1 | ND | 1.05 | | 1 | ND | 1.05 | | 1 | ND | 1.08 | | 1.1 | ND | 1.03 | | 1 |
| FAMPHUR | 52-85-7 | 5 | ug/l | ND | 1.04 | | ***10*** | ND | 1.05 | | ***10*** | ND | 1.04 | | ***10*** | ND | 1.05 | | ***10*** | ND | 1.05 | | ***10*** | ND | 1.08 | | ***11*** | ND | 1.03 | | ***10*** |
| FLUORANTHENE | 206-44-0 | 260 | ug/l | ND | 1.04 | | 0.21 | 0.3 | 1.05 | | 0.21 | 0.058 | 1.04 | J | 0.21 | 1.1 | 1.05 | | 0.21 | 0.69 | 1.05 | | 0.21 | 0.089 | 1.08 | J | 0.22 | ND | 1.03 | | 0.21 |
| FLUORENE | 86-73-7 | 1900 | ug/l | ND | 1.04 | | 0.21 | 0.061 | 1.05 | J | 0.21 | 0.078 | 1.04 | J | 0.21 | 0.25 | 1.05 | | 0.21 | 0.25 | 1.05 | | 0.21 | ND | 1.08 | | 0.22 | ND | 1.03 | | 0.21 |
| HEXACHLORO-1,3-BUTADIENE | 87-68-3 | 1000 | ug/l | ND | 1.04 | | 0.21 | ND | 1.05 | | 0.21 | ND | 1.04 | | 0.21 | ND | 1.05 | | 0.21 | ND | 1.05 | | 0.21 | ND | 1.08 | | 0.22 | ND | 1.03 | | 0.21 |
| HEXACHLOROBENZENE | 118-74-1 | 6 | ug/l | ND | 1.04 | | 0.21 | ND | 1.05 | | 0.21 | ND | 1.04 | | 0.21 | 0.27 | 1.05 | | 0.21 | 0.33 | 1.05 | | 0.21 | ND | 1.08 | | 0.22 | ND | 1.03 | | 0.21 |
| HEXACHLOROCYCLOPENTADIENE | 77-47-4 | 1800 | ug/l | ND | 1.04 | | 1 | ND | 1.05 | | 1 | ND | 1.04 | | 1 | ND | 1.05 | | 1 | ND | 1.05 | | 1 | ND | 1.08 | | 1.1 | ND | 1.03 | | 1 |
| HEXACHLOROETHANE | 67-72-1 | 100 | ug/l | ND | 1.04 | | 1 | ND | 1.05 | | 1 | ND | 1.04 | | 1 | ND | 1.05 | | 1 | ND | 1.05 | | 1 | ND | 1.08 | | 1.1 | ND | 1.03 | | 1 |
| HEXACHLOROPHENE (HCP) | 70-30-4 | NS | ug/l | ND | - | | 0 | ND | - | | 0 | ND | - | | 0 | ND | - | | 0 | ND | - | | 0 | ND | - | | 0 | ND | - | | 0 |
| HEXACHLOROPROPENE | 1888-71-7 | 5 | ug/l | ND | 1.04 | | 1 | ND | 1.05 | | 1 | ND | 1.04 | | 1 | ND | 1.05 | | 1 | ND | 1.05 | | 1 | ND | 1.08 | | 1.1 | ND | 1.03 | | 1 |
| INDENO(1,2,3-CD)PYRENE | 193-39-5 | 62 | ug/l | 0.86 | 1.04 | | 0.21 | 0.84 | 1.05 | | 0.21 | 0.42 | 1.04 | | 0.21 | 1.3 | 1.05 | | 0.21 | 1 | 1.05 | | 0.21 | ND | 1.08 | | 0.22 | ND | 1.03 | | 0.21 |
| ISODRIN | 465-73-6 | 5 | ug/l | ND | 1.04 | | 1 | ND | 1.05 | | 1 | ND | 1.04 | | 1 | ND | 1.05 | | 1 | ND | 1.05 | | 1 | ND | 1.08 | | 1.1 | ND | 1.03 | | 1 |
| ISOSAFROLE | 120-58-1 | 5 | ug/l | ND | 1.04 | | 1 | ND | 1.05 | | 1 | ND | 1.04 | | 1 | ND | 1.05 | | 1 | ND | 1.05 | | 1 | ND | 1.08 | | 1.1 | ND | 1.03 | | 1 |
| M-DICHLOROBENZENE | 541-73-1 | 60000 | ug/l | 0.046 | 1.04 | J | 0.21 | ND | 1.05 | | 0.21 | ND | 1.04 | | 0.21 | ND | 1.05 | | 0.21 | ND | 1.05 | | 0.21 | ND | 1.08 | | 0.22 | ND | 1.03 | | 0.21 |
| M-DINITROBENZENE | 99-65-0 | 1000 | ug/l | ND | 1.04 | | 1 | ND | 1.05 | | 1 | ND | 1.04 | | 1 | 0.35 | 1.05 | J | 1 | 0.47 | 1.05 | J | 1 | ND | 1.08 | | 1.1 | ND | 1.03 | | 1 |
| METHANAMINE, N-METHYL-N-NITROSO | 62-75-9 | 0.13 | ug/l | ND | 1.04 | | ***1*** | ND | 1.05 | | ***1*** | ND | 1.04 | | ***1*** | ND | 1.05 | | ***1*** | ND | 1.05 | | ***1*** | ND | 1.08 | | ***1.1*** | ND | 1.03 | | ***1*** |
| METHAPYRILENE | 91-80-5 | NS | ug/l | ND | 1.04 | | 1 | ND | 1.05 | | 1 | ND | 1.04 | | 1 | ND | 1.05 | | 1 | ND | 1.05 | | 1 | ND | 1.08 | | 1.1 | ND | 1.03 | | 1 |
| METHYL METHANESULFONATE | 66-27-3 | 26 | ug/l | ND | 1.04 | | 1 | ND | 1.05 | | 1 | ND | 1.04 | | 1 | ND | 1.05 | | 1 | ND | 1.05 | | 1 | ND | 1.08 | | 1.1 | ND | 1.03 | | 1 |
| METHYL PARATHION | 298-00-0 | 200 | ug/l | ND | 1.04 | | 1 | ND | 1.05 | | 1 | ND | 1.04 | | 1 | ND | 1.05 | | 1 | ND | 1.05 | | 1 | ND | 1.08 | | 1.1 | ND | 1.03 | | 1 |
| NAPHTHALENE | 91-20-3 | 30000 | ug/l | ND | 1.04 | | 0.21 | 0.14 | 1.05 | J | 0.21 | 0.053 | 1.04 | J | 0.21 | 0.13 | 1.05 | J | 0.21 | 0.097 | 1.05 | J | 0.21 | ND | 1.08 | | 0.22 | ND | 1.03 | | 0.21 |
| NITROBENZENE | 98-95-3 | 51000 | ug/l | ND | 1.04 | | 0.21 | ND | 1.05 | | 0.21 | ND | 1.04 | | 0.21 | 0.14 | 1.05 | J | 0.21 | 0.21 | 1.05 | | 0.21 | ND | 1.08 | | 0.22 | ND | 1.03 | | 0.21 |
| N-NITROSODIETHYLAMINE | 55-18-5 | 0.043 | ug/l | ND | 1.04 | | ***1*** | ND | 1.05 | | ***1*** | ND | 1.04 | | ***1*** | ND | 1.05 | | ***1*** | ND | 1.05 | | ***1*** | ND | 1.08 | | ***1.1*** | ND | 1.03 | | ***1*** |
| N-NITROSODI-N-BUTYLAMINE | 924-16-3 | 11 | ug/l | ND | 1.04 | | 1 | ND | 1.05 | | 1 | ND | 1.04 | | 1 | ND | 1.05 | | 1 | ND | 1.05 | | 1 | 0.24 | 1.08 | J | 1.1 | ND | 1.03 | | 1 |
| N-NITROSODI-N-PROPYLAMINE | 621-64-7 | 370 | ug/l | ND | 1.04 | | 0.21 | ND | 1.05 | | 0.21 | ND | 1.04 | | 0.21 | ND | 1.05 | | 0.21 | ND | 1.05 | | 0.21 | ND | 1.08 | | 0.22 | ND | 1.03 | | 0.21 |
| N-NITROSODIPHENYLAMINE | 86-30-6 | 35000 | ug/l | ND | 1.04 | | 0.21 | ND | 1.05 | | 0.21 | ND | 1.04 | | 0.21 | 0.5 | 1.05 | | 0.21 | 0.49 | 1.05 | | 0.21 | ND | 1.08 | | 0.22 | ND | 1.03 | | 0.21 |
| N-NITROSOMETHYLETHYLAMINE | 10595-95-6 | NS | ug/l | ND | 1.04 | | 1 | ND | 1.05 | | 1 | ND | 1.04 | | 1 | ND | 1.05 | | 1 | ND | 1.05 | | 1 | ND | 1.08 | | 1.1 | ND | 1.03 | | 1 |
| N-NITROSOMORPHOLINE | 59-89-2 | NS | ug/l | ND | 1.04 | | 1 | ND | 1.05 | | 1 | ND | 1.04 | | 1 | ND | 1.05 | | 1 | ND | 1.05 | | 1 | ND | 1.08 | | 1.1 | ND | 1.03 | | 1 |
| N-NITROSOPIPERIDINE | 100-75-4 | NS | ug/l | ND | 1.04 | | 1 | ND | 1.05 | | 1 | ND | 1.04 | | 1 | ND | 1.05 | | 1 | ND | 1.05 | | 1 | ND | 1.08 | | 1.1 | ND | 1.03 | | 1 |
| N-NITROSOPYRROLIDINE | 930-55-2 | NS | ug/l | ND | 1.04 | | 1 | ND | 1.05 | | 1 | ND | 1.04 | | 1 | ND | 1.05 | | 1 | ND | 1.05 | | 1 | ND | 1.08 | | 1.1 | ND | 1.03 | | 1 |
| O,O,O-TRIETHYL PHOSPHOROTHIOATE | 126-68-1 | 5 | ug/l | ND | 1.04 | | 1 | ND | 1.05 | | 1 | ND | 1.04 | | 1 | ND | 1.05 | | 1 | ND | 1.05 | | 1 | ND | 1.08 | | 1.1 | ND | 1.03 | | 1 |
| O,O-DIETHYL O-PYRAZINYL PHOSPHOROTHIOATE | 297-97-2 | 5 | ug/l | ND | 1.04 | | 1 | ND | 1.05 | | 1 | ND | 1.04 | | 1 | ND | 1.05 | | 1 | ND | 1.05 | | 1 | ND | 1.08 | | 1.1 | ND | 1.03 | | 1 |
| O-TOLUIDINE | 95-53-4 | 11000 | ug/l | ND | 1.04 | | 1 | ND | 1.05 | | 1 | ND | 1.04 | | 1 | ND | 1.05 | | 1 | ND | 1.05 | | 1 | ND | 1.08 | | 1.1 | ND | 1.03 | | 1 |
| P-CHLOROANILINE | 106-47-8 | 410 | ug/l | ND | 1.04 | | 1 | 0.054 | 1.05 | J | 1 | ND | 1.04 | | 1 | 0.4 | 1.05 | J | 1 | 0.51 | 1.05 | J | 1 | ND | 1.08 | | 1.1 | ND | 1.03 | | 1 |
| PENTACHLOROBENZENE | 608-93-5 | 740 | ug/l | ND | 1.04 | | 1 | ND | 1.05 | | 1 | ND | 1.04 | | 1 | ND | 1.05 | | 1 | ND | 1.05 | | 1 | ND | 1.08 | | 1.1 | ND | 1.03 | | 1 |
| PENTACHLORONITROBENZENE | 82-68-8 | 440 | ug/l | ND | 1.04 | | 1 | ND | 1.05 | | 1 | ND | 1.04 | | 1 | ND | 1.05 | | 1 | ND | 1.05 | | 1 | ND | 1.08 | | 1.1 | ND | 1.03 | | 1 |
| PENTACHLOROPHENOL | 87-86-5 | 1000 | ug/l | ND | 1.04 | | 1 | ND | 1.05 | | 1 | 0.29 | 1.04 | J | 1 | 0.8 | 1.05 | J | 1 | 0.86 | 1.05 | J | 1 | ND | 1.08 | | 1.1 | ND | 1.03 | | 1 |
| PHENACETIN | 62-44-2 | 760000 | ug/l | ND | 1.04 | | 1 | ND | 1.05 | | 1 | ND | 1.04 | | 1 | ND | 1.05 | | 1 | ND | 1.05 | | 1 | ND | 1.08 | | 1.1 | ND | 1.03 | | 1 |
| PHENANTHRENE | 85-01-8 | 1100 | ug/l | 0.097 | 1.04 | J | 0.21 | 0.31 | 1.05 | B | 0.21 | 0.18 | 1.04 | JB | 0.21 | 0.72 | 1.05 | B | 0.21 | 0.61 | 1.05 | B | 0.21 | 0.14 | 1.08 | JB | 0.22 | 0.14 | 1.03 | JB | 0.21 |
| PHENOL | 108-95-2 | 400000 | ug/l | ND | 1.04 | | 0.21 | 0.053 | 1.05 | J | 0.21 | ND | 1.04 | | 0.21 | 0.32 | 1.05 | | 0.21 | 0.28 | 1.05 | | 0.21 | ND | 1.08 | | 0.22 | ND | 1.03 | | 0.21 |
| PHORATE | 298-02-2 | 4.1 | ug/l | ND | 1.04 | | 1 | ND | 1.05 | | 1 | ND | 1.04 | | 1 | ND | 1.05 | | 1 | ND | 1.05 | | 1 | ND | 1.08 | | 1.1 | ND | 1.03 | | 1 |
| P-NITROANILINE | 100-01-6 | 5.8 | ug/l | ND | 1.04 | | 5.2 | ND | 1.05 | | 5.2 | ND | 1.04 | | 5.2 | 0.57 | 1.05 | J | 5.2 | 1 | 1.05 | J | 5.2 | ND | 1.08 | | 5.4 | ND | 1.03 | | 5.2 |
| P-PHENYLENEDIAMINE | 106-50-3 | NS | ug/l | ND | 1.04 | | 42 | ND | 1.05 | | 42 | ND | 1.04 | | 42 | ND | 1.05 | | 42 | ND | 1.05 | | 42 | ND | 1.08 | | 43 | ND | 1.03 | | 41 |
| PROPYZAMIDE | 23950-58-5 | 50 | ug/l | ND | 1.04 | | 1 | ND | 1.05 | | 1 | ND | 1.04 | | 1 | ND | 1.05 | | 1 | ND | 1.05 | | 1 | ND | 1.08 | | 1.1 | ND | 1.03 | | 1 |
| PYRENE | 129-00-0 | 130 | ug/l | ND | 1.04 | | 0.21 | 0.29 | 1.05 | | 0.21 | ND | 1.04 | | 0.21 | 0.98 | 1.05 | | 0.21 | 0.79 | 1.05 | | 0.21 | 0.1 | 1.08 | J | 0.22 | ND | 1.03 | | 0.21 |
| PYRIDINE | 110-86-1 | 200 | ug/l | ND | 1.04 | | 1 | ND | 1.05 | | 1 | 0.14 | 1.04 | J | 1 | 0.15 | 1.05 | J | 1 | 0.66 | 1.05 | J | 1 | ND | 1.08 | | 1.1 | ND | 1.03 | | 1 |
| SAFROLE | 94-59-7 | NS | ug/l | ND | 1.04 | | 1 | ND | 1.05 | | 1 | ND | 1.04 | | 1 | ND | 1.05 | | 1 | ND | 1.05 | | 1 | ND | 1.08 | | 1.1 | ND | 1.03 | | 1 |
| SULFOTEP | 3689-24-5 | 10 | ug/l | ND | 1.04 | | 1 | ND | 1.05 | | 1 | ND | 1.04 | | 1 | ND | 1.05 | | 1 | ND | 1.05 | | 1 | ND | 1.08 | | 1.1 | ND | 1.03 | | 1 |
| ***RCRA APPENDIX IX METALS - Dissolved (Method 6010/7471)*** | | | | Result | DF | Q | RL | Result | DF | Q | RL | Result | DF | Q | RL | Result | DF | Q | RL | Result | DF | Q | RL | Result | DF | Q | RL | Result | DF | Q | RL |
| ANTIMONY | 7440-36-0 | 6000 | ug/l | ND | 1 | | 2 | 0.31 | 1 | B | 2 | 0.17 | 1 | B | 2 | ND | 1 | | 2 | 0.36 | 1 | B | 2 | 0.15 | 1 | B | 2 | 0.16 | 1 | B | 2 |
| ARSENIC | 7440-38-2 | 50000 | ug/l | 0.43 | 1 | B | 1 | 0.55 | 1 | JB | 1 | 0.43 | 1 | JB | 1 | 3.9 | 1 | | 1 | 0.71 | 1 | JB | 1 | 0.57 | 1 | JB | 1 | 0.52 | 1 | JB | 1 |
| BARIUM | 7440-39-3 | 2000000 | ug/l | 15.3 | 1 | | 10 | 34.8 | 1 | | 10 | 11.7 | 1 | | 10 | 177 | 1 | | 10 | 51.5 | 1 | | 10 | 34.5 | 1 | | 10 | 37 | 1 | | 10 |
| BERYLLIUM | 7440-41-7 | 4000 | ug/l | ND | 1 | | 1 | ND | 1 | | 1 | ND | 1 | | 1 | ND | 1 | | 1 | ND | 1 | | 1 | ND | 1 | | 1 | ND | 1 | | 1 |
| CADMIUM | 7440-43-9 | 5000 | ug/l | 0.31 | 1 | JB | 1 | 1.3 | 1 | | 1 | ND | 1 | | 1 | ND | 1 | | 1 | ND | 1 | | 1 | 0.56 | 1 | B | 1 | 0.22 | 1 | B | 1 |
| CHROMIUM | 7440-47-3 | 100000 | ug/l | 3.8 | 1 | J | 2 | 3.6 | 1 | J | 2 | 4.4 | 1 | J | 2 | 3.3 | 1 | J | 2 | 4.6 | 1 | J | 2 | 3 | 1 | J | 2 | 3.9 | 1 | J | 2 |
| COBALT | 7440-48-4 | 2000000 | ug/l | 5.2 | 1 | | 0.5 | 0.69 | 1 | | 0.5 | ND | 1 | | 0.5 | 1.8 | 1 | | 0.5 | 1.5 | 1 | | 0.5 | 6.4 | 1 | | 0.5 | 1.6 | 1 | | 0.5 |
| COPPER | 7440-50-8 | 1000000 | ug/l | 3.5 | 1 | | 2 | 4 | 1 | | 2 | 0.93 | 1 | B | 2 | 0.49 | 1 | B | 2 | 1.4 | 1 | B | 2 | 1.6 | 1 | B | 2 | 1.9 | 1 | B | 2 |
| LEAD | 7439-92-1 | 5000 | ug/l | 0.25 | 1 | B | 1 | 0.46 | 1 | B | 1 | ND | 1 | | 1 | 0.076 | 1 | B | 1 | ND | 1 | | 1 | ND | 1 | | 1 | ND | 1 | | 1 |
| MERCURY | 7439-97-6 | 2000 | ug/l | 0.037 | 1 | JB | 0.2 | 0.025 | 1 | JB | 0.2 | ND | 1 | | 0.2 | 0.034 | 1 | JB | 0.2 | 0.05 | 1 | JB | 0.2 | 0.033 | 1 | JB | 0.2 | 0.023 | 1 | JB | 0.2 |
| NICKEL | 7440-02-0 | 100000 | ug/l | 11.6 | 1 | | 1 | 3.3 | 1 | | 1 | 0.32 | 1 | B | 1 | 1.6 | 1 | | 1 | 1.3 | 1 | | 1 | 14.6 | 1 | | 1 | 2.8 | 1 | | 1 |
| SELENIUM | 7782-49-2 | 50000 | ug/l | ND | 1 | | 5 | 1.6 | 1 | JB | 5 | 2.7 | 1 | JB | 5 | 0.77 | 1 | B | 5 | 2.1 | 1 | JB | 5 | 2 | 1 | JB | 5 | 1.9 | 1 | JB | 5 |
| SILVER | 7440-22-4 | 100000 | ug/l | ND | 1 | | 1 | ND | 1 | | 1 | ND | 1 | | 1 | ND | 1 | | 1 | ND | 1 | | 1 | ND | 1 | | 1 | ND | 1 | | 1 |
| THALLIUM | 7440-28-0 | 2000 | ug/l | 0.2 | 1 | JB | 1 | 0.099 | 1 | B | 1 | ND | 1 | | 1 | 0.036 | 1 | JB | 1 | ND | 1 | | 1 | 0.04 | 1 | B | 1 | 0.049 | 1 | B | 1 |
| TIN | 7440-31-5 | 61000000 | ug/l | 3.3 | 1 | JB | 5 | 8.1 | 1 | J | 5 | 3.9 | 1 | JB | 5 | 4.7 | 1 | JB | 5 | 6.4 | 1 | J | 5 | 5.1 | 1 | J | 5 | 6.4 | 1 | J | 5 |
| VANADIUM (FUME OR DUST) | 7440-62-2 | 720000 | ug/l | ND | 1 | | 1 | 0.1 | 1 | B | 1 | 0.47 | 1 | B | 1 | 0.45 | 1 | B | 1 | ND | 1 | | 1 | 0.58 | 1 | B | 1 | ND | 1 | | 1 |
| ZINC | 7440-66-6 | 2000000 | ug/l | 22.6 | 1 | | 5 | 112 | 1 | | 5 | 6 | 1 | | 5 | 8.1 | 1 | | 5 | 4.2 | 1 | B | 5 | 1720 | 1 | | 5 | 69.4 | 1 | | 5 |

**Table 5**
**Summary of Groundwater Analytical Results - October 2008**
**Comparison to Pennsylvania Non-Residential Non-Use Aquifer Groundwater MSCs**
**U.S. Steel - RCRA Groundwater Sampling**
**Fairless Hills, Pennsylvania**

| | CAS No | PADEP Non-Residentail Non-Use Aquifer GW MSC | Location ID | MW7-4-26 | | | | MW7-5-28 | | | | MW7-9-17 | | | | MW7-9-17 | | | |
|---|---|---|---|---|---|---|---|---|---|---|---|---|---|---|---|---|---|---|---|
| | | | Sample ID | MW7-4-26_10-08-N | | | | MW7-5-28_10-08-N | | | | MW7-9-17_10-08-N | | | | DUP001_10-08-N | | | |
| | | | Sample Date | 10/14/2008 | | | | 10/14/2008 | | | | 10/15/2008 | | | | 10/15/2008 | | | |
| | | | Lab Id | C8J160299006 | | | | C8J160299007 | | | | C8J160299005 | | | | C8J160299011 | | | |
| ***RCRA APPENDIX IX VOLATILE ORGANIC COMPOUNDS (Method 8260)*** | | | | Result | DF | Q | RL | Result | DF | Q | RL | Result | DF | Q | RL | Result | DF | Q | RL |
| 1,1,1,2-TETRACHLOROETHANE | 630-20-6 | 7000 | ug/l | ND | 1 | | 1 | ND | 1 | | 1 | ND | 1 | | 1 | ND | 1 | | 1 |
| 1,1,1-TRICHLOROETHANE | 71-55-6 | 2000 | ug/l | ND | 1 | | 1 | ND | 1 | | 1 | ND | 1 | | 1 | ND | 1 | | 1 |
| 1,1,2,2-TETRACHLOROETHANE | 79-34-5 | 30 | ug/l | ND | 1 | | 1 | ND | 1 | | 1 | ND | 1 | | 1 | ND | 1 | | 1 |
| 1,1,2-TRICHLOROETHANE | 79-00-5 | 50 | ug/l | ND | 1 | | 1 | ND | 1 | | 1 | ND | 1 | | 1 | ND | 1 | | 1 |
| 1,1-DICHLOROETHANE | 75-34-3 | 1100 | ug/l | ND | 1 | | 1 | ND | 1 | | 1 | ND | 1 | | 1 | ND | 1 | | 1 |
| 1,1-DICHLOROETHYLENE | 75-35-4 | 70 | ug/l | ND | 1 | | 1 | ND | 1 | | 1 | ND | 1 | | 1 | ND | 1 | | 1 |
| 1,2,3-TRICHLOROPROPANE | 96-18-4 | 4000 | ug/l | ND | 1 | | 1 | ND | 1 | | 1 | ND | 1 | | 1 | ND | 1 | | 1 |
| 1,2-DIBROMO-3-CHLOROPROPANE (DBCP) | 96-12-8 | 20 | ug/l | ND | 1 | | 1 | ND | 1 | | 1 | ND | 1 | | 1 | ND | 1 | | 1 |
| 1,2-DIBROMOETHANE | 106-93-4 | 5 | ug/l | ND | 1 | | 1 | ND | 1 | | 1 | ND | 1 | | 1 | ND | 1 | | 1 |
| 1,2-DICHLOROETHANE | 107-06-2 | 50 | ug/l | ND | 1 | | 1 | ND | 1 | | 1 | ND | 1 | | 1 | ND | 1 | | 1 |
| 1,2-DICHLOROPROPANE | 78-87-5 | 50 | ug/l | ND | 1 | | 1 | ND | 1 | | 1 | ND | 1 | | 1 | ND | 1 | | 1 |
| 1,4-DIOXANE | 123-91-1 | 240 | ug/l | ND | 1 | | 200 | ND | 1 | | 200 | ND | 1 | | 200 | ND | 1 | | 200 |
| 2-BUTANONE (MEK) | 78-93-3 | 580000 | ug/l | ND | 1 | | 5 | ND | 1 | | 5 | 2.2 | 1 | J | 5 | 2.2 | 1 | J | 5 |
| 2-CHLOR-1,3-BUTADIENE | 126-99-8 | 4100 | ug/l | ND | 1 | | 1 | ND | 1 | | 1 | ND | 1 | | 1 | ND | 1 | | 1 |
| 2-METHYL-1-PROPANOL | 78-83-1 | 610000 | ug/l | ND | 1 | | 40 | ND | 1 | | 40 | ND | 1 | | 40 | ND | 1 | | 40 |
| 4-METHYL-2-PENTANONE (MIBK) | 108-10-1 | 41000 | ug/l | ND | 1 | | 5 | ND | 1 | | 5 | ND | 1 | | 5 | ND | 1 | | 5 |
| ACETONE | 67-64-1 | 100000 | ug/l | ND | 1 | | 5 | ND | 1 | | 5 | 10 | 1 | | 5 | 10 | 1 | | 5 |
| ACETONITRILE | 75-05-8 | 3500 | ug/l | ND | 1 | | 20 | ND | 1 | | 20 | ND | 1 | | 20 | ND | 1 | | 20 |
| ACROLEIN | 107-02-8 | 1.2 | ug/l | ND | 1 | | ***20*** | ND | 1 | | ***20*** | ND | 1 | | ***20*** | ND | 1 | | ***20*** |
| ACRYLONITRILE | 107-13-1 | 270 | ug/l | ND | 1 | | 20 | ND | 1 | | 20 | ND | 1 | | 20 | ND | 1 | | 20 |
| ALLYLCHLORIDE | 107-05-1 | 580 | ug/l | ND | 1 | | 1 | ND | 1 | | 1 | ND | 1 | | 1 | ND | 1 | | 1 |
| BENZENE | 71-43-2 | 500 | ug/l | ND | 1 | | 1 | ND | 1 | | 1 | ND | 1 | | 1 | ND | 1 | | 1 |
| BROMODICHLOROMETHANE | 75-27-4 | 100 | ug/l | ND | 1 | | 1 | ND | 1 | | 1 | ND | 1 | | 1 | ND | 1 | | 1 |
| BROMOMETHANE | 74-83-9 | 1000 | ug/l | ND | 1 | | 1 | ND | 1 | | 1 | ND | 1 | | 1 | ND | 1 | | 1 |
| CARBON DISULFIDE | 75-15-0 | 4100 | ug/l | ND | 1 | | 1 | ND | 1 | | 1 | ND | 1 | | 1 | ND | 1 | | 1 |
| CARBON TETRACHLORIDE | 56-23-5 | 50 | ug/l | ND | 1 | | 1 | ND | 1 | | 1 | ND | 1 | | 1 | ND | 1 | | 1 |
| CFC-11 | 75-69-4 | 200000 | ug/l | ND | 1 | | 1 | ND | 1 | | 1 | ND | 1 | | 1 | ND | 1 | | 1 |
| CFC-12 | 75-71-8 | 100000 | ug/l | ND | 1 | | 1 | ND | 1 | | 1 | ND | 1 | | 1 | ND | 1 | | 1 |
| CHLOROBENZENE | 108-90-7 | 10000 | ug/l | ND | 1 | | 1 | ND | 1 | | 1 | ND | 1 | | 1 | ND | 1 | | 1 |
| CHLORODIBROMOMETHANE | 124-48-1 | 10000 | ug/l | ND | 1 | | 1 | ND | 1 | | 1 | ND | 1 | | 1 | ND | 1 | | 1 |
| CHLOROETHANE | 75-00-3 | 90000 | ug/l | ND | 1 | | 1 | ND | 1 | | 1 | ND | 1 | | 1 | ND | 1 | | 1 |
| CHLOROFORM | 67-66-3 | 1000 | ug/l | ND | 1 | | 1 | ND | 1 | | 1 | ND | 1 | | 1 | ND | 1 | | 1 |
| CHLOROMETHANE | 74-87-3 | 300 | ug/l | ND | 1 | | 1 | ND | 1 | | 1 | ND | 1 | | 1 | ND | 1 | | 1 |
| CIS-1,3-DICHLOROPROPENE | 10061-01-5 | NS | ug/l | ND | 1 | | 1 | ND | 1 | | 1 | ND | 1 | | 1 | ND | 1 | | 1 |
| DIBROMOMETHANE | 74-95-3 | 20000 | ug/l | ND | 1 | | 1 | ND | 1 | | 1 | ND | 1 | | 1 | ND | 1 | | 1 |
| DICHLOROMETHANE | 75-09-2 | 500 | ug/l | ND | 1 | | 1 | ND | 1 | | 1 | ND | 1 | | 1 | ND | | | |
| ETHYL METHACRYLATE | 97-63-2 | 1800 | ug/l | ND | 1 | | 1 | ND | 1 | | 1 | ND | 1 | | 1 | ND | 1 | | 1 |
| ETHYLBENZENE | 100-41-4 | 70000 | ug/l | ND | 1 | | 1 | ND | 1 | | 1 | ND | 1 | | 1 | ND | 1 | | 1 |
| IODOMETHANE | 74-88-4 | 5 | ug/l | ND | 1 | | 1 | ND | 1 | | 1 | 0.29 | 1 | J | 1 | 0.35 | 1 | J | 1 |
| METHYL METHACRYLATE | 80-62-6 | 410000 | ug/l | ND | 1 | | 1 | ND | 1 | | 1 | ND | 1 | | 1 | ND | 1 | | 1 |
| METHYL N-BUTYL KETONE | 591-78-6 | 5 | ug/l | ND | 1 | | 5 | ND | 1 | | 5 | ND | 1 | | 5 | ND | 1 | | 5 |
| METHYLACRYLONITRILE | 126-98-7 | 4.1 | ug/l | ND | 1 | | 1 | ND | 1 | | 1 | ND | 1 | | 1 | ND | 1 | | 1 |
| PENTACHLOROETHANE | 76-01-7 | 5 | ug/l | ND | 1.05 | | 2.1 | ND | 1.04 | | 2.1 | ND | 1.08 | | 2.2 | ND | 1.08 | | 2.2 |
| PROPIONITRILE | 107-12-0 | 5 | ug/l | ND | 1 | | 2 | ND | 1 | | 2 | ND | 1 | | 2 | ND | 1 | | 2 |
| STYRENE (MONOMER) | 100-42-5 | 10000 | ug/l | ND | 1 | | 1 | ND | 1 | | 1 | ND | 1 | | 1 | ND | 1 | | 1 |
| TETRACHLOROETHENE | 127-18-4 | 50 | ug/l | ND | 1 | | 1 | ND | 1 | | 1 | ND | 1 | | 1 | ND | 1 | | 1 |
| TOLUENE | 108-88-3 | 100000 | ug/l | ND | 1 | | 1 | ND | 1 | | 1 | ND | 1 | | 1 | ND | 1 | | 1 |
| TRANS-1,2-DICHLOROETHENE | 156-60-5 | 1000 | ug/l | ND | 1 | | 1 | ND | 1 | | 1 | ND | 1 | | 1 | ND | 1 | | 1 |
| TRANS-1,3-DICHLOROPROPENE | 10061-02-6 | NS | ug/l | ND | 1 | | 1 | ND | 1 | | 1 | ND | 1 | | 1 | ND | 1 | | 1 |
| TRANS-1,4-DICHLOROBUTENE | 110-57-6 | 5 | ug/l | ND | 1 | | 1 | ND | 1 | | 1 | 0.23 | 1 | J | 1 | ND | 1 | | 1 |
| TRIBROMOMETHANE | 75-25-2 | 10000 | ug/l | ND | 1 | | 1 | ND | 1 | | 1 | ND | 1 | | 1 | ND | 1 | | 1 |
| TRICHLOROETHYLENE | 79-01-6 | 50 | ug/l | ND | 1 | | 1 | ND | 1 | | 1 | ND | 1 | | 1 | ND | 1 | | 1 |
| VINYL ACETATE | 108-05-4 | 1200 | ug/l | ND | 1 | | 1 | ND | 1 | | 1 | ND | 1 | | 1 | ND | 1 | | 1 |
| VINYL CHLORIDE | 75-01-4 | 20 | ug/l | ND | 1 | | 1 | ND | 1 | | 1 | 0.35 | 1 | J | 1 | 0.35 | 1 | J | 1 |
| XYLENE (TOTAL) | 1330-20-7 | 180000 | ug/l | ND | 1 | | 3 | ND | 1 | | 3 | ND | 1 | | 3 | ND | 1 | | 3 |

**Table 5**
**Summary of Groundwater Analytical Results - October 2008**
**Comparison to Pennsylvania Non-Residential Non-Use Aquifer Groundwater MSCs**
**U.S. Steel - RCRA Groundwater Sampling**
**Fairless Hills, Pennsylvania**

| | CAS No | PADEP Non-Residentail Non-Use Aquifer GW MSC | Location ID<br>Sample ID<br>Sample Date<br>Lab Id | MW7-4-26<br>MW7-4-26_10-08-N<br>10/14/2008<br>C8J160299006 | | | | MW7-5-28<br>MW7-5-28_10-08-N<br>10/14/2008<br>C8J160299007 | | | | MW7-9-17<br>MW7-9-17_10-08-N<br>10/15/2008<br>C8J160299005 | | | | MW7-9-17<br>DUP001_10-08-N<br>10/15/2008<br>C8J160299011 | | | |
|---|---|---|---|---|---|---|---|---|---|---|---|---|---|---|---|---|---|---|---|
| ***RCRA APPENDIX IX SEMI-VOLATILE ORGANIC COMPOUNDS (Method 8270)*** | | | | Result | DF | Q | RL | Result | DF | Q | RL | Result | DF | Q | RL | Result | DF | Q | RL |
| 1,2,4,5-TETRACHLOROBENZENE | 95-94-3 | 580 | ug/l | ND | 1.05 | | 1 | ND | 1.04 | | 1 | ND | 1.08 | | 1.1 | ND | 1.08 | | 1.1 |
| 1,2,4-TRICHLOROBENZENE | 120-82-1 | 44000 | ug/l | ND | 1.05 | | 0.21 | ND | 1.04 | | 0.21 | ND | 1.08 | | 0.22 | ND | 1.08 | | 0.22 |
| 1,2-DICHLOROBENZENE | 95-50-1 | 60000 | ug/l | ND | 1.05 | | 0.21 | ND | 1.04 | | 0.21 | ND | 1.08 | | 0.22 | ND | 1.08 | | 0.22 |
| 1,3,5-TRINITROBENZENE | 99-35-4 | NS | ug/l | ND | 1.05 | | 1 | ND | 1.04 | | 1 | ND | 1.08 | | 1.1 | ND | 1.08 | | 1.1 |
| 1,4-DICHLOROBENZENE | 106-46-7 | 7500 | ug/l | ND | 1.05 | | 0.21 | ND | 1.04 | | 0.21 | ND | 1.08 | | 0.22 | ND | 1.08 | | 0.22 |
| 1,4-NAPHTHOQUINONE | 130-15-4 | 5 | ug/l | ND | 1.05 | | 1 | ND | 1.04 | | 1 | ND | 1.08 | | 1.1 | ND | 1.08 | | 1.1 |
| 1-NAPHTHYLAMINE | 134-32-7 | 1400 | ug/l | ND | 1.05 | | 1 | ND | 1.04 | | 1 | ND | 1.08 | | 1.1 | ND | 1.08 | | 1.1 |
| 2,4,5-TRICHLOROPHENOL | 95-95-4 | 1000000 | ug/l | ND | 1.05 | | 1 | ND | 1.04 | | 1 | ND | 1.08 | | 1.1 | ND | 1.08 | | 1.1 |
| 2,4,6-TRICHLOROPHENOL | 88-06-2 | 31000 | ug/l | ND | 1.05 | | 1 | ND | 1.04 | | 1 | ND | 1.08 | | 1.1 | ND | 1.08 | | 1.1 |
| 2,4-DICHLOROPHENOL | 120-83-2 | 20000 | ug/l | ND | 1.05 | | 0.21 | ND | 1.04 | | 0.21 | ND | 1.08 | | 0.22 | ND | 1.08 | | 0.22 |
| 2,4-DIMETHYLPHENOL | 105-67-9 | 2000000 | ug/l | ND | 1.05 | | 1 | ND | 1.04 | | 1 | ND | 1.08 | | 1.1 | ND | 1.08 | | 1.1 |
| 2,4-DINITROPHENOL | 51-28-5 | 410 | ug/l | ND | 1.05 | | 5.2 | ND | 1.04 | | 5.2 | ND | 1.08 | | 5.4 | ND | 1.08 | | 5.4 |
| 2,4-DINITROTOLUENE | 121-14-2 | 8400 | ug/l | ND | 1.05 | | 1 | ND | 1.04 | | 1 | ND | 1.08 | | 1.1 | ND | 1.08 | | 1.1 |
| 2,6-DICHLOROPHENOL | 87-65-0 | NS | ug/l | ND | 1.05 | | 0.21 | ND | 1.04 | | 0.21 | ND | 1.08 | | 0.22 | ND | 1.08 | | 0.22 |
| 2,6-DINITROTOLUENE | 606-20-2 | 100000 | ug/l | ND | 1.05 | | 1 | ND | 1.04 | | 1 | ND | 1.08 | | 1.1 | ND | 1.08 | | 1.1 |
| 2-ACETYLAMINOFLUORENE | 53-96-3 | 680 | ug/l | ND | 1.05 | | 1 | ND | 1.04 | | 1 | ND | 1.08 | | 1.1 | ND | 1.08 | | 1.1 |
| 2-CHLORONAPHTHALENE | 91-58-7 | 8200 | ug/l | ND | 1.05 | | 0.21 | ND | 1.04 | | 0.21 | ND | 1.08 | | 0.22 | ND | 1.08 | | 0.22 |
| 2-CHLOROPHENOL | 95-57-8 | 40 | ug/l | ND | 1.05 | | 1 | ND | 1.04 | | 1 | ND | 1.08 | | 1.1 | ND | 1.08 | | 1.1 |
| 2-METHYL PYRIDINE (2-PICOLINE) | 109-06-8 | 5 | ug/l | ND | 1.05 | | 1 | ND | 1.04 | | 1 | ND | 1.08 | | 1.1 | ND | 1.08 | | 1.1 |
| 2-METHYLNAPHTHALENE | 91-57-6 | 2000 | ug/l | ND | 1.05 | | 0.21 | ND | 1.04 | | 0.21 | ND | 1.08 | | 0.22 | ND | 1.08 | | 0.22 |
| 2-METHYLPHENOL | 95-48-7 | 510000 | ug/l | ND | 1.05 | | 1 | ND | 1.04 | | 1 | ND | 1.08 | | 1.1 | ND | 1.08 | | 1.1 |
| 2-NAPHTHALENAMINE (2-NAPHTHYLAMINE) | 91-59-8 | 1400 | ug/l | ND | 1.05 | | 1 | ND | 1.04 | | 1 | ND | 1.08 | | 1.1 | ND | 1.08 | | 1.1 |
| 2-NITROANILINE | 88-74-4 | 5.8 | ug/l | ND | 1.05 | | 5.2 | ND | 1.04 | | 5.2 | ND | 1.08 | | 5.4 | ND | 1.08 | | 5.4 |
| 2-NITROPHENOL | 88-75-5 | 820000 | ug/l | ND | 1.05 | | 1 | ND | 1.04 | | 1 | ND | 1.08 | | 1.1 | ND | 1.08 | | 1.1 |
| 3,3'-DICHLOROBENZIDINE | 91-94-1 | 3100 | ug/l | ND | 1.05 | | 1 | ND | 1.04 | | 1 | ND | 1.08 | | 1.1 | ND | 1.08 | | 1.1 |
| 3,3'-DIMETHYLBENZIDINE | 119-93-7 | 280 | ug/l | ND | 1.05 | | 10 | ND | 1.04 | | 10 | ND | 1.08 | | 11 | ND | 1.08 | | 11 |
| 3,5,5-TRIMETHYL-2-CYCLOHEXENE-1-ONE | 78-59-1 | 100000 | ug/l | ND | 1.05 | | 1 | ND | 1.04 | | 1 | ND | 1.08 | | 1.1 | ND | 1.08 | | 1.1 |
| 3-METHYLCHLORANTHRENE | 56-49-5 | NS | ug/l | ND | 1.05 | | 1 | ND | 1.04 | | 1 | ND | 1.08 | | 1.1 | ND | 1.08 | | 1.1 |
| 3-Methylphenol & 4-Methylphenol | 65794-96-9 | NS | ug/l | ND | 1.05 | | 1 | ND | 1.04 | | 1 | ND | 1.08 | | 1.1 | ND | 1.08 | | 1.1 |
| 3-NITROANILINE | 99-09-2 | 5.8 | ug/l | ND | 1.05 | | 5.2 | ND | 1.04 | | 5.2 | ND | 1.08 | | 5.4 | ND | 1.08 | | 5.4 |
| 4,6-DINITRO-2-METHYLPHENOL | 534-52-1 | 5 | ug/l | ND | 1.05 | | ***5.2*** | ND | 1.04 | | ***5.2*** | ND | 1.08 | | ***5.4*** | ND | 1.08 | | ***5.4*** |
| 4-AMINOBIPHENYL | 92-67-1 | 120 | ug/l | ND | 1.05 | | 1 | ND | 1.04 | | 1 | ND | 1.08 | | 1.1 | ND | 1.08 | | 1.1 |
| 4-BROMOPHENYL PHENYL ETHER | 101-55-3 | 5 | ug/l | ND | 1.05 | | 1 | ND | 1.04 | | 1 | ND | 1.08 | | 1.1 | ND | 1.08 | | 1.1 |
| 4-CHLORO-3-METHYLPHENOL | 59-50-7 | 510 | ug/l | ND | 1.05 | | 1 | ND | 1.04 | | 1 | ND | 1.08 | | 1.1 | ND | 1.08 | | 1.1 |
| 4-CHLOROPHENYL PHENYL ETHER | 7005-72-3 | 5 | ug/l | ND | 1.05 | | 1 | ND | 1.04 | | 1 | ND | 1.08 | | 1.1 | ND | 1.08 | | 1.1 |
| 4-DIMETHYLAMINOAZOBENZENE | 60-11-7 | 570 | ug/l | ND | 1.05 | | 1 | ND | 1.04 | | 1 | ND | 1.08 | | 1.1 | ND | 1.08 | | 1.1 |
| 4-NITROPHENOL | 100-02-7 | 60000 | ug/l | ND | 1.05 | | 5.2 | ND | 1.04 | | 5.2 | ND | 1.08 | | 5.4 | ND | 1.08 | | 5.4 |
| 4-NITROQUINOLINE-N-OXIDE | 56-57-5 | 5 | ug/l | ND | 1.05 | | ***10*** | ND | 1.04 | | ***10*** | ND | 1.08 | | ***11*** | ND | 1.08 | | ***11*** |
| 5-NITRO-O-TOLUIDINE | 99-55-8 | NS | ug/l | ND | 1.05 | | 10 | ND | 1.04 | | 10 | ND | 1.08 | | 11 | ND | 1.08 | | 11 |
| 7,12-DIMETHYLBENZ(A)ANTHRACENE | 57-97-6 | NS | ug/l | ND | 1.05 | | 1 | ND | 1.04 | | 1 | ND | 1.08 | | 1.1 | ND | 1.08 | | 1.1 |
| a,a-Dimethylphenethylamine | 122-09-8 | 5 | ug/l | ND | 1.05 | | 1 | ND | 1.04 | | 1 | 0.54 | 1.08 | J | 1.1 | ND | 1.08 | | 1.1 |
| ACENAPHTHENE | 83-32-9 | 3800 | ug/l | ND | 1.05 | | 0.21 | ND | 1.04 | | 0.21 | ND | 1.08 | | 0.22 | ND | 1.08 | | 0.22 |
| ACENAPHTHYLENE | 208-96-8 | 16000 | ug/l | ND | 1.05 | | 0.21 | ND | 1.04 | | 0.21 | ND | 1.08 | | 0.22 | ND | 1.08 | | 0.22 |
| ACETOPHENONE | 98-86-2 | 10000 | ug/l | ND | 1.05 | | 1 | ND | 1.04 | | 1 | ND | 1.08 | | 1.1 | ND | 1.08 | | 1.1 |
| ANILINE | 62-53-3 | 5.8 | ug/l | ND | 1.05 | | 1 | ND | 1.04 | | 1 | ND | 1.08 | | 1.1 | ND | 1.08 | | 1.1 |
| ANTHRACENE | 120-12-7 | 66 | ug/l | ND | 1.05 | | 0.21 | ND | 1.04 | | 0.21 | ND | 1.08 | | 0.22 | ND | 1.08 | | 0.22 |
| ARAMITE | 140-57-8 | NS | ug/l | ND | 1.05 | | 1 | ND | 1.04 | | 1 | ND | 1.08 | | 1.1 | ND | 1.08 | | 1.1 |
| BENZO(A)ANTHRACENE | 56-55-3 | 11 | ug/l | ND | 1.05 | | 0.21 | ND | 1.04 | | 0.21 | ND | 1.08 | | 0.22 | ND | 1.08 | | 0.22 |
| BENZO(A)PYRENE | 50-32-8 | 3.8 | ug/l | ND | 1.05 | | 0.21 | ND | 1.04 | | 0.21 | ND | 1.08 | | 0.22 | ND | 1.08 | | 0.22 |
| BENZO(B)FLUORANTHENE | 205-99-2 | 1.2 | ug/l | ND | 1.05 | | 0.21 | ND | 1.04 | | 0.21 | ND | 1.08 | | 0.22 | ND | 1.08 | | 0.22 |
| BENZO(GHI)PERYLENE | 191-24-2 | 0.26 | ug/l | ND | 1.05 | | 0.21 | ND | 1.04 | | 0.21 | ND | 1.08 | | 0.22 | ND | 1.08 | | 0.22 |
| BENZO(K)FLUORANTHENE | 207-08-9 | 0.55 | ug/l | ND | 1.05 | | 0.21 | ND | 1.04 | | 0.21 | ND | 1.08 | | 0.22 | ND | 1.08 | | 0.22 |
| BENZYL ALCOHOL | 100-51-6 | 31000 | ug/l | ND | 1.05 | | 1 | ND | 1.04 | | 1 | ND | 1.08 | | 1.1 | ND | 1.08 | | 1.1 |
| BENZYL BUTYL PHTHALATE | 85-68-7 | 2700 | ug/l | 0.2 | 1.05 | J | 1 | 0.22 | 1.04 | J | 1 | 0.15 | 1.08 | J | 1.1 | 0.19 | 1.08 | J | 1.1 |
| BIS(2-CHLORO-1-METHYLETHYL) ETHER | 108-60-1 | 30000 | ug/l | ND | 1.05 | | 0.21 | ND | 1.04 | | 0.21 | ND | 1.08 | | 0.22 | ND | 1.08 | | 0.22 |
| BIS(2-CHLOROETHOXY)METHANE | 111-91-1 | 5 | ug/l | ND | 1.05 | | 1 | ND | 1.04 | | 1 | ND | 1.08 | | 1.1 | ND | 1.08 | | 1.1 |
| BIS(2-CHLOROETHYL) ETHER | 111-44-4 | 55 | ug/l | ND | 1.05 | | 0.21 | ND | 1.04 | | 0.21 | ND | 1.08 | | 0.22 | ND | 1.08 | | 0.22 |
| BIS(2-ETHYLHEXYL)PHTHALATE | 117-81-7 | 290 | ug/l | 2.2 | 1.05 | | 1 | 0.46 | 1.04 | J | 1 | 0.85 | 1.08 | J | 1.1 | 1.2 | 1.08 | | 1.1 |
| CHLORDECONE (KEPONE) | 143-50-0 | 160 | ug/l | ND | 1.05 | | 4.2 | ND | 1.04 | | 4.2 | ND | 1.08 | | 4.3 | ND | 1.08 | | 4.3 |

**Table 5**
**Summary of Groundwater Analytical Results - October 2008**
**Comparison to Pennsylvania Non-Residential Non-Use Aquifer Groundwater MSCs**
**U.S. Steel - RCRA Groundwater Sampling**
**Fairless Hills, Pennsylvania**

| | CAS No | PADEP Non-Residentail Non-Use Aquifer GW MSC | Location ID | MW7-4-26 | | | | MW7-5-28 | | | | MW7-9-17 | | | | MW7-9-17 | | | |
|---|---|---|---|---|---|---|---|---|---|---|---|---|---|---|---|---|---|---|---|
| | | | Sample ID | MW7-4-26_10-08-N | | | | MW7-5-28_10-08-N | | | | MW7-9-17_10-08-N | | | | DUP001_10-08-N | | | |
| | | | Sample Date | 10/14/2008 | | | | 10/14/2008 | | | | 10/15/2008 | | | | 10/15/2008 | | | |
| | | | Lab Id | C8J160299006 | | | | C8J160299007 | | | | C8J160299005 | | | | C8J160299011 | | | |
| ***RCRA APPENDIX IX SEMI-VOLATILE ORGANIC COMPOUNDS (Method 8270)*** | | | | Result | DF | Q | RL | Result | DF | Q | RL | Result | DF | Q | RL | Result | DF | Q | RL |
| CHLOROBENZILATE | 510-15-6 | 9600 | ug/l | ND | 1.05 | | 1 | ND | 1.04 | | 1 | ND | 1.08 | | 1.1 | ND | 1.08 | | 1.1 |
| CHLOROPHENOLS | 58-90-2 | 61000 | ug/l | ND | 1.05 | | 1 | ND | 1.04 | | 1 | ND | 1.08 | | 1.1 | ND | 1.08 | | 1.1 |
| CHRYSENE | 218-01-9 | 1.9 | ug/l | ND | 1.05 | | 0.21 | ND | 1.04 | | 0.21 | ND | 1.08 | | 0.22 | ND | 1.08 | | 0.22 |
| CYGON | 60-51-5 | 20000 | ug/l | ND | 1.05 | | 1 | ND | 1.04 | | 1 | ND | 1.08 | | 1.1 | ND | 1.08 | | 1.1 |
| DIALLATE | 2303-16-4 | 1000 | ug/l | ND | 1.05 | | 1 | ND | 1.04 | | 1 | ND | 1.08 | | 1.1 | ND | 1.08 | | 1.1 |
| DIBENZO(A,H)ANTHRACENE | 53-70-3 | 0.6 | ug/l | ND | 1.05 | | 0.21 | ND | 1.04 | | 0.21 | ND | 1.08 | | 0.22 | ND | 1.08 | | 0.22 |
| DIBENZOFURAN | 132-64-9 | 5 | ug/l | ND | 1.05 | | 1 | 0.058 | 1.04 | J | 1 | ND | 1.08 | | 1.1 | ND | 1.08 | | 1.1 |
| DIETHYL PHTHALATE | 84-66-2 | 1100000 | ug/l | ND | 1.05 | | 1 | ND | 1.04 | | 1 | ND | 1.08 | | 1.1 | ND | 1.08 | | 1.1 |
| DIMETHYL PHTHALATE | 131-11-3 | 5 | ug/l | ND | 1.05 | | 1 | ND | 1.04 | | 1 | ND | 1.08 | | 1.1 | ND | 1.08 | | 1.1 |
| DI-N-BUTYL PHTHALATE | 84-74-2 | 400000 | ug/l | 0.12 | 1.05 | JB | 1 | 0.065 | 1.04 | J | 1 | 0.11 | 1.08 | JB | 1.1 | 0.1 | 1.08 | JB | 1.1 |
| DINITROBUTYL PHENOL | 88-85-7 | 700 | ug/l | ND | 1.05 | | 1 | ND | 1.04 | | 1 | ND | 1.08 | | 1.1 | ND | 1.08 | | 1.1 |
| DI-N-OCTYL PHTHALATE | 117-84-0 | 3000 | ug/l | ND | 1.05 | | 1 | 0.45 | 1.04 | J | 1 | ND | 1.08 | | 1.1 | ND | 1.08 | | 1.1 |
| DISULFOTON | 298-04-4 | 30 | ug/l | ND | 1.05 | | 1 | ND | 1.04 | | 1 | ND | 1.08 | | 1.1 | ND | 1.08 | | 1.1 |
| ETHYL METHANESULFONATE | 62-50-0 | 5 | ug/l | ND | 1.05 | | 1 | ND | 1.04 | | 1 | ND | 1.08 | | 1.1 | ND | 1.08 | | 1.1 |
| ETHYL PARATHION (PARATHION) | 56-38-2 | 610 | ug/l | ND | 1.05 | | 1 | ND | 1.04 | | 1 | ND | 1.08 | | 1.1 | ND | 1.08 | | 1.1 |
| FAMPHUR | 52-85-7 | 5 | ug/l | ND | 1.05 | | ***10*** | ND | 1.04 | | ***10*** | ND | 1.08 | | ***11*** | ND | 1.08 | | ***11*** |
| FLUORANTHENE | 206-44-0 | 260 | ug/l | 0.44 | 1.05 | | 0.21 | ND | 1.04 | | 0.21 | 0.4 | 1.08 | | 0.22 | ND | 1.08 | | 0.22 |
| FLUORENE | 86-73-7 | 1900 | ug/l | ND | 1.05 | | 0.21 | 0.057 | 1.04 | J | 0.21 | ND | 1.08 | | 0.22 | ND | 1.08 | | 0.22 |
| HEXACHLORO-1,3-BUTADIENE | 87-68-3 | 1000 | ug/l | ND | 1.05 | | 0.21 | ND | 1.04 | | 0.21 | ND | 1.08 | | 0.22 | ND | 1.08 | | 0.22 |
| HEXACHLOROBENZENE | 118-74-1 | 6 | ug/l | ND | 1.05 | | 0.21 | ND | 1.04 | | 0.21 | ND | 1.08 | | 0.22 | ND | 1.08 | | 0.22 |
| HEXACHLOROCYCLOPENTADIENE | 77-47-4 | 1800 | ug/l | ND | 1.05 | | 1 | ND | 1.04 | | 1 | ND | 1.08 | | 1.1 | ND | 1.08 | | 1.1 |
| HEXACHLOROETHANE | 67-72-1 | 100 | ug/l | ND | 1.05 | | 1 | ND | 1.04 | | 1 | ND | 1.08 | | 1.1 | ND | 1.08 | | 1.1 |
| HEXACHLOROPHENE (HCP) | 70-30-4 | NS | ug/l | ND | - | | 0 | ND | - | | 0 | ND | - | | 0 | ND | - | | 0 |
| HEXACHLOROPROPENE | 1888-71-7 | 5 | ug/l | ND | 1.05 | | 1 | ND | 1.04 | | 1 | ND | 1.08 | | 1.1 | ND | 1.08 | | 1.1 |
| INDENO(1,2,3-CD)PYRENE | 193-39-5 | 62 | ug/l | ND | 1.05 | | 0.21 | ND | 1.04 | | 0.21 | ND | 1.08 | | 0.22 | ND | 1.08 | | 0.22 |
| ISODRIN | 465-73-6 | 5 | ug/l | ND | 1.05 | | 1 | ND | 1.04 | | 1 | ND | 1.08 | | 1.1 | ND | 1.08 | | 1.1 |
| ISOSAFROLE | 120-58-1 | 5 | ug/l | ND | 1.05 | | 1 | ND | 1.04 | | 1 | ND | 1.08 | | 1.1 | ND | 1.08 | | 1.1 |
| M-DICHLOROBENZENE | 541-73-1 | 60000 | ug/l | ND | 1.05 | | 0.21 | ND | 1.04 | | 0.21 | ND | 1.08 | | 0.22 | ND | 1.08 | | 0.22 |
| M-DINITROBENZENE | 99-65-0 | 1000 | ug/l | ND | 1.05 | | 1 | ND | 1.04 | | 1 | ND | 1.08 | | 1.1 | ND | 1.08 | | 1.1 |
| METHANAMINE, N-METHYL-N-NITROSO | 62-75-9 | 0.13 | ug/l | ND | 1.05 | | ***1*** | ND | 1.04 | | ***1*** | ND | 1.08 | | ***1.1*** | ND | 1.08 | | ***1.1*** |
| METHAPYRILENE | 91-80-5 | NS | ug/l | ND | 1.05 | | 1 | ND | 1.04 | | 1 | ND | 1.08 | | 1.1 | ND | 1.08 | | 1.1 |
| METHYL METHANESULFONATE | 66-27-3 | 26 | ug/l | ND | 1.05 | | 1 | ND | 1.04 | | 1 | ND | 1.08 | | 1.1 | ND | 1.08 | | 1.1 |
| METHYL PARATHION | 298-00-0 | 200 | ug/l | ND | 1.05 | | 1 | ND | 1.04 | | 1 | ND | 1.08 | | 1.1 | ND | 1.08 | | 1.1 |
| NAPHTHALENE | 91-20-3 | 30000 | ug/l | ND | 1.05 | | 0.21 | 0.053 | 1.04 | J | 0.21 | 0.053 | 1.08 | J | 0.22 | ND | 1.08 | | 0.22 |
| NITROBENZENE | 98-95-3 | 51000 | ug/l | ND | 1.05 | | 0.21 | ND | 1.04 | | 0.21 | ND | 1.08 | | 0.22 | ND | 1.08 | | 0.22 |
| N-NITROSODIETHYLAMINE | 55-18-5 | 0.043 | ug/l | ND | 1.05 | | ***1*** | ND | 1.04 | | ***1*** | ND | 1.08 | | ***1.1*** | ND | 1.08 | | ***1.1*** |
| N-NITROSODI-N-BUTYLAMINE | 924-16-3 | 11 | ug/l | ND | 1.05 | | 1 | ND | 1.04 | | 1 | ND | 1.08 | | 1.1 | ND | 1.08 | | 1.1 |
| N-NITROSODI-N-PROPYLAMINE | 621-64-7 | 370 | ug/l | ND | 1.05 | | 0.21 | ND | 1.04 | | 0.21 | ND | 1.08 | | 0.22 | ND | 1.08 | | 0.22 |
| N-NITROSODIPHENYLAMINE | 86-30-6 | 35000 | ug/l | ND | 1.05 | | 0.21 | ND | 1.04 | | 0.21 | ND | 1.08 | | 0.22 | ND | 1.08 | | 0.22 |
| N-NITROSOMETHYLETHYLAMINE | 10595-95-6 | NS | ug/l | ND | 1.05 | | 1 | ND | 1.04 | | 1 | ND | 1.08 | | 1.1 | ND | 1.08 | | 1.1 |
| N-NITROSOMORPHOLINE | 59-89-2 | NS | ug/l | ND | 1.05 | | 1 | ND | 1.04 | | 1 | ND | 1.08 | | 1.1 | ND | 1.08 | | 1.1 |
| N-NITROSOPIPERIDINE | 100-75-4 | NS | ug/l | ND | 1.05 | | 1 | ND | 1.04 | | 1 | ND | 1.08 | | 1.1 | ND | 1.08 | | 1.1 |
| N-NITROSOPYRROLIDINE | 930-55-2 | NS | ug/l | ND | 1.05 | | 1 | ND | 1.04 | | 1 | ND | 1.08 | | 1.1 | ND | 1.08 | | 1.1 |
| O,O,O-TRIETHYL PHOSPHOROTHIOATE | 126-68-1 | 5 | ug/l | ND | 1.05 | | 1 | ND | 1.04 | | 1 | ND | 1.08 | | 1.1 | ND | 1.08 | | 1.1 |
| O,O-DIETHYL O-PYRAZINYL PHOSPHOROTHIOATE | 297-97-2 | 5 | ug/l | ND | 1.05 | | 1 | ND | 1.04 | | 1 | ND | 1.08 | | 1.1 | ND | 1.08 | | 1.1 |
| O-TOLUIDINE | 95-53-4 | 11000 | ug/l | ND | 1.05 | | 1 | ND | 1.04 | | 1 | ND | 1.08 | | 1.1 | ND | 1.08 | | 1.1 |
| P-CHLOROANILINE | 106-47-8 | 410 | ug/l | ND | 1.05 | | 1 | ND | 1.04 | | 1 | ND | 1.08 | | 1.1 | ND | 1.08 | | 1.1 |
| PENTACHLOROBENZENE | 608-93-5 | 740 | ug/l | ND | 1.05 | | 1 | ND | 1.04 | | 1 | ND | 1.08 | | 1.1 | ND | 1.08 | | 1.1 |
| PENTACHLORONITROBENZENE | 82-68-8 | 440 | ug/l | ND | 1.05 | | 1 | ND | 1.04 | | 1 | ND | 1.08 | | 1.1 | ND | 1.08 | | 1.1 |
| PENTACHLOROPHENOL | 87-86-5 | 1000 | ug/l | ND | 1.05 | | 1 | ND | 1.04 | | 1 | ND | 1.08 | | 1.1 | ND | 1.08 | | 1.1 |
| PHENACETIN | 62-44-2 | 760000 | ug/l | ND | 1.05 | | 1 | ND | 1.04 | | 1 | ND | 1.08 | | 1.1 | ND | 1.08 | | 1.1 |
| PHENANTHRENE | 85-01-8 | 1100 | ug/l | 0.17 | 1.05 | JB | 0.21 | 0.11 | 1.04 | JB | 0.21 | 0.16 | 1.08 | JB | 0.22 | 0.15 | 1.08 | JB | 0.22 |
| PHENOL | 108-95-2 | 400000 | ug/l | ND | 1.05 | | 0.21 | 0.057 | 1.04 | J | 0.21 | 0.041 | 1.08 | J | 0.22 | ND | 1.08 | | 0.22 |
| PHORATE | 298-02-2 | 4.1 | ug/l | ND | 1.05 | | 1 | ND | 1.04 | | 1 | ND | 1.08 | | 1.1 | ND | 1.08 | | 1.1 |
| P-NITROANILINE | 100-01-6 | 5.8 | ug/l | ND | 1.05 | | 5.2 | ND | 1.04 | | 5.2 | ND | 1.08 | | 5.4 | ND | 1.08 | | 5.4 |
| P-PHENYLENEDIAMINE | 106-50-3 | NS | ug/l | ND | 1.05 | | 42 | ND | 1.04 | | 42 | ND | 1.08 | | 43 | ND | 1.08 | | 43 |
| PROPYZAMIDE | 23950-58-5 | 50 | ug/l | ND | 1.05 | | 1 | ND | 1.04 | | 1 | ND | 1.08 | | 1.1 | ND | 1.08 | | 1.1 |
| PYRENE | 129-00-0 | 130 | ug/l | 0.074 | 1.05 | J | 0.21 | ND | 1.04 | | 0.21 | ND | 1.08 | | 0.22 | ND | 1.08 | | 0.22 |
| PYRIDINE | 110-86-1 | 200 | ug/l | ND | 1.05 | | 1 | ND | 1.04 | | 1 | ND | 1.08 | | 1.1 | ND | 1.08 | | 1.1 |
| SAFROLE | 94-59-7 | NS | ug/l | ND | 1.05 | | 1 | ND | 1.04 | | 1 | ND | 1.08 | | 1.1 | ND | 1.08 | | 1.1 |
| SULFOTEP | 3689-24-5 | 10 | ug/l | ND | 1.05 | | 1 | ND | 1.04 | | 1 | ND | 1.08 | | 1.1 | ND | 1.08 | | 1.1 |
| ***RCRA APPENDIX IX METALS - Dissolved (Method 6010/7471)*** | | | | Result | DF | Q | RL | Result | DF | Q | RL | Result | DF | Q | RL | Result | DF | Q | RL |
| ANTIMONY | 7440-36-0 | 6000 | ug/l | 0.16 | 1 | B | 2 | 0.13 | 1 | B | 2 | 0.18 | 1 | B | 2 | 0.14 | 1 | B | 2 |
| ARSENIC | 7440-38-2 | 50000 | ug/l | 0.92 | 1 | JB | 1 | 0.35 | 1 | JB | 1 | 0.72 | 1 | JB | 1 | 0.77 | 1 | JB | 1 |
| BARIUM | 7440-39-3 | 2000000 | ug/l | 49.4 | 1 | | 10 | 60.7 | 1 | | 10 | 14.7 | 1 | | 10 | 24.3 | 1 | | 10 |
| BERYLLIUM | 7440-41-7 | 4000 | ug/l | ND | 1 | | 1 | ND | 1 | | 1 | ND | 1 | | 1 | ND | 1 | | 1 |
| CADMIUM | 7440-43-9 | 5000 | ug/l | 0.12 | 1 | B | 1 | 0.14 | 1 | B | 1 | 0.14 | 1 | B | 1 | 0.15 | 1 | B | 1 |
| CHROMIUM | 7440-47-3 | 100000 | ug/l | 3.8 | 1 | J | 2 | 5.1 | 1 | J | 2 | 3.6 | 1 | J | 2 | 3.2 | 1 | J | 2 |
| COBALT | 7440-48-4 | 2000000 | ug/l | 0.29 | 1 | B | 0.5 | 0.74 | 1 | | 0.5 | 0.75 | 1 | | 0.5 | 1.1 | 1 | | 0.5 |
| COPPER | 7440-50-8 | 1000000 | ug/l | 1.9 | 1 | B | 2 | 1.4 | 1 | B | 2 | 3.5 | 1 | | 2 | 2.2 | 1 | | 2 |
| LEAD | 7439-92-1 | 5000 | ug/l | 0.24 | 1 | B | 1 | ND | 1 | | 1 | 0.24 | 1 | B | 1 | ND | 1 | | 1 |
| MERCURY | 7439-97-6 | 2000 | ug/l | 0.039 | 1 | JB | 0.2 | 0.03 | 1 | JB | 0.2 | 0.029 | 1 | JB | 0.2 | 0.041 | 1 | JB | 0.2 |
| NICKEL | 7440-02-0 | 100000 | ug/l | 1.2 | 1 | | 1 | 2.9 | 1 | | 1 | 2.8 | 1 | | 1 | 2.4 | 1 | | 1 |
| SELENIUM | 7782-49-2 | 50000 | ug/l | 2.4 | 1 | JB | 5 | 1.8 | 1 | JB | 5 | 2.2 | 1 | JB | 5 | 2.4 | 1 | JB | 5 |
| SILVER | 7440-22-4 | 100000 | ug/l | ND | 1 | | 1 | ND | 1 | | 1 | ND | 1 | | 1 | ND | 1 | | 1 |
| THALLIUM | 7440-28-0 | 2000 | ug/l | 0.021 | 1 | B | 1 | 0.031 | 1 | B | 1 | ND | 1 | | 1 | ND | 1 | | 1 |
| TIN | 7440-31-5 | 61000000 | ug/l | 3.9 | 1 | JB | 5 | 4.8 | 1 | JB | 5 | 6 | 1 | J | 5 | 3.4 | 1 | JB | 5 |
| VANADIUM (FUME OR DUST) | 7440-62-2 | 720000 | ug/l | ND | 1 | | 1 | ND | 1 | | 1 | ND | 1 | | 1 | 0.12 | 1 | B | 1 |
| ZINC | 7440-66-6 | 2000000 | ug/l | 9.5 | 1 | | 5 | 4.7 | 1 | B | 5 | 10.3 | 1 | | 5 | 9.2 | 1 | | 5 |

**Table 5**
**Summary of Groundwater Analytical Results - October 2008**
**Comparison to Pennsyvania Non-Residential Non-Use Aquifer Groundwater MSCs**
**U.S. Steel - RCRA Groundwater Sampling**
**Fairless Hills, Pennsylvania**

| | CAS No | PADEP Non-Residentail Non-Use Aquifer GW MSC | Location ID<br>Sample ID<br>Sample Date<br>Lab Id | FB001_10-08<br>FB<br>10/14/2008<br>C8J160299012 | | | | FB002_10-08<br>FB<br>10/15/2008<br>C8J160299009 | | | | FB03_10-08<br>FB<br>10/16/2008<br>C8J180168010 | | | | FB04_10-08<br>FB<br>10/17/2008<br>C8J180168031 | | | | FB-05_10-08<br>C8J220361011<br>10/20/2008<br>C8J220361011 | | | | TB-01_10-08<br>TB<br>10/15/2008<br>C8J160299010 | | | | TB02_10-08<br>TB<br>10/17/2008<br>C8J180168032 | | | | TB-03<br>TB<br>10/20/2008<br>C8J220361012 | | | |
|---|---|---|---|---|---|---|---|---|---|---|---|---|---|---|---|---|---|---|---|---|---|---|---|---|---|---|---|---|---|---|---|---|---|---|---|
| ***RCRA APPENDIX IX VOLATILE ORGANIC COMPOUNDS (Method 8260*** | | | | Result | DF | Q | RL | Result | DF | Q | RL | Result | DF | Q | RL | Result | DF | Q | RL | Result | DF | Q | RL | Result | DF | Q | RL | Result | DF | Q | RL | Result | DF | Q | RL |
| 1,1,1,2-TETRACHLOROETHANE | 630-20-6 | 7000 | ug/l | ND | 1 | | 1 | ND | 1 | | 1 | ND | 1 | | 1 | ND | 1 | | 1 | ND | 1 | | 1 | ND | 1 | | 1 | ND | 1 | | 1 | ND | 1 | | 1 |
| 1,1,1-TRICHLOROETHANE | 71-55-6 | 2000 | ug/l | ND | 1 | | 1 | ND | 1 | | 1 | ND | 1 | | 1 | ND | 1 | | 1 | ND | 1 | | 1 | ND | 1 | | 1 | ND | 1 | | 1 | ND | 1 | | 1 |
| 1,1,2,2-TETRACHLOROETHANE | 79-34-5 | 30 | ug/l | ND | 1 | | 1 | ND | 1 | | 1 | ND | 1 | | 1 | ND | 1 | | 1 | ND | 1 | | 1 | ND | 1 | | 1 | ND | 1 | | 1 | ND | 1 | | 1 |
| 1,1,2-TRICHLOROETHANE | 79-00-5 | 50 | ug/l | ND | 1 | | 1 | ND | 1 | | 1 | ND | 1 | | 1 | ND | 1 | | 1 | ND | 1 | | 1 | ND | 1 | | 1 | ND | 1 | | 1 | ND | 1 | | 1 |
| 1,1-DICHLOROETHANE | 75-34-3 | 1100 | ug/l | ND | 1 | | 1 | ND | 1 | | 1 | ND | 1 | | 1 | ND | 1 | | 1 | ND | 1 | | 1 | ND | 1 | | 1 | ND | 1 | | 1 | ND | 1 | | 1 |
| 1,1-DICHLOROETHYLENE | 75-35-4 | 70 | ug/l | ND | 1 | | 1 | ND | 1 | | 1 | ND | 1 | | 1 | ND | 1 | | 1 | ND | 1 | | 1 | ND | 1 | | 1 | ND | 1 | | 1 | ND | 1 | | 1 |
| 1,2,3-TRICHLOROPROPANE | 96-18-4 | 4000 | ug/l | ND | 1 | | 1 | ND | 1 | | 1 | ND | 1 | | 1 | ND | 1 | | 1 | ND | 1 | | 1 | ND | 1 | | 1 | ND | 1 | | 1 | ND | 1 | | 1 |
| 1,2-DIBROMO-3-CHLOROPROPANE (DBCP) | 96-12-8 | 20 | ug/l | ND | 1 | | 1 | ND | 1 | | 1 | ND | 1 | | 1 | ND | 1 | | 1 | ND | 1 | | 1 | ND | 1 | | 1 | ND | 1 | | 1 | ND | 1 | | 1 |
| 1,2-DIBROMOETHANE | 106-93-4 | 5 | ug/l | ND | 1 | | 1 | ND | 1 | | 1 | ND | 1 | | 1 | ND | 1 | | 1 | ND | 1 | | 1 | ND | 1 | | 1 | ND | 1 | | 1 | ND | 1 | | 1 |
| 1,2-DICHLOROETHANE | 107-06-2 | 50 | ug/l | ND | 1 | | 1 | ND | 1 | | 1 | ND | 1 | | 1 | ND | 1 | | 1 | ND | 1 | | 1 | ND | 1 | | 1 | ND | 1 | | 1 | ND | 1 | | 1 |
| 1,2-DICHLOROPROPANE | 78-87-5 | 50 | ug/l | ND | 1 | | 1 | ND | 1 | | 1 | ND | 1 | | 1 | ND | 1 | | 1 | ND | 1 | | 1 | ND | 1 | | 1 | ND | 1 | | 1 | ND | 1 | | 1 |
| 1,4-DIOXANE | 123-91-1 | 240 | ug/l | ND | 1 | | 200 | ND | 1 | | 200 | ND | 1 | | 200 | ND | 1 | | 200 | ND | 1 | | 200 | ND | 1 | | 200 | ND | 1 | | 200 | ND | 1 | | 200 |
| 2-BUTANONE (MEK) | 78-93-3 | 580000 | ug/l | ND | 1 | | 5 | ND | 1 | | 5 | ND | 1 | | 5 | ND | 1 | | 5 | 0.72 | 1 | J | 5 | 0.67 | 1 | J | 5 | ND | 1 | | 5 | 0.63 | 1 | J | 5 |
| 2-CHLOR-1,3-BUTADIENE | 126-99-8 | 4100 | ug/l | ND | 1 | | 1 | ND | 1 | | 1 | ND | 1 | | 1 | ND | 1 | | 1 | ND | 1 | | 1 | ND | 1 | | 1 | ND | 1 | | 1 | ND | 1 | | 1 |
| 2-METHYL-1-PROPANOL | 78-83-1 | 610000 | ug/l | ND | 1 | | 40 | ND | 1 | | 40 | ND | 1 | | 40 | ND | 1 | | 40 | ND | 1 | | 40 | ND | 1 | | 40 | ND | 1 | | 40 | ND | 1 | | 40 |
| 4-METHYL-2-PENTANONE (MIBK) | 108-10-1 | 41000 | ug/l | ND | 1 | | 5 | ND | 1 | | 5 | ND | 1 | | 5 | ND | 1 | | 5 | ND | 1 | | 5 | ND | 1 | | 5 | ND | 1 | | 5 | ND | 1 | | 5 |
| ACETONE | 67-64-1 | 100000 | ug/l | 3.3 | 1 | J | 5 | 2.8 | 1 | J | 5 | ND | 1 | | 5 | 2.8 | 1 | J | 5 | ND | 1 | | 5 | 3.7 | 1 | J | 5 | 3.3 | 1 | J | 5 | 4.2 | 1 | J | 5 |
| ACETONITRILE | 75-05-8 | 3500 | ug/l | ND | 1 | | 20 | ND | 1 | | 20 | ND | 1 | | 20 | ND | 1 | | 20 | ND | 1 | | 20 | ND | 1 | | 20 | ND | 1 | | 20 | ND | 1 | | 20 |
| ACROLEIN | 107-02-8 | 1.2 | ug/l | ND | 1 | | ***20*** | ND | 1 | | ***20*** | ND | 1 | | ***20*** | ND | 1 | | ***20*** | ND | 1 | | ***20*** | ND | 1 | | ***20*** | ND | 1 | | ***20*** | ND | 1 | | ***20*** |
| ACRYLONITRILE | 107-13-1 | 270 | ug/l | ND | 1 | | 20 | ND | 1 | | 20 | ND | 1 | | 20 | ND | 1 | | 20 | ND | 1 | | 20 | ND | 1 | | 20 | ND | 1 | | 20 | ND | 1 | | 20 |
| ALLYLCHLORIDE | 107-05-1 | 580 | ug/l | ND | 1 | | 1 | ND | 1 | | 1 | ND | 1 | | 1 | ND | 1 | | 1 | ND | 1 | | 1 | ND | 1 | | 1 | ND | 1 | | 1 | ND | 1 | | 1 |
| BENZENE | 71-43-2 | 500 | ug/l | ND | 1 | | 1 | ND | 1 | | 1 | ND | 1 | | 1 | ND | 1 | | 1 | ND | 1 | | 1 | ND | 1 | | 1 | ND | 1 | | 1 | ND | 1 | | 1 |
| BROMODICHLOROMETHANE | 75-27-4 | 100 | ug/l | ND | 1 | | 1 | ND | 1 | | 1 | ND | 1 | | 1 | ND | 1 | | 1 | ND | 1 | | 1 | ND | 1 | | 1 | ND | 1 | | 1 | ND | 1 | | 1 |
| BROMOMETHANE | 74-83-9 | 1000 | ug/l | ND | 1 | | 1 | ND | 1 | | 1 | ND | 1 | | 1 | ND | 1 | | 1 | ND | 1 | | 1 | ND | 1 | | 1 | ND | 1 | | 1 | ND | 1 | | 1 |
| CARBON DISULFIDE | 75-15-0 | 4100 | ug/l | ND | 1 | | 1 | ND | 1 | | 1 | ND | 1 | | 1 | ND | 1 | | 1 | ND | 1 | | 1 | ND | 1 | | 1 | ND | 1 | | 1 | ND | 1 | | 1 |
| CARBON TETRACHLORIDE | 56-23-5 | 50 | ug/l | ND | 1 | | 1 | ND | 1 | | 1 | ND | 1 | | 1 | ND | 1 | | 1 | ND | 1 | | 1 | ND | 1 | | 1 | ND | 1 | | 1 | ND | 1 | | 1 |
| CFC-11 | 75-69-4 | 200000 | ug/l | ND | 1 | | 1 | ND | 1 | | 1 | ND | 1 | | 1 | ND | 1 | | 1 | ND | 1 | | 1 | ND | 1 | | 1 | ND | 1 | | 1 | ND | 1 | | 1 |
| CFC-12 | 75-71-8 | 100000 | ug/l | ND | 1 | | 1 | ND | 1 | | 1 | ND | 1 | | 1 | ND | 1 | | 1 | ND | 1 | | 1 | ND | 1 | | 1 | ND | 1 | | 1 | ND | 1 | | 1 |
| CHLOROBENZENE | 108-90-7 | 10000 | ug/l | ND | 1 | | 1 | ND | 1 | | 1 | ND | 1 | | 1 | ND | 1 | | 1 | ND | 1 | | 1 | ND | 1 | | 1 | ND | 1 | | 1 | ND | 1 | | 1 |
| CHLORODIBROMOMETHANE | 124-48-1 | 10000 | ug/l | ND | 1 | | 1 | ND | 1 | | 1 | ND | 1 | | 1 | ND | 1 | | 1 | ND | 1 | | 1 | ND | 1 | | 1 | ND | 1 | | 1 | ND | 1 | | 1 |
| CHLOROETHANE | 75-00-3 | 90000 | ug/l | ND | 1 | | 1 | ND | 1 | | 1 | ND | 1 | | 1 | ND | 1 | | 1 | ND | 1 | | 1 | ND | 1 | | 1 | ND | 1 | | 1 | ND | 1 | | 1 |
| CHLOROFORM | 67-66-3 | 1000 | ug/l | ND | 1 | | 1 | ND | 1 | | 1 | ND | 1 | | 1 | ND | 1 | | 1 | ND | 1 | | 1 | ND | 1 | | 1 | ND | 1 | | 1 | ND | 1 | | 1 |
| CHLOROMETHANE | 74-87-3 | 300 | ug/l | ND | 1 | | 1 | ND | 1 | | 1 | ND | 1 | | 1 | ND | 1 | | 1 | ND | 1 | | 1 | ND | 1 | | 1 | ND | 1 | | 1 | ND | 1 | | 1 |
| CIS-1,3-DICHLOROPROPENE | 10061-01-5 | NS | ug/l | ND | 1 | | 1 | ND | 1 | | 1 | ND | 1 | | 1 | ND | 1 | | 1 | ND | 1 | | 1 | ND | 1 | | 1 | ND | 1 | | 1 | ND | 1 | | 1 |
| DIBROMOMETHANE | 74-95-3 | 20000 | ug/l | ND | 1 | | 1 | ND | 1 | | 1 | ND | 1 | | 1 | ND | 1 | | 1 | ND | 1 | | 1 | ND | 1 | | 1 | ND | 1 | | 1 | ND | 1 | | 1 |
| DICHLOROMETHANE | 75-09-2 | 500 | ug/l | 1.3 | 1 | | 1 | 1.5 | 1 | | 1 | 1.5 | 1 | | 1 | 1.3 | 1 | | 1 | ND | 1 | | 1 | 2.1 | 1 | | 1 | 2 | 1 | | 1 | 2 | 1 | | 1 |
| ETHYL METHACRYLATE | 97-63-2 | 1800 | ug/l | ND | 1 | | 1 | ND | 1 | | 1 | ND | 1 | | 1 | ND | 1 | | 1 | ND | 1 | | 1 | ND | 1 | | 1 | ND | 1 | | 1 | ND | 1 | | 1 |
| ETHYLBENZENE | 100-41-4 | 70000 | ug/l | ND | 1 | | 1 | ND | 1 | | 1 | ND | 1 | | 1 | ND | 1 | | 1 | ND | 1 | | 1 | ND | 1 | | 1 | ND | 1 | | 1 | ND | 1 | | 1 |
| IODOMETHANE | 74-88-4 | 5 | ug/l | ND | 1 | | 1 | ND | 1 | | 1 | ND | 1 | | 1 | ND | 1 | | 1 | ND | 1 | | 1 | ND | 1 | | 1 | ND | 1 | | 1 | ND | 1 | | 1 |
| METHYL METHACRYLATE | 80-62-6 | 410000 | ug/l | ND | 1 | | 1 | ND | 1 | | 1 | ND | 1 | | 1 | ND | 1 | | 1 | ND | 1 | | 1 | ND | 1 | | 1 | ND | 1 | | 1 | ND | 1 | | 1 |
| METHYL N-BUTYL KETONE | 591-78-6 | 5 | ug/l | ND | 1 | | 5 | ND | 1 | | 5 | ND | 1 | | 5 | ND | 1 | | 5 | ND | 1 | | 5 | ND | 1 | | 5 | ND | 1 | | 5 | ND | 1 | | 5 |
| METHYLACRYLONITRILE | 126-98-7 | 4.1 | ug/l | ND | 1 | | 1 | ND | 1 | | 1 | ND | 1 | | 1 | ND | 1 | | 1 | ND | 1 | | 1 | ND | 1 | | 1 | ND | 1 | | 1 | ND | 1 | | 1 |
| PENTACHLOROETHANE | 76-01-7 | 5 | ug/l | ND | 1 | | 2.1 | ND | 1 | | 2.1 | ND | 1 | | 2.1 | ND | 1 | | 2.1 | ND | 1 | | 2 | ND | 1 | | 2 | ND | 1 | | 2 | ND | 1 | | 2 |
| PROPIONITRILE | 107-12-0 | 5 | ug/l | ND | 1 | | 2 | ND | 1 | | 2 | ND | 1 | | 2 | ND | 1 | | 2 | ND | 1 | | 2 | ND | 1 | | 2 | ND | 1 | | 2 | ND | 1 | | 2 |
| STYRENE (MONOMER) | 100-42-5 | 10000 | ug/l | ND | 1 | | 1 | ND | 1 | | 1 | ND | 1 | | 1 | ND | 1 | | 1 | ND | 1 | | 1 | ND | 1 | | 1 | ND | 1 | | 1 | ND | 1 | | 1 |
| TETRACHLOROETHENE | 127-18-4 | 50 | ug/l | ND | 1 | | 1 | ND | 1 | | 1 | ND | 1 | | 1 | ND | 1 | | 1 | ND | 1 | | 1 | ND | 1 | | 1 | ND | 1 | | 1 | ND | 1 | | 1 |
| TOLUENE | 108-88-3 | 100000 | ug/l | ND | 1 | | 1 | ND | 1 | | 1 | ND | 1 | | 1 | ND | 1 | | 1 | ND | 1 | | 1 | ND | 1 | | 1 | ND | 1 | | 1 | ND | 1 | | 1 |
| TRANS-1,2-DICHLOROETHENE | 156-60-5 | 1000 | ug/l | ND | 1 | | 1 | ND | 1 | | 1 | ND | 1 | | 1 | ND | 1 | | 1 | ND | 1 | | 1 | ND | 1 | | 1 | ND | 1 | | 1 | ND | 1 | | 1 |
| TRANS-1,3-DICHLOROPROPENE | 10061-02-6 | NS | ug/l | ND | 1 | | 1 | ND | 1 | | 1 | ND | 1 | | 1 | ND | 1 | | 1 | ND | 1 | | 1 | ND | 1 | | 1 | ND | 1 | | 1 | ND | 1 | | 1 |
| TRANS-1,4-DICHLOROBUTENE | 110-57-6 | 5 | ug/l | ND | 1 | | 1 | ND | 1 | | 1 | ND | 1 | | 1 | ND | 1 | | 1 | ND | 1 | | 1 | ND | 1 | | 1 | ND | 1 | | 1 | ND | 1 | | 1 |
| TRIBROMOMETHANE | 75-25-2 | 10000 | ug/l | ND | 1 | | 1 | ND | 1 | | 1 | ND | 1 | | 1 | ND | 1 | | 1 | ND | 1 | | 1 | ND | 1 | | 1 | ND | 1 | | 1 | ND | 1 | | 1 |
| TRICHLOROETHYLENE | 79-01-6 | 50 | ug/l | ND | 1 | | 1 | ND | 1 | | 1 | ND | 1 | | 1 | ND | 1 | | 1 | ND | 1 | | 1 | ND | 1 | | 1 | ND | 1 | | 1 | ND | 1 | | 1 |
| VINYL ACETATE | 108-05-4 | 1200 | ug/l | ND | 1 | | 1 | ND | 1 | | 1 | ND | 1 | | 1 | ND | 1 | | 1 | ND | 1 | | 1 | ND | 1 | | 1 | ND | 1 | | 1 | ND | 1 | | 1 |
| VINYL CHLORIDE | 75-01-4 | 20 | ug/l | ND | 1 | | 1 | ND | 1 | | 1 | ND | 1 | | 1 | ND | 1 | | 1 | ND | 1 | | 1 | ND | 1 | | 1 | ND | 1 | | 1 | ND | 1 | | 1 |
| XYLENE (TOTAL) | 1330-20-7 | 180000 | ug/l | ND | 1 | | 3 | ND | 1 | | 3 | ND | 1 | | 3 | ND | 1 | | 3 | ND | 1 | | 3 | ND | 1 | | 3 | ND | 1 | | 3 | ND | 1 | | 3 |

**Table 5**
**Summary of Groundwater Analytical Results - October 2008**
**Comparison to Pennsyvania Non-Residential Non-Use Aquifer Groundwater MSCs**
**U.S. Steel - RCRA Groundwater Sampling**
**Fairless Hills, Pennsylvania**

| | CAS No | PADEP Non-Residentail Non-Use Aquifer GW MSC | Location ID | FB001_10-08 | | | | FB002_10-08 | | | | FB03_10-08 | | | | FB04_10-08 | | | | FB-05_10-08 | | | | TB-01_10-08 | | | | TB02_10-08 | | | | TB-03 | | | |
|---|---|---|---|---|---|---|---|---|---|---|---|---|---|---|---|---|---|---|---|---|---|---|---|---|---|---|---|---|---|---|---|---|---|---|---|
| | | | Sample ID | FB | | | | FB | | | | FB | | | | FB | | | | C8J220361011 | | | | TB | | | | TB | | | | TB | | | |
| | | | Sample Date | 10/14/2008 | | | | 10/15/2008 | | | | 10/16/2008 | | | | 10/17/2008 | | | | 10/20/2008 | | | | 10/15/2008 | | | | 10/17/2008 | | | | 10/20/2008 | | | |
| | | | Lab Id | C8J160299012 | | | | C8J160299009 | | | | C8J180168010 | | | | C8J180168031 | | | | C8J220361011 | | | | C8J160299010 | | | | C8J180168032 | | | | C8J220361012 | | | |
| ***RCRA APPENDIX IX SEMI-VOLATILE ORGANIC COMPOUNDS (Method 8270*** | | | | Result | DF | Q | RL | Result | DF | Q | RL | Result | DF | Q | RL | Result | DF | Q | RL | Result | DF | Q | RL | Result | DF | Q | RL | Result | DF | Q | RL | Result | DF | Q | RL |
| 1,2,4,5-TETRACHLOROBENZENE | 95-94-3 | 580 | ug/l | ND | 1.06 | | 1.1 | ND | 1.03 | | 1 | ND | 1.04 | | 1 | ND | 1.04 | | 1 | ND | 1.02 | | 1 | - | - | - | - | - | - | - | - | - | - | - | - |
| 1,2,4-TRICHLOROBENZENE | 120-82-1 | 44000 | ug/l | ND | 1.06 | | 0.21 | ND | 1.03 | | 0.21 | ND | 1.04 | | 0.21 | ND | 1.04 | | 0.21 | ND | 1.02 | | 0.2 | - | - | - | - | - | - | - | - | - | - | - | - |
| 1,2-DICHLOROBENZENE | 95-50-1 | 60000 | ug/l | ND | 1.06 | | 0.21 | ND | 1.03 | | 0.21 | ND | 1.04 | | 0.21 | ND | 1.04 | | 0.21 | ND | 1.02 | | 0.2 | - | - | - | - | - | - | - | - | - | - | - | - |
| 1,3,5-TRINITROBENZENE | 99-35-4 | NS | ug/l | ND | 1.06 | | 1.1 | ND | 1.03 | | 1 | ND | 1.04 | | 1 | ND | 1.04 | | 1 | ND | 1.02 | | 1 | - | - | - | - | - | - | - | - | - | - | - | - |
| 1,4-DICHLOROBENZENE | 106-46-7 | 7500 | ug/l | ND | 1.06 | | 0.21 | ND | 1.03 | | 0.21 | ND | 1.04 | | 0.21 | ND | 1.04 | | 0.21 | ND | 1.02 | | 0.2 | - | - | - | - | - | - | - | - | - | - | - | - |
| 1,4-NAPHTHOQUINONE | 130-15-4 | 5 | ug/l | ND | 1.06 | | 1.1 | ND | 1.03 | | 1 | ND | 1.04 | | 1 | ND | 1.04 | | 1 | ND | 1.02 | | 1 | - | - | - | - | - | - | - | - | - | - | - | - |
| 1-NAPHTHYLAMINE | 134-32-7 | 1400 | ug/l | ND | 1.06 | | 1.1 | ND | 1.03 | | 1 | ND | 1.04 | | 1 | ND | 1.04 | | 1 | ND | 1.02 | | 1 | - | - | - | - | - | - | - | - | - | - | - | - |
| 2,4,5-TRICHLOROPHENOL | 95-95-4 | 1000000 | ug/l | ND | 1.06 | | 1.1 | ND | 1.03 | | 1 | ND | 1.04 | | 1 | ND | 1.04 | | 1 | ND | 1.02 | | 1 | - | - | - | - | - | - | - | - | - | - | - | - |
| 2,4,6-TRICHLOROPHENOL | 88-06-2 | 31000 | ug/l | ND | 1.06 | | 1.1 | ND | 1.03 | | 1 | ND | 1.04 | | 1 | ND | 1.04 | | 1 | ND | 1.02 | | 1 | - | - | - | - | - | - | - | - | - | - | - | - |
| 2,4-DICHLOROPHENOL | 120-83-2 | 20000 | ug/l | ND | 1.06 | | 0.21 | ND | 1.03 | | 0.21 | ND | 1.04 | | 0.21 | ND | 1.04 | | 0.21 | ND | 1.02 | | 0.2 | - | - | - | - | - | - | - | - | - | - | - | - |
| 2,4-DIMETHYLPHENOL | 105-67-9 | 2000000 | ug/l | ND | 1.06 | | 1.1 | ND | 1.03 | | 1 | ND | 1.04 | | 1 | ND | 1.04 | | 1 | ND | 1.02 | | 1 | - | - | - | - | - | - | - | - | - | - | - | - |
| 2,4-DINITROPHENOL | 51-28-5 | 410 | ug/l | ND | 1.06 | | 5.3 | ND | 1.03 | | 5.2 | ND | 1.04 | | 5.2 | ND | 1.04 | | 5.2 | ND | 1.02 | | 5.1 | - | - | - | - | - | - | - | - | - | - | - | - |
| 2,4-DINITROTOLUENE | 121-14-2 | 8400 | ug/l | ND | 1.06 | | 1.1 | ND | 1.03 | | 1 | ND | 1.04 | | 1 | ND | 1.04 | | 1 | ND | 1.02 | | 1 | - | - | - | - | - | - | - | - | - | - | - | - |
| 2,6-DICHLOROPHENOL | 87-65-0 | NS | ug/l | ND | 1.06 | | 0.21 | ND | 1.03 | | 0.21 | ND | 1.04 | | 0.21 | ND | 1.04 | | 0.21 | ND | 1.02 | | 0.2 | - | - | - | - | - | - | - | - | - | - | - | - |
| 2,6-DINITROTOLUENE | 606-20-2 | 100000 | ug/l | ND | 1.06 | | 1.1 | ND | 1.03 | | 1 | ND | 1.04 | | 1 | ND | 1.04 | | 1 | ND | 1.02 | | 1 | - | - | - | - | - | - | - | - | - | - | - | - |
| 2-ACETYLAMINOFLUORENE | 53-96-3 | 680 | ug/l | ND | 1.06 | | 1.1 | ND | 1.03 | | 1 | ND | 1.04 | | 1 | ND | 1.04 | | 1 | ND | 1.02 | | 1 | - | - | - | - | - | - | - | - | - | - | - | - |
| 2-CHLORONAPHTHALENE | 91-58-7 | 8200 | ug/l | ND | 1.06 | | 0.21 | ND | 1.03 | | 0.21 | ND | 1.04 | | 0.21 | ND | 1.04 | | 0.21 | ND | 1.02 | | 0.2 | - | - | - | - | - | - | - | - | - | - | - | - |
| 2-CHLOROPHENOL | 95-57-8 | 40 | ug/l | ND | 1.06 | | 1.1 | ND | 1.03 | | 1 | ND | 1.04 | | 1 | ND | 1.04 | | 1 | ND | 1.02 | | 1 | - | - | - | - | - | - | - | - | - | - | - | - |
| 2-METHYL PYRIDINE (2-PICOLINE) | 109-06-8 | 5 | ug/l | ND | 1.06 | | 1.1 | ND | 1.03 | | 1 | ND | 1.04 | | 1 | ND | 1.04 | | 1 | ND | 1.02 | | 1 | - | - | - | - | - | - | - | - | - | - | - | - |
| 2-METHYLNAPHTHALENE | 91-57-6 | 2000 | ug/l | ND | 1.06 | | 0.21 | ND | 1.03 | | 0.21 | ND | 1.04 | | 0.21 | ND | 1.04 | | 0.21 | ND | 1.02 | | 0.2 | - | - | - | - | - | - | - | - | - | - | - | - |
| 2-METHYLPHENOL | 95-48-7 | 510000 | ug/l | ND | 1.06 | | 1.1 | ND | 1.03 | | 1 | ND | 1.04 | | 1 | ND | 1.04 | | 1 | ND | 1.02 | | 1 | - | - | - | - | - | - | - | - | - | - | - | - |
| 2-NAPHTHALENAMINE (2-NAPHTHYLAMINE) | 91-59-8 | 1400 | ug/l | ND | 1.06 | | 1.1 | ND | 1.03 | | 1 | ND | 1.04 | | 1 | ND | 1.04 | | 1 | ND | 1.02 | | 1 | - | - | - | - | - | - | - | - | - | - | - | - |
| 2-NITROANILINE | 88-74-4 | 5.8 | ug/l | ND | 1.06 | | 5.3 | ND | 1.03 | | 5.2 | ND | 1.04 | | 5.2 | ND | 1.04 | | 5.2 | ND | 1.02 | | 5.1 | - | - | - | - | - | - | - | - | - | - | - | - |
| 2-NITROPHENOL | 88-75-5 | 820000 | ug/l | ND | 1.06 | | 1.1 | ND | 1.03 | | 1 | ND | 1.04 | | 1 | ND | 1.04 | | 1 | ND | 1.02 | | 1 | - | - | - | - | - | - | - | - | - | - | - | - |
| 3,3'-DICHLOROBENZIDINE | 91-94-1 | 3100 | ug/l | ND | 1.06 | | 1.1 | ND | 1.03 | | 1 | ND | 1.04 | | 1 | ND | 1.04 | | 1 | ND | 1.02 | | 1 | - | - | - | - | - | - | - | - | - | - | - | - |
| 3,3'-DIMETHYLBENZIDINE | 119-93-7 | 280 | ug/l | ND | 1.06 | | 11 | ND | 1.03 | | 10 | ND | 1.04 | | 10 | ND | 1.04 | | 10 | ND | 1.02 | | 10 | - | - | - | - | - | - | - | - | - | - | - | - |
| 3,5,5-TRIMETHYL-2-CYCLOHEXENE-1-ONE | 78-59-1 | 100000 | ug/l | ND | 1.06 | | 1.1 | ND | 1.03 | | 1 | ND | 1.04 | | 1 | ND | 1.04 | | 1 | ND | 1.02 | | 1 | - | - | - | - | - | - | - | - | - | - | - | - |
| 3-METHYLCHLORANTHRENE | 56-49-5 | NS | ug/l | ND | 1.06 | | 1.1 | ND | 1.03 | | 1 | ND | 1.04 | | 1 | ND | 1.04 | | 1 | ND | 1.02 | | 1 | - | - | - | - | - | - | - | - | - | - | - | - |
| 3-Methylphenol & 4-Methylphenol | 65794-96-9 | NS | ug/l | ND | 1.06 | | 1.1 | 0.3 | 1.03 | J | 1 | ND | 1.04 | | 1 | ND | 1.04 | | 1 | ND | 1.02 | | 1 | - | - | - | - | - | - | - | - | - | - | - | - |
| 3-NITROANILINE | 99-09-2 | 5.8 | ug/l | ND | 1.06 | | 5.3 | ND | 1.03 | | 5.2 | ND | 1.04 | | 5.2 | ND | 1.04 | | 5.2 | ND | 1.02 | | 5.1 | - | - | - | - | - | - | - | - | - | - | - | - |
| 4,6-DINITRO-2-METHYLPHENOL | 534-52-1 | 5 | ug/l | ND | 1.06 | | ***5.3*** | ND | 1.03 | | ***5.2*** | ND | 1.04 | | ***5.2*** | ND | 1.04 | | ***5.2*** | ND | 1.02 | | ***5.1*** | - | - | - | - | - | - | - | - | - | - | - | - |
| 4-AMINOBIPHENYL | 92-67-1 | 120 | ug/l | ND | 1.06 | | 1.1 | ND | 1.03 | | 1 | ND | 1.04 | | 1 | ND | 1.04 | | 1 | ND | 1.02 | | 1 | - | - | - | - | - | - | - | - | - | - | - | - |
| 4-BROMOPHENYL PHENYL ETHER | 101-55-3 | 5 | ug/l | ND | 1.06 | | 1.1 | ND | 1.03 | | 1 | ND | 1.04 | | 1 | ND | 1.04 | | 1 | ND | 1.02 | | 1 | - | - | - | - | - | - | - | - | - | - | - | - |
| 4-CHLORO-3-METHYLPHENOL | 59-50-7 | 510 | ug/l | ND | 1.06 | | 1.1 | ND | 1.03 | | 1 | ND | 1.04 | | 1 | ND | 1.04 | | 1 | ND | 1.02 | | 1 | - | - | - | - | - | - | - | - | - | - | - | - |
| 4-CHLOROPHENYL PHENYL ETHER | 7005-72-3 | 5 | ug/l | ND | 1.06 | | 1.1 | ND | 1.03 | | 1 | ND | 1.04 | | 1 | ND | 1.04 | | 1 | ND | 1.02 | | 1 | - | - | - | - | - | - | - | - | - | - | - | - |
| 4-DIMETHYLAMINOAZOBENZENE | 60-11-7 | 570 | ug/l | ND | 1.06 | | 1.1 | ND | 1.03 | | 1 | ND | 1.04 | | 1 | ND | 1.04 | | 1 | ND | 1.02 | | 1 | - | - | - | - | - | - | - | - | - | - | - | - |
| 4-NITROPHENOL | 100-02-7 | 60000 | ug/l | ND | 1.06 | | 5.3 | ND | 1.03 | | 5.2 | ND | 1.04 | | 5.2 | ND | 1.04 | | 5.2 | ND | 1.02 | | 5.1 | - | - | - | - | - | - | - | - | - | - | - | - |
| 4-NITROQUINOLINE-N-OXIDE | 56-57-5 | 5 | ug/l | ND | 1.06 | | ***11*** | ND | 1.03 | | ***10*** | ND | 1.04 | | ***10*** | ND | 1.04 | | ***10*** | ND | 1.02 | | ***10*** | - | - | - | - | - | - | - | - | - | - | - | - |
| 5-NITRO-O-TOLUIDINE | 99-55-8 | NS | ug/l | ND | 1.06 | | 11 | ND | 1.03 | | 10 | ND | 1.04 | | 10 | ND | 1.04 | | 10 | ND | 1.02 | | 10 | - | - | - | - | - | - | - | - | - | - | - | - |
| 7,12-DIMETHYLBENZ(A)ANTHRACENE | 57-97-6 | NS | ug/l | ND | 1.06 | | 1.1 | ND | 1.03 | | 1 | ND | 1.04 | | 1 | ND | 1.04 | | 1 | ND | 1.02 | | 1 | - | - | - | - | - | - | - | - | - | - | - | - |
| a,a-Dimethylphenethylamine | 122-09-8 | 5 | ug/l | ND | 1.06 | | 1.1 | ND | 1.03 | | 1 | ND | 1.04 | | 1 | ND | 1.04 | | 1 | ND | 1.02 | | 1 | - | - | - | - | - | - | - | - | - | - | - | - |
| ACENAPHTHENE | 83-32-9 | 3800 | ug/l | ND | 1.06 | | 0.21 | ND | 1.03 | | 0.21 | ND | 1.04 | | 0.21 | ND | 1.04 | | 0.21 | ND | 1.02 | | 0.2 | - | - | - | - | - | - | - | - | - | - | - | - |
| ACENAPHTHYLENE | 208-96-8 | 16000 | ug/l | ND | 1.06 | | 0.21 | ND | 1.03 | | 0.21 | ND | 1.04 | | 0.21 | ND | 1.04 | | 0.21 | ND | 1.02 | | 0.2 | - | - | - | - | - | - | - | - | - | - | - | - |
| ACETOPHENONE | 98-86-2 | 10000 | ug/l | 0.051 | 1.06 | J | 1.1 | ND | 1.03 | | 1 | 0.3 | 1.04 | J | 1 | 0.2 | 1.04 | J | 1 | ND | 1.02 | | 1 | - | - | - | - | - | - | - | - | - | - | - | - |
| ANILINE | 62-53-3 | 5.8 | ug/l | ND | 1.06 | | 1.1 | ND | 1.03 | | 1 | ND | 1.04 | | 1 | ND | 1.04 | | 1 | ND | 1.02 | | 1 | - | - | - | - | - | - | - | - | - | - | - | - |
| ANTHRACENE | 120-12-7 | 66 | ug/l | ND | 1.06 | | 0.21 | ND | 1.03 | | 0.21 | ND | 1.04 | | 0.21 | ND | 1.04 | | 0.21 | ND | 1.02 | | 0.2 | - | - | - | - | - | - | - | - | - | - | - | - |
| ARAMITE | 140-57-8 | NS | ug/l | ND | 1.06 | | 1.1 | ND | 1.03 | | 1 | ND | 1.04 | | 1 | ND | 1.04 | | 1 | ND | 1.02 | | 1 | - | - | - | - | - | - | - | - | - | - | - | - |
| BENZO(A)ANTHRACENE | 56-55-3 | 11 | ug/l | ND | 1.06 | | 0.21 | ND | 1.03 | | 0.21 | ND | 1.04 | | 0.21 | ND | 1.04 | | 0.21 | ND | 1.02 | | 0.2 | - | - | - | - | - | - | - | - | - | - | - | - |
| BENZO(A)PYRENE | 50-32-8 | 3.8 | ug/l | ND | 1.06 | | 0.21 | ND | 1.03 | | 0.21 | ND | 1.04 | | 0.21 | ND | 1.04 | | 0.21 | ND | 1.02 | | 0.2 | - | - | - | - | - | - | - | - | - | - | - | - |
| BENZO(B)FLUORANTHENE | 205-99-2 | 1.2 | ug/l | ND | 1.06 | | 0.21 | ND | 1.03 | | 0.21 | ND | 1.04 | | 0.21 | ND | 1.04 | | 0.21 | ND | 1.02 | | 0.2 | - | - | - | - | - | - | - | - | - | - | - | - |
| BENZO(GHI)PERYLENE | 191-24-2 | 0.26 | ug/l | ND | 1.06 | | 0.21 | ND | 1.03 | | 0.21 | ND | 1.04 | | 0.21 | ND | 1.04 | | 0.21 | ND | 1.02 | | 0.2 | - | - | - | - | - | - | - | - | - | - | - | - |
| BENZO(K)FLUORANTHENE | 207-08-9 | 0.55 | ug/l | ND | 1.06 | | 0.21 | ND | 1.03 | | 0.21 | ND | 1.04 | | 0.21 | ND | 1.04 | | 0.21 | ND | 1.02 | | 0.2 | - | - | - | - | - | - | - | - | - | - | - | - |
| BENZYL ALCOHOL | 100-51-6 | 31000 | ug/l | ND | 1.06 | | 1.1 | ND | 1.03 | | 1 | ND | 1.04 | | 1 | ND | 1.04 | | 1 | ND | 1.02 | | 1 | - | - | - | - | - | - | - | - | - | - | - | - |
| BENZYL BUTYL PHTHALATE | 85-68-7 | 2700 | ug/l | ND | 1.06 | | 1.1 | ND | 1.03 | | 1 | 0.17 | 1.04 | J | 1 | ND | 1.04 | | 1 | 0.14 | 1.02 | JB | 1 | - | - | - | - | - | - | - | - | - | - | - | - |
| BIS(2-CHLORO-1-METHYLETHYL) ETHER | 108-60-1 | 30000 | ug/l | ND | 1.06 | | 0.21 | ND | 1.03 | | 0.21 | ND | 1.04 | | 0.21 | ND | 1.04 | | 0.21 | ND | 1.02 | | 0.2 | - | - | - | - | - | - | - | - | - | - | - | - |
| BIS(2-CHLOROETHOXY)METHANE | 111-91-1 | 5 | ug/l | ND | 1.06 | | 1.1 | ND | 1.03 | | 1 | ND | 1.04 | | 1 | ND | 1.04 | | 1 | ND | 1.02 | | 1 | - | - | - | - | - | - | - | - | - | - | - | - |
| BIS(2-CHLOROETHYL) ETHER | 111-44-4 | 55 | ug/l | ND | 1.06 | | 0.21 | ND | 1.03 | | 0.21 | ND | 1.04 | | 0.21 | ND | 1.04 | | 0.21 | ND | 1.02 | | 0.2 | - | - | - | - | - | - | - | - | - | - | - | - |
| BIS(2-ETHYLHEXYL)PHTHALATE | 117-81-7 | 290 | ug/l | ND | 1.06 | | 1.1 | ND | 1.03 | | 1 | 0.38 | 1.04 | J | 1 | ND | 1.04 | | 1 | ND | 1.02 | | 1 | - | - | - | - | - | - | - | - | - | - | - | - |
| CHLORDECONE (KEPONE) | 143-50-0 | 160 | ug/l | ND | 1.06 | | 4.2 | ND | 1.03 | | 4.1 | ND | 1.04 | | 4.2 | ND | 1.04 | | 4.2 | ND | 1.02 | | 4.1 | - | - | - | - | - | - | - | - | - | - | - | - |

**Table 5**
**Summary of Groundwater Analytical Results - October 2008**
**Comparison to Pennsyvania Non-Residential Non-Use Aquifer Groundwater MSCs**
**U.S. Steel - RCRA Groundwater Sampling**
**Fairless Hills, Pennsylvania**

| | CAS No | PADEP Non-Residentail Non-Use Aquifer GW MSC | Location ID / Sample ID / Sample Date / Lab Id | FB001_10-08 FB 10/14/2008 C8J160299012 | | | | FB002_10-08 FB 10/15/2008 C8J160299009 | | | | FB03_10-08 FB 10/16/2008 C8J180168010 | | | | FB04_10-08 FB 10/17/2008 C8J180168031 | | | | FB-05_10-08 C8J220361011 10/20/2008 C8J220361011 | | | | TB-01_10-08 TB 10/15/2008 C8J160299010 | | | | TB02_10-08 TB 10/17/2008 C8J180168032 | | | | TB-03 TB 10/20/2008 C8J220361012 | | | |
|---|---|---|---|---|---|---|---|---|---|---|---|---|---|---|---|---|---|---|---|---|---|---|---|---|---|---|---|---|---|---|---|---|---|---|---|
| ***RCRA APPENDIX IX SEMI-VOLATILE ORGANIC COMPOUNDS (Method 8270*** | | | | Result | DF | Q | RL | Result | DF | Q | RL | Result | DF | Q | RL | Result | DF | Q | RL | Result | DF | Q | RL | Result | DF | Q | RL | Result | DF | Q | RL | Result | DF | Q | RL |
| CHLOROBENZILATE | 510-15-6 | 9600 | ug/l | ND | 1.06 | | 1.1 | ND | 1.03 | | 1 | ND | 1.04 | | 1 | ND | 1.04 | | 1 | ND | 1.02 | | 1 | - | - | - | - | - | - | - | - | - | - | - | - |
| CHLOROPHENOLS | 58-90-2 | 61000 | ug/l | ND | 1.06 | | 1.1 | ND | 1.03 | | 1 | ND | 1.04 | | 1 | ND | 1.04 | | 1 | ND | 1.02 | | 1 | - | - | - | - | - | - | - | - | - | - | - | - |
| CHRYSENE | 218-01-9 | 1.9 | ug/l | ND | 1.06 | | 0.21 | ND | 1.03 | | 0.21 | ND | 1.04 | | 0.21 | ND | 1.04 | | 0.21 | ND | 1.02 | | 0.2 | - | - | - | - | - | - | - | - | - | - | - | - |
| CYGON | 60-51-5 | 20000 | ug/l | ND | 1.06 | | 1.1 | ND | 1.03 | | 1 | ND | 1.04 | | 1 | ND | 1.04 | | 1 | ND | 1.02 | | 1 | - | - | - | - | - | - | - | - | - | - | - | - |
| DIALLATE | 2303-16-4 | 1000 | ug/l | ND | 1.06 | | 1.1 | ND | 1.03 | | 1 | ND | 1.04 | | 1 | ND | 1.04 | | 1 | ND | 1.02 | | 1 | - | - | - | - | - | - | - | - | - | - | - | - |
| DIBENZO(A,H)ANTHRACENE | 53-70-3 | 0.6 | ug/l | ND | 1.06 | | 0.21 | ND | 1.03 | | 0.21 | ND | 1.04 | | 0.21 | ND | 1.04 | | 0.21 | ND | 1.02 | | 0.2 | - | - | - | - | - | - | - | - | - | - | - | - |
| DIBENZOFURAN | 132-64-9 | 5 | ug/l | 0.077 | 1.06 | J | 1.1 | ND | 1.03 | | 1 | ND | 1.04 | | 1 | ND | 1.04 | | 1 | ND | 1.02 | | 1 | - | - | - | - | - | - | - | - | - | - | - | - |
| DIETHYL PHTHALATE | 84-66-2 | 1100000 | ug/l | ND | 1.06 | | 1.1 | ND | 1.03 | | 1 | ND | 1.04 | | 1 | ND | 1.04 | | 1 | ND | 1.02 | | 1 | - | - | - | - | - | - | - | - | - | - | - | - |
| DIMETHYL PHTHALATE | 131-11-3 | 5 | ug/l | ND | 1.06 | | 1.1 | ND | 1.03 | | 1 | ND | 1.04 | | 1 | ND | 1.04 | | 1 | ND | 1.02 | | 1 | - | - | - | - | - | - | - | - | - | - | - | - |
| DI-N-BUTYL PHTHALATE | 84-74-2 | 400000 | ug/l | 0.23 | 1.06 | J | 1.1 | 0.069 | 1.03 | J | 1 | ND | 1.04 | | 1 | 0.072 | 1.04 | J | 1 | ND | 1.02 | | 1 | - | - | - | - | - | - | - | - | - | - | - | - |
| DINITROBUTYL PHENOL | 88-85-7 | 700 | ug/l | ND | 1.06 | | 1.1 | ND | 1.03 | | 1 | ND | 1.04 | | 1 | ND | 1.04 | | 1 | ND | 1.02 | | 1 | - | - | - | - | - | - | - | - | - | - | - | - |
| DI-N-OCTYL PHTHALATE | 117-84-0 | 3000 | ug/l | ND | 1.06 | | 1.1 | ND | 1.03 | | 1 | ND | 1.04 | | 1 | ND | 1.04 | | 1 | ND | 1.02 | | 1 | - | - | - | - | - | - | - | - | - | - | - | - |
| DISULFOTON | 298-04-4 | 30 | ug/l | ND | 1.06 | | 1.1 | ND | 1.03 | | 1 | ND | 1.04 | | 1 | ND | 1.04 | | 1 | ND | 1.02 | | 1 | - | - | - | - | - | - | - | - | - | - | - | - |
| ETHYL METHANESULFONATE | 62-50-0 | 5 | ug/l | ND | 1.06 | | 1.1 | ND | 1.03 | | 1 | ND | 1.04 | | 1 | ND | 1.04 | | 1 | ND | 1.02 | | 1 | - | - | - | - | - | - | - | - | - | - | - | - |
| ETHYL PARATHION (PARATHION) | 56-38-2 | 610 | ug/l | ND | 1.06 | | 1.1 | ND | 1.03 | | 1 | ND | 1.04 | | 1 | ND | 1.04 | | 1 | ND | 1.02 | | 1 | - | - | - | - | - | - | - | - | - | - | - | - |
| FAMPHUR | 52-85-7 | 5 | ug/l | ND | 1.06 | | ***11*** | ND | 1.03 | | ***10*** | ND | 1.04 | | ***10*** | ND | 1.04 | | ***10*** | ND | 1.02 | | ***10*** | - | - | - | - | - | - | - | - | - | - | - | - |
| FLUORANTHENE | 206-44-0 | 260 | ug/l | ND | 1.06 | | 0.21 | ND | 1.03 | | 0.21 | ND | 1.04 | | 0.21 | ND | 1.04 | | 0.21 | ND | 1.02 | | 0.2 | - | - | - | - | - | - | - | - | - | - | - | - |
| FLUORENE | 86-73-7 | 1900 | ug/l | 0.11 | 1.06 | J | 0.21 | ND | 1.03 | | 0.21 | ND | 1.04 | | 0.21 | ND | 1.04 | | 0.21 | ND | 1.02 | | 0.2 | - | - | - | - | - | - | - | - | - | - | - | - |
| HEXACHLORO-1,3-BUTADIENE | 87-68-3 | 1000 | ug/l | ND | 1.06 | | 0.21 | ND | 1.03 | | 0.21 | ND | 1.04 | | 0.21 | ND | 1.04 | | 0.21 | ND | 1.02 | | 0.2 | - | - | - | - | - | - | - | - | - | - | - | - |
| HEXACHLOROBENZENE | 118-74-1 | 6 | ug/l | ND | 1.06 | | 0.21 | ND | 1.03 | | 0.21 | ND | 1.04 | | 0.21 | ND | 1.04 | | 0.21 | ND | 1.02 | | 0.2 | - | - | - | - | - | - | - | - | - | - | - | - |
| HEXACHLOROCYCLOPENTADIENE | 77-47-4 | 1800 | ug/l | ND | 1.06 | | 1.1 | ND | 1.03 | | 1 | ND | 1.04 | | 1 | ND | 1.04 | | 1 | ND | 1.02 | | 1 | - | - | - | - | - | - | - | - | - | - | - | - |
| HEXACHLOROETHANE | 67-72-1 | 100 | ug/l | ND | 1.06 | | 1.1 | ND | 1.03 | | 1 | ND | 1.04 | | 1 | ND | 1.04 | | 1 | ND | 1.02 | | 1 | - | - | - | - | - | - | - | - | - | - | - | - |
| HEXACHLOROPHENE (HCP) | 70-30-4 | NS | ug/l | ND | - | | 0 | ND | - | | 0 | ND | 1.04 | | 0 | ND | 1.04 | | 0 | ND | 1.02 | | 0 | - | - | - | - | - | - | - | - | - | - | - | - |
| HEXACHLOROPROPENE | 1888-71-7 | 5 | ug/l | ND | 1.06 | | 1.1 | ND | 1.03 | | 1 | ND | 1.04 | | 1 | ND | 1.04 | | 1 | ND | 1.02 | | 1 | - | - | - | - | - | - | - | - | - | - | - | - |
| INDENO(1,2,3-CD)PYRENE | 193-39-5 | 62 | ug/l | ND | 1.06 | | 0.21 | ND | 1.03 | | 0.21 | ND | 1.04 | | 0.21 | ND | 1.04 | | 0.21 | ND | 1.02 | | 0.2 | - | - | - | - | - | - | - | - | - | - | - | - |
| ISODRIN | 465-73-6 | 5 | ug/l | ND | 1.06 | | 1.1 | ND | 1.03 | | 1 | ND | 1.04 | | 1 | ND | 1.04 | | 1 | ND | 1.02 | | 1 | - | - | - | - | - | - | - | - | - | - | - | - |
| ISOSAFROLE | 120-58-1 | 5 | ug/l | ND | 1.06 | | 1.1 | ND | 1.03 | | 1 | ND | 1.04 | | 1 | ND | 1.04 | | 1 | ND | 1.02 | | 1 | - | - | - | - | - | - | - | - | - | - | - | - |
| M-DICHLOROBENZENE | 541-73-1 | 60000 | ug/l | ND | 1.06 | | 0.21 | ND | 1.03 | | 0.21 | ND | 1.04 | | 0.21 | ND | 1.04 | | 0.21 | ND | 1.02 | | 0.2 | - | - | - | - | - | - | - | - | - | - | - | - |
| M-DINITROBENZENE | 99-65-0 | 1000 | ug/l | ND | 1.06 | | 1.1 | ND | 1.03 | | 1 | ND | 1.04 | | 1 | ND | 1.04 | | 1 | ND | 1.02 | | 1 | - | - | - | - | - | - | - | - | - | - | - | - |
| METHANAMINE, N-METHYL-N-NITROSO | 62-75-9 | 0.13 | ug/l | ND | 1.06 | | ***1.1*** | ND | 1.03 | | ***1*** | ND | 1.04 | | ***1*** | ND | 1.04 | | ***1*** | ND | 1.02 | | ***1*** | - | - | - | - | - | - | - | - | - | - | - | - |
| METHAPYRILENE | 91-80-5 | NS | ug/l | ND | 1.06 | | 1.1 | ND | 1.03 | | 1 | ND | 1.04 | | 1 | ND | 1.04 | | 1 | ND | 1.02 | | 1 | - | - | - | - | - | - | - | - | - | - | - | - |
| METHYL METHANESULFONATE | 66-27-3 | 26 | ug/l | ND | 1.06 | | 1.1 | ND | 1.03 | | 1 | ND | 1.04 | | 1 | ND | 1.04 | | 1 | ND | 1.02 | | 1 | - | - | - | - | - | - | - | - | - | - | - | - |
| METHYL PARATHION | 298-00-0 | 200 | ug/l | ND | 1.06 | | 1.1 | ND | 1.03 | | 1 | ND | 1.04 | | 1 | ND | 1.04 | | 1 | ND | 1.02 | | 1 | - | - | - | - | - | - | - | - | - | - | - | - |
| NAPHTHALENE | 91-20-3 | 30000 | ug/l | 0.054 | 1.06 | J | 0.21 | 0.047 | 1.03 | J | 0.21 | 0.05 | 1.04 | J | 0.21 | ND | 1.04 | | 0.21 | ND | 1.02 | | 0.2 | - | - | - | - | - | - | - | - | - | - | - | - |
| NITROBENZENE | 98-95-3 | 51000 | ug/l | ND | 1.06 | | 0.21 | ND | 1.03 | | 0.21 | ND | 1.04 | | 0.21 | ND | 1.04 | | 0.21 | ND | 1.02 | | 0.2 | - | - | - | - | - | - | - | - | - | - | - | - |
| N-NITROSODIETHYLAMINE | 55-18-5 | 0.043 | ug/l | ND | 1.06 | | ***1.1*** | ND | 1.03 | | ***1*** | ND | 1.04 | | ***1*** | ND | 1.04 | | ***1*** | ND | 1.02 | | ***1*** | - | - | - | - | - | - | - | - | - | - | - | - |
| N-NITROSODI-N-BUTYLAMINE | 924-16-3 | 11 | ug/l | ND | 1.06 | | 1.1 | ND | 1.03 | | 1 | ND | 1.04 | | 1 | ND | 1.04 | | 1 | ND | 1.02 | | 1 | - | - | - | - | - | - | - | - | - | - | - | - |
| N-NITROSODI-N-PROPYLAMINE | 621-64-7 | 370 | ug/l | ND | 1.06 | | 0.21 | ND | 1.03 | | 0.21 | ND | 1.04 | | 0.21 | ND | 1.04 | | 0.21 | ND | 1.02 | | 0.2 | - | - | - | - | - | - | - | - | - | - | - | - |
| N-NITROSODIPHENYLAMINE | 86-30-6 | 35000 | ug/l | ND | 1.06 | | 0.21 | ND | 1.03 | | 0.21 | ND | 1.04 | | 0.21 | ND | 1.04 | | 0.21 | ND | 1.02 | | 0.2 | - | - | - | - | - | - | - | - | - | - | - | - |
| N-NITROSOMETHYLETHYLAMINE | 10595-95-6 | NS | ug/l | ND | 1.06 | | 1.1 | ND | 1.03 | | 1 | ND | 1.04 | | 1 | ND | 1.04 | | 1 | ND | 1.02 | | 1 | - | - | - | - | - | - | - | - | - | - | - | - |
| N-NITROSOMORPHOLINE | 59-89-2 | NS | ug/l | ND | 1.06 | | 1.1 | ND | 1.03 | | 1 | ND | 1.04 | | 1 | ND | 1.04 | | 1 | ND | 1.02 | | 1 | - | - | - | - | - | - | - | - | - | - | - | - |
| N-NITROSOPIPERIDINE | 100-75-4 | NS | ug/l | ND | 1.06 | | 1.1 | ND | 1.03 | | 1 | ND | 1.04 | | 1 | ND | 1.04 | | 1 | ND | 1.02 | | 1 | - | - | - | - | - | - | - | - | - | - | - | - |
| N-NITROSOPYRROLIDINE | 930-55-2 | NS | ug/l | ND | 1.06 | | 1.1 | ND | 1.03 | | 1 | ND | 1.04 | | 1 | ND | 1.04 | | 1 | ND | 1.02 | | 1 | - | - | - | - | - | - | - | - | - | - | - | - |
| O,O,O-TRIETHYL PHOSPHOROTHIOATE | 126-68-1 | 5 | ug/l | ND | 1.06 | | 1.1 | ND | 1.03 | | 1 | ND | 1.04 | | 1 | ND | 1.04 | | 1 | ND | 1.02 | | 1 | - | - | - | - | - | - | - | - | - | - | - | - |
| O,O-DIETHYL O-PYRAZINYL PHOSPHOROTHIOATE | 297-97-2 | 5 | ug/l | ND | 1.06 | | 1.1 | ND | 1.03 | | 1 | ND | 1.04 | | 1 | ND | 1.04 | | 1 | ND | 1.02 | | 1 | - | - | - | - | - | - | - | - | - | - | - | - |
| O-TOLUIDINE | 95-53-4 | 11000 | ug/l | ND | 1.06 | | 1.1 | ND | 1.03 | | 1 | ND | 1.04 | | 1 | ND | 1.04 | | 1 | ND | 1.02 | | 1 | - | - | - | - | - | - | - | - | - | - | - | - |
| P-CHLOROANILINE | 106-47-8 | 410 | ug/l | ND | 1.06 | | 1.1 | ND | 1.03 | | 1 | ND | 1.04 | | 1 | ND | 1.04 | | 1 | ND | 1.02 | | 1 | - | - | - | - | - | - | - | - | - | - | - | - |
| PENTACHLOROBENZENE | 608-93-5 | 740 | ug/l | ND | 1.06 | | 1.1 | ND | 1.03 | | 1 | ND | 1.04 | | 1 | ND | 1.04 | | 1 | ND | 1.02 | | 1 | - | - | - | - | - | - | - | - | - | - | - | - |
| PENTACHLORONITROBENZENE | 82-68-8 | 440 | ug/l | ND | 1.06 | | 1.1 | ND | 1.03 | | 1 | ND | 1.04 | | 1 | ND | 1.04 | | 1 | ND | 1.02 | | 1 | - | - | - | - | - | - | - | - | - | - | - | - |
| PENTACHLOROPHENOL | 87-86-5 | 1000 | ug/l | ND | 1.06 | | 1.1 | ND | 1.03 | | 1 | ND | 1.04 | | 1 | ND | 1.04 | | 1 | ND | 1.02 | | 1 | - | - | - | - | - | - | - | - | - | - | - | - |
| PHENACETIN | 62-44-2 | 760000 | ug/l | ND | 1.06 | | 1.1 | ND | 1.03 | | 1 | ND | 1.04 | | 1 | ND | 1.04 | | 1 | ND | 1.02 | | 1 | - | - | - | - | - | - | - | - | - | - | - | - |
| PHENANTHRENE | 85-01-8 | 1100 | ug/l | 0.12 | 1.06 | JB | 0.21 | 0.07 | 1.03 | JB | 0.21 | 0.069 | 1.04 | JB | 0.21 | 0.062 | 1.04 | J | 0.21 | ND | 1.02 | | 0.2 | - | - | - | - | - | - | - | - | - | - | - | - |
| PHENOL | 108-95-2 | 400000 | ug/l | 0.053 | 1.06 | J | 0.21 | 0.18 | 1.03 | J | 0.21 | ND | 1.04 | | 0.21 | ND | 1.04 | | 0.21 | ND | 1.02 | | 0.2 | - | - | - | - | - | - | - | - | - | - | - | - |
| PHORATE | 298-02-2 | 4.1 | ug/l | ND | 1.06 | | 1.1 | ND | 1.03 | | 1 | ND | 1.04 | | 1 | ND | 1.04 | | 1 | ND | 1.02 | | 1 | - | - | - | - | - | - | - | - | - | - | - | - |
| P-NITROANILINE | 100-01-6 | 5.8 | ug/l | ND | 1.06 | | 5.3 | ND | 1.03 | | 5.2 | ND | 1.04 | | 5.2 | ND | 1.04 | | 5.2 | ND | 1.02 | | 5.1 | - | - | - | - | - | - | - | - | - | - | - | - |
| P-PHENYLENEDIAMINE | 106-50-3 | NS | ug/l | ND | 1.06 | | 42 | ND | 1.03 | | 41 | ND | 1.04 | | 42 | ND | 1.04 | | 42 | ND | 1.02 | | 41 | - | - | - | - | - | - | - | - | - | - | - | - |
| PROPYZAMIDE | 23950-58-5 | 50 | ug/l | ND | 1.06 | | 1.1 | ND | 1.03 | | 1 | ND | 1.04 | | 1 | ND | 1.04 | | 1 | ND | 1.02 | | 1 | - | - | - | - | - | - | - | - | - | - | - | - |
| PYRENE | 129-00-0 | 130 | ug/l | ND | 1.06 | | 0.21 | ND | 1.03 | | 0.21 | ND | 1.04 | | 0.21 | ND | 1.04 | | 0.21 | ND | 1.02 | | 0.2 | - | - | - | - | - | - | - | - | - | - | - | - |
| PYRIDINE | 110-86-1 | 200 | ug/l | ND | 1.06 | | 1.1 | ND | 1.03 | | 1 | ND | 1.04 | | 1 | ND | 1.04 | | 1 | ND | 1.02 | | 1 | - | - | - | - | - | - | - | - | - | - | - | - |
| SAFROLE | 94-59-7 | NS | ug/l | ND | 1.06 | | 1.1 | ND | 1.03 | | 1 | ND | 1.04 | | 1 | ND | 1.04 | | 1 | ND | 1.02 | | 1 | - | - | - | - | - | - | - | - | - | - | - | - |
| SULFOTEP | 3689-24-5 | 10 | ug/l | ND | 1.06 | | 1.1 | ND | 1.03 | | 1 | ND | 1.04 | | 1 | ND | 1.04 | | 1 | ND | 1.02 | | 1 | - | - | - | - | - | - | - | - | - | - | - | - |
| ***RCRA APPENDIX IX METALS - Dissolved (Method 6010/7471)*** | | | | Result | DF | Q | RL | Result | DF | Q | RL | Result | DF | Q | RL | Result | DF | Q | RL | Result | DF | Q | RL | Result | DF | Q | RL | Result | DF | Q | RL | Result | DF | Q | RL |
| ANTIMONY | 7440-36-0 | 6000 | ug/l | 0.1 | 1 | B | 2 | 0.11 | 1 | B | 2 | ND | 1 | | 2 | ND | 1 | | 2 | ND | 1 | | 2 | - | - | - | - | - | - | - | - | - | - | - | - |
| ARSENIC | 7440-38-2 | 50000 | ug/l | 0.48 | 1 | B J | 1 | 0.55 | 1 | B J | 1 | ND | 1 | | 1 | ND | 1 | | 1 | ND | 1 | | 1 | - | - | - | - | - | - | - | - | - | - | - | - |
| BARIUM | 7440-39-3 | 2000000 | ug/l | 0.11 | 1 | B | 10 | ND | 1 | | 10 | ND | 1 | | 10 | ND | 1 | | 10 | 14.3 | 1 | | 10 | - | - | - | - | - | - | - | - | - | - | - | - |
| BERYLLIUM | 7440-41-7 | 4000 | ug/l | ND | 1 | | 1 | ND | 1 | | 1 | ND | 1 | | 1 | ND | 1 | | 1 | ND | 1 | | 1 | - | - | - | - | - | - | - | - | - | - | - | - |
| CADMIUM | 7440-43-9 | 5000 | ug/l | ND | 1 | | 1 | 0.16 | 1 | B | 1 | ND | 1 | | 1 | 0.13 | 1 | B | 1 | ND | 1 | | 1 | - | - | - | - | - | - | - | - | - | - | - | - |
| CHROMIUM | 7440-47-3 | 100000 | ug/l | 3.8 | 1 | J | 2 | 4.4 | 1 | J | 2 | 3.1 | 1 | J | 2 | 2.9 | 1 | J | 2 | 4 | 1 | J | 2 | - | - | - | - | - | - | - | - | - | - | - | - |
| COBALT | 7440-48-4 | 2000000 | ug/l | ND | 1 | | 0.5 | ND | 1 | | 0.5 | ND | 1 | | 0.5 | ND | 1 | | 0.5 | 0.096 | 1 | B | 0.5 | - | - | - | - | - | - | - | - | - | - | - | - |
| COPPER | 7440-50-8 | 1000000 | ug/l | 0.44 | 1 | B | 2 | 1.1 | 1 | B | 2 | 0.62 | 1 | B | 2 | 0.79 | 1 | B | 2 | 1.2 | 1 | B | 2 | - | - | - | - | - | - | - | - | - | - | - | - |
| LEAD | 7439-92-1 | 5000 | ug/l | ND | 1 | | 1 | 0.3 | 1 | B | 1 | 0.23 | 1 | B | 1 | 0.26 | 1 | B | 1 | ND | 1 | | 1 | - | - | - | - | - | - | - | - | - | - | - | - |
| MERCURY | 7439-97-6 | 2000 | ug/l | 0.022 | 1 | B J | 0.2 | 0.037 | 1 | B J | 0.2 | 0.038 | 1 | B J | 0.2 | 0.051 | 1 | B J | 0.2 | ND | 1 | | 0.2 | - | - | - | - | - | - | - | - | - | - | - | - |
| NICKEL | 7440-02-0 | 100000 | ug/l | 0.099 | 1 | B | 1 | 0.11 | 1 | B | 1 | ND | 1 | | 1 | 0.092 | 1 | B | 1 | 1 | 1 | | 1 | - | - | - | - | - | - | - | - | - | - | - | - |
| SELENIUM | 7782-49-2 | 50000 | ug/l | 1.5 | 1 | B J | 5 | 1.6 | 1 | B J | 5 | ND | 1 | | 5 | 0.76 | 1 | B | 5 | 0.57 | 1 | B | 5 | - | - | - | - | - | - | - | - | - | - | - | - |
| SILVER | 7440-22-4 | 100000 | ug/l | ND | 1 | | 1 | ND | 1 | | 1 | ND | 1 | | 1 | ND | 1 | | 1 | ND | 1 | | 1 | - | - | - | - | - | - | - | - | - | - | - | - |
| THALLIUM | 7440-28-0 | 2000 | ug/l | ND | 1 | | 1 | ND | 1 | | 1 | ND | 1 | | 1 | ND | 1 | | 1 | 0.024 | 1 | B | 1 | - | - | - | - | - | - | - | - | - | - | - | - |
| TIN | 7440-31-5 | 61000000 | ug/l | 3.8 | 1 | B J | 5 | 3.8 | 1 | B J | 5 | 3.1 | 1 | B J | 5 | 4.4 | 1 | B J | 5 | 3.6 | 1 | B J | 5 | - | - | - | - | - | - | - | - | - | - | - | - |
| VANADIUM (FUME OR DUST) | 7440-62-2 | 720000 | ug/l | ND | 1 | | 1 | ND | 1 | | 1 | ND | 1 | | 1 | ND | 1 | | 1 | 0.34 | 1 | B | 1 | - | - | - | - | - | - | - | - | - | - | - | - |
| ZINC | 7440-66-6 | 2000000 | ug/l | 2.3 | 1 | B | 5 | 3.7 | 1 | B | 5 | 3.4 | 1 | B | 5 | 4.2 | 1 | B | 5 | 4.5 | 1 | B J | 5 | - | - | - | - | - | - | - | - | - | - | - | - |

**Notes:**
ND - Non-Detected
B - Method Blank contamination. The associated method blank contains the target analyte at a reportable level.
J - Estimated result. Result is less than RL.
1.) HEXACHLOROPHENE (HCP) was reported as TIC.

Legend:
**1** Concentration exceeds the PADEP Non-Residential Non-Use Aquifer Groundwater MSC
***2.6*** Reporting limit exceeds the PADEP Non-Residential Non-Use Aquifer Groundwater MSC

**Table 6**
**Summary of Groundwater Analytical Results - June 2009**
**Comparison to Pennsylvania Non-Residential Non-Use Aquifer Groundwater MSCs**
**U.S. Steel - RCRA Groundwater Sampling**
**Fairless Hills, Pennsylvania**

| | CAS No | PADEP Non-Residential Non-Use Aquifer GW MSC | Location ID | MW1-02-31 | | | | MW1-12-29 | | | | MW1-15-29 | | | | MW1-23-47 | | | | MW1-26-27 | | | | MW1-28-74 | | | | MW2-01-22 | | | |
|---|---|---|---|---|---|---|---|---|---|---|---|---|---|---|---|---|---|---|---|---|---|---|---|---|---|---|---|---|---|---|---|
| | | | Sample ID | MW1-02-31_061809 | | | | MW1-12-29_061809 | | | | MW1-15-29_061909 | | | | MW1-23-47_061909 | | | | MW1-26-27_061709 | | | | MW1-28-74_061809 | | | | MW2-01-22_061809 | | | |
| | | | Sample Date | 6/18/2009 | | | | 6/18/2009 | | | | 6/19/2009 | | | | 6/19/2009 | | | | 6/17/2009 | | | | 6/18/2009 | | | | 6/18/2009 | | | |
| | | | Lab Id | C9F190331006 | | | | C9F190331004 | | | | C9F200181009 | | | | C9F200181001 | | | | C9F180195003 | | | | C9F190331012 | | | | C9F190331013 | | | |
| ***RCRA APPENDIX IX VOLATILE ORGANIC COMPOUNDS (Method 8260)*** | | | | Result | DF | Q | RL | Result | DF | Q | RL | Result | DF | Q | RL | Result | DF | Q | RL | Result | DF | Q | RL | Result | DF | Q | RL | Result | DF | Q | RL |
| Acetone | 67-64-1 | 100000 | ug/l | ND | 1 | | 5 | ND | 1 | | 5 | 4.7 | 1 | J | 5 | ND | 1 | | 5 | 3.1 | 1 | J | 5 | ND | 1 | | 5 | ND | 1 | | 5 |
| Acetonitrile | 75-05-8 | 3500 | ug/l | ND | 1 | | 20 | ND | 1 | | 20 | ND | 1 | | 20 | ND | 1 | | 20 | ND | 1 | | 20 | ND | 1 | | 20 | ND | 1 | | 20 |
| Acrolein | 107-02-8 | 1.2 | ug/l | ND | 1 | | ***20*** | ND | 1 | | ***20*** | ND | 1 | | ***20*** | ND | 1 | | ***20*** | ND | 1 | | ***20*** | ND | 1 | | ***20*** | ND | 1 | | ***20*** |
| Acrylonitrile | 107-13-1 | 270 | ug/l | ND | 1 | | 20 | ND | 1 | | 20 | ND | 1 | | 20 | ND | 1 | | 20 | ND | 1 | | 20 | ND | 1 | | 20 | ND | 1 | | 20 |
| Benzene | 71-43-2 | 500 | ug/l | ND | 1 | | 1 | ND | 1 | | 1 | ND | 1 | | 1 | ND | 1 | | 1 | ND | 1 | | 1 | ND | 1 | | 1 | ND | 1 | | 1 |
| Bromodichloromethane | 75-27-4 | 100 | ug/l | ND | 1 | | 1 | ND | 1 | | 1 | ND | 1 | | 1 | ND | 1 | | 1 | ND | 1 | | 1 | ND | 1 | | 1 | ND | 1 | | 1 |
| Bromoform | 75-25-2 | 10000 | ug/l | ND | 1 | | 1 | ND | 1 | | 1 | ND | 1 | | 1 | ND | 1 | | 1 | ND | 1 | | 1 | ND | 1 | | 1 | ND | 1 | | 1 |
| Bromomethane | 74-83-9 | 1000 | ug/l | ND | 1 | | 1 | ND | 1 | | 1 | ND | 1 | | 1 | ND | 1 | | 1 | ND | 1 | | 1 | ND | 1 | | 1 | ND | 1 | | 1 |
| 2-Butanone | 78-93-3 | 580000 | ug/l | ND | 1 | | 5 | ND | 1 | | 5 | ND | 1 | | 5 | ND | 1 | | 5 | ND | 1 | | 5 | ND | 1 | | 5 | ND | 1 | | 5 |
| Carbon Disulfide | 75-15-0 | 4100 | ug/l | ND | 1 | | 1 | ND | 1 | | 1 | ND | 1 | | 1 | ND | 1 | | 1 | ND | 1 | | 1 | ND | 1 | | 1 | ND | 1 | | 1 |
| Carbon Tetrachloride | 56-23-5 | 50 | ug/l | ND | 1 | | 1 | ND | 1 | | 1 | ND | 1 | | 1 | ND | 1 | | 1 | ND | 1 | | 1 | ND | 1 | | 1 | ND | 1 | | 1 |
| 3-Chloro-1-propene (Allyl chloride) | 107-05-1 | 580 | ug/l | ND | 1 | | 1 | ND | 1 | | 1 | ND | 1 | | 1 | ND | 1 | | 1 | ND | 1 | | 1 | ND | 1 | | 1 | ND | 1 | | 1 |
| Chlorobenzene | 108-90-7 | 10000 | ug/l | ND | 1 | | 1 | ND | 1 | | 1 | ND | 1 | | 1 | ND | 1 | | 1 | ND | 1 | | 1 | ND | 1 | | 1 | ND | 1 | | 1 |
| Chloroethane | 75-00-3 | 90000 | ug/l | ND | 1 | | 1 | ND | 1 | | 1 | ND | 1 | | 1 | ND | 1 | | 1 | ND | 1 | | 1 | ND | 1 | | 1 | ND | 1 | | 1 |
| Chloroform | 67-66-3 | 1000 | ug/l | ND | 1 | | 1 | ND | 1 | | 1 | ND | 1 | | 1 | ND | 1 | | 1 | ND | 1 | | 1 | ND | 1 | | 1 | ND | 1 | | 1 |
| Chloromethane | 74-87-3 | 300 | ug/l | ND | 1 | | 1 | ND | 1 | | 1 | ND | 1 | | 1 | ND | 1 | | 1 | ND | 1 | | 1 | ND | 1 | | 1 | ND | 1 | | 1 |
| Chloroprene | 126-99-8 | 4100 | ug/l | ND | 1 | | 1 | ND | 1 | | 1 | ND | 1 | | 1 | ND | 1 | | 1 | ND | 1 | | 1 | ND | 1 | | 1 | ND | 1 | | 1 |
| 1,2-Dibromethane | 106-93-4 | 5 | ug/l | ND | 1 | | 1 | ND | 1 | | 1 | ND | 1 | | 1 | ND | 1 | | 1 | ND | 1 | | 1 | ND | 1 | | 1 | ND | 1 | | 1 |
| 1,2-Dibromo-3-chloropropane | 96-12-8 | 20 | ug/l | ND | 1 | | 1 | ND | 1 | | 1 | ND | 1 | | 1 | ND | 1 | | 1 | ND | 1 | | 1 | ND | 1 | | 1 | ND | 1 | | 1 |
| Dibromochloromethane | 124-48-1 | 10000 | ug/l | ND | 1 | | 1 | ND | 1 | | 1 | ND | 1 | | 1 | ND | 1 | | 1 | ND | 1 | | 1 | ND | 1 | | 1 | ND | 1 | | 1 |
| Dibromomethane | 74-95-3 | 20000 | ug/l | ND | 1 | | 1 | ND | 1 | | 1 | ND | 1 | | 1 | ND | 1 | | 1 | ND | 1 | | 1 | ND | 1 | | 1 | ND | 1 | | 1 |
| trans-1,4-Dichloro-2-butene | 110-57-6 | 5 | ug/l | ND | 1 | | 1 | ND | 1 | | 1 | ND | 1 | | 1 | ND | 1 | | 1 | ND | 1 | | 1 | ND | 1 | | 1 | ND | 1 | | 1 |
| Dichlorodifluoromethane | 75-71-8 | 100000 | ug/l | ND | 1 | | 1 | ND | 1 | | 1 | ND | 1 | | 1 | ND | 1 | | 1 | ND | 1 | | 1 | ND | 1 | | 1 | ND | 1 | | 1 |
| 1,1-Dichloroethane | 75-34-3 | 1100 | ug/l | 0.23 | 1 | J | 1 | ND | 1 | | 1 | ND | 1 | | 1 | ND | 1 | | 1 | ND | 1 | | 1 | ND | 1 | | 1 | ND | 1 | | 1 |
| 1,2-Dichloroethane | 107-06-2 | 50 | ug/l | ND | 1 | | 1 | ND | 1 | | 1 | ND | 1 | | 1 | ND | 1 | | 1 | ND | 1 | | 1 | ND | 1 | | 1 | ND | 1 | | 1 |
| trans-1,2-Dichloroethene | 156-60-5 | 1000 | ug/l | ND | 1 | | 1 | ND | 1 | | 1 | ND | 1 | | 1 | ND | 1 | | 1 | ND | 1 | | 1 | ND | 1 | | 1 | ND | 1 | | 1 |
| 1,1-Dichloroethene | 75-35-4 | 70 | ug/l | ND | 1 | | 1 | ND | 1 | | 1 | ND | 1 | | 1 | ND | 1 | | 1 | ND | 1 | | 1 | ND | 1 | | 1 | ND | 1 | | 1 |
| 1,2-Dichloropropane | 78-87-5 | 50 | ug/l | ND | 1 | | 1 | ND | 1 | | 1 | ND | 1 | | 1 | ND | 1 | | 1 | ND | 1 | | 1 | ND | 1 | | 1 | ND | 1 | | 1 |
| trans-1,3-Dichloropropene | 10061-02-6 | NS | ug/l | ND | 1 | | 1 | ND | 1 | | 1 | ND | 1 | | 1 | ND | 1 | | 1 | ND | 1 | | 1 | ND | 1 | | 1 | ND | 1 | | 1 |
| cis-1,3-Dichloropropene | 10061-01-5 | NS | ug/l | ND | 1 | | 1 | ND | 1 | | 1 | ND | 1 | | 1 | ND | 1 | | 1 | ND | 1 | | 1 | ND | 1 | | 1 | ND | 1 | | 1 |
| 1,4-Dioxane | 123-91-1 | 240 | ug/l | ND | 1 | | 200 | ND | 1 | | 200 | ND | 1 | | 200 | ND | 1 | | 200 | ND | 1 | | 200 | ND | 1 | | 200 | ND | 1 | | 200 |
| Ethyl methacrylate | 97-63-2 | 1800 | ug/l | ND | 1 | | 1 | ND | 1 | | 1 | ND | 1 | | 1 | ND | 1 | | 1 | ND | 1 | | 1 | ND | 1 | | 1 | ND | 1 | | 1 |
| Ethylbenzene | 100-41-4 | 70000 | ug/l | ND | 1 | | 1 | ND | 1 | | 1 | ND | 1 | | 1 | ND | 1 | | 1 | ND | 1 | | 1 | ND | 1 | | 1 | ND | 1 | | 1 |
| 2-Hexanone | 591-78-6 | 5 | ug/l | ND | 1 | | 5 | ND | 1 | | 5 | ND | 1 | | 5 | ND | 1 | | 5 | ND | 1 | | 5 | ND | 1 | | 5 | ND | 1 | | 5 |
| Iodomethane | 74-88-43 | 5 | ug/l | ND | 1 | | 1 | ND | 1 | | 1 | ND | 1 | | 1 | ND | 1 | | 1 | ND | 1 | | 1 | ND | 1 | | 1 | ND | 1 | | 1 |
| Isobutyl alcohol | 78-83-1 | 610000 | ug/l | ND | 1 | | 40 | ND | 1 | | 40 | ND | 1 | | 40 | ND | 1 | | 40 | ND | 1 | | 40 | ND | 1 | | 40 | ND | 1 | | 40 |
| Methacrylonitrile | 126-98-7 | 4.1 | ug/l | ND | 1 | | 1 | ND | 1 | | 1 | ND | 1 | | 1 | ND | 1 | | 1 | ND | 1 | | 1 | ND | 1 | | 1 | ND | 1 | | 1 |
| Methyl methacrylate | 80-62-6 | 410000 | ug/l | ND | 1 | | 1 | ND | 1 | | 1 | ND | 1 | | 1 | ND | 1 | | 1 | ND | 1 | | 1 | ND | 1 | | 1 | ND | 1 | | 1 |
| 4-Methyl-2-pentanone | 108-10-1 | 41000 | ug/l | ND | 1 | | 5 | ND | 1 | | 5 | ND | 1 | | 5 | ND | 1 | | 5 | ND | 1 | | 5 | ND | 1 | | 5 | ND | 1 | | 5 |
| Methylene chloride | 75-09-2 | 500 | ug/l | ND | 1 | | 1 | ND | 1 | | 1 | ND | 1 | | 1 | ND | 1 | | 1 | ND | 1 | | 1 | ND | 1 | | 1 | ND | 1 | | 1 |
| Propionitrile | 107-12-0 | 5 | ug/l | ND | 1 | | 2 | ND | 1 | | 2 | ND | 1 | | 2 | ND | 1 | | 2 | ND | 1 | | 2 | ND | 1 | | 2 | ND | 1 | | 2 |
| Styrene | 100-42-5 | 10000 | ug/l | ND | 1 | | 1 | ND | 1 | | 1 | ND | 1 | | 1 | ND | 1 | | 1 | ND | 1 | | 1 | ND | 1 | | 1 | ND | 1 | | 1 |
| 1,1,1,2-Tetracholorethane | 630-20-6 | 7000 | ug/l | ND | 1 | | 1 | ND | 1 | | 1 | ND | 1 | | 1 | ND | 1 | | 1 | ND | 1 | | 1 | ND | 1 | | 1 | ND | 1 | | 1 |
| 1,1,2,2-Tetrachloroethane | 79-34-5 | 30 | ug/l | ND | 1 | | 1 | ND | 1 | | 1 | ND | 1 | | 1 | ND | 1 | | 1 | ND | 1 | | 1 | ND | 1 | | 1 | ND | 1 | | 1 |
| Tetrachloroethene | 127-18-4 | 50 | ug/l | ND | 1 | | 1 | ND | 1 | | 1 | ND | 1 | | 1 | ND | 1 | | 1 | ND | 1 | | 1 | ND | 1 | | 1 | ND | 1 | | 1 |
| Toluene | 108-88-3 | 100000 | ug/l | ND | 1 | | 1 | ND | 1 | | 1 | ND | 1 | | 1 | ND | 1 | | 1 | ND | 1 | | 1 | ND | 1 | | 1 | ND | 1 | | 1 |
| Total Xylene | 1330-20-7 | 180000 | ug/l | ND | 1 | | 3 | ND | 1 | | 3 | ND | 1 | | 3 | ND | 1 | | 3 | ND | 1 | | 3 | ND | 1 | | 3 | ND | 1 | | 3 |
| 1,1,1-Trichloroethane | 71-55-6 | 2000 | ug/l | ND | 1 | | 1 | ND | 1 | | 1 | ND | 1 | | 1 | ND | 1 | | 1 | ND | 1 | | 1 | ND | 1 | | 1 | ND | 1 | | 1 |
| 1,1,2-Trichloroethane | 79-00-5 | 50 | ug/l | ND | 1 | | 1 | ND | 1 | | 1 | ND | 1 | | 1 | ND | 1 | | 1 | ND | 1 | | 1 | ND | 1 | | 1 | ND | 1 | | 1 |
| Trichloroethene | 79-01-6 | 50 | ug/l | ND | 1 | | 1 | ND | 1 | | 1 | ND | 1 | | 1 | ND | 1 | | 1 | ND | 1 | | 1 | ND | 1 | | 1 | ND | 1 | | 1 |
| Trichlorofluoromethane | 75-69-4 | 200000 | ug/l | ND | 1 | | 1 | ND | 1 | | 1 | ND | 1 | | 1 | ND | 1 | | 1 | ND | 1 | | 1 | ND | 1 | | 1 | ND | 1 | | 1 |
| 1,2,3-Trichloropropane | 96-18-4 | 4000 | ug/l | ND | 1 | | 1 | ND | 1 | | 1 | ND | 1 | | 1 | ND | 1 | | 1 | ND | 1 | | 1 | ND | 1 | | 1 | ND | 1 | | 1 |
| Vinyl acetate | 108-05-4 | 1200 | ug/l | ND | 1 | | 1 | ND | 1 | | 1 | ND | 1 | | 1 | ND | 1 | | 1 | ND | 1 | | 1 | ND | 1 | | 1 | ND | 1 | | 1 |
| Vinyl chloride | 75-01-4 | 20 | ug/l | ND | 1 | | 1 | ND | 1 | | 1 | ND | 1 | | 1 | ND | 1 | | 1 | ND | 1 | | 1 | ND | 1 | | 1 | ND | 1 | | 1 |
| m-Xylene & p-Xylene | #N/A | NS | ug/l | ND | 1 | | 2 | ND | 1 | | 2 | ND | 1 | | 2 | ND | 1 | | 2 | ND | 1 | | 2 | ND | 1 | | 2 | ND | 1 | | 2 |
| o-Xylene | 95-47-6 | NS | ug/l | ND | 1 | | 1 | ND | 1 | | 1 | ND | 1 | | 1 | ND | 1 | | 1 | ND | 1 | | 1 | ND | 1 | | 1 | ND | 1 | | 1 |

**Table 6**
**Summary of Groundwater Analytical Results - June 2009**
**Comparison to Pennsylvania Non-Residential Non-Use Aquifer Groundwater MSCs**
**U.S. Steel - RCRA Groundwater Sampling**
**Fairless Hills, Pennsylvania**

| | CAS No | PADEP Non-Residential Non-Use Aquifer GW MSC | Location ID | MW2-03-33 | | | | MW3-02-27 | | | | MW3-02-27 | | | | MW3-12-31 | | | | MW3-29-29 | | | | MW4-02-24 | | | | MW4-10-23 | | | | MW4-11-33 | | | |
|---|---|---|---|---|---|---|---|---|---|---|---|---|---|---|---|---|---|---|---|---|---|---|---|---|---|---|---|---|---|---|---|---|---|---|---|
| | | | Sample ID | MW2-03-33_061909 | | | | MW3-02-27_061809 | | | | DUP-01_061809 | | | | MW3-12-31_061909 | | | | MW3-29-29_061809 | | | | MW4-02-24_061809 | | | | MW4-10-23_061709 | | | | MW4-11-33_061909 | | | |
| | | | Sample Date | 6/19/2009 | | | | 6/18/2009 | | | | 6/18/2009 | | | | 6/19/2009 | | | | 6/18/2009 | | | | 6/18/2009 | | | | 6/17/2009 | | | | 6/19/2009 | | | |
| | | | Lab Id | C9F200181010 | | | | C9F190331001 | | | | C9F190331002 | | | | C9F200181002 | | | | C9F190331003 | | | | C9F190331014 | | | | C9F180195004 | | | | C9F200181003 | | | |
| ***RCRA APPENDIX IX VOLATILE ORGANIC COMPOUNDS (Method 8260)*** | | | | Result | DF | Q | RL | Result | DF | Q | RL | Result | DF | Q | RL | Result | DF | Q | RL | Result | DF | Q | RL | Result | DF | Q | RL | Result | DF | Q | RL | Result | DF | Q | RL |
| Acetone | 67-64-1 | 100000 | ug/l | ND | 1 | | 5 | ND | 1 | | 5 | ND | 1 | | 5 | ND | 1 | | 5 | ND | 1 | | 5 | ND | 1 | | 5 | ND | 1 | | 5 | ND | 1 | | 5 |
| Acetonitrile | 75-05-8 | 3500 | ug/l | ND | 1 | | 20 | ND | 1 | | 20 | ND | 1 | | 20 | ND | 1 | | 20 | ND | 1 | | 20 | ND | 1 | | 20 | ND | 1 | | 20 | ND | 1 | | 20 |
| Acrolein | 107-02-8 | 1.2 | ug/l | ND | 1 | | ***20*** | ND | 1 | | ***20*** | ND | 1 | | ***20*** | ND | 1 | | ***20*** | ND | 1 | | ***20*** | ND | 1 | | ***20*** | ND | 1 | | ***20*** | ND | 1 | | ***20*** |
| Acrylonitrile | 107-13-1 | 270 | ug/l | ND | 1 | | 20 | ND | 1 | | 20 | ND | 1 | | 20 | ND | 1 | | 20 | ND | 1 | | 20 | ND | 1 | | 20 | ND | 1 | | 20 | ND | 1 | | 20 |
| Benzene | 71-43-2 | 500 | ug/l | ND | 1 | | 1 | 0.13 | 1 | J | 1 | 0.12 | 1 | J | 1 | 0.15 | 1 | J | 1 | ND | 1 | | 1 | ND | 1 | | 1 | ND | 1 | | 1 | ND | 1 | | 1 |
| Bromodichloromethane | 75-27-4 | 100 | ug/l | ND | 1 | | 1 | ND | 1 | | 1 | ND | 1 | | 1 | ND | 1 | | 1 | ND | 1 | | 1 | ND | 1 | | 1 | ND | 1 | | 1 | ND | 1 | | 1 |
| Bromoform | 75-25-2 | 10000 | ug/l | ND | 1 | | 1 | ND | 1 | | 1 | ND | 1 | | 1 | ND | 1 | | 1 | ND | 1 | | 1 | ND | 1 | | 1 | ND | 1 | | 1 | ND | 1 | | 1 |
| Bromomethane | 74-83-9 | 1000 | ug/l | ND | 1 | | 1 | ND | 1 | | 1 | ND | 1 | | 1 | ND | 1 | | 1 | ND | 1 | | 1 | ND | 1 | | 1 | ND | 1 | | 1 | ND | 1 | | 1 |
| 2-Butanone | 78-93-3 | 580000 | ug/l | ND | 1 | | 5 | ND | 1 | | 5 | ND | 1 | | 5 | ND | 1 | | 5 | ND | 1 | | 5 | ND | 1 | | 5 | ND | 1 | | 5 | ND | 1 | | 5 |
| Carbon Disulfide | 75-15-0 | 4100 | ug/l | ND | 1 | | 1 | ND | 1 | | 1 | ND | 1 | | 1 | ND | 1 | | 1 | ND | 1 | | 1 | ND | 1 | | 1 | ND | 1 | | 1 | ND | 1 | | 1 |
| Carbon Tetrachloride | 56-23-5 | 50 | ug/l | ND | 1 | | 1 | ND | 1 | | 1 | ND | 1 | | 1 | ND | 1 | | 1 | ND | 1 | | 1 | ND | 1 | | 1 | ND | 1 | | 1 | ND | 1 | | 1 |
| 3-Chloro-1-propene (Allyl chloride) | 107-05-1 | 580 | ug/l | ND | 1 | | 1 | ND | 1 | | 1 | ND | 1 | | 1 | ND | 1 | | 1 | ND | 1 | | 1 | ND | 1 | | 1 | ND | 1 | | 1 | ND | 1 | | 1 |
| Chlorobenzene | 108-90-7 | 10000 | ug/l | ND | 1 | | 1 | ND | 1 | | 1 | ND | 1 | | 1 | ND | 1 | | 1 | ND | 1 | | 1 | ND | 1 | | 1 | ND | 1 | | 1 | ND | 1 | | 1 |
| Chloroethane | 75-00-3 | 90000 | ug/l | ND | 1 | | 1 | ND | 1 | | 1 | ND | 1 | | 1 | ND | 1 | | 1 | ND | 1 | | 1 | ND | 1 | | 1 | ND | 1 | | 1 | ND | 1 | | 1 |
| Chloroform | 67-66-3 | 1000 | ug/l | ND | 1 | | 1 | ND | 1 | | 1 | ND | 1 | | 1 | ND | 1 | | 1 | ND | 1 | | 1 | ND | 1 | | 1 | ND | 1 | | 1 | ND | 1 | | 1 |
| Chloromethane | 74-87-3 | 300 | ug/l | ND | 1 | | 1 | ND | 1 | | 1 | ND | 1 | | 1 | ND | 1 | | 1 | ND | 1 | | 1 | ND | 1 | | 1 | ND | 1 | | 1 | ND | 1 | | 1 |
| Chloroprene | 126-99-8 | 4100 | ug/l | ND | 1 | | 1 | ND | 1 | | 1 | ND | 1 | | 1 | ND | 1 | | 1 | ND | 1 | | 1 | ND | 1 | | 1 | ND | 1 | | 1 | ND | 1 | | 1 |
| 1,2-Dibromethane | 106-93-4 | 5 | ug/l | ND | 1 | | 1 | ND | 1 | | 1 | ND | 1 | | 1 | ND | 1 | | 1 | ND | 1 | | 1 | ND | 1 | | 1 | ND | 1 | | 1 | ND | 1 | | 1 |
| 1,2-Dibromo-3-chloropropane | 96-12-8 | 20 | ug/l | ND | 1 | | 1 | ND | 1 | | 1 | ND | 1 | | 1 | ND | 1 | | 1 | ND | 1 | | 1 | ND | 1 | | 1 | ND | 1 | | 1 | ND | 1 | | 1 |
| Dibromochloromethane | 124-48-1 | 10000 | ug/l | ND | 1 | | 1 | ND | 1 | | 1 | ND | 1 | | 1 | ND | 1 | | 1 | ND | 1 | | 1 | ND | 1 | | 1 | ND | 1 | | 1 | ND | 1 | | 1 |
| Dibromomethane | 74-95-3 | 20000 | ug/l | ND | 1 | | 1 | ND | 1 | | 1 | ND | 1 | | 1 | ND | 1 | | 1 | ND | 1 | | 1 | ND | 1 | | 1 | ND | 1 | | 1 | ND | 1 | | 1 |
| trans-1,4-Dichloro-2-butene | 110-57-6 | 5 | ug/l | ND | 1 | | 1 | ND | 1 | | 1 | ND | 1 | | 1 | ND | 1 | | 1 | ND | 1 | | 1 | ND | 1 | | 1 | ND | 1 | | 1 | ND | 1 | | 1 |
| Dichlorodifluoromethane | 75-71-8 | 100000 | ug/l | ND | 1 | | 1 | ND | 1 | | 1 | ND | 1 | | 1 | ND | 1 | | 1 | ND | 1 | | 1 | ND | 1 | | 1 | ND | 1 | | 1 | ND | 1 | | 1 |
| 1,1-Dichloroethane | 75-34-3 | 1100 | ug/l | ND | 1 | | 1 | ND | 1 | | 1 | ND | 1 | | 1 | ND | 1 | | 1 | ND | 1 | | 1 | ND | 1 | | 1 | ND | 1 | | 1 | 0.7 | 1 | J | 1 |
| 1,2-Dichloroethane | 107-06-2 | 50 | ug/l | ND | 1 | | 1 | ND | 1 | | 1 | ND | 1 | | 1 | ND | 1 | | 1 | ND | 1 | | 1 | ND | 1 | | 1 | ND | 1 | | 1 | ND | 1 | | 1 |
| trans-1,2-Dichloroethene | 156-60-5 | 1000 | ug/l | ND | 1 | | 1 | ND | 1 | | 1 | ND | 1 | | 1 | ND | 1 | | 1 | ND | 1 | | 1 | ND | 1 | | 1 | ND | 1 | | 1 | ND | 1 | | 1 |
| 1,1-Dichloroethene | 75-35-4 | 70 | ug/l | ND | 1 | | 1 | ND | 1 | | 1 | ND | 1 | | 1 | ND | 1 | | 1 | ND | 1 | | 1 | ND | 1 | | 1 | ND | 1 | | 1 | ND | 1 | | 1 |
| 1,2-Dichloropropane | 78-87-5 | 50 | ug/l | ND | 1 | | 1 | ND | 1 | | 1 | ND | 1 | | 1 | ND | 1 | | 1 | ND | 1 | | 1 | ND | 1 | | 1 | ND | 1 | | 1 | ND | 1 | | 1 |
| trans-1,3-Dichloropropene | 10061-02-6 | NS | ug/l | ND | 1 | | 1 | ND | 1 | | 1 | ND | 1 | | 1 | ND | 1 | | 1 | ND | 1 | | 1 | ND | 1 | | 1 | ND | 1 | | 1 | ND | 1 | | 1 |
| cis-1,3-Dichloropropene | 10061-01-5 | NS | ug/l | ND | 1 | | 1 | ND | 1 | | 1 | ND | 1 | | 1 | ND | 1 | | 1 | ND | 1 | | 1 | ND | 1 | | 1 | ND | 1 | | 1 | ND | 1 | | 1 |
| 1,4-Dioxane | 123-91-1 | 240 | ug/l | ND | 1 | | 200 | ND | 1 | | 200 | ND | 1 | | 200 | ND | 1 | | 200 | ND | 1 | | 200 | ND | 1 | | 200 | ND | 1 | | 200 | ND | 1 | | 200 |
| Ethyl methacrylate | 97-63-2 | 1800 | ug/l | ND | 1 | | 1 | ND | 1 | | 1 | ND | 1 | | 1 | ND | 1 | | 1 | ND | 1 | | 1 | ND | 1 | | 1 | ND | 1 | | 1 | ND | 1 | | 1 |
| Ethylbenzene | 100-41-4 | 70000 | ug/l | ND | 1 | | 1 | ND | 1 | | 1 | ND | 1 | | 1 | ND | 1 | | 1 | ND | 1 | | 1 | ND | 1 | | 1 | ND | 1 | | 1 | ND | 1 | | 1 |
| 2-Hexanone | 591-78-6 | 5 | ug/l | ND | 1 | | 5 | ND | 1 | | 5 | ND | 1 | | 5 | ND | 1 | | 5 | ND | 1 | | 5 | ND | 1 | | 5 | ND | 1 | | 5 | ND | 1 | | 5 |
| Iodomethane | 74-88-43 | 5 | ug/l | ND | 1 | | 1 | ND | 1 | | 1 | ND | 1 | | 1 | ND | 1 | | 1 | ND | 1 | | 1 | ND | 1 | | 1 | ND | 1 | | 1 | ND | 1 | | 1 |
| Isobutyl alcohol | 78-83-1 | 610000 | ug/l | ND | 1 | | 40 | ND | 1 | | 40 | ND | 1 | | 40 | ND | 1 | | 40 | ND | 1 | | 40 | ND | 1 | | 40 | ND | 1 | | 40 | ND | 1 | | 40 |
| Methacrylonitrile | 126-98-7 | 4.1 | ug/l | ND | 1 | | 1 | ND | 1 | | 1 | ND | 1 | | 1 | ND | 1 | | 1 | ND | 1 | | 1 | ND | 1 | | 1 | ND | 1 | | 1 | ND | 1 | | 1 |
| Methyl methacrylate | 80-62-6 | 410000 | ug/l | ND | 1 | | 1 | ND | 1 | | 1 | ND | 1 | | 1 | ND | 1 | | 1 | ND | 1 | | 1 | ND | 1 | | 1 | ND | 1 | | 1 | ND | 1 | | 1 |
| 4-Methyl-2-pentanone | 108-10-1 | 41000 | ug/l | ND | 1 | | 5 | ND | 1 | | 5 | ND | 1 | | 5 | ND | 1 | | 5 | ND | 1 | | 5 | ND | 1 | | 5 | ND | 1 | | 5 | ND | 1 | | 5 |
| Methylene chloride | 75-09-2 | 500 | ug/l | ND | 1 | | 1 | ND | 1 | | 1 | ND | 1 | | 1 | ND | 1 | | 1 | ND | 1 | | 1 | ND | 1 | | 1 | ND | 1 | | 1 | ND | 1 | | 1 |
| Propionitrile | 107-12-0 | 5 | ug/l | ND | 1 | | 2 | ND | 1 | | 2 | ND | 1 | | 2 | ND | 1 | | 2 | ND | 1 | | 2 | ND | 1 | | 2 | ND | 1 | | 2 | ND | 1 | | 2 |
| Styrene | 100-42-5 | 10000 | ug/l | ND | 1 | | 1 | ND | 1 | | 1 | ND | 1 | | 1 | ND | 1 | | 1 | ND | 1 | | 1 | ND | 1 | | 1 | ND | 1 | | 1 | ND | 1 | | 1 |
| 1,1,1,2-Tetracholorethane | 630-20-6 | 7000 | ug/l | ND | 1 | | 1 | ND | 1 | | 1 | ND | 1 | | 1 | ND | 1 | | 1 | ND | 1 | | 1 | ND | 1 | | 1 | ND | 1 | | 1 | ND | 1 | | 1 |
| 1,1,2,2-Tetrachloroethane | 79-34-5 | 30 | ug/l | ND | 1 | | 1 | ND | 1 | | 1 | ND | 1 | | 1 | ND | 1 | | 1 | ND | 1 | | 1 | ND | 1 | | 1 | ND | 1 | | 1 | ND | 1 | | 1 |
| Tetrachloroethene | 127-18-4 | 50 | ug/l | ND | 1 | | 1 | ND | 1 | | 1 | ND | 1 | | 1 | ND | 1 | | 1 | ND | 1 | | 1 | ND | 1 | | 1 | ND | 1 | | 1 | ND | 1 | | 1 |
| Toluene | 108-88-3 | 100000 | ug/l | ND | 1 | | 1 | ND | 1 | | 1 | ND | 1 | | 1 | 0.21 | 1 | J | 1 | ND | 1 | | 1 | ND | 1 | | 1 | 0.16 | 1 | J | 1 | ND | 1 | | 1 |
| Total Xylene | 1330-20-7 | 180000 | ug/l | ND | 1 | | 3 | ND | 1 | | 3 | ND | 1 | | 3 | ND | 1 | | 3 | ND | 1 | | 3 | ND | 1 | | 3 | ND | 1 | | 3 | ND | 1 | | 3 |
| 1,1,1-Trichloroethane | 71-55-6 | 2000 | ug/l | ND | 1 | | 1 | ND | 1 | | 1 | ND | 1 | | 1 | ND | 1 | | 1 | ND | 1 | | 1 | ND | 1 | | 1 | ND | 1 | | 1 | ND | 1 | | 1 |
| 1,1,2-Trichloroethane | 79-00-5 | 50 | ug/l | ND | 1 | | 1 | ND | 1 | | 1 | ND | 1 | | 1 | ND | 1 | | 1 | ND | 1 | | 1 | ND | 1 | | 1 | ND | 1 | | 1 | ND | 1 | | 1 |
| Trichloroethene | 79-01-6 | 50 | ug/l | ND | 1 | | 1 | ND | 1 | | 1 | ND | 1 | | 1 | 0.48 | 1 | J | 1 | ND | 1 | | 1 | ND | 1 | | 1 | ND | 1 | | 1 | 0.64 | 1 | J | 1 |
| Trichlorofluoromethane | 75-69-4 | 200000 | ug/l | ND | 1 | | 1 | ND | 1 | | 1 | ND | 1 | | 1 | ND | 1 | | 1 | ND | 1 | | 1 | ND | 1 | | 1 | ND | 1 | | 1 | ND | 1 | | 1 |
| 1,2,3-Trichloropropane | 96-18-4 | 4000 | ug/l | ND | 1 | | 1 | ND | 1 | | 1 | ND | 1 | | 1 | ND | 1 | | 1 | ND | 1 | | 1 | ND | 1 | | 1 | ND | 1 | | 1 | ND | 1 | | 1 |
| Vinyl acetate | 108-05-4 | 1200 | ug/l | ND | 1 | | 1 | ND | 1 | | 1 | ND | 1 | | 1 | ND | 1 | | 1 | ND | 1 | | 1 | ND | 1 | | 1 | ND | 1 | | 1 | ND | 1 | | 1 |
| Vinyl chloride | 75-01-4 | 20 | ug/l | ND | 1 | | 1 | ND | 1 | | 1 | ND | 1 | | 1 | 0.33 | 1 | J | 1 | ND | 1 | | 1 | ND | 1 | | 1 | ND | 1 | | 1 | ND | 1 | | 1 |
| m-Xylene & p-Xylene | #N/A | NS | ug/l | ND | 1 | | 2 | ND | 1 | | 2 | ND | 1 | | 2 | ND | 1 | | 2 | ND | 1 | | 2 | ND | 1 | | 2 | ND | 1 | | 2 | ND | 1 | | 2 |
| o-Xylene | 95-47-6 | NS | ug/l | ND | 1 | | 1 | ND | 1 | | 1 | ND | 1 | | 1 | ND | 1 | | 1 | ND | 1 | | 1 | ND | 1 | | 1 | ND | 1 | | 1 | ND | 1 | | 1 |

**Table 6**
**Summary of Groundwater Analytical Results - June 2009**
**Comparison to Pennsylvania Non-Residential Non-Use Aquifer Groundwater MSCs**
**U.S. Steel - RCRA Groundwater Sampling**
**Fairless Hills, Pennsylvania**

| | CAS No | PADEP Non-Residential Non-Use Aquifer GW MSC | Location ID | MW4-14-36 | | | | MW4-30-63 | | | | MW4-30-63 | | | | MW4-33-25 | | | | MW5-07-24 | | | | MW5-18-26 | | | | MW5-41-19 | | | | MW6-02-27 | | | |
|---|---|---|---|---|---|---|---|---|---|---|---|---|---|---|---|---|---|---|---|---|---|---|---|---|---|---|---|---|---|---|---|---|---|---|---|
| | | | Sample ID | MW4-14-36_061909 | | | | MW4-30-63_061909 | | | | DUP-02_061909 | | | | MW4-33-25_061909 | | | | MW5-07-24_061809 | | | | MW5-18-26_061709 | | | | MW5-41-19_061709 | | | | MW6-02-27_061909 | | | |
| | | | Sample Date | 6/19/2009 | | | | 6/19/2009 | | | | 6/19/2009 | | | | 6/19/2009 | | | | 6/18/2009 | | | | 6/17/2009 | | | | 6/17/2009 | | | | 6/19/2009 | | | |
| | | | Lab Id | C9F200181006 | | | | C9F200181012 | | | | C9F200181013 | | | | C9F200181011 | | | | C9F190331005 | | | | C9F180195002 | | | | C9F180195001 | | | | C9F200181004 | | | |
| ***RCRA APPENDIX IX VOLATILE ORGANIC COMPOUNDS (Method 8260)*** | | | | Result | DF | Q | RL | Result | DF | Q | RL | Result | DF | Q | RL | Result | DF | Q | RL | Result | DF | Q | RL | Result | DF | Q | RL | Result | DF | Q | RL | Result | DF | Q | RL |
| Acetone | 67-64-1 | 100000 | ug/l | ND | 1 | | 5 | ND | 1 | | 5 | ND | 1 | | 5 | 2.8 | 1 | J | 5 | ND | 1 | | 20 | 7 | 1 | | 5 | ND | 1 | | 5 | ND | 1 | | 5 |
| Acetonitrile | 75-05-8 | 3500 | ug/l | ND | 1 | | 20 | ND | 1 | | 20 | ND | 1 | | 20 | ND | 1 | | 20 | ND | 1 | | 80 | ND | 1 | | 20 | ND | 1 | | 20 | ND | 1 | | 20 |
| Acrolein | 107-02-8 | 1.2 | ug/l | ND | 1 | | ***20*** | ND | 1 | | ***20*** | ND | 1 | | ***20*** | ND | 1 | | ***20*** | ND | 1 | | ***80*** | ND | 1 | | ***20*** | ND | 1 | | ***20*** | ND | 1 | | ***20*** |
| Acrylonitrile | 107-13-1 | 270 | ug/l | ND | 1 | | 20 | ND | 1 | | 20 | ND | 1 | | 20 | ND | 1 | | 20 | ND | 1 | | 80 | ND | 1 | | 20 | ND | 1 | | 20 | ND | 1 | | 20 |
| Benzene | 71-43-2 | 500 | ug/l | ND | 1 | | 1 | ND | 1 | | 1 | ND | 1 | | 1 | ND | 1 | | 1 | 59 | 1 | | 4 | 0.89 | 1 | J | 1 | ND | 1 | | 1 | ND | 1 | | 1 |
| Bromodichloromethane | 75-27-4 | 100 | ug/l | ND | 1 | | 1 | ND | 1 | | 1 | ND | 1 | | 1 | ND | 1 | | 1 | ND | 1 | | 4 | ND | 1 | | 1 | ND | 1 | | 1 | ND | 1 | | 1 |
| Bromoform | 75-25-2 | 10000 | ug/l | ND | 1 | | 1 | ND | 1 | | 1 | ND | 1 | | 1 | ND | 1 | | 1 | ND | 1 | | 4 | ND | 1 | | 1 | ND | 1 | | 1 | ND | 1 | | 1 |
| Bromomethane | 74-83-9 | 1000 | ug/l | ND | 1 | | 1 | ND | 1 | | 1 | ND | 1 | | 1 | ND | 1 | | 1 | ND | 1 | | 4 | ND | 1 | | 1 | ND | 1 | | 1 | ND | 1 | | 1 |
| 2-Butanone | 78-93-3 | 580000 | ug/l | ND | 1 | | 5 | ND | 1 | | 5 | ND | 1 | | 5 | ND | 1 | | 5 | ND | 1 | | 20 | ND | 1 | | 5 | ND | 1 | | 5 | ND | 1 | | 5 |
| Carbon Disulfide | 75-15-0 | 4100 | ug/l | ND | 1 | | 1 | ND | 1 | | 1 | ND | 1 | | 1 | ND | 1 | | 1 | ND | 1 | | 4 | 0.72 | 1 | J | 1 | ND | 1 | | 1 | ND | 1 | | 1 |
| Carbon Tetrachloride | 56-23-5 | 50 | ug/l | ND | 1 | | 1 | ND | 1 | | 1 | ND | 1 | | 1 | ND | 1 | | 1 | ND | 1 | | 4 | ND | 1 | | 1 | ND | 1 | | 1 | ND | 1 | | 1 |
| 3-Chloro-1-propene (Allyl chloride) | 107-05-1 | 580 | ug/l | ND | 1 | | 1 | ND | 1 | | 1 | ND | 1 | | 1 | ND | 1 | | 1 | ND | 1 | | 4 | ND | 1 | | 1 | ND | 1 | | 1 | ND | 1 | | 1 |
| Chlorobenzene | 108-90-7 | 10000 | ug/l | ND | 1 | | 1 | ND | 1 | | 1 | ND | 1 | | 1 | ND | 1 | | 1 | ND | 1 | | 4 | ND | 1 | | 1 | ND | 1 | | 1 | ND | 1 | | 1 |
| Chloroethane | 75-00-3 | 90000 | ug/l | ND | 1 | | 1 | ND | 1 | | 1 | ND | 1 | | 1 | ND | 1 | | 1 | ND | 1 | | 4 | ND | 1 | | 1 | ND | 1 | | 1 | ND | 1 | | 1 |
| Chloroform | 67-66-3 | 1000 | ug/l | ND | 1 | | 1 | ND | 1 | | 1 | ND | 1 | | 1 | ND | 1 | | 1 | ND | 1 | | 4 | ND | 1 | | 1 | ND | 1 | | 1 | ND | 1 | | 1 |
| Chloromethane | 74-87-3 | 300 | ug/l | ND | 1 | | 1 | ND | 1 | | 1 | ND | 1 | | 1 | ND | 1 | | 1 | ND | 1 | | 4 | ND | 1 | | 1 | ND | 1 | | 1 | ND | 1 | | 1 |
| Chloroprene | 126-99-8 | 4100 | ug/l | ND | 1 | | 1 | ND | 1 | | 1 | ND | 1 | | 1 | ND | 1 | | 1 | ND | 1 | | 4 | ND | 1 | | 1 | ND | 1 | | 1 | ND | 1 | | 1 |
| 1,2-Dibromethane | 106-93-4 | 5 | ug/l | ND | 1 | | 1 | ND | 1 | | 1 | ND | 1 | | 1 | ND | 1 | | 1 | ND | 1 | | 4 | ND | 1 | | 1 | ND | 1 | | 1 | ND | 1 | | 1 |
| 1,2-Dibromo-3-chloropropane | 96-12-8 | 20 | ug/l | ND | 1 | | 1 | ND | 1 | | 1 | ND | 1 | | 1 | ND | 1 | | 1 | ND | 1 | | 4 | ND | 1 | | 1 | ND | 1 | | 1 | ND | 1 | | 1 |
| Dibromochloromethane | 124-48-1 | 10000 | ug/l | ND | 1 | | 1 | ND | 1 | | 1 | ND | 1 | | 1 | ND | 1 | | 1 | ND | 1 | | 4 | ND | 1 | | 1 | ND | 1 | | 1 | ND | 1 | | 1 |
| Dibromomethane | 74-95-3 | 20000 | ug/l | ND | 1 | | 1 | ND | 1 | | 1 | ND | 1 | | 1 | ND | 1 | | 1 | ND | 1 | | 4 | ND | 1 | | 1 | ND | 1 | | 1 | ND | 1 | | 1 |
| trans-1,4-Dichloro-2-butene | 110-57-6 | 5 | ug/l | ND | 1 | | 1 | ND | 1 | | 1 | ND | 1 | | 1 | ND | 1 | | 1 | ND | 1 | | 4 | ND | 1 | | 1 | ND | 1 | | 1 | ND | 1 | | 1 |
| Dichlorodifluoromethane | 75-71-8 | 100000 | ug/l | ND | 1 | | 1 | ND | 1 | | 1 | ND | 1 | | 1 | ND | 1 | | 1 | ND | 1 | | 4 | ND | 1 | | 1 | ND | 1 | | 1 | ND | 1 | | 1 |
| 1,1-Dichloroethane | 75-34-3 | 1100 | ug/l | ND | 1 | | 1 | ND | 1 | | 1 | ND | 1 | | 1 | ND | 1 | | 1 | ND | 1 | | 4 | ND | 1 | | 1 | ND | 1 | | 1 | ND | 1 | | 1 |
| 1,2-Dichloroethane | 107-06-2 | 50 | ug/l | ND | 1 | | 1 | ND | 1 | | 1 | ND | 1 | | 1 | ND | 1 | | 1 | ND | 1 | | 4 | ND | 1 | | 1 | ND | 1 | | 1 | ND | 1 | | 1 |
| trans-1,2-Dichloroethene | 156-60-5 | 1000 | ug/l | ND | 1 | | 1 | ND | 1 | | 1 | ND | 1 | | 1 | ND | 1 | | 1 | ND | 1 | | 4 | ND | 1 | | 1 | ND | 1 | | 1 | ND | 1 | | 1 |
| 1,1-Dichloroethene | 75-35-4 | 70 | ug/l | ND | 1 | | 1 | ND | 1 | | 1 | ND | 1 | | 1 | ND | 1 | | 1 | ND | 1 | | 4 | ND | 1 | | 1 | ND | 1 | | 1 | ND | 1 | | 1 |
| 1,2-Dichloropropane | 78-87-5 | 50 | ug/l | ND | 1 | | 1 | ND | 1 | | 1 | ND | 1 | | 1 | ND | 1 | | 1 | ND | 1 | | 4 | ND | 1 | | 1 | ND | 1 | | 1 | ND | 1 | | 1 |
| trans-1,3-Dichloropropene | 10061-02-6 | NS | ug/l | ND | 1 | | 1 | ND | 1 | | 1 | ND | 1 | | 1 | ND | 1 | | 1 | ND | 1 | | 4 | ND | 1 | | 1 | ND | 1 | | 1 | ND | 1 | | 1 |
| cis-1,3-Dichloropropene | 10061-01-5 | NS | ug/l | ND | 1 | | 1 | ND | 1 | | 1 | ND | 1 | | 1 | ND | 1 | | 1 | ND | 1 | | 4 | ND | 1 | | 1 | ND | 1 | | 1 | ND | 1 | | 1 |
| 1,4-Dioxane | 123-91-1 | 240 | ug/l | ND | 1 | | 200 | ND | 1 | | 200 | ND | 1 | | 200 | ND | 1 | | 200 | ND | 1 | | ***800*** | ND | 1 | | 200 | ND | 1 | | 200 | ND | 1 | | 200 |
| Ethyl methacrylate | 97-63-2 | 1800 | ug/l | ND | 1 | | 1 | ND | 1 | | 1 | ND | 1 | | 1 | ND | 1 | | 1 | ND | 1 | | 4 | ND | 1 | | 1 | ND | 1 | | 1 | ND | 1 | | 1 |
| Ethylbenzene | 100-41-4 | 70000 | ug/l | ND | 1 | | 1 | ND | 1 | | 1 | ND | 1 | | 1 | ND | 1 | | 1 | ND | 1 | | 4 | ND | 1 | | 1 | ND | 1 | | 1 | ND | 1 | | 1 |
| 2-Hexanone | 591-78-6 | 5 | ug/l | ND | 1 | | 5 | ND | 1 | | 5 | ND | 1 | | 5 | ND | 1 | | 5 | ND | 1 | | ***20*** | ND | 1 | | 5 | ND | 1 | | 5 | ND | 1 | | 5 |
| Iodomethane | 74-88-43 | 5 | ug/l | ND | 1 | | 1 | ND | 1 | | 1 | ND | 1 | | 1 | ND | 1 | | 1 | ND | 1 | | 4 | ND | 1 | | 1 | ND | 1 | | 1 | ND | 1 | | 1 |
| Isobutyl alcohol | 78-83-1 | 610000 | ug/l | ND | 1 | | 40 | ND | 1 | | 40 | ND | 1 | | 40 | ND | 1 | | 40 | ND | 1 | | 160 | ND | 1 | | 40 | ND | 1 | | 40 | ND | 1 | | 40 |
| Methacrylonitrile | 126-98-7 | 4.1 | ug/l | ND | 1 | | 1 | ND | 1 | | 1 | ND | 1 | | 1 | ND | 1 | | 1 | ND | 1 | | 4 | ND | 1 | | 1 | ND | 1 | | 1 | ND | 1 | | 1 |
| Methyl methacrylate | 80-62-6 | 410000 | ug/l | ND | 1 | | 1 | ND | 1 | | 1 | ND | 1 | | 1 | ND | 1 | | 1 | ND | 1 | | 4 | ND | 1 | | 1 | ND | 1 | | 1 | ND | 1 | | 1 |
| 4-Methyl-2-pentanone | 108-10-1 | 41000 | ug/l | ND | 1 | | 5 | ND | 1 | | 5 | ND | 1 | | 5 | ND | 1 | | 5 | ND | 1 | | 20 | ND | 1 | | 5 | ND | 1 | | 5 | ND | 1 | | 5 |
| Methylene chloride | 75-09-2 | 500 | ug/l | ND | 1 | | 1 | ND | 1 | | 1 | ND | 1 | | 1 | ND | 1 | | 1 | 1.4 | 1 | J B | 4 | ND | 1 | | 1 | ND | 1 | | 1 | ND | 1 | | 1 |
| Propionitrile | 107-12-0 | 5 | ug/l | ND | 1 | | 2 | ND | 1 | | 2 | ND | 1 | | 2 | ND | 1 | | 2 | ND | 1 | | ***8*** | ND | 1 | | 2 | ND | 1 | | 2 | ND | 1 | | 2 |
| Styrene | 100-42-5 | 10000 | ug/l | ND | 1 | | 1 | ND | 1 | | 1 | ND | 1 | | 1 | ND | 1 | | 1 | ND | 1 | | 4 | ND | 1 | | 1 | ND | 1 | | 1 | ND | 1 | | 1 |
| 1,1,1,2-Tetracholorethane | 630-20-6 | 7000 | ug/l | ND | 1 | | 1 | ND | 1 | | 1 | ND | 1 | | 1 | ND | 1 | | 1 | ND | 1 | | 4 | ND | 1 | | 1 | ND | 1 | | 1 | ND | 1 | | 1 |
| 1,1,2,2-Tetrachloroethane | 79-34-5 | 30 | ug/l | ND | 1 | | 1 | ND | 1 | | 1 | ND | 1 | | 1 | ND | 1 | | 1 | ND | 1 | | 4 | ND | 1 | | 1 | ND | 1 | | 1 | ND | 1 | | 1 |
| Tetrachloroethene | 127-18-4 | 50 | ug/l | ND | 1 | | 1 | ND | 1 | | 1 | ND | 1 | | 1 | ND | 1 | | 1 | ND | 1 | | 4 | ND | 1 | | 1 | ND | 1 | | 1 | ND | 1 | | 1 |
| Toluene | 108-88-3 | 100000 | ug/l | ND | 1 | | 1 | ND | 1 | | 1 | ND | 1 | | 1 | ND | 1 | | 1 | ND | 1 | | 4 | 0.15 | 1 | J | 1 | ND | 1 | | 1 | ND | 1 | | 1 |
| Total Xylene | 1330-20-7 | 180000 | ug/l | ND | 1 | | 3 | ND | 1 | | 3 | ND | 1 | | 3 | ND | 1 | | 3 | ND | 1 | | 12 | ND | 1 | | 3 | ND | 1 | | 3 | ND | 1 | | 3 |
| 1,1,1-Trichloroethane | 71-55-6 | 2000 | ug/l | ND | 1 | | 1 | ND | 1 | | 1 | ND | 1 | | 1 | ND | 1 | | 1 | ND | 1 | | 4 | ND | 1 | | 1 | ND | 1 | | 1 | ND | 1 | | 1 |
| 1,1,2-Trichloroethane | 79-00-5 | 50 | ug/l | ND | 1 | | 1 | ND | 1 | | 1 | ND | 1 | | 1 | ND | 1 | | 1 | ND | 1 | | 4 | ND | 1 | | 1 | ND | 1 | | 1 | ND | 1 | | 1 |
| Trichloroethene | 79-01-6 | 50 | ug/l | ND | 1 | | 1 | ND | 1 | | 1 | ND | 1 | | 1 | ND | 1 | | 1 | ND | 1 | | 4 | ND | 1 | | 1 | ND | 1 | | 1 | 0.68 | 1 | J | 1 |
| Trichlorofluoromethane | 75-69-4 | 200000 | ug/l | ND | 1 | | 1 | ND | 1 | | 1 | ND | 1 | | 1 | ND | 1 | | 1 | ND | 1 | | 4 | ND | 1 | | 1 | ND | 1 | | 1 | ND | 1 | | 1 |
| 1,2,3-Trichloropropane | 96-18-4 | 4000 | ug/l | ND | 1 | | 1 | ND | 1 | | 1 | ND | 1 | | 1 | ND | 1 | | 1 | ND | 1 | | 4 | ND | 1 | | 1 | ND | 1 | | 1 | ND | 1 | | 1 |
| Vinyl acetate | 108-05-4 | 1200 | ug/l | ND | 1 | | 1 | ND | 1 | | 1 | ND | 1 | | 1 | ND | 1 | | 1 | ND | 1 | | 4 | ND | 1 | | 1 | ND | 1 | | 1 | ND | 1 | | 1 |
| Vinyl chloride | 75-01-4 | 20 | ug/l | ND | 1 | | 1 | ND | 1 | | 1 | ND | 1 | | 1 | ND | 1 | | 1 | ND | 1 | | 4 | ND | 1 | | 1 | ND | 1 | | 1 | ND | 1 | | 1 |
| m-Xylene & p-Xylene | #N/A | NS | ug/l | ND | 1 | | 2 | ND | 1 | | 2 | ND | 1 | | 2 | ND | 1 | | 2 | ND | 1 | | 8 | ND | 1 | | 2 | ND | 1 | | 2 | ND | 1 | | 2 |
| o-Xylene | 95-47-6 | NS | ug/l | ND | 1 | | 1 | ND | 1 | | 1 | ND | 1 | | 1 | ND | 1 | | 1 | ND | 1 | | 4 | ND | 1 | | 1 | ND | 1 | | 1 | ND | 1 | | 1 |

**Table 6**
**Summary of Groundwater Analytical Results - June 2009**
**Comparison to Pennsylvania Non-Residential Non-Use Aquifer Groundwater MSCs**
**U.S. Steel - RCRA Groundwater Sampling**
**Fairless Hills, Pennsylvania**

| | CAS No | PADEP Non-Residential Non-Use Aquifer GW MSC | Location ID | MW6-05-28 | | | | MW6-06-24 | | | | MW6-08-28 | | | | MW6-12-42 | | | | MW6-20-37 | | | | MW7-04-26 | | | | MW7-05-28 | | | |
|---|---|---|---|---|---|---|---|---|---|---|---|---|---|---|---|---|---|---|---|---|---|---|---|---|---|---|---|---|---|---|---|
| | | | Sample ID | MW6-05-28_061909 | | | | MW6-06-24_061909 | | | | MW6-08-28_061809 | | | | MW6-12-42_061809 | | | | MW6-20-37_061909 | | | | MW7-04-26_061809 | | | | MW7-05-28_061809 | | | |
| | | | Sample Date | 6/19/2009 | | | | 6/19/2009 | | | | 6/18/2009 | | | | 6/18/2009 | | | | 6/19/2009 | | | | 6/18/2009 | | | | 6/18/2009 | | | |
| | | | Lab Id | C9F200181007 | | | | C9F200181008 | | | | C9F190331009 | | | | C9F190331010 | | | | C9F200181005 | | | | C9F190331008 | | | | C9F190331007 | | | |
| ***RCRA APPENDIX IX VOLATILE ORGANIC COMPOUNDS (Method 8260)*** | | | | Result | DF | Q | RL | Result | DF | Q | RL | Result | DF | Q | RL | Result | DF | Q | RL | Result | DF | Q | RL | Result | DF | Q | RL | Result | DF | Q | RL |
| Acetone | 67-64-1 | 100000 | ug/l | ND | 1 | | 5 | ND | 1 | | 5 | ND | 1 | | 5 | ND | 1 | | 5 | 2.6 | 1 | J | 5 | ND | 1 | | 5 | ND | 1 | | 5 |
| Acetonitrile | 75-05-8 | 3500 | ug/l | ND | 1 | | 20 | ND | 1 | | 20 | ND | 1 | | 20 | ND | 1 | | 20 | ND | 1 | | 20 | ND | 1 | | 20 | ND | 1 | | 20 |
| Acrolein | 107-02-8 | 1.2 | ug/l | ND | 1 | | ***20*** | ND | 1 | | ***20*** | ND | 1 | | ***20*** | ND | 1 | | ***20*** | ND | 1 | | ***20*** | ND | 1 | | ***20*** | ND | 1 | | ***20*** |
| Acrylonitrile | 107-13-1 | 270 | ug/l | ND | 1 | | 20 | ND | 1 | | 20 | ND | 1 | | 20 | ND | 1 | | 20 | ND | 1 | | 20 | ND | 1 | | 20 | ND | 1 | | 20 |
| Benzene | 71-43-2 | 500 | ug/l | ND | 1 | | 1 | ND | 1 | | 1 | ND | 1 | | 1 | ND | 1 | | 1 | ND | 1 | | 1 | ND | 1 | | 1 | ND | 1 | | 1 |
| Bromodichloromethane | 75-27-4 | 100 | ug/l | ND | 1 | | 1 | ND | 1 | | 1 | ND | 1 | | 1 | ND | 1 | | 1 | ND | 1 | | 1 | ND | 1 | | 1 | ND | 1 | | 1 |
| Bromoform | 75-25-2 | 10000 | ug/l | ND | 1 | | 1 | ND | 1 | | 1 | ND | 1 | | 1 | ND | 1 | | 1 | ND | 1 | | 1 | ND | 1 | | 1 | ND | 1 | | 1 |
| Bromomethane | 74-83-9 | 1000 | ug/l | ND | 1 | | 1 | ND | 1 | | 1 | ND | 1 | | 1 | ND | 1 | | 1 | ND | 1 | | 1 | ND | 1 | | 1 | ND | 1 | | 1 |
| 2-Butanone | 78-93-3 | 580000 | ug/l | ND | 1 | | 5 | ND | 1 | | 5 | ND | 1 | | 5 | ND | 1 | | 5 | ND | 1 | | 5 | ND | 1 | | 5 | ND | 1 | | 5 |
| Carbon Disulfide | 75-15-0 | 4100 | ug/l | ND | 1 | | 1 | ND | 1 | | 1 | ND | 1 | | 1 | ND | 1 | | 1 | ND | 1 | | 1 | ND | 1 | | 1 | ND | 1 | | 1 |
| Carbon Tetrachloride | 56-23-5 | 50 | ug/l | ND | 1 | | 1 | ND | 1 | | 1 | ND | 1 | | 1 | ND | 1 | | 1 | ND | 1 | | 1 | ND | 1 | | 1 | ND | 1 | | 1 |
| 3-Chloro-1-propene (Allyl chloride) | 107-05-1 | 580 | ug/l | ND | 1 | | 1 | ND | 1 | | 1 | ND | 1 | | 1 | ND | 1 | | 1 | ND | 1 | | 1 | ND | 1 | | 1 | ND | 1 | | 1 |
| Chlorobenzene | 108-90-7 | 10000 | ug/l | ND | 1 | | 1 | ND | 1 | | 1 | ND | 1 | | 1 | ND | 1 | | 1 | ND | 1 | | 1 | ND | 1 | | 1 | ND | 1 | | 1 |
| Chloroethane | 75-00-3 | 90000 | ug/l | ND | 1 | | 1 | ND | 1 | | 1 | ND | 1 | | 1 | ND | 1 | | 1 | ND | 1 | | 1 | ND | 1 | | 1 | ND | 1 | | 1 |
| Chloroform | 67-66-3 | 1000 | ug/l | ND | 1 | | 1 | ND | 1 | | 1 | ND | 1 | | 1 | ND | 1 | | 1 | ND | 1 | | 1 | ND | 1 | | 1 | ND | 1 | | 1 |
| Chloromethane | 74-87-3 | 300 | ug/l | ND | 1 | | 1 | ND | 1 | | 1 | ND | 1 | | 1 | ND | 1 | | 1 | ND | 1 | | 1 | ND | 1 | | 1 | ND | 1 | | 1 |
| Chloroprene | 126-99-8 | 4100 | ug/l | ND | 1 | | 1 | ND | 1 | | 1 | ND | 1 | | 1 | ND | 1 | | 1 | ND | 1 | | 1 | ND | 1 | | 1 | ND | 1 | | 1 |
| 1,2-Dibromethane | 106-93-4 | 5 | ug/l | ND | 1 | | 1 | ND | 1 | | 1 | ND | 1 | | 1 | ND | 1 | | 1 | ND | 1 | | 1 | ND | 1 | | 1 | ND | 1 | | 1 |
| 1,2-Dibromo-3-chloropropane | 96-12-8 | 20 | ug/l | ND | 1 | | 1 | ND | 1 | | 1 | ND | 1 | | 1 | ND | 1 | | 1 | ND | 1 | | 1 | ND | 1 | | 1 | ND | 1 | | 1 |
| Dibromochloromethane | 124-48-1 | 10000 | ug/l | ND | 1 | | 1 | ND | 1 | | 1 | ND | 1 | | 1 | ND | 1 | | 1 | ND | 1 | | 1 | ND | 1 | | 1 | ND | 1 | | 1 |
| Dibromomethane | 74-95-3 | 20000 | ug/l | ND | 1 | | 1 | ND | 1 | | 1 | ND | 1 | | 1 | ND | 1 | | 1 | ND | 1 | | 1 | ND | 1 | | 1 | ND | 1 | | 1 |
| trans-1,4-Dichloro-2-butene | 110-57-6 | 5 | ug/l | ND | 1 | | 1 | ND | 1 | | 1 | ND | 1 | | 1 | ND | 1 | | 1 | ND | 1 | | 1 | ND | 1 | | 1 | ND | 1 | | 1 |
| Dichlorodifluoromethane | 75-71-8 | 100000 | ug/l | ND | 1 | | 1 | ND | 1 | | 1 | ND | 1 | | 1 | ND | 1 | | 1 | ND | 1 | | 1 | ND | 1 | | 1 | ND | 1 | | 1 |
| 1,1-Dichloroethane | 75-34-3 | 1100 | ug/l | ND | 1 | | 1 | 1 | 1 | | 1 | 0.37 | 1 | J | 1 | 0.17 | 1 | J | 1 | ND | 1 | | 1 | ND | 1 | | 1 | ND | 1 | | 1 |
| 1,2-Dichloroethane | 107-06-2 | 50 | ug/l | ND | 1 | | 1 | ND | 1 | | 1 | ND | 1 | | 1 | ND | 1 | | 1 | ND | 1 | | 1 | ND | 1 | | 1 | ND | 1 | | 1 |
| trans-1,2-Dichloroethene | 156-60-5 | 1000 | ug/l | ND | 1 | | 1 | ND | 1 | | 1 | ND | 1 | | 1 | ND | 1 | | 1 | ND | 1 | | 1 | ND | 1 | | 1 | ND | 1 | | 1 |
| 1,1-Dichloroethene | 75-35-4 | 70 | ug/l | ND | 1 | | 1 | ND | 1 | | 1 | ND | 1 | | 1 | ND | 1 | | 1 | ND | 1 | | 1 | ND | 1 | | 1 | ND | 1 | | 1 |
| 1,2-Dichloropropane | 78-87-5 | 50 | ug/l | ND | 1 | | 1 | ND | 1 | | 1 | ND | 1 | | 1 | ND | 1 | | 1 | ND | 1 | | 1 | ND | 1 | | 1 | ND | 1 | | 1 |
| trans-1,3-Dichloropropene | 10061-02-6 | NS | ug/l | ND | 1 | | 1 | ND | 1 | | 1 | ND | 1 | | 1 | ND | 1 | | 1 | ND | 1 | | 1 | ND | 1 | | 1 | ND | 1 | | 1 |
| cis-1,3-Dichloropropene | 10061-01-5 | NS | ug/l | ND | 1 | | 1 | ND | 1 | | 1 | ND | 1 | | 1 | ND | 1 | | 1 | ND | 1 | | 1 | ND | 1 | | 1 | ND | 1 | | 1 |
| 1,4-Dioxane | 123-91-1 | 240 | ug/l | ND | 1 | | 200 | ND | 1 | | 200 | ND | 1 | | 200 | ND | 1 | | 200 | ND | 1 | | 200 | ND | 1 | | 200 | ND | 1 | | 200 |
| Ethyl methacrylate | 97-63-2 | 1800 | ug/l | ND | 1 | | 1 | ND | 1 | | 1 | ND | 1 | | 1 | ND | 1 | | 1 | ND | 1 | | 1 | ND | 1 | | 1 | ND | 1 | | 1 |
| Ethylbenzene | 100-41-4 | 70000 | ug/l | ND | 1 | | 1 | ND | 1 | | 1 | ND | 1 | | 1 | ND | 1 | | 1 | ND | 1 | | 1 | ND | 1 | | 1 | ND | 1 | | 1 |
| 2-Hexanone | 591-78-6 | 5 | ug/l | ND | 1 | | 5 | ND | 1 | | 5 | ND | 1 | | 5 | ND | 1 | | 5 | ND | 1 | | 5 | ND | 1 | | 5 | ND | 1 | | 5 |
| Iodomethane | 74-88-43 | 5 | ug/l | ND | 1 | | 1 | ND | 1 | | 1 | ND | 1 | | 1 | ND | 1 | | 1 | ND | 1 | | 1 | ND | 1 | | 1 | ND | 1 | | 1 |
| Isobutyl alcohol | 78-83-1 | 610000 | ug/l | ND | 1 | | 40 | ND | 1 | | 40 | ND | 1 | | 40 | ND | 1 | | 40 | ND | 1 | | 40 | ND | 1 | | 40 | ND | 1 | | 40 |
| Methacrylonitrile | 126-98-7 | 4.1 | ug/l | ND | 1 | | 1 | ND | 1 | | 1 | ND | 1 | | 1 | ND | 1 | | 1 | ND | 1 | | 1 | ND | 1 | | 1 | ND | 1 | | 1 |
| Methyl methacrylate | 80-62-6 | 410000 | ug/l | ND | 1 | | 1 | ND | 1 | | 1 | ND | 1 | | 1 | ND | 1 | | 1 | ND | 1 | | 1 | ND | 1 | | 1 | ND | 1 | | 1 |
| 4-Methyl-2-pentanone | 108-10-1 | 41000 | ug/l | ND | 1 | | 5 | ND | 1 | | 5 | ND | 1 | | 5 | ND | 1 | | 5 | ND | 1 | | 5 | ND | 1 | | 5 | ND | 1 | | 5 |
| Methylene chloride | 75-09-2 | 500 | ug/l | ND | 1 | | 1 | ND | 1 | | 1 | ND | 1 | | 1 | ND | 1 | | 1 | ND | 1 | | 1 | ND | 1 | | 1 | ND | 1 | | 1 |
| Propionitrile | 107-12-0 | 5 | ug/l | ND | 1 | | 2 | ND | 1 | | 2 | ND | 1 | | 2 | ND | 1 | | 2 | ND | 1 | | 2 | ND | 1 | | 2 | ND | 1 | | 2 |
| Styrene | 100-42-5 | 10000 | ug/l | ND | 1 | | 1 | ND | 1 | | 1 | ND | 1 | | 1 | ND | 1 | | 1 | ND | 1 | | 1 | ND | 1 | | 1 | ND | 1 | | 1 |
| 1,1,1,2-Tetracholorethane | 630-20-6 | 7000 | ug/l | ND | 1 | | 1 | ND | 1 | | 1 | ND | 1 | | 1 | ND | 1 | | 1 | ND | 1 | | 1 | ND | 1 | | 1 | ND | 1 | | 1 |
| 1,1,2,2-Tetrachloroethane | 79-34-5 | 30 | ug/l | ND | 1 | | 1 | ND | 1 | | 1 | ND | 1 | | 1 | ND | 1 | | 1 | ND | 1 | | 1 | ND | 1 | | 1 | ND | 1 | | 1 |
| Tetrachloroethene | 127-18-4 | 50 | ug/l | 0.29 | 1 | J | 1 | 0.4 | 1 | J | 1 | 0.36 | 1 | J | 1 | ND | 1 | | 1 | ND | 1 | | 1 | ND | 1 | | 1 | ND | 1 | | 1 |
| Toluene | 108-88-3 | 100000 | ug/l | ND | 1 | | 1 | ND | 1 | | 1 | ND | 1 | | 1 | ND | 1 | | 1 | ND | 1 | | 1 | 0.36 | 1 | J | 1 | ND | 1 | | 1 |
| Total Xylene | 1330-20-7 | 180000 | ug/l | ND | 1 | | 3 | ND | 1 | | 3 | ND | 1 | | 3 | ND | 1 | | 3 | ND | 1 | | 3 | ND | 1 | | 3 | ND | 1 | | 3 |
| 1,1,1-Trichloroethane | 71-55-6 | 2000 | ug/l | ND | 1 | | 1 | ND | 1 | | 1 | ND | 1 | | 1 | ND | 1 | | 1 | ND | 1 | | 1 | ND | 1 | | 1 | ND | 1 | | 1 |
| 1,1,2-Trichloroethane | 79-00-5 | 50 | ug/l | ND | 1 | | 1 | ND | 1 | | 1 | ND | 1 | | 1 | ND | 1 | | 1 | ND | 1 | | 1 | ND | 1 | | 1 | ND | 1 | | 1 |
| Trichloroethene | 79-01-6 | 50 | ug/l | 1 | 1 | | 1 | 3.3 | 1 | | 1 | 2.2 | 1 | | 1 | ND | 1 | | 1 | ND | 1 | | 1 | ND | 1 | | 1 | ND | 1 | | 1 |
| Trichlorofluoromethane | 75-69-4 | 200000 | ug/l | ND | 1 | | 1 | ND | 1 | | 1 | ND | 1 | | 1 | ND | 1 | | 1 | ND | 1 | | 1 | ND | 1 | | 1 | ND | 1 | | 1 |
| 1,2,3-Trichloropropane | 96-18-4 | 4000 | ug/l | ND | 1 | | 1 | ND | 1 | | 1 | ND | 1 | | 1 | ND | 1 | | 1 | ND | 1 | | 1 | ND | 1 | | 1 | ND | 1 | | 1 |
| Vinyl acetate | 108-05-4 | 1200 | ug/l | ND | 1 | | 1 | ND | 1 | | 1 | ND | 1 | | 1 | ND | 1 | | 1 | ND | 1 | | 1 | ND | 1 | | 1 | ND | 1 | | 1 |
| Vinyl chloride | 75-01-4 | 20 | ug/l | ND | 1 | | 1 | ND | 1 | | 1 | ND | 1 | | 1 | ND | 1 | | 1 | ND | 1 | | 1 | ND | 1 | | 1 | ND | 1 | | 1 |
| m-Xylene & p-Xylene | #N/A | NS | ug/l | ND | 1 | | 2 | ND | 1 | | 2 | ND | 1 | | 2 | ND | 1 | | 2 | ND | 1 | | 2 | ND | 1 | | 2 | ND | 1 | | 2 |
| o-Xylene | 95-47-6 | NS | ug/l | ND | 1 | | 1 | ND | 1 | | 1 | ND | 1 | | 1 | ND | 1 | | 1 | ND | 1 | | 1 | ND | 1 | | 1 | ND | 1 | | 1 |

**Table 6**
**Summary of Groundwater Analytical Results - June 2009**
**Comparison to Pennsylvania Non-Residential Non-Use Aquifer Groundwater MSCs**
**U.S. Steel - RCRA Groundwater Sampling**
**Fairless Hills, Pennsylvania**

| | CAS No | PADEP Non-Residential Non-Use Aquifer GW MSC | Location ID<br>Sample ID<br>Sample Date<br>Lab Id | FB-01<br>FB-01_061709<br>6/17/2009<br>C9F180195005 | | | | FB-02<br>FB-02_061809<br>6/18/2009<br>C9F190331011 | | | | FB-03<br>FB-03_061909<br>6/19/2009<br>C9F200181014 | | | | TB-01<br>TB-01_061709<br>C9F180195006<br>39981 | | | | TB-02<br>TB-02_061809<br>C9F190331015<br>39982 | | | | TB-03<br>TB-03_061909<br>C9F200181015<br>39983 | | | |
|---|---|---|---|---|---|---|---|---|---|---|---|---|---|---|---|---|---|---|---|---|---|---|---|---|---|---|---|
| ***RCRA APPENDIX IX VOLATILE ORGANIC COMPOUNDS (Method 8260)*** | | | | Result | DF | Q | RL | Result | DF | Q | RL | Result | DF | Q | RL | Result | DF | Q | RL | Result | DF | Q | RL | Result | DF | Q | RL |
| Acetone | 67-64-1 | 100000 | ug/l | ND | 1 | | 5 | ND | 1 | | 5 | ND | 1 | | 5 | ND | 1 | | 5 | ND | 1 | | 5 | ND | 1 | | 5 |
| Acetonitrile | 75-05-8 | 3500 | ug/l | ND | 1 | | 20 | ND | 1 | | 20 | ND | 1 | | 20 | ND | 1 | | 20 | ND | 1 | | 20 | ND | 1 | | 20 |
| Acrolein | 107-02-8 | 1.2 | ug/l | ND | 1 | | ***20*** | ND | 1 | | ***20*** | ND | 1 | | ***20*** | ND | 1 | | ***20*** | ND | 1 | | ***20*** | ND | 1 | | ***20*** |
| Acrylonitrile | 107-13-1 | 270 | ug/l | ND | 1 | | 20 | ND | 1 | | 20 | ND | 1 | | 20 | ND | 1 | | 20 | ND | 1 | | 20 | ND | 1 | | 20 |
| Benzene | 71-43-2 | 500 | ug/l | ND | 1 | | 1 | ND | 1 | | 1 | ND | 1 | | 1 | ND | 1 | | 1 | ND | 1 | | 1 | ND | 1 | | 1 |
| Bromodichloromethane | 75-27-4 | 100 | ug/l | ND | 1 | | 1 | ND | 1 | | 1 | ND | 1 | | 1 | ND | 1 | | 1 | ND | 1 | | 1 | ND | 1 | | 1 |
| Bromoform | 75-25-2 | 10000 | ug/l | ND | 1 | | 1 | ND | 1 | | 1 | ND | 1 | | 1 | ND | 1 | | 1 | ND | 1 | | 1 | ND | 1 | | 1 |
| Bromomethane | 74-83-9 | 1000 | ug/l | ND | 1 | | 1 | ND | 1 | | 1 | ND | 1 | | 1 | ND | 1 | | 1 | ND | 1 | | 1 | ND | 1 | | 1 |
| 2-Butanone | 78-93-3 | 580000 | ug/l | ND | 1 | | 5 | ND | 1 | | 5 | ND | 1 | | 5 | ND | 1 | | 5 | ND | 1 | | 5 | ND | 1 | | 5 |
| Carbon Disulfide | 75-15-0 | 4100 | ug/l | ND | 1 | | 1 | ND | 1 | | 1 | ND | 1 | | 1 | ND | 1 | | 1 | ND | 1 | | 1 | ND | 1 | | 1 |
| Carbon Tetrachloride | 56-23-5 | 50 | ug/l | ND | 1 | | 1 | ND | 1 | | 1 | ND | 1 | | 1 | ND | 1 | | 1 | ND | 1 | | 1 | ND | 1 | | 1 |
| 3-Chloro-1-propene (Allyl chloride) | 107-05-1 | 580 | ug/l | ND | 1 | | 1 | ND | 1 | | 1 | ND | 1 | | 1 | ND | 1 | | 1 | ND | 1 | | 1 | ND | 1 | | 1 |
| Chlorobenzene | 108-90-7 | 10000 | ug/l | ND | 1 | | 1 | ND | 1 | | 1 | ND | 1 | | 1 | ND | 1 | | 1 | ND | 1 | | 1 | ND | 1 | | 1 |
| Chloroethane | 75-00-3 | 90000 | ug/l | ND | 1 | | 1 | ND | 1 | | 1 | ND | 1 | | 1 | ND | 1 | | 1 | ND | 1 | | 1 | ND | 1 | | 1 |
| Chloroform | 67-66-3 | 1000 | ug/l | ND | 1 | | 1 | ND | 1 | | 1 | ND | 1 | | 1 | ND | 1 | | 1 | ND | 1 | | 1 | ND | 1 | | 1 |
| Chloromethane | 74-87-3 | 300 | ug/l | ND | 1 | | 1 | ND | 1 | | 1 | ND | 1 | | 1 | ND | 1 | | 1 | ND | 1 | | 1 | ND | 1 | | 1 |
| Chloroprene | 126-99-8 | 4100 | ug/l | ND | 1 | | 1 | ND | 1 | | 1 | ND | 1 | | 1 | ND | 1 | | 1 | ND | 1 | | 1 | ND | 1 | | 1 |
| 1,2-Dibromethane | 106-93-4 | 5 | ug/l | ND | 1 | | 1 | ND | 1 | | 1 | ND | 1 | | 1 | ND | 1 | | 1 | ND | 1 | | 1 | ND | 1 | | 1 |
| 1,2-Dibromo-3-chloropropane | 96-12-8 | 20 | ug/l | ND | 1 | | 1 | ND | 1 | | 1 | ND | 1 | | 1 | ND | 1 | | 1 | ND | 1 | | 1 | ND | 1 | | 1 |
| Dibromochloromethane | 124-48-1 | 10000 | ug/l | ND | 1 | | 1 | ND | 1 | | 1 | ND | 1 | | 1 | ND | 1 | | 1 | ND | 1 | | 1 | ND | 1 | | 1 |
| Dibromomethane | 74-95-3 | 20000 | ug/l | ND | 1 | | 1 | ND | 1 | | 1 | ND | 1 | | 1 | ND | 1 | | 1 | ND | 1 | | 1 | ND | 1 | | 1 |
| trans-1,4-Dichloro-2-butene | 110-57-6 | 5 | ug/l | ND | 1 | | 1 | ND | 1 | | 1 | ND | 1 | | 1 | ND | 1 | | 1 | ND | 1 | | 1 | ND | 1 | | 1 |
| Dichlorodifluoromethane | 75-71-8 | 100000 | ug/l | ND | 1 | | 1 | ND | 1 | | 1 | ND | 1 | | 1 | ND | 1 | | 1 | ND | 1 | | 1 | ND | 1 | | 1 |
| 1,1-Dichloroethane | 75-34-3 | 1100 | ug/l | ND | 1 | | 1 | ND | 1 | | 1 | ND | 1 | | 1 | ND | 1 | | 1 | ND | 1 | | 1 | ND | 1 | | 1 |
| 1,2-Dichloroethane | 107-06-2 | 50 | ug/l | ND | 1 | | 1 | ND | 1 | | 1 | ND | 1 | | 1 | ND | 1 | | 1 | ND | 1 | | 1 | ND | 1 | | 1 |
| trans-1,2-Dichloroethene | 156-60-5 | 1000 | ug/l | ND | 1 | | 1 | ND | 1 | | 1 | ND | 1 | | 1 | ND | 1 | | 1 | ND | 1 | | 1 | ND | 1 | | 1 |
| 1,1-Dichloroethene | 75-35-4 | 70 | ug/l | ND | 1 | | 1 | ND | 1 | | 1 | ND | 1 | | 1 | ND | 1 | | 1 | ND | 1 | | 1 | ND | 1 | | 1 |
| 1,2-Dichloropropane | 78-87-5 | 50 | ug/l | ND | 1 | | 1 | ND | 1 | | 1 | ND | 1 | | 1 | ND | 1 | | 1 | ND | 1 | | 1 | ND | 1 | | 1 |
| trans-1,3-Dichloropropene | 10061-02-6 | NS | ug/l | ND | 1 | | 1 | ND | 1 | | 1 | ND | 1 | | 1 | ND | 1 | | 1 | ND | 1 | | 1 | ND | 1 | | 1 |
| cis-1,3-Dichloropropene | 10061-01-5 | NS | ug/l | ND | 1 | | 1 | ND | 1 | | 1 | ND | 1 | | 1 | ND | 1 | | 1 | ND | 1 | | 1 | ND | 1 | | 1 |
| 1,4-Dioxane | 123-91-1 | 240 | ug/l | ND | 1 | | 200 | ND | 1 | | 200 | ND | 1 | | 200 | ND | 1 | | 200 | ND | 1 | | 200 | ND | 1 | | 200 |
| Ethyl methacrylate | 97-63-2 | 1800 | ug/l | ND | 1 | | 1 | ND | 1 | | 1 | ND | 1 | | 1 | ND | 1 | | 1 | ND | 1 | | 1 | ND | 1 | | 1 |
| Ethylbenzene | 100-41-4 | 70000 | ug/l | ND | 1 | | 1 | ND | 1 | | 1 | ND | 1 | | 1 | ND | 1 | | 1 | ND | 1 | | 1 | ND | 1 | | 1 |
| 2-Hexanone | 591-78-6 | 5 | ug/l | ND | 1 | | 5 | ND | 1 | | 5 | ND | 1 | | 5 | ND | 1 | | 5 | ND | 1 | | 5 | ND | 1 | | 5 |
| Iodomethane | 74-88-43 | 5 | ug/l | ND | 1 | | 1 | ND | 1 | | 1 | ND | 1 | | 1 | ND | 1 | | 1 | ND | 1 | | 1 | ND | 1 | | 1 |
| Isobutyl alcohol | 78-83-1 | 610000 | ug/l | ND | 1 | | 40 | ND | 1 | | 40 | ND | 1 | | 40 | ND | 1 | | 40 | ND | 1 | | 40 | ND | 1 | | 40 |
| Methacrylonitrile | 126-98-7 | 4.1 | ug/l | ND | 1 | | 1 | ND | 1 | | 1 | ND | 1 | | 1 | ND | 1 | | 1 | ND | 1 | | 1 | ND | 1 | | 1 |
| Methyl methacrylate | 80-62-6 | 410000 | ug/l | ND | 1 | | 1 | ND | 1 | | 1 | ND | 1 | | 1 | ND | 1 | | 1 | ND | 1 | | 1 | ND | 1 | | 1 |
| 4-Methyl-2-pentanone | 108-10-1 | 41000 | ug/l | ND | 1 | | 5 | ND | 1 | | 5 | ND | 1 | | 5 | ND | 1 | | 5 | ND | 1 | | 5 | ND | 1 | | 5 |
| Methylene chloride | 75-09-2 | 500 | ug/l | ND | 1 | | 1 | 0.46 | 1 | J B | 1 | ND | 1 | | 1 | 4.5 | 1 | | 1 | 16 | 1 | B | 1 | 5.1 | 1 | | 1 |
| Propionitrile | 107-12-0 | 5 | ug/l | ND | 1 | | 2 | ND | 1 | | 2 | ND | 1 | | 2 | ND | 1 | | 2 | ND | 1 | | 2 | ND | 1 | | 2 |
| Styrene | 100-42-5 | 10000 | ug/l | ND | 1 | | 1 | ND | 1 | | 1 | ND | 1 | | 1 | ND | 1 | | 1 | ND | 1 | | 1 | ND | 1 | | 1 |
| 1,1,1,2-Tetracholorethane | 630-20-6 | 7000 | ug/l | ND | 1 | | 1 | ND | 1 | | 1 | ND | 1 | | 1 | ND | 1 | | 1 | ND | 1 | | 1 | ND | 1 | | 1 |
| 1,1,2,2-Tetrachloroethane | 79-34-5 | 30 | ug/l | ND | 1 | | 1 | ND | 1 | | 1 | ND | 1 | | 1 | ND | 1 | | 1 | ND | 1 | | 1 | ND | 1 | | 1 |
| Tetrachloroethene | 127-18-4 | 50 | ug/l | ND | 1 | | 1 | ND | 1 | | 1 | ND | 1 | | 1 | ND | 1 | | 1 | ND | 1 | | 1 | ND | 1 | | 1 |
| Toluene | 108-88-3 | 100000 | ug/l | ND | 1 | | 1 | ND | 1 | | 1 | ND | 1 | | 1 | 0.16 | 1 | J | 1 | 0.48 | 1 | J | 1 | ND | 1 | | 1 |
| Total Xylene | 1330-20-7 | 180000 | ug/l | ND | 1 | | 3 | ND | 1 | | 3 | ND | 1 | | 3 | ND | 1 | | 3 | ND | 1 | | 3 | ND | 1 | | 3 |
| 1,1,1-Trichloroethane | 71-55-6 | 2000 | ug/l | ND | 1 | | 1 | ND | 1 | | 1 | ND | 1 | | 1 | ND | 1 | | 1 | ND | 1 | | 1 | ND | 1 | | 1 |
| 1,1,2-Trichloroethane | 79-00-5 | 50 | ug/l | ND | 1 | | 1 | ND | 1 | | 1 | ND | 1 | | 1 | ND | 1 | | 1 | ND | 1 | | 1 | ND | 1 | | 1 |
| Trichloroethene | 79-01-6 | 50 | ug/l | ND | 1 | | 1 | ND | 1 | | 1 | ND | 1 | | 1 | ND | 1 | | 1 | ND | 1 | | 1 | ND | 1 | | 1 |
| Trichlorofluoromethane | 75-69-4 | 200000 | ug/l | ND | 1 | | 1 | ND | 1 | | 1 | ND | 1 | | 1 | ND | 1 | | 1 | ND | 1 | | 1 | ND | 1 | | 1 |
| 1,2,3-Trichloropropane | 96-18-4 | 4000 | ug/l | ND | 1 | | 1 | ND | 1 | | 1 | ND | 1 | | 1 | ND | 1 | | 1 | ND | 1 | | 1 | ND | 1 | | 1 |
| Vinyl acetate | 108-05-4 | 1200 | ug/l | ND | 1 | | 1 | ND | 1 | | 1 | ND | 1 | | 1 | ND | 1 | | 1 | ND | 1 | | 1 | ND | 1 | | 1 |
| Vinyl chloride | 75-01-4 | 20 | ug/l | ND | 1 | | 1 | ND | 1 | | 1 | ND | 1 | | 1 | ND | 1 | | 1 | ND | 1 | | 1 | ND | 1 | | 1 |
| m-Xylene & p-Xylene | #N/A | NS | ug/l | ND | 1 | | 2 | ND | 1 | | 2 | ND | 1 | | 2 | ND | 1 | | 2 | ND | 1 | | 2 | ND | 1 | | 2 |
| o-Xylene | 95-47-6 | NS | ug/l | ND | 1 | | 1 | ND | 1 | | 1 | ND | 1 | | 1 | ND | 1 | | 1 | ND | 1 | | 1 | ND | 1 | | 1 |

**Table 6**
**Summary of Groundwater Analytical Results - June 2009**
**Comparison to Pennsylvania Non-Residential Non-Use Aquifer Groundwater MSCs**
**U.S. Steel - RCRA Groundwater Sampling**
**Fairless Hills, Pennsylvania**

| | CAS No | PADEP Non-Residential Non-Use Aquifer GW MSC | Location ID<br>Sample ID<br>Sample Date<br>Lab Id | MW1-02-31<br>MW1-02-31_061809<br>6/18/2009<br>C9F190331006 | | | | MW1-12-29<br>MW1-12-29_061809<br>6/18/2009<br>C9F190331004 | | | | MW1-15-29<br>MW1-15-29_061909<br>6/19/2009<br>C9F200181009 | | | | MW1-23-47<br>MW1-23-47_061909<br>6/19/2009<br>C9F200181001 | | | | MW1-26-27<br>MW1-26-27_061709<br>6/17/2009<br>C9F180195003 | | | | MW1-28-74<br>MW1-28-74_061809<br>6/18/2009<br>C9F190331012 | | | | MW2-01-22<br>MW2-01-22_061809<br>6/18/2009<br>C9F190331013 | | | |
|---|---|---|---|---|---|---|---|---|---|---|---|---|---|---|---|---|---|---|---|---|---|---|---|---|---|---|---|---|---|
| ***RCRA APPENDIX IX SEMI-VOLATILE ORGANIC COMPOUNDS (Method 8270)*** | | | | Result | DF | Q | RL | Result | DF | Q | RL | Result | DF | Q | RL | Result | DF | Q | RL | Result | DF | Q | RL | Result | DF | Q | RL | Result | DF | Q | RL |
| 2-Acetylaminofluorene (2AAF) | 53-96-3 | 680 | ug/l | ND | 1.04 | | 1 | ND | 1.06 | | 1.1 | ND | 1.1 | | 1.1 | ND | 1.05 | | 1 | ND | 1.1 | | 1.1 | ND | 1.11 | | 1.1 | ND | 1.09 | | 1.1 |
| a,a-Dimethylphenethylamine | 122-09-8 | 5 | ug/l | ND | 1.04 | | 1 | ND | 1.06 | | 1.1 | ND | 1.1 | | 1.1 | ND | 1.05 | | 1 | ND | 1.1 | | 1.1 | ND | 1.11 | | 1.1 | ND | 1.09 | | 1.1 |
| Acenaphthene | 83-32-9 | 3800 | ug/l | ND | 1.04 | | 0.21 | ND | 1.06 | | 0.21 | 0.036 | 1.1 | J B | 0.22 | 0.035 | 1.05 | J B | 0.21 | 0.021 | 1.1 | J | 0.22 | 0.016 | 1.11 | J | 0.22 | 0.031 | 1.09 | J | 0.22 |
| Acenaphthylene | 208-96-8 | 16000 | ug/l | ND | 1.04 | | 0.21 | ND | 1.06 | | 0.21 | ND | 1.1 | | 0.22 | ND | 1.05 | | 0.21 | ND | 1.1 | | 0.22 | ND | 1.11 | | 0.22 | ND | 1.09 | | 0.22 |
| Acetophenone | 98-86-2 | 10000 | ug/l | ND | 1.04 | | 1 | ND | 1.06 | | 1.1 | 0.027 | 1.1 | J | 1.1 | ND | 1.05 | | 1 | ND | 1.1 | | 1.1 | ND | 1.11 | | 1.1 | ND | 1.09 | | 1.1 |
| 4-Aminobiphenyl | 92-67-1 | 120 | ug/l | ND | 1.04 | | 1 | ND | 1.06 | | 1.1 | ND | 1.1 | | 1.1 | ND | 1.05 | | 1 | ND | 1.1 | | 1.1 | ND | 1.11 | | 1.1 | ND | 1.09 | | 1.1 |
| Aniline | 62-53-3 | 5.8 | ug/l | ND | 1.04 | | 1 | ND | 1.06 | | 1.1 | ND | 1.1 | | 1.1 | ND | 1.05 | | 1 | ND | 1.1 | | 1.1 | ND | 1.11 | | 1.1 | ND | 1.09 | | 1.1 |
| Anthracene | 120-12-7 | 66 | ug/l | 0.037 | 1.04 | J | 0.21 | ND | 1.06 | | 0.21 | ND | 1.1 | | 0.22 | ND | 1.05 | | 0.21 | ND | 1.1 | | 0.22 | ND | 1.11 | | 0.22 | ND | 1.09 | | 0.22 |
| Aramite | 140-57-8 | NS | ug/l | ND | 1.04 | | 1 | ND | 1.06 | | 1.1 | ND | 1.1 | | 1.1 | ND | 1.05 | | 1 | ND | 1.1 | | 1.1 | ND | 1.11 | | 1.1 | ND | 1.09 | | 1.1 |
| Benzo(a)anthracene | 56-55-3 | 11 | ug/l | ND | 1.04 | | 0.21 | ND | 1.06 | | 0.21 | ND | 1.1 | | 0.22 | ND | 1.05 | | 0.21 | 0.057 | 1.1 | J | 0.22 | ND | 1.11 | | 0.22 | ND | 1.09 | | 0.22 |
| Benzo(a)pyrene | 50-32-8 | 3.8 | ug/l | ND | 1.04 | | 0.21 | ND | 1.06 | | 0.21 | ND | 1.1 | | 0.22 | ND | 1.05 | | 0.21 | ND | 1.1 | | 0.22 | ND | 1.11 | | 0.22 | ND | 1.09 | | 0.22 |
| Benzo(b)fluoranthene | 205-99-2 | 1.2 | ug/l | ND | 1.04 | | 0.21 | ND | 1.06 | | 0.21 | ND | 1.1 | | 0.22 | ND | 1.05 | | 0.21 | ND | 1.1 | | 0.22 | ND | 1.11 | | 0.22 | ND | 1.09 | | 0.22 |
| Benzo(ghi)perylene | 191-24-2 | 0.26 | ug/l | ND | 1.04 | | 0.21 | ND | 1.06 | | 0.21 | ND | 1.1 | | 0.22 | ND | 1.05 | | 0.21 | ND | 1.1 | | 0.22 | ND | 1.11 | | 0.22 | ND | 1.09 | | 0.22 |
| Benzo(k)fluoranthene | 207-08-9 | 0.55 | ug/l | ND | 1.04 | | 0.21 | ND | 1.06 | | 0.21 | ND | 1.1 | | 0.22 | ND | 1.05 | | 0.21 | ND | 1.1 | | 0.22 | ND | 1.11 | | 0.22 | ND | 1.09 | | 0.22 |
| Benzyl alcohol | 100-51-6 | 31000 | ug/l | ND | 1.04 | | 1 | ND | 1.06 | | 1.1 | ND | 1.1 | | 1.1 | ND | 1.05 | | 1 | 0.14 | 1.1 | J | 1.1 | ND | 1.11 | | 1.1 | 0.15 | 1.09 | J | 1.1 |
| Bis(2-Chloroethoxy)methane | 111-91-1 | 5 | ug/l | ND | 1.04 | | 1 | ND | 1.06 | | 1.1 | ND | 1.1 | | 1.1 | ND | 1.05 | | 1 | ND | 1.1 | | 1.1 | ND | 1.11 | | 1.1 | ND | 1.09 | | 1.1 |
| Bis(2-Chloroethyl)ether | 111-44-4 | 55 | ug/l | ND | 1.04 | | 0.21 | ND | 1.06 | | 0.21 | ND | 1.1 | | 0.22 | ND | 1.05 | | 0.21 | ND | 1.1 | | 0.22 | ND | 1.11 | | 0.22 | ND | 1.09 | | 0.22 |
| Bis(2-Chloroisopropyl)ether | 108-60-1 | 30000 | ug/l | ND | 1.04 | | 0.21 | ND | 1.06 | | 0.21 | ND | 1.1 | | 0.22 | ND | 1.05 | | 0.21 | ND | 1.1 | | 0.22 | ND | 1.11 | | 0.22 | ND | 1.09 | | 0.22 |
| Bis(2-Ethylhexyl)phthalate | 117-81-7 | 290 | ug/l | 1.4 | 1.04 | B | 1 | 1.3 | 1.06 | B | 1.1 | 0.47 | 1.1 | J B | 1.1 | 0.61 | 1.05 | J B | 1 | 0.56 | 1.1 | J B | 1.1 | 0.79 | 1.11 | J B | 1.1 | 0.83 | 1.09 | J B | 1.1 |
| 4-Bromophenyl-phenylether | 101-55-3 | 5 | ug/l | ND | 1.04 | | 1 | ND | 1.06 | | 1.1 | ND | 1.1 | | 1.1 | ND | 1.05 | | 1 | ND | 1.1 | | 1.1 | ND | 1.11 | | 1.1 | ND | 1.09 | | 1.1 |
| Butylbenzylphthalate | 85-68-7 | 2700 | ug/l | ND | 1.04 | | 1 | ND | 1.06 | | 1.1 | ND | 1.1 | | 1.1 | ND | 1.05 | | 1 | ND | 1.1 | | 1.1 | 0.53 | 1.11 | J | 1.1 | 1.2 | 1.09 | | 1.1 |
| 4-Chloro-3-methylphenol | 59-50-7 | 510 | ug/l | ND | 1.04 | | 1 | ND | 1.06 | | 1.1 | ND | 1.1 | | 1.1 | ND | 1.05 | | 1 | ND | 1.1 | | 1.1 | ND | 1.11 | | 1.1 | ND | 1.09 | | 1.1 |
| 4-Chloroaniline | 106-47-8 | 410 | ug/l | ND | 1.04 | | 1 | ND | 1.06 | | 1.1 | ND | 1.1 | | 1.1 | ND | 1.05 | | 1 | ND | 1.1 | | 1.1 | ND | 1.11 | | 1.1 | ND | 1.09 | | 1.1 |
| Chlorobenzilate | 510-15-6 | 9600 | ug/l | ND | 1.04 | | 1 | ND | 1.06 | | 1.1 | ND | 1.1 | | 1.1 | ND | 1.05 | | 1 | ND | 1.1 | | 1.1 | ND | 1.11 | | 1.1 | ND | 1.09 | | 1.1 |
| 2-Chloronaphthalene | 91-58-7 | 8200 | ug/l | ND | 1.04 | | 0.21 | ND | 1.06 | | 0.21 | ND | 1.1 | | 0.22 | ND | 1.05 | | 0.21 | ND | 1.1 | | 0.22 | ND | 1.11 | | 0.22 | ND | 1.09 | | 0.22 |
| 2-Chlorophenol | 95-57-8 | 40 | ug/l | ND | 1.04 | | 1 | ND | 1.06 | | 1.1 | ND | 1.1 | | 1.1 | ND | 1.05 | | 1 | ND | 1.1 | | 1.1 | ND | 1.11 | | 1.1 | ND | 1.09 | | 1.1 |
| 4-Chlorophenyl-phenylether | 7005-72-3 | 5 | ug/l | ND | 1.04 | | 1 | ND | 1.06 | | 1.1 | ND | 1.1 | | 1.1 | ND | 1.05 | | 1 | ND | 1.1 | | 1.1 | ND | 1.11 | | 1.1 | ND | 1.09 | | 1.1 |
| Chrysene | 218-01-9 | 1.9 | ug/l | ND | 1.04 | | 0.21 | ND | 1.06 | | 0.21 | ND | 1.1 | | 0.22 | ND | 1.05 | | 0.21 | 0.064 | 1.1 | J | 0.22 | ND | 1.11 | | 0.22 | ND | 1.09 | | 0.22 |
| o-Cresol (2-Methylphenol) | 95-48-7 | 510000 | ug/l | ND | 1.04 | | 1 | ND | 1.06 | | 1.1 | ND | 1.1 | | 1.1 | ND | 1.05 | | 1 | ND | 1.1 | | 1.1 | ND | 1.11 | | 1.1 | ND | 1.09 | | 1.1 |
| Diallate | 2303-16-4 | 1000 | ug/l | ND | 1.04 | | 1 | ND | 1.06 | | 1.1 | ND | 1.1 | | 1.1 | ND | 1.05 | | 1 | ND | 1.1 | | 1.1 | ND | 1.11 | | 1.1 | ND | 1.09 | | 1.1 |
| Dibenz(a,h)anthracene | 53-70-3 | 0.6 | ug/l | ND | 1.04 | | 0.21 | ND | 1.06 | | 0.21 | ND | 1.1 | | 0.22 | ND | 1.05 | | 0.21 | ND | 1.1 | | 0.22 | ND | 1.11 | | 0.22 | ND | 1.09 | | 0.22 |
| Dibenzofuran | 132-64-9 | 5 | ug/l | 0.022 | 1.04 | J B | 1 | 0.039 | 1.06 | J B | 1.1 | 0.044 | 1.1 | J B | 1.1 | 0.036 | 1.05 | J B | 1 | 0.024 | 1.1 | J B | 1.1 | ND | 1.11 | | 1.1 | 0.032 | 1.09 | J B | 1.1 |
| 1,4- Dichlorobenzene | 106-46-7 | 7500 | ug/l | 0.2 | 1.04 | J | 0.21 | 0.21 | 1.06 | | 0.21 | 0.35 | 1.1 | | 0.22 | 0.29 | 1.05 | | 0.21 | ND | 1.1 | | 0.22 | 0.17 | 1.11 | J | 0.22 | 0.21 | 1.09 | J | 0.22 |
| 1,2-Dichlorobenzene | 95-50-1 | 60000 | ug/l | ND | 1.04 | | 0.21 | ND | 1.06 | | 0.21 | ND | 1.1 | | 0.22 | 0.085 | 1.05 | J | 0.21 | ND | 1.1 | | 0.22 | ND | 1.11 | | 0.22 | 0.066 | 1.09 | J | 0.22 |
| 1,3-Dichlorobenzene | 541-73-1 | 60000 | ug/l | ND | 1.04 | | 0.21 | ND | 1.06 | | 0.21 | ND | 1.1 | | 0.22 | ND | 1.05 | | 0.21 | ND | 1.1 | | 0.22 | ND | 1.11 | | 0.22 | ND | 1.09 | | 0.22 |
| 3,3'-Dichlorobenzidine | 91-94-1 | 3100 | ug/l | ND | 1.04 | | 1 | ND | 1.06 | | 1.1 | ND | 1.1 | | 1.1 | ND | 1.05 | | 1 | ND | 1.1 | | 1.1 | ND | 1.11 | | 1.1 | ND | 1.09 | | 1.1 |
| 2,6-Dichlorophenol | 87-65-0 | NS | ug/l | ND | 1.04 | | 0.21 | ND | 1.06 | | 0.21 | ND | 1.1 | | 0.22 | ND | 1.05 | | 0.21 | ND | 1.1 | | 0.22 | ND | 1.11 | | 0.22 | ND | 1.09 | | 0.22 |
| 2,4-Dichlorophenol | 120-83-2 | 20000 | ug/l | ND | 1.04 | | 0.21 | ND | 1.06 | | 0.21 | ND | 1.1 | | 0.22 | ND | 1.05 | | 0.21 | ND | 1.1 | | 0.22 | ND | 1.11 | | 0.22 | ND | 1.09 | | 0.22 |
| Diethylphthalate | 84-66-2 | 1100000 | ug/l | ND | 1.04 | | 1 | 0.1 | 1.06 | J B | 1.1 | 0.08 | 1.1 | J B | 1.1 | 0.094 | 1.05 | J B | 1 | 0.11 | 1.1 | J | 1.1 | 0.38 | 1.11 | J B | 1.1 | 0.21 | 1.09 | J B | 1.1 |
| Dimethoate | 60-51-5 | 20000 | ug/l | ND | 1.04 | | 1 | ND | 1.06 | | 1.1 | ND | 1.1 | | 1.1 | ND | 1.05 | | 1 | ND | 1.1 | | 1.1 | ND | 1.11 | | 1.1 | ND | 1.09 | | 1.1 |
| p-Dimethylaminoazobenzene | 60-11-7 | 570 | ug/l | ND | 1.04 | | 1 | ND | 1.06 | | 1.1 | ND | 1.1 | | 1.1 | ND | 1.05 | | 1 | ND | 1.1 | | 1.1 | 0.55 | 1.11 | J | 1.1 | ND | 1.09 | | 1.1 |
| 7,12-Dimethylbenz(a)anthracene | 57-97-6 | NS | ug/l | ND | 1.04 | | 1 | ND | 1.06 | | 1.1 | ND | 1.1 | | 1.1 | ND | 1.05 | | 1 | ND | 1.1 | | 1.1 | ND | 1.11 | | 1.1 | ND | 1.09 | | 1.1 |
| 3,3'-Dimethylbenzidine | 119-93-7 | 280 | ug/l | ND | 1.04 | | 10 | ND | 1.06 | | 11 | ND | 1.1 | | 11 | ND | 1.05 | | 10 | ND | 1.1 | | 11 | 1.5 | 1.11 | J | 11 | ND | 1.09 | | 11 |
| 2,4-Dimethylphenol | 105-67-9 | 2000000 | ug/l | ND | 1.04 | | 1 | ND | 1.06 | | 1.1 | ND | 1.1 | | 1.1 | ND | 1.05 | | 1 | ND | 1.1 | | 1.1 | ND | 1.11 | | 1.1 | ND | 1.09 | | 1.1 |
| Dimethylphthalate | 131-11-3 | 5 | ug/l | ND | 1.04 | | 1 | ND | 1.06 | | 1.1 | ND | 1.1 | | 1.1 | ND | 1.05 | | 1 | ND | 1.1 | | 1.1 | ND | 1.11 | | 1.1 | ND | 1.09 | | 1.1 |
| Di-n-butylphthalate | 84-74-2 | 400000 | ug/l | 0.1 | 1.04 | J B | 1 | 0.15 | 1.06 | J B | 1.1 | 0.082 | 1.1 | J B | 1.1 | 0.09 | 1.05 | J B | 1 | 0.12 | 1.1 | J B | 1.1 | 0.24 | 1.11 | J B | 1.1 | 0.2 | 1.09 | J B | 1.1 |
| 4,6-Dinitro-2-methylphenol | 534-52-1 | 5 | ug/l | ND | 1.04 | | ***5.2*** | ND | 1.06 | | ***5.3*** | ND | 1.1 | | ***5.5*** | ND | 1.05 | | ***5.2*** | ND | 1.1 | | ***5.5*** | ND | 1.11 | | ***5.6*** | ND | 1.09 | | ***5.4*** |
| 1,3-Dinitrobenzene | 99-65-0 | 1000 | ug/l | ND | 1.04 | | 1 | ND | 1.06 | | 1.1 | ND | 1.1 | | 1.1 | ND | 1.05 | | 1 | ND | 1.1 | | 1.1 | ND | 1.11 | | 1.1 | ND | 1.09 | | 1.1 |
| 2,4-Dinitrophenol | 51-28-5 | 410 | ug/l | ND | 1.04 | | 5.2 | ND | 1.06 | | 5.3 | ND | 1.1 | | 5.5 | ND | 1.05 | | 5.2 | ND | 1.1 | | 5.5 | ND | 1.11 | | 5.6 | ND | 1.09 | | 5.4 |
| 2,4-Dinitrotoluene | 121-14-2 | 8400 | ug/l | ND | 1.04 | | 1 | ND | 1.06 | | 1.1 | ND | 1.1 | | 1.1 | ND | 1.05 | | 1 | ND | 1.1 | | 1.1 | ND | 1.11 | | 1.1 | ND | 1.09 | | 1.1 |
| 2,6-Dinitrotoluene | 606-20-2 | 100000 | ug/l | ND | 1.04 | | 1 | ND | 1.06 | | 1.1 | ND | 1.1 | | 1.1 | ND | 1.05 | | 1 | ND | 1.1 | | 1.1 | ND | 1.11 | | 1.1 | ND | 1.09 | | 1.1 |
| Dinoseb | 88-85-7 | 700 | ug/l | ND | 1.04 | | 1 | ND | 1.06 | | 1.1 | ND | 1.1 | | 1.1 | ND | 1.05 | | 1 | ND | 1.1 | | 1.1 | ND | 1.11 | | 1.1 | ND | 1.09 | | 1.1 |
| Disulfoton | 298-04-4 | 30 | ug/l | ND | 1.04 | | 1 | ND | 1.06 | | 1.1 | ND | 1.1 | | 1.1 | ND | 1.05 | | 1 | ND | 1.1 | | 1.1 | ND | 1.11 | | 1.1 | ND | 1.09 | | 1.1 |
| Ethyl methanesulfonate | 62-50-0 | 5 | ug/l | ND | 1.04 | | 1 | ND | 1.06 | | 1.1 | ND | 1.1 | | 1.1 | ND | 1.05 | | 1 | ND | 1.1 | | 1.1 | ND | 1.11 | | 1.1 | ND | 1.09 | | 1.1 |
| Famphur | 52-85-7 | 5 | ug/l | ND | 1.04 | | ***10*** | ND | 1.06 | | ***11*** | ND | 1.1 | | ***11*** | ND | 1.05 | | ***10*** | ND | 1.1 | | ***11*** | ND | 1.11 | | ***11*** | ND | 1.09 | | ***11*** |
| Fluoranthene | 206-44-0 | 260 | ug/l | ND | 1.04 | | 0.21 | 0.031 | 1.06 | J | 0.21 | 0.021 | 1.1 | J | 0.22 | 0.029 | 1.05 | J | 0.21 | ND | 1.1 | | 0.22 | 0.023 | 1.11 | J | 0.22 | ND | 1.09 | | 0.22 |
| Fluorene | 86-73-7 | 1900 | ug/l | 0.016 | 1.04 | J | 0.21 | 0.053 | 1.06 | J | 0.21 | 0.038 | 1.1 | J | 0.22 | 0.035 | 1.05 | J | 0.21 | ND | 1.1 | | 0.22 | ND | 1.11 | | 0.22 | 0.024 | 1.09 | J | 0.22 |
| Hexachlorobenzene | 118-74-1 | 6 | ug/l | ND | 1.04 | | 0.21 | ND | 1.06 | | 0.21 | ND | 1.1 | | 0.22 | ND | 1.05 | | 0.21 | ND | 1.1 | | 0.22 | ND | 1.11 | | 0.22 | ND | 1.09 | | 0.22 |
| Hexachlorobutadiene | 87-68-3 | 1000 | ug/l | ND | 1.04 | | 0.21 | ND | 1.06 | | 0.21 | ND | 1.1 | | 0.22 | ND | 1.05 | | 0.21 | ND | 1.1 | | 0.22 | ND | 1.11 | | 0.22 | ND | 1.09 | | 0.22 |
| Hexachlorocyclopentadiene | 77-47-4 | 1800 | ug/l | ND | 1.04 | | 1 | ND | 1.06 | | 1.1 | ND | 1.1 | | 1.1 | ND | 1.05 | | 1 | ND | 1.1 | | 1.1 | ND | 1.11 | | 1.1 | ND | 1.09 | | 1.1 |

**Table 6**
**Summary of Groundwater Analytical Results - June 2009**
**Comparison to Pennsylvania Non-Residential Non-Use Aquifer Groundwater MSCs**
**U.S. Steel - RCRA Groundwater Sampling**
**Fairless Hills, Pennsylvania**

| | CAS No | PADEP Non-Residential Non-Use Aquifer GW MSC | Location ID | MW2-03-33 | | | | MW3-02-27 | | | | MW3-02-27 | | | | MW3-12-31 | | | | MW3-29-29 | | | | MW4-02-24 | | | | MW4-10-23 | | | | MW4-11-33 | | | |
|---|---|---|---|---|---|---|---|---|---|---|---|---|---|---|---|---|---|---|---|---|---|---|---|---|---|---|---|---|---|---|---|---|---|---|---|
| | | | Sample ID | MW2-03-33_061909 | | | | MW3-02-27_061809 | | | | DUP-01_061809 | | | | MW3-12-31_061909 | | | | MW3-29-29_061809 | | | | MW4-02-24_061809 | | | | MW4-10-23_061709 | | | | MW4-11-33_061909 | | | |
| | | | Sample Date | 6/19/2009 | | | | 6/18/2009 | | | | 6/18/2009 | | | | 6/19/2009 | | | | 6/18/2009 | | | | 6/18/2009 | | | | 6/17/2009 | | | | 6/19/2009 | | | |
| | | | Lab Id | C9F200181010 | | | | C9F190331001 | | | | C9F190331002 | | | | C9F200181002 | | | | C9F190331003 | | | | C9F190331014 | | | | C9F180195004 | | | | C9F200181003 | | | |
| ***RCRA APPENDIX IX SEMI-VOLATILE ORGANIC COMPOUNDS (Method 8270)*** | | | | Result | DF | Q | RL | Result | DF | Q | RL | Result | DF | Q | RL | Result | DF | Q | RL | Result | DF | Q | RL | Result | DF | Q | RL | Result | DF | Q | RL | Result | DF | Q | RL |
| 2-Acetylaminofluorene (2AAF) | 53-96-3 | 680 | ug/l | ND | 1.08 | | 1.1 | ND | 1.04 | | 1 | ND | 1.04 | | 1 | ND | 1.05 | | 1 | ND | 1.1 | | 1.1 | ND | 1.12 | | 1.1 | ND | 1.12 | | 1.1 | ND | 1.04 | | 1 |
| a,a-Dimethylphenethylamine | 122-09-8 | 5 | ug/l | ND | 1.08 | | 1.1 | ND | 1.04 | | 1 | ND | 1.04 | | 1 | ND | 1.05 | | 1 | ND | 1.1 | | 1.1 | ND | 1.12 | | 1.1 | ND | 1.12 | | 1.1 | ND | 1.04 | | 1 |
| Acenaphthene | 83-32-9 | 3800 | ug/l | 0.031 | 1.08 | J B | 0.22 | 3.7 | 1.04 | | 0.21 | 3.7 | 1.04 | | 0.21 | 0.21 | 1.05 | B | 0.21 | 0.12 | 1.1 | J | 0.22 | 0.032 | 1.12 | J | 0.22 | ND | 1.12 | | 0.22 | 0.034 | 1.04 | J B | 0.21 |
| Acenaphthylene | 208-96-8 | 16000 | ug/l | ND | 1.08 | | 0.22 | 0.069 | 1.04 | J | 0.21 | 0.085 | 1.04 | J | 0.21 | ND | 1.05 | | 0.21 | 0.096 | 1.1 | J | 0.22 | ND | 1.12 | | 0.22 | ND | 1.12 | | 0.22 | ND | 1.04 | | 0.21 |
| Acetophenone | 98-86-2 | 10000 | ug/l | 0.024 | 1.08 | J | 1.1 | 0.047 | 1.04 | J | 1 | 0.046 | 1.04 | J | 1 | 0.089 | 1.05 | J | 1 | ND | 1.1 | | 1.1 | 0.054 | 1.12 | J | 1.1 | ND | 1.12 | | 1.1 | ND | 1.04 | | 1 |
| 4-Aminobiphenyl | 92-67-1 | 120 | ug/l | ND | 1.08 | | 1.1 | ND | 1.04 | | 1 | ND | 1.04 | | 1 | ND | 1.05 | | 1 | ND | 1.1 | | 1.1 | ND | 1.12 | | 1.1 | ND | 1.12 | | 1.1 | ND | 1.04 | | 1 |
| Aniline | 62-53-3 | 5.8 | ug/l | ND | 1.08 | | 1.1 | 0.35 | 1.04 | J | 1 | 0.37 | 1.04 | J | 1 | 0.058 | 1.05 | J | 1 | ND | 1.1 | | 1.1 | ND | 1.12 | | 1.1 | ND | 1.12 | | 1.1 | ND | 1.04 | | 1 |
| Anthracene | 120-12-7 | 66 | ug/l | ND | 1.08 | | 0.22 | 0.13 | 1.04 | J | 0.21 | 0.12 | 1.04 | J | 0.21 | ND | 1.05 | | 0.21 | 0.017 | 1.1 | J | 0.22 | 0.47 | 1.12 | | 0.22 | ND | 1.12 | | 0.22 | ND | 1.04 | | 0.21 |
| Aramite | 140-57-8 | NS | ug/l | ND | 1.08 | | 1.1 | ND | 1.04 | | 1 | ND | 1.04 | | 1 | ND | 1.05 | | 1 | ND | 1.1 | | 1.1 | ND | 1.12 | | 1.1 | ND | 1.12 | | 1.1 | ND | 1.04 | | 1 |
| Benzo(a)anthracene | 56-55-3 | 11 | ug/l | ND | 1.08 | | 0.22 | 0.16 | 1.04 | J | 0.21 | 0.14 | 1.04 | J | 0.21 | ND | 1.05 | | 0.21 | 0.057 | 1.1 | J | 0.22 | 2.7 | 1.12 | | 0.22 | ND | 1.12 | | 0.22 | ND | 1.04 | | 0.21 |
| Benzo(a)pyrene | 50-32-8 | 3.8 | ug/l | ND | 1.08 | | 0.22 | 0.94 | 1.04 | | 0.21 | 0.9 | 1.04 | | 0.21 | ND | 1.05 | | 0.21 | 0.97 | 1.1 | | 0.22 | 2.4 | 1.12 | | 0.22 | ND | 1.12 | | 0.22 | ND | 1.04 | | 0.21 |
| Benzo(b)fluoranthene | 205-99-2 | 1.2 | ug/l | ND | 1.08 | | 0.22 | ND | 1.04 | | 0.21 | ND | 1.04 | | 0.21 | ND | 1.05 | | 0.21 | 0.025 | 1.1 | J | 0.22 | **2.8** | 1.12 | | 0.22 | ND | 1.12 | | 0.22 | ND | 1.04 | | 0.21 |
| Benzo(ghi)perylene | 191-24-2 | 0.26 | ug/l | ND | 1.08 | | 0.22 | ND | 1.04 | | 0.21 | ND | 1.04 | | 0.21 | ND | 1.05 | | 0.21 | **0.87** | 1.1 | | 0.22 | **3.4** | 1.12 | | 0.22 | ND | 1.12 | | 0.22 | ND | 1.04 | | 0.21 |
| Benzo(k)fluoranthene | 207-08-9 | 0.55 | ug/l | ND | 1.08 | | 0.22 | 0.046 | 1.04 | J | 0.21 | 0.03 | 1.04 | J | 0.21 | ND | 1.05 | | 0.21 | 0.1 | 1.1 | J | 0.22 | **2.5** | 1.12 | | 0.22 | ND | 1.12 | | 0.22 | ND | 1.04 | | 0.21 |
| Benzyl alcohol | 100-51-6 | 31000 | ug/l | ND | 1.08 | | 1.1 | ND | 1.04 | | 1 | ND | 1.04 | | 1 | ND | 1.05 | | 1 | ND | 1.1 | | 1.1 | 0.13 | 1.12 | J | 1.1 | 0.19 | 1.12 | J | 1.1 | ND | 1.04 | | 1 |
| Bis(2-Chloroethoxy)methane | 111-91-1 | 5 | ug/l | ND | 1.08 | | 1.1 | ND | 1.04 | | 1 | ND | 1.04 | | 1 | ND | 1.05 | | 1 | ND | 1.1 | | 1.1 | ND | 1.12 | | 1.1 | ND | 1.12 | | 1.1 | ND | 1.04 | | 1 |
| Bis(2-Chloroethyl)ether | 111-44-4 | 55 | ug/l | ND | 1.08 | | 0.22 | ND | 1.04 | | 0.21 | ND | 1.04 | | 0.21 | ND | 1.05 | | 0.21 | ND | 1.1 | | 0.22 | ND | 1.12 | | 0.22 | ND | 1.12 | | 0.22 | ND | 1.04 | | 0.21 |
| Bis(2-Chloroisopropyl)ether | 108-60-1 | 30000 | ug/l | ND | 1.08 | | 0.22 | ND | 1.04 | | 0.21 | ND | 1.04 | | 0.21 | ND | 1.05 | | 0.21 | ND | 1.1 | | 0.22 | ND | 1.12 | | 0.22 | ND | 1.12 | | 0.22 | ND | 1.04 | | 0.21 |
| Bis(2-Ethylhexyl)phthalate | 117-81-7 | 290 | ug/l | 1.1 | 1.08 | B | 1.1 | 1.6 | 1.04 | B | 1 | 0.91 | 1.04 | J B | 1 | 2.1 | 1.05 | B | 1 | 2.3 | 1.1 | B | 1.1 | 2.3 | 1.12 | B | 1.1 | 1.6 | 1.12 | B | 1.1 | 0.69 | 1.04 | J B | 1 |
| 4-Bromophenyl-phenylether | 101-55-3 | 5 | ug/l | ND | 1.08 | | 1.1 | ND | 1.04 | | 1 | ND | 1.04 | | 1 | ND | 1.05 | | 1 | ND | 1.1 | | 1.1 | ND | 1.12 | | 1.1 | ND | 1.12 | | 1.1 | ND | 1.04 | | 1 |
| Butylbenzylphthalate | 85-68-7 | 2700 | ug/l | ND | 1.08 | | 1.1 | ND | 1.04 | | 1 | ND | 1.04 | | 1 | ND | 1.05 | | 1 | ND | 1.1 | | 1.1 | 1.9 | 1.12 | | 1.1 | 0.58 | 1.12 | J B | 1.1 | ND | 1.04 | | 1 |
| 4-Chloro-3-methylphenol | 59-50-7 | 510 | ug/l | ND | 1.08 | | 1.1 | ND | 1.04 | | 1 | ND | 1.04 | | 1 | ND | 1.05 | | 1 | ND | 1.1 | | 1.1 | ND | 1.12 | | 1.1 | ND | 1.12 | | 1.1 | ND | 1.04 | | 1 |
| 4-Chloroaniline | 106-47-8 | 410 | ug/l | ND | 1.08 | | 1.1 | ND | 1.04 | | 1 | ND | 1.04 | | 1 | ND | 1.05 | | 1 | ND | 1.1 | | 1.1 | ND | 1.12 | | 1.1 | ND | 1.12 | | 1.1 | ND | 1.04 | | 1 |
| Chlorobenzilate | 510-15-6 | 9600 | ug/l | ND | 1.08 | | 1.1 | ND | 1.04 | | 1 | ND | 1.04 | | 1 | ND | 1.05 | | 1 | ND | 1.1 | | 1.1 | ND | 1.12 | | 1.1 | ND | 1.12 | | 1.1 | ND | 1.04 | | 1 |
| 2-Chloronaphthalene | 91-58-7 | 8200 | ug/l | ND | 1.08 | | 0.22 | ND | 1.04 | | 0.21 | ND | 1.04 | | 0.21 | ND | 1.05 | | 0.21 | ND | 1.1 | | 0.22 | ND | 1.12 | | 0.22 | ND | 1.12 | | 0.22 | ND | 1.04 | | 0.21 |
| 2-Chlorophenol | 95-57-8 | 40 | ug/l | ND | 1.08 | | 1.1 | ND | 1.04 | | 1 | ND | 1.04 | | 1 | ND | 1.05 | | 1 | ND | 1.1 | | 1.1 | ND | 1.12 | | 1.1 | ND | 1.12 | | 1.1 | ND | 1.04 | | 1 |
| 4-Chlorophenyl-phenylether | 7005-72-3 | 5 | ug/l | ND | 1.08 | | 1.1 | ND | 1.04 | | 1 | ND | 1.04 | | 1 | ND | 1.05 | | 1 | ND | 1.1 | | 1.1 | ND | 1.12 | | 1.1 | ND | 1.12 | | 1.1 | ND | 1.04 | | 1 |
| Chrysene | 218-01-9 | 1.9 | ug/l | ND | 1.08 | | 0.22 | 0.18 | 1.04 | J | 0.21 | 0.13 | 1.04 | J | 0.21 | ND | 1.05 | | 0.21 | 0.12 | 1.1 | J | 0.22 | **2.8** | 1.12 | | 0.22 | ND | 1.12 | | 0.22 | ND | 1.04 | | 0.21 |
| o-Cresol (2-Methylphenol) | 95-48-7 | 510000 | ug/l | ND | 1.08 | | 1.1 | ND | 1.04 | | 1 | ND | 1.04 | | 1 | 0.079 | 1.05 | J | 1 | ND | 1.1 | | 1.1 | ND | 1.12 | | 1.1 | ND | 1.12 | | 1.1 | ND | 1.04 | | 1 |
| Diallate | 2303-16-4 | 1000 | ug/l | ND | 1.08 | | 1.1 | ND | 1.04 | | 1 | ND | 1.04 | | 1 | ND | 1.05 | | 1 | ND | 1.1 | | 1.1 | ND | 1.12 | | 1.1 | ND | 1.12 | | 1.1 | ND | 1.04 | | 1 |
| Dibenz(a,h)anthracene | 53-70-3 | 0.6 | ug/l | ND | 1.08 | | 0.22 | ND | 1.04 | | 0.21 | ND | 1.04 | | 0.21 | ND | 1.05 | | 0.21 | **1.4** | 1.1 | | 0.22 | **3.8** | 1.12 | | 0.22 | ND | 1.12 | | 0.22 | ND | 1.04 | | 0.21 |
| Dibenzofuran | 132-64-9 | 5 | ug/l | 0.038 | 1.08 | J B | 1.1 | 0.049 | 1.04 | J B | 1 | 0.04 | 1.04 | J B | 1 | 0.094 | 1.05 | J B | 1 | 0.039 | 1.1 | J B | 1.1 | 0.062 | 1.12 | J B | 1.1 | 0.021 | 1.12 | J B | 1.1 | 0.037 | 1.04 | J B | 1 |
| 1,4- Dichlorobenzene | 106-46-7 | 7500 | ug/l | 0.33 | 1.08 | | 0.22 | 0.2 | 1.04 | J | 0.21 | 0.25 | 1.04 | | 0.21 | 0.27 | 1.05 | | 0.21 | 0.22 | 1.1 | | 0.22 | 0.28 | 1.12 | | 0.22 | 0.12 | 1.12 | J | 0.22 | 0.35 | 1.04 | | 0.21 |
| 1,2-Dichlorobenzene | 95-50-1 | 60000 | ug/l | 0.074 | 1.08 | J | 0.22 | ND | 1.04 | | 0.21 | ND | 1.04 | | 0.21 | 0.07 | 1.05 | J | 0.21 | ND | 1.1 | | 0.22 | 0.082 | 1.12 | J | 0.22 | ND | 1.12 | | 0.22 | 0.12 | 1.04 | J | 0.21 |
| 1,3-Dichlorobenzene | 541-73-1 | 60000 | ug/l | ND | 1.08 | | 0.22 | ND | 1.04 | | 0.21 | ND | 1.04 | | 0.21 | ND | 1.05 | | 0.21 | ND | 1.1 | | 0.22 | ND | 1.12 | | 0.22 | ND | 1.12 | | 0.22 | ND | 1.04 | | 0.21 |
| 3,3'-Dichlorobenzidine | 91-94-1 | 3100 | ug/l | ND | 1.08 | | 1.1 | ND | 1.04 | | 1 | ND | 1.04 | | 1 | ND | 1.05 | | 1 | ND | 1.1 | | 1.1 | ND | 1.12 | | 1.1 | ND | 1.12 | | 1.1 | ND | 1.04 | | 1 |
| 2,6-Dichlorophenol | 87-65-0 | NS | ug/l | ND | 1.08 | | 0.22 | ND | 1.04 | | 0.21 | ND | 1.04 | | 0.21 | ND | 1.05 | | 0.21 | ND | 1.1 | | 0.22 | ND | 1.12 | | 0.22 | ND | 1.12 | | 0.22 | ND | 1.04 | | 0.21 |
| 2,4-Dichlorophenol | 120-83-2 | 20000 | ug/l | ND | 1.08 | | 0.22 | ND | 1.04 | | 0.21 | ND | 1.04 | | 0.21 | ND | 1.05 | | 0.21 | ND | 1.1 | | 0.22 | ND | 1.12 | | 0.22 | ND | 1.12 | | 0.22 | ND | 1.04 | | 0.21 |
| Diethylphthalate | 84-66-2 | 1100000 | ug/l | 0.2 | 1.08 | J B | 1.1 | 0.1 | 1.04 | J B | 1 | 0.065 | 1.04 | J B | 1 | 0.077 | 1.05 | J B | 1 | ND | 1.1 | | 1.1 | 0.22 | 1.12 | J B | 1.1 | 0.13 | 1.12 | J | 1.1 | 0.37 | 1.04 | J B | 1 |
| Dimethoate | 60-51-5 | 20000 | ug/l | ND | 1.08 | | 1.1 | ND | 1.04 | | 1 | ND | 1.04 | | 1 | ND | 1.05 | | 1 | ND | 1.1 | | 1.1 | ND | 1.12 | | 1.1 | ND | 1.12 | | 1.1 | ND | 1.04 | | 1 |
| p-Dimethylaminoazobenzene | 60-11-7 | 570 | ug/l | ND | 1.08 | | 1.1 | ND | 1.04 | | 1 | ND | 1.04 | | 1 | ND | 1.05 | | 1 | ND | 1.1 | | 1.1 | ND | 1.12 | | 1.1 | ND | 1.12 | | 1.1 | ND | 1.04 | | 1 |
| 7,12-Dimethylbenz(a)anthracene | 57-97-6 | NS | ug/l | ND | 1.08 | | 1.1 | ND | 1.04 | | 1 | ND | 1.04 | | 1 | ND | 1.05 | | 1 | ND | 1.1 | | 1.1 | ND | 1.12 | | 1.1 | ND | 1.12 | | 1.1 | ND | 1.04 | | 1 |
| 3,3'-Dimethylbenzidine | 119-93-7 | 280 | ug/l | ND | 1.08 | | 11 | ND | 1.04 | | 10 | ND | 1.04 | | 10 | ND | 1.05 | | 10 | ND | 1.1 | | 11 | ND | 1.12 | | 11 | ND | 1.12 | | 11 | ND | 1.04 | | 10 |
| 2,4-Dimethylphenol | 105-67-9 | 2000000 | ug/l | ND | 1.08 | | 1.1 | 0.086 | 1.04 | J | 1 | ND | 1.04 | | 1 | 0.14 | 1.05 | J | 1 | ND | 1.1 | | 1.1 | 0.046 | 1.12 | J | 1.1 | ND | 1.12 | | 1.1 | ND | 1.04 | | 1 |
| Dimethylphthalate | 131-11-3 | 5 | ug/l | ND | 1.08 | | 1.1 | ND | 1.04 | | 1 | ND | 1.04 | | 1 | ND | 1.05 | | 1 | ND | 1.1 | | 1.1 | ND | 1.12 | | 1.1 | ND | 1.12 | | 1.1 | ND | 1.04 | | 1 |
| Di-n-butylphthalate | 84-74-2 | 400000 | ug/l | 0.093 | 1.08 | J B | 1.1 | 0.12 | 1.04 | J B | 1 | 0.091 | 1.04 | J B | 1 | 0.082 | 1.05 | J B | 1 | ND | 1.1 | | 1.1 | 0.47 | 1.12 | J B | 1.1 | 0.16 | 1.12 | J B | 1.1 | 0.099 | 1.04 | J B | 1 |
| 4,6-Dinitro-2-methylphenol | 534-52-1 | 5 | ug/l | ND | 1.08 | | ***5.4*** | ND | 1.04 | | ***5.2*** | ND | 1.04 | | ***5.2*** | ND | 1.05 | | ***5.2*** | ND | 1.1 | | ***5.5*** | ND | 1.12 | | ***5.6*** | ND | 1.12 | | ***5.6*** | ND | 1.04 | | ***5.2*** |
| 1,3-Dinitrobenzene | 99-65-0 | 1000 | ug/l | ND | 1.08 | | 1.1 | ND | 1.04 | | 1 | ND | 1.04 | | 1 | ND | 1.05 | | 1 | ND | 1.1 | | 1.1 | ND | 1.12 | | 1.1 | ND | 1.12 | | 1.1 | ND | 1.04 | | 1 |
| 2,4-Dinitrophenol | 51-28-5 | 410 | ug/l | ND | 1.08 | | 5.4 | ND | 1.04 | | 5.2 | ND | 1.04 | | 5.2 | ND | 1.05 | | 5.2 | ND | 1.1 | | 5.5 | ND | 1.12 | | 5.6 | ND | 1.12 | | 5.6 | ND | 1.04 | | 5.2 |
| 2,4-Dinitrotoluene | 121-14-2 | 8400 | ug/l | ND | 1.08 | | 1.1 | ND | 1.04 | | 1 | ND | 1.04 | | 1 | ND | 1.05 | | 1 | ND | 1.1 | | 1.1 | ND | 1.12 | | 1.1 | ND | 1.12 | | 1.1 | ND | 1.04 | | 1 |
| 2,6-Dinitrotoluene | 606-20-2 | 100000 | ug/l | ND | 1.08 | | 1.1 | ND | 1.04 | | 1 | ND | 1.04 | | 1 | ND | 1.05 | | 1 | ND | 1.1 | | 1.1 | ND | 1.12 | | 1.1 | ND | 1.12 | | 1.1 | ND | 1.04 | | 1 |
| Dinoseb | 88-85-7 | 700 | ug/l | ND | 1.08 | | 1.1 | ND | 1.04 | | 1 | ND | 1.04 | | 1 | ND | 1.05 | | 1 | ND | 1.1 | | 1.1 | ND | 1.12 | | 1.1 | ND | 1.12 | | 1.1 | ND | 1.04 | | 1 |
| Disulfoton | 298-04-4 | 30 | ug/l | ND | 1.08 | | 1.1 | ND | 1.04 | | 1 | ND | 1.04 | | 1 | ND | 1.05 | | 1 | ND | 1.1 | | 1.1 | ND | 1.12 | | 1.1 | ND | 1.12 | | 1.1 | ND | 1.04 | | 1 |
| Ethyl methanesulfonate | 62-50-0 | 5 | ug/l | ND | 1.08 | | 1.1 | ND | 1.04 | | 1 | ND | 1.04 | | 1 | ND | 1.05 | | 1 | ND | 1.1 | | 1.1 | ND | 1.12 | | 1.1 | ND | 1.12 | | 1.1 | ND | 1.04 | | 1 |
| Famphur | 52-85-7 | 5 | ug/l | ND | 1.08 | | ***11*** | ND | 1.04 | | ***10*** | ND | 1.04 | | ***10*** | ND | 1.05 | | ***10*** | ND | 1.1 | | ***11*** | ND | 1.12 | | ***11*** | ND | 1.12 | | ***11*** | ND | 1.04 | | ***10*** |
| Fluoranthene | 206-44-0 | 260 | ug/l | 0.025 | 1.08 | J | 0.22 | 0.18 | 1.04 | J | 0.21 | 0.18 | 1.04 | J | 0.21 | 0.1 | 1.05 | J | 0.21 | 0.035 | 1.1 | J | 0.22 | 0.68 | 1.12 | | 0.22 | ND | 1.12 | | 0.22 | 0.033 | 1.04 | J | 0.21 |
| Fluorene | 86-73-7 | 1900 | ug/l | 0.035 | 1.08 | J | 0.22 | 0.15 | 1.04 | J | 0.21 | 0.15 | 1.04 | J | 0.21 | 0.11 | 1.05 | J | 0.21 | 0.021 | 1.1 | J | 0.22 | 0.11 | 1.12 | J | 0.22 | ND | 1.12 | | 0.22 | 0.037 | 1.04 | J | 0.21 |
| Hexachlorobenzene | 118-74-1 | 6 | ug/l | ND | 1.08 | | 0.22 | ND | 1.04 | | 0.21 | ND | 1.04 | | 0.21 | ND | 1.05 | | 0.21 | ND | 1.1 | | 0.22 | 0.25 | 1.12 | | 0.22 | ND | 1.12 | | 0.22 | ND | 1.04 | | 0.21 |
| Hexachlorobutadiene | 87-68-3 | 1000 | ug/l | ND | 1.08 | | 0.22 | ND | 1.04 | | 0.21 | ND | 1.04 | | 0.21 | ND | 1.05 | | 0.21 | ND | 1.1 | | 0.22 | ND | 1.12 | | 0.22 | ND | 1.12 | | 0.22 | ND | 1.04 | | 0.21 |
| Hexachlorocyclopentadiene | 77-47-4 | 1800 | ug/l | ND | 1.08 | | 1.1 | ND | 1.04 | | 1 | ND | 1.04 | | 1 | ND | 1.05 | | 1 | ND | 1.1 | | 1.1 | ND | 1.12 | | 1.1 | ND | 1.12 | | 1.1 | ND | 1.04 | | 1 |

**Table 6**
**Summary of Groundwater Analytical Results - June 2009**
**Comparison to Pennsylvania Non-Residential Non-Use Aquifer Groundwater MSCs**
**U.S. Steel - RCRA Groundwater Sampling**
**Fairless Hills, Pennsylvania**

| | CAS No | PADEP Non-Residential Non-Use Aquifer GW MSC | Location ID<br>Sample ID<br>Sample Date<br>Lab Id | MW4-14-36<br>MW4-14-36_061909<br>6/19/2009<br>C9F200181006 | | | | MW4-30-63<br>MW4-30-63_061909<br>6/19/2009<br>C9F200181012 | | | | MW4-30-63<br>DUP-02_061909<br>6/19/2009<br>C9F200181013 | | | | MW4-33-25<br>MW4-33-25_061909<br>6/19/2009<br>C9F200181011 | | | | MW5-07-24<br>MW5-07-24_061809<br>6/18/2009<br>C9F190331005 | | | | MW5-18-26<br>MW5-18-26_061709<br>6/17/2009<br>C9F180195002 | | | | MW5-41-19<br>MW5-41-19_061709<br>6/17/2009<br>C9F180195001 | | | | MW6-02-27<br>MW6-02-27_061909<br>6/19/2009<br>C9F200181004 | | | |
|---|---|---|---|---|---|---|---|---|---|---|---|---|---|---|---|---|---|---|---|---|---|---|---|---|---|---|---|---|---|---|---|---|---|
| ***RCRA APPENDIX IX SEMI-VOLATILE ORGANIC COMPOUNDS (Method 8270)*** | | | | Result | DF | Q | RL | Result | DF | Q | RL | Result | DF | Q | RL | Result | DF | Q | RL | Result | DF | Q | RL | Result | DF | Q | RL | Result | DF | Q | RL | Result | DF | Q | RL |
| 2-Acetylaminofluorene (2AAF) | 53-96-3 | 680 | ug/l | ND | 1.14 | | 1.1 | ND | 1.09 | | 1.1 | ND | 1.09 | | 1.1 | ND | 1.09 | | 1.1 | ND | 1.05 | | 1 | ND | 1.05 | | 1 | ND | 1.04 | | 1 | ND | 1.05 | | 1 |
| a,a-Dimethylphenethylamine | 122-09-8 | 5 | ug/l | ND | 1.14 | | 1.1 | ND | 1.09 | | 1.1 | ND | 1.09 | | 1.1 | ND | 1.09 | | 1.1 | ND | 1.05 | | 1 | ND | 1.05 | | 1 | ND | 1.04 | | 1 | ND | 1.05 | | 1 |
| Acenaphthene | 83-32-9 | 3800 | ug/l | 0.044 | 1.14 | J B | 0.23 | ND | 1.09 | | 0.22 | ND | 1.09 | | 0.22 | 1.7 | 1.09 | B | 0.22 | 0.47 | 1.05 | | 0.21 | 0.096 | 1.05 | J | 0.21 | ND | 1.04 | | 0.21 | 0.032 | 1.05 | J B | 0.21 |
| Acenaphthylene | 208-96-8 | 16000 | ug/l | ND | 1.14 | | 0.23 | ND | 1.09 | | 0.22 | ND | 1.09 | | 0.22 | ND | 1.09 | | 0.22 | 0.47 | 1.05 | | 0.21 | 0.041 | 1.05 | J | 0.21 | ND | 1.04 | | 0.21 | ND | 1.05 | | 0.21 |
| Acetophenone | 98-86-2 | 10000 | ug/l | ND | 1.14 | | 1.1 | 0.037 | 1.09 | J | 1.1 | 0.054 | 1.09 | J | 1.1 | 0.045 | 1.09 | J | 1.1 | 0.099 | 1.05 | J | 1 | 0.045 | 1.05 | J | 1 | ND | 1.04 | | 1 | 0.026 | 1.05 | J | 1 |
| 4-Aminobiphenyl | 92-67-1 | 120 | ug/l | ND | 1.14 | | 1.1 | ND | 1.09 | | 1.1 | ND | 1.09 | | 1.1 | ND | 1.09 | | 1.1 | ND | 1.05 | | 1 | ND | 1.05 | | 1 | ND | 1.04 | | 1 | ND | 1.05 | | 1 |
| Aniline | 62-53-3 | 5.8 | ug/l | ND | 1.14 | | 1.1 | ND | 1.09 | | 1.1 | ND | 1.09 | | 1.1 | ND | 1.09 | | 1.1 | 0.9 | 1.05 | J | 1 | 0.35 | 1.05 | J | 1 | ND | 1.04 | | 1 | ND | 1.05 | | 1 |
| Anthracene | 120-12-7 | 66 | ug/l | ND | 1.14 | | 0.23 | ND | 1.09 | | 0.22 | ND | 1.09 | | 0.22 | 0.029 | 1.09 | J | 0.22 | ND | 1.05 | | 0.21 | ND | 1.05 | | 0.21 | ND | 1.04 | | 0.21 | 0.031 | 1.05 | J | 0.21 |
| Aramite | 140-57-8 | NS | ug/l | ND | 1.14 | | 1.1 | ND | 1.09 | | 1.1 | ND | 1.09 | | 1.1 | ND | 1.09 | | 1.1 | ND | 1.05 | | 1 | ND | 1.05 | | 1 | ND | 1.04 | | 1 | ND | 1.05 | | 1 |
| Benzo(a)anthracene | 56-55-3 | 11 | ug/l | ND | 1.14 | | 0.23 | ND | 1.09 | | 0.22 | ND | 1.09 | | 0.22 | ND | 1.09 | | 0.22 | ND | 1.05 | | 0.21 | ND | 1.05 | | 0.21 | ND | 1.04 | | 0.21 | 0.071 | 1.05 | J | 0.21 |
| Benzo(a)pyrene | 50-32-8 | 3.8 | ug/l | ND | 1.14 | | 0.23 | ND | 1.09 | | 0.22 | ND | 1.09 | | 0.22 | ND | 1.09 | | 0.22 | ND | 1.05 | | 0.21 | ND | 1.05 | | 0.21 | ND | 1.04 | | 0.21 | ND | 1.05 | | 0.21 |
| Benzo(b)fluoranthene | 205-99-2 | 1.2 | ug/l | ND | 1.14 | | 0.23 | ND | 1.09 | | 0.22 | ND | 1.09 | | 0.22 | ND | 1.09 | | 0.22 | ND | 1.05 | | 0.21 | ND | 1.05 | | 0.21 | ND | 1.04 | | 0.21 | ND | 1.05 | | 0.21 |
| Benzo(ghi)perylene | 191-24-2 | 0.26 | ug/l | ND | 1.14 | | 0.23 | ND | 1.09 | | 0.22 | ND | 1.09 | | 0.22 | ND | 1.09 | | 0.22 | ND | 1.05 | | 0.21 | ND | 1.05 | | 0.21 | ND | 1.04 | | 0.21 | ND | 1.05 | | 0.21 |
| Benzo(k)fluoranthene | 207-08-9 | 0.55 | ug/l | ND | 1.14 | | 0.23 | ND | 1.09 | | 0.22 | ND | 1.09 | | 0.22 | ND | 1.09 | | 0.22 | ND | 1.05 | | 0.21 | ND | 1.05 | | 0.21 | ND | 1.04 | | 0.21 | ND | 1.05 | | 0.21 |
| Benzyl alcohol | 100-51-6 | 31000 | ug/l | ND | 1.14 | | 1.1 | ND | 1.09 | | 1.1 | ND | 1.09 | | 1.1 | 0.19 | 1.09 | J | 1.1 | ND | 1.05 | | 1 | ND | 1.05 | | 1 | ND | 1.04 | | 1 | ND | 1.05 | | 1 |
| Bis(2-Chloroethoxy)methane | 111-91-1 | 5 | ug/l | ND | 1.14 | | 1.1 | ND | 1.09 | | 1.1 | ND | 1.09 | | 1.1 | ND | 1.09 | | 1.1 | ND | 1.05 | | 1 | ND | 1.05 | | 1 | ND | 1.04 | | 1 | ND | 1.05 | | 1 |
| Bis(2-Chloroethyl)ether | 111-44-4 | 55 | ug/l | ND | 1.14 | | 0.23 | ND | 1.09 | | 0.22 | ND | 1.09 | | 0.22 | ND | 1.09 | | 0.22 | ND | 1.05 | | 0.21 | ND | 1.05 | | 0.21 | ND | 1.04 | | 0.21 | ND | 1.05 | | 0.21 |
| Bis(2-Chloroisopropyl)ether | 108-60-1 | 30000 | ug/l | ND | 1.14 | | 0.23 | ND | 1.09 | | 0.22 | ND | 1.09 | | 0.22 | ND | 1.09 | | 0.22 | ND | 1.05 | | 0.21 | ND | 1.05 | | 0.21 | ND | 1.04 | | 0.21 | ND | 1.05 | | 0.21 |
| Bis(2-Ethylhexyl)phthalate | 117-81-7 | 290 | ug/l | 1.6 | 1.14 | B | 1.1 | 1.8 | 1.09 | B | 1.1 | 1 | 1.09 | J B | 1.1 | 1.1 | 1.09 | B | 1.1 | 4.5 | 1.05 | B | 1 | 1.1 | 1.05 | B | 1 | 0.46 | 1.04 | J B | 1 | 0.89 | 1.05 | J B | 1 |
| 4-Bromophenyl-phenylether | 101-55-3 | 5 | ug/l | ND | 1.14 | | 1.1 | ND | 1.09 | | 1.1 | ND | 1.09 | | 1.1 | ND | 1.09 | | 1.1 | ND | 1.05 | | 1 | ND | 1.05 | | 1 | ND | 1.04 | | 1 | ND | 1.05 | | 1 |
| Butylbenzylphthalate | 85-68-7 | 2700 | ug/l | ND | 1.14 | | 1.1 | ND | 1.09 | | 1.1 | ND | 1.09 | | 1.1 | ND | 1.09 | | 1.1 | ND | 1.05 | | 1 | ND | 1.05 | | 1 | ND | 1.04 | | 1 | ND | 1.05 | | 1 |
| 4-Chloro-3-methylphenol | 59-50-7 | 510 | ug/l | ND | 1.14 | | 1.1 | ND | 1.09 | | 1.1 | ND | 1.09 | | 1.1 | ND | 1.09 | | 1.1 | ND | 1.05 | | 1 | ND | 1.05 | | 1 | ND | 1.04 | | 1 | ND | 1.05 | | 1 |
| 4-Chloroaniline | 106-47-8 | 410 | ug/l | ND | 1.14 | | 1.1 | ND | 1.09 | | 1.1 | ND | 1.09 | | 1.1 | ND | 1.09 | | 1.1 | 0.14 | 1.05 | J | 1 | ND | 1.05 | | 1 | ND | 1.04 | | 1 | ND | 1.05 | | 1 |
| Chlorobenzilate | 510-15-6 | 9600 | ug/l | ND | 1.14 | | 1.1 | ND | 1.09 | | 1.1 | ND | 1.09 | | 1.1 | ND | 1.09 | | 1.1 | ND | 1.05 | | 1 | ND | 1.05 | | 1 | ND | 1.04 | | 1 | ND | 1.05 | | 1 |
| 2-Chloronaphthalene | 91-58-7 | 8200 | ug/l | ND | 1.14 | | 0.23 | ND | 1.09 | | 0.22 | ND | 1.09 | | 0.22 | ND | 1.09 | | 0.22 | ND | 1.05 | | 0.21 | ND | 1.05 | | 0.21 | ND | 1.04 | | 0.21 | ND | 1.05 | | 0.21 |
| 2-Chlorophenol | 95-57-8 | 40 | ug/l | ND | 1.14 | | 1.1 | ND | 1.09 | | 1.1 | ND | 1.09 | | 1.1 | ND | 1.09 | | 1.1 | ND | 1.05 | | 1 | ND | 1.05 | | 1 | ND | 1.04 | | 1 | ND | 1.05 | | 1 |
| 4-Chlorophenyl-phenylether | 7005-72-3 | 5 | ug/l | ND | 1.14 | | 1.1 | ND | 1.09 | | 1.1 | ND | 1.09 | | 1.1 | ND | 1.09 | | 1.1 | ND | 1.05 | | 1 | ND | 1.05 | | 1 | ND | 1.04 | | 1 | ND | 1.05 | | 1 |
| Chrysene | 218-01-9 | 1.9 | ug/l | ND | 1.14 | | 0.23 | ND | 1.09 | | 0.22 | ND | 1.09 | | 0.22 | ND | 1.09 | | 0.22 | ND | 1.05 | | 0.21 | ND | 1.05 | | 0.21 | ND | 1.04 | | 0.21 | 0.075 | 1.05 | J | 0.21 |
| o-Cresol (2-Methylphenol) | 95-48-7 | 510000 | ug/l | ND | 1.14 | | 1.1 | 0.059 | 1.09 | J | 1.1 | 0.094 | 1.09 | J | 1.1 | ND | 1.09 | | 1.1 | 0.89 | 1.05 | J | 1 | 0.28 | 1.05 | J | 1 | ND | 1.04 | | 1 | ND | 1.05 | | 1 |
| Diallate | 2303-16-4 | 1000 | ug/l | ND | 1.14 | | 1.1 | ND | 1.09 | | 1.1 | ND | 1.09 | | 1.1 | ND | 1.09 | | 1.1 | ND | 1.05 | | 1 | ND | 1.05 | | 1 | ND | 1.04 | | 1 | ND | 1.05 | | 1 |
| Dibenz(a,h)anthracene | 53-70-3 | 0.6 | ug/l | ND | 1.14 | | 0.23 | ND | 1.09 | | 0.22 | ND | 1.09 | | 0.22 | ND | 1.09 | | 0.22 | ND | 1.05 | | 0.21 | ND | 1.05 | | 0.21 | ND | 1.04 | | 0.21 | ND | 1.05 | | 0.21 |
| Dibenzofuran | 132-64-9 | 5 | ug/l | 0.04 | 1.14 | J B | 1.1 | 0.045 | 1.09 | J B | 1.1 | 0.061 | 1.09 | J B | 1.1 | 0.043 | 1.09 | J B | 1.1 | 0.1 | 1.05 | J B | 1 | 0.051 | 1.05 | J B | 1 | 0.031 | 1.04 | J B | 1 | 0.047 | 1.05 | J B | 1 |
| 1,4- Dichlorobenzene | 106-46-7 | 7500 | ug/l | 0.38 | 1.14 | | 0.23 | 0.25 | 1.09 | | 0.22 | 0.38 | 1.09 | | 0.22 | 0.29 | 1.09 | | 0.22 | 0.22 | 1.05 | | 0.21 | ND | 1.05 | | 0.21 | ND | 1.04 | | 0.21 | 0.38 | 1.05 | | 0.21 |
| 1,2-Dichlorobenzene | 95-50-1 | 60000 | ug/l | 0.1 | 1.14 | J | 0.23 | 0.054 | 1.09 | J | 0.22 | 0.09 | 1.09 | J | 0.22 | ND | 1.09 | | 0.22 | ND | 1.05 | | 0.21 | ND | 1.05 | | 0.21 | ND | 1.04 | | 0.21 | 0.082 | 1.05 | J | 0.21 |
| 1,3-Dichlorobenzene | 541-73-1 | 60000 | ug/l | ND | 1.14 | | 0.23 | ND | 1.09 | | 0.22 | ND | 1.09 | | 0.22 | ND | 1.09 | | 0.22 | ND | 1.05 | | 0.21 | ND | 1.05 | | 0.21 | ND | 1.04 | | 0.21 | ND | 1.05 | | 0.21 |
| 3,3'-Dichlorobenzidine | 91-94-1 | 3100 | ug/l | ND | 1.14 | | 1.1 | ND | 1.09 | | 1.1 | ND | 1.09 | | 1.1 | ND | 1.09 | | 1.1 | ND | 1.05 | | 1 | ND | 1.05 | | 1 | ND | 1.04 | | 1 | ND | 1.05 | | 1 |
| 2,6-Dichlorophenol | 87-65-0 | NS | ug/l | ND | 1.14 | | 0.23 | ND | 1.09 | | 0.22 | ND | 1.09 | | 0.22 | ND | 1.09 | | 0.22 | ND | 1.05 | | 0.21 | ND | 1.05 | | 0.21 | ND | 1.04 | | 0.21 | ND | 1.05 | | 0.21 |
| 2,4-Dichlorophenol | 120-83-2 | 20000 | ug/l | ND | 1.14 | | 0.23 | ND | 1.09 | | 0.22 | ND | 1.09 | | 0.22 | ND | 1.09 | | 0.22 | ND | 1.05 | | 0.21 | ND | 1.05 | | 0.21 | ND | 1.04 | | 0.21 | ND | 1.05 | | 0.21 |
| Diethylphthalate | 84-66-2 | 1100000 | ug/l | 0.072 | 1.14 | J B | 1.1 | 0.16 | 1.09 | J B | 1.1 | 0.12 | 1.09 | J B | 1.1 | 0.14 | 1.09 | J B | 1.1 | 0.055 | 1.05 | J B | 1 | 0.076 | 1.05 | J | 1 | 0.15 | 1.04 | J | 1 | 0.37 | 1.05 | J B | 1 |
| Dimethoate | 60-51-5 | 20000 | ug/l | ND | 1.14 | | 1.1 | ND | 1.09 | | 1.1 | ND | 1.09 | | 1.1 | ND | 1.09 | | 1.1 | ND | 1.05 | | 1 | ND | 1.05 | | 1 | ND | 1.04 | | 1 | ND | 1.05 | | 1 |
| p-Dimethylaminoazobenzene | 60-11-7 | 570 | ug/l | ND | 1.14 | | 1.1 | ND | 1.09 | | 1.1 | ND | 1.09 | | 1.1 | ND | 1.09 | | 1.1 | ND | 1.05 | | 1 | ND | 1.05 | | 1 | ND | 1.04 | | 1 | ND | 1.05 | | 1 |
| 7,12-Dimethylbenz(a)anthracene | 57-97-6 | NS | ug/l | ND | 1.14 | | 1.1 | ND | 1.09 | | 1.1 | ND | 1.09 | | 1.1 | ND | 1.09 | | 1.1 | ND | 1.05 | | 1 | ND | 1.05 | | 1 | ND | 1.04 | | 1 | ND | 1.05 | | 1 |
| 3,3'-Dimethylbenzidine | 119-93-7 | 280 | ug/l | ND | 1.14 | | 11 | ND | 1.09 | | 11 | ND | 1.09 | | 11 | ND | 1.09 | | 11 | ND | 1.05 | | 10 | ND | 1.05 | | 10 | ND | 1.04 | | 10 | ND | 1.05 | | 10 |
| 2,4-Dimethylphenol | 105-67-9 | 2000000 | ug/l | ND | 1.14 | | 1.1 | ND | 1.09 | | 1.1 | ND | 1.09 | | 1.1 | ND | 1.09 | | 1.1 | 0.95 | 1.05 | J | 1 | 0.18 | 1.05 | J | 1 | ND | 1.04 | | 1 | ND | 1.05 | | 1 |
| Dimethylphthalate | 131-11-3 | 5 | ug/l | ND | 1.14 | | 1.1 | ND | 1.09 | | 1.1 | ND | 1.09 | | 1.1 | ND | 1.09 | | 1.1 | ND | 1.05 | | 1 | ND | 1.05 | | 1 | ND | 1.04 | | 1 | ND | 1.05 | | 1 |
| Di-n-butylphthalate | 84-74-2 | 400000 | ug/l | ND | 1.14 | | 1.1 | ND | 1.09 | | 1.1 | 0.14 | 1.09 | J B | 1.1 | 0.12 | 1.09 | J B | 1.1 | 0.1 | 1.05 | J B | 1 | 0.094 | 1.05 | J B | 1 | 0.12 | 1.04 | J B | 1 | 0.11 | 1.05 | J B | 1 |
| 4,6-Dinitro-2-methylphenol | 534-52-1 | 5 | ug/l | ND | 1.14 | | ***5.7*** | ND | 1.09 | | ***5.4*** | ND | 1.09 | | ***5.4*** | ND | 1.09 | | ***5.4*** | ND | 1.05 | | ***5.2*** | ND | 1.05 | | ***5.2*** | ND | 1.04 | | ***5.2*** | ND | 1.05 | | ***5.2*** |
| 1,3-Dinitrobenzene | 99-65-0 | 1000 | ug/l | ND | 1.14 | | 1.1 | ND | 1.09 | | 1.1 | ND | 1.09 | | 1.1 | ND | 1.09 | | 1.1 | ND | 1.05 | | 1 | ND | 1.05 | | 1 | ND | 1.04 | | 1 | ND | 1.05 | | 1 |
| 2,4-Dinitrophenol | 51-28-5 | 410 | ug/l | ND | 1.14 | | 5.7 | ND | 1.09 | | 5.4 | ND | 1.09 | | 5.4 | ND | 1.09 | | 5.4 | ND | 1.05 | | 5.2 | ND | 1.05 | | 5.2 | ND | 1.04 | | 5.2 | ND | 1.05 | | 5.2 |
| 2,4-Dinitrotoluene | 121-14-2 | 8400 | ug/l | ND | 1.14 | | 1.1 | ND | 1.09 | | 1.1 | ND | 1.09 | | 1.1 | ND | 1.09 | | 1.1 | ND | 1.05 | | 1 | ND | 1.05 | | 1 | 0.64 | 1.04 | J | 1 | ND | 1.05 | | 1 |
| 2,6-Dinitrotoluene | 606-20-2 | 100000 | ug/l | ND | 1.14 | | 1.1 | ND | 1.09 | | 1.1 | ND | 1.09 | | 1.1 | ND | 1.09 | | 1.1 | ND | 1.05 | | 1 | ND | 1.05 | | 1 | ND | 1.04 | | 1 | ND | 1.05 | | 1 |
| Dinoseb | 88-85-7 | 700 | ug/l | ND | 1.14 | | 1.1 | ND | 1.09 | | 1.1 | ND | 1.09 | | 1.1 | ND | 1.09 | | 1.1 | ND | 1.05 | | 1 | ND | 1.05 | | 1 | ND | 1.04 | | 1 | ND | 1.05 | | 1 |
| Disulfoton | 298-04-4 | 30 | ug/l | ND | 1.14 | | 1.1 | ND | 1.09 | | 1.1 | ND | 1.09 | | 1.1 | ND | 1.09 | | 1.1 | ND | 1.05 | | 1 | ND | 1.05 | | 1 | ND | 1.04 | | 1 | ND | 1.05 | | 1 |
| Ethyl methanesulfonate | 62-50-0 | 5 | ug/l | ND | 1.14 | | 1.1 | ND | 1.09 | | 1.1 | ND | 1.09 | | 1.1 | ND | 1.09 | | 1.1 | ND | 1.05 | | 1 | ND | 1.05 | | 1 | ND | 1.04 | | 1 | ND | 1.05 | | 1 |
| Famphur | 52-85-7 | 5 | ug/l | ND | 1.14 | | ***11*** | ND | 1.09 | | ***11*** | ND | 1.09 | | ***11*** | ND | 1.09 | | ***11*** | ND | 1.05 | | ***10*** | ND | 1.05 | | ***10*** | ND | 1.04 | | ***10*** | ND | 1.05 | | ***10*** |
| Fluoranthene | 206-44-0 | 260 | ug/l | ND | 1.14 | | 0.23 | ND | 1.09 | | 0.22 | ND | 1.09 | | 0.22 | 0.033 | 1.09 | J | 0.22 | 0.088 | 1.05 | J | 0.21 | ND | 1.05 | | 0.21 | ND | 1.04 | | 0.21 | 0.12 | 1.05 | J | 0.21 |
| Fluorene | 86-73-7 | 1900 | ug/l | 0.055 | 1.14 | J | 0.23 | 0.035 | 1.09 | J | 0.22 | 0.042 | 1.09 | J | 0.22 | 0.042 | 1.09 | J | 0.22 | 0.19 | 1.05 | J | 0.21 | 0.049 | 1.05 | J | 0.21 | ND | 1.04 | | 0.21 | 0.045 | 1.05 | J | 0.21 |
| Hexachlorobenzene | 118-74-1 | 6 | ug/l | ND | 1.14 | | 0.23 | ND | 1.09 | | 0.22 | ND | 1.09 | | 0.22 | ND | 1.09 | | 0.22 | ND | 1.05 | | 0.21 | ND | 1.05 | | 0.21 | ND | 1.04 | | 0.21 | ND | 1.05 | | 0.21 |
| Hexachlorobutadiene | 87-68-3 | 1000 | ug/l | ND | 1.14 | | 0.23 | ND | 1.09 | | 0.22 | ND | 1.09 | | 0.22 | ND | 1.09 | | 0.22 | ND | 1.05 | | 0.21 | ND | 1.05 | | 0.21 | ND | 1.04 | | 0.21 | ND | 1.05 | | 0.21 |
| Hexachlorocyclopentadiene | 77-47-4 | 1800 | ug/l | ND | 1.14 | | 1.1 | ND | 1.09 | | 1.1 | ND | 1.09 | | 1.1 | ND | 1.09 | | 1.1 | ND | 1.05 | | 1 | ND | 1.05 | | 1 | ND | 1.04 | | 1 | ND | 1.05 | | 1 |

**Table 6**
**Summary of Groundwater Analytical Results - June 2009**
**Comparison to Pennsylvania Non-Residential Non-Use Aquifer Groundwater MSCs**
**U.S. Steel - RCRA Groundwater Sampling**
**Fairless Hills, Pennsylvania**

| | CAS No | PADEP Non-Residential Non-Use Aquifer GW MSC | Location ID<br>Sample ID<br>Sample Date<br>Lab Id | MW6-05-28<br>MW6-05-28_061909<br>6/19/2009<br>C9F200181007 | | | | MW6-06-24<br>MW6-06-24_061909<br>6/19/2009<br>C9F200181008 | | | | MW6-08-28<br>MW6-08-28_061809<br>6/18/2009<br>C9F190331009 | | | | MW6-12-42<br>MW6-12-42_061809<br>6/18/2009<br>C9F190331010 | | | | MW6-20-37<br>MW6-20-37_061909<br>6/19/2009<br>C9F200181005 | | | | MW7-04-26<br>MW7-04-26_061809<br>6/18/2009<br>C9F190331008 | | | | MW7-05-28<br>MW7-05-28_061809<br>6/18/2009<br>C9F190331007 | | | |
|---|---|---|---|---|---|---|---|---|---|---|---|---|---|---|---|---|---|---|---|---|---|---|---|---|---|---|---|---|---|
| ***RCRA APPENDIX IX SEMI-VOLATILE ORGANIC COMPOUNDS (Method 8270)*** | | | | Result | DF | Q | RL | Result | DF | Q | RL | Result | DF | Q | RL | Result | DF | Q | RL | Result | DF | Q | RL | Result | DF | Q | RL | Result | DF | Q | RL |
| 2-Acetylaminofluorene (2AAF) | 53-96-3 | 680 | ug/l | ND | 1.08 | | 1.1 | ND | 1.06 | | 1.1 | ND | 1.18 | | 1.2 | ND | 1.1 | | 1.1 | ND | 1.08 | | 1.1 | ND | 1.16 | | 1.2 | ND | 1.1 | | 1.1 |
| a,a-Dimethylphenethylamine | 122-09-8 | 5 | ug/l | ND | 1.08 | | 1.1 | ND | 1.06 | | 1.1 | ND | 1.18 | | 1.2 | ND | 1.1 | | 1.1 | ND | 1.08 | | 1.1 | ND | 1.16 | | 1.2 | ND | 1.1 | | 1.1 |
| Acenaphthene | 83-32-9 | 3800 | ug/l | ND | 1.08 | | 0.22 | 0.032 | 1.06 | J B | 0.21 | 0.072 | 1.18 | J | 0.24 | 0.034 | 1.1 | J | 0.22 | ND | 1.08 | | 0.22 | 0.032 | 1.16 | J | 0.23 | ND | 1.1 | | 0.22 |
| Acenaphthylene | 208-96-8 | 16000 | ug/l | ND | 1.08 | | 0.22 | ND | 1.06 | | 0.21 | 0.041 | 1.18 | J | 0.24 | ND | 1.1 | | 0.22 | ND | 1.08 | | 0.22 | ND | 1.16 | | 0.23 | ND | 1.1 | | 0.22 |
| Acetophenone | 98-86-2 | 10000 | ug/l | ND | 1.08 | | 1.1 | ND | 1.06 | | 1.1 | ND | 1.18 | | 1.2 | 0.025 | 1.1 | J | 1.1 | ND | 1.08 | | 1.1 | ND | 1.16 | | 1.2 | ND | 1.1 | | 1.1 |
| 4-Aminobiphenyl | 92-67-1 | 120 | ug/l | ND | 1.08 | | 1.1 | ND | 1.06 | | 1.1 | ND | 1.18 | | 1.2 | ND | 1.1 | | 1.1 | ND | 1.08 | | 1.1 | ND | 1.16 | | 1.2 | ND | 1.1 | | 1.1 |
| Aniline | 62-53-3 | 5.8 | ug/l | ND | 1.08 | | 1.1 | ND | 1.06 | | 1.1 | ND | 1.18 | | 1.2 | ND | 1.1 | | 1.1 | ND | 1.08 | | 1.1 | ND | 1.16 | | 1.2 | ND | 1.1 | | 1.1 |
| Anthracene | 120-12-7 | 66 | ug/l | ND | 1.08 | | 0.22 | 0.025 | 1.06 | J | 0.21 | 0.028 | 1.18 | J | 0.24 | ND | 1.1 | | 0.22 | ND | 1.08 | | 0.22 | 0.03 | 1.16 | J | 0.23 | ND | 1.1 | | 0.22 |
| Aramite | 140-57-8 | NS | ug/l | ND | 1.08 | | 1.1 | ND | 1.06 | | 1.1 | ND | 1.18 | | 1.2 | ND | 1.1 | | 1.1 | ND | 1.08 | | 1.1 | ND | 1.16 | | 1.2 | ND | 1.1 | | 1.1 |
| Benzo(a)anthracene | 56-55-3 | 11 | ug/l | ND | 1.08 | | 0.22 | ND | 1.06 | | 0.21 | 0.069 | 1.18 | J | 0.24 | ND | 1.1 | | 0.22 | ND | 1.08 | | 0.22 | ND | 1.16 | | 0.23 | ND | 1.1 | | 0.22 |
| Benzo(a)pyrene | 50-32-8 | 3.8 | ug/l | ND | 1.08 | | 0.22 | ND | 1.06 | | 0.21 | 1 | 1.18 | | 0.24 | ND | 1.1 | | 0.22 | ND | 1.08 | | 0.22 | 1 | 1.16 | | 0.23 | ND | 1.1 | | 0.22 |
| Benzo(b)fluoranthene | 205-99-2 | 1.2 | ug/l | ND | 1.08 | | 0.22 | ND | 1.06 | | 0.21 | ND | 1.18 | | 0.24 | ND | 1.1 | | 0.22 | ND | 1.08 | | 0.22 | ND | 1.16 | | 0.23 | ND | 1.1 | | 0.22 |
| Benzo(ghi)perylene | 191-24-2 | 0.26 | ug/l | ND | 1.08 | | 0.22 | ND | 1.06 | | 0.21 | **0.88** | 1.18 | | 0.24 | ND | 1.1 | | 0.22 | ND | 1.08 | | 0.22 | **0.84** | 1.16 | | 0.23 | ND | 1.1 | | 0.22 |
| Benzo(k)fluoranthene | 207-08-9 | 0.55 | ug/l | ND | 1.08 | | 0.22 | ND | 1.06 | | 0.21 | 0.11 | 1.18 | J | 0.24 | ND | 1.1 | | 0.22 | ND | 1.08 | | 0.22 | 0.073 | 1.16 | J | 0.23 | ND | 1.1 | | 0.22 |
| Benzyl alcohol | 100-51-6 | 31000 | ug/l | ND | 1.08 | | 1.1 | ND | 1.06 | | 1.1 | 0.12 | 1.18 | J | 1.2 | 0.12 | 1.1 | J | 1.1 | ND | 1.08 | | 1.1 | 0.13 | 1.16 | J | 1.2 | 0.13 | 1.1 | J | 1.1 |
| Bis(2-Chloroethoxy)methane | 111-91-1 | 5 | ug/l | ND | 1.08 | | 1.1 | ND | 1.06 | | 1.1 | ND | 1.18 | | 1.2 | ND | 1.1 | | 1.1 | ND | 1.08 | | 1.1 | ND | 1.16 | | 1.2 | ND | 1.1 | | 1.1 |
| Bis(2-Chloroethyl)ether | 111-44-4 | 55 | ug/l | ND | 1.08 | | 0.22 | ND | 1.06 | | 0.21 | ND | 1.18 | | 0.24 | ND | 1.1 | | 0.22 | ND | 1.08 | | 0.22 | ND | 1.16 | | 0.23 | ND | 1.1 | | 0.22 |
| Bis(2-Chloroisopropyl)ether | 108-60-1 | 30000 | ug/l | ND | 1.08 | | 0.22 | ND | 1.06 | | 0.21 | ND | 1.18 | | 0.24 | ND | 1.1 | | 0.22 | ND | 1.08 | | 0.22 | ND | 1.16 | | 0.23 | ND | 1.1 | | 0.22 |
| Bis(2-Ethylhexyl)phthalate | 117-81-7 | 290 | ug/l | 0.65 | 1.08 | J B | 1.1 | 1.5 | 1.06 | B | 1.1 | 2.3 | 1.18 | B | 1.2 | 11 | 1.1 | B | 1.1 | 0.9 | 1.08 | J B | 1.1 | 8 | 1.16 | B | 1.2 | 3.6 | 1.1 | B | 1.1 |
| 4-Bromophenyl-phenylether | 101-55-3 | 5 | ug/l | ND | 1.08 | | 1.1 | ND | 1.06 | | 1.1 | ND | 1.18 | | 1.2 | ND | 1.1 | | 1.1 | ND | 1.08 | | 1.1 | ND | 1.16 | | 1.2 | ND | 1.1 | | 1.1 |
| Butylbenzylphthalate | 85-68-7 | 2700 | ug/l | ND | 1.08 | | 1.1 | ND | 1.06 | | 1.1 | ND | 1.18 | | 1.2 | 0.76 | 1.1 | J | 1.1 | ND | 1.08 | | 1.1 | ND | 1.16 | | 1.2 | ND | 1.1 | | 1.1 |
| 4-Chloro-3-methylphenol | 59-50-7 | 510 | ug/l | ND | 1.08 | | 1.1 | ND | 1.06 | | 1.1 | ND | 1.18 | | 1.2 | ND | 1.1 | | 1.1 | ND | 1.08 | | 1.1 | ND | 1.16 | | 1.2 | ND | 1.1 | | 1.1 |
| 4-Chloroaniline | 106-47-8 | 410 | ug/l | ND | 1.08 | | 1.1 | ND | 1.06 | | 1.1 | ND | 1.18 | | 1.2 | ND | 1.1 | | 1.1 | ND | 1.08 | | 1.1 | ND | 1.16 | | 1.2 | ND | 1.1 | | 1.1 |
| Chlorobenzilate | 510-15-6 | 9600 | ug/l | ND | 1.08 | | 1.1 | ND | 1.06 | | 1.1 | ND | 1.18 | | 1.2 | ND | 1.1 | | 1.1 | ND | 1.08 | | 1.1 | ND | 1.16 | | 1.2 | ND | 1.1 | | 1.1 |
| 2-Chloronaphthalene | 91-58-7 | 8200 | ug/l | ND | 1.08 | | 0.22 | ND | 1.06 | | 0.21 | ND | 1.18 | | 0.24 | ND | 1.1 | | 0.22 | ND | 1.08 | | 0.22 | ND | 1.16 | | 0.23 | ND | 1.1 | | 0.22 |
| 2-Chlorophenol | 95-57-8 | 40 | ug/l | ND | 1.08 | | 1.1 | ND | 1.06 | | 1.1 | ND | 1.18 | | 1.2 | ND | 1.1 | | 1.1 | ND | 1.08 | | 1.1 | ND | 1.16 | | 1.2 | ND | 1.1 | | 1.1 |
| 4-Chlorophenyl-phenylether | 7005-72-3 | 5 | ug/l | ND | 1.08 | | 1.1 | ND | 1.06 | | 1.1 | ND | 1.18 | | 1.2 | ND | 1.1 | | 1.1 | ND | 1.08 | | 1.1 | ND | 1.16 | | 1.2 | ND | 1.1 | | 1.1 |
| Chrysene | 218-01-9 | 1.9 | ug/l | ND | 1.08 | | 0.22 | ND | 1.06 | | 0.21 | 0.096 | 1.18 | J | 0.24 | ND | 1.1 | | 0.22 | ND | 1.08 | | 0.22 | ND | 1.16 | | 0.23 | ND | 1.1 | | 0.22 |
| o-Cresol (2-Methylphenol) | 95-48-7 | 510000 | ug/l | ND | 1.08 | | 1.1 | ND | 1.06 | | 1.1 | ND | 1.18 | | 1.2 | ND | 1.1 | | 1.1 | ND | 1.08 | | 1.1 | ND | 1.16 | | 1.2 | ND | 1.1 | | 1.1 |
| Diallate | 2303-16-4 | 1000 | ug/l | ND | 1.08 | | 1.1 | ND | 1.06 | | 1.1 | ND | 1.18 | | 1.2 | ND | 1.1 | | 1.1 | ND | 1.08 | | 1.1 | ND | 1.16 | | 1.2 | ND | 1.1 | | 1.1 |
| Dibenz(a,h)anthracene | 53-70-3 | 0.6 | ug/l | ND | 1.08 | | 0.22 | ND | 1.06 | | 0.21 | **1.5** | 1.18 | | 0.24 | ND | 1.1 | | 0.22 | ND | 1.08 | | 0.22 | **1.4** | 1.16 | | 0.23 | ND | 1.1 | | 0.22 |
| Dibenzofuran | 132-64-9 | 5 | ug/l | 0.02 | 1.08 | J B | 1.1 | 0.036 | 1.06 | J B | 1.1 | 0.058 | 1.18 | J B | 1.2 | 0.029 | 1.1 | J B | 1.1 | 0.04 | 1.08 | J B | 1.1 | 0.032 | 1.16 | J B | 1.2 | 0.023 | 1.1 | J B | 1.1 |
| 1,4- Dichlorobenzene | 106-46-7 | 7500 | ug/l | 0.25 | 1.08 | | 0.22 | 0.34 | 1.06 | | 0.21 | 0.29 | 1.18 | | 0.24 | 0.21 | 1.1 | J | 0.22 | 0.43 | 1.08 | | 0.22 | 0.3 | 1.16 | | 0.23 | 0.24 | 1.1 | | 0.22 |
| 1,2-Dichlorobenzene | 95-50-1 | 60000 | ug/l | ND | 1.08 | | 0.22 | 0.18 | 1.06 | J | 0.21 | ND | 1.18 | | 0.24 | ND | 1.1 | | 0.22 | 0.14 | 1.08 | J | 0.22 | ND | 1.16 | | 0.23 | ND | 1.1 | | 0.22 |
| 1,3-Dichlorobenzene | 541-73-1 | 60000 | ug/l | ND | 1.08 | | 0.22 | ND | 1.06 | | 0.21 | ND | 1.18 | | 0.24 | ND | 1.1 | | 0.22 | 0.07 | 1.08 | J | 0.22 | ND | 1.16 | | 0.23 | ND | 1.1 | | 0.22 |
| 3,3'-Dichlorobenzidine | 91-94-1 | 3100 | ug/l | ND | 1.08 | | 1.1 | ND | 1.06 | | 1.1 | ND | 1.18 | | 1.2 | ND | 1.1 | | 1.1 | ND | 1.08 | | 1.1 | ND | 1.16 | | 1.2 | ND | 1.1 | | 1.1 |
| 2,6-Dichlorophenol | 87-65-0 | NS | ug/l | ND | 1.08 | | 0.22 | ND | 1.06 | | 0.21 | ND | 1.18 | | 0.24 | ND | 1.1 | | 0.22 | ND | 1.08 | | 0.22 | ND | 1.16 | | 0.23 | ND | 1.1 | | 0.22 |
| 2,4-Dichlorophenol | 120-83-2 | 20000 | ug/l | ND | 1.08 | | 0.22 | ND | 1.06 | | 0.21 | ND | 1.18 | | 0.24 | ND | 1.1 | | 0.22 | ND | 1.08 | | 0.22 | ND | 1.16 | | 0.23 | ND | 1.1 | | 0.22 |
| Diethylphthalate | 84-66-2 | 1100000 | ug/l | ND | 1.08 | | 1.1 | 0.084 | 1.06 | J B | 1.1 | 0.16 | 1.18 | J B | 1.2 | 0.23 | 1.1 | J B | 1.1 | 0.086 | 1.08 | J B | 1.1 | 0.12 | 1.16 | J B | 1.2 | 0.13 | 1.1 | J B | 1.1 |
| Dimethoate | 60-51-5 | 20000 | ug/l | ND | 1.08 | | 1.1 | ND | 1.06 | | 1.1 | ND | 1.18 | | 1.2 | ND | 1.1 | | 1.1 | ND | 1.08 | | 1.1 | ND | 1.16 | | 1.2 | ND | 1.1 | | 1.1 |
| p-Dimethylaminoazobenzene | 60-11-7 | 570 | ug/l | ND | 1.08 | | 1.1 | ND | 1.06 | | 1.1 | ND | 1.18 | | 1.2 | ND | 1.1 | | 1.1 | ND | 1.08 | | 1.1 | ND | 1.16 | | 1.2 | ND | 1.1 | | 1.1 |
| 7,12-Dimethylbenz(a)anthracene | 57-97-6 | NS | ug/l | ND | 1.08 | | 1.1 | ND | 1.06 | | 1.1 | ND | 1.18 | | 1.2 | ND | 1.1 | | 1.1 | ND | 1.08 | | 1.1 | ND | 1.16 | | 1.2 | ND | 1.1 | | 1.1 |
| 3,3'-Dimethylbenzidine | 119-93-7 | 280 | ug/l | ND | 1.08 | | 11 | ND | 1.06 | | 11 | ND | 1.18 | | 12 | ND | 1.1 | | 11 | ND | 1.08 | | 11 | ND | 1.16 | | 12 | ND | 1.1 | | 11 |
| 2,4-Dimethylphenol | 105-67-9 | 2000000 | ug/l | ND | 1.08 | | 1.1 | ND | 1.06 | | 1.1 | ND | 1.18 | | 1.2 | ND | 1.1 | | 1.1 | ND | 1.08 | | 1.1 | ND | 1.16 | | 1.2 | ND | 1.1 | | 1.1 |
| Dimethylphthalate | 131-11-3 | 5 | ug/l | ND | 1.08 | | 1.1 | ND | 1.06 | | 1.1 | ND | 1.18 | | 1.2 | ND | 1.1 | | 1.1 | ND | 1.08 | | 1.1 | ND | 1.16 | | 1.2 | ND | 1.1 | | 1.1 |
| Di-n-butylphthalate | 84-74-2 | 400000 | ug/l | 0.062 | 1.08 | J B | 1.1 | 0.14 | 1.06 | J B | 1.1 | 0.2 | 1.18 | J B | 1.2 | 0.29 | 1.1 | J B | 1.1 | 0.096 | 1.08 | J B | 1.1 | 0.19 | 1.16 | J B | 1.2 | 0.13 | 1.1 | J B | 1.1 |
| 4,6-Dinitro-2-methylphenol | 534-52-1 | 5 | ug/l | ND | 1.08 | | ***5.4*** | ND | 1.06 | | ***5.3*** | ND | 1.18 | | ***5.9*** | ND | 1.1 | | ***5.5*** | ND | 1.08 | | ***5.4*** | ND | 1.16 | | ***5.8*** | ND | 1.1 | | ***5.5*** |
| 1,3-Dinitrobenzene | 99-65-0 | 1000 | ug/l | ND | 1.08 | | 1.1 | ND | 1.06 | | 1.1 | ND | 1.18 | | 1.2 | ND | 1.1 | | 1.1 | ND | 1.08 | | 1.1 | ND | 1.16 | | 1.2 | ND | 1.1 | | 1.1 |
| 2,4-Dinitrophenol | 51-28-5 | 410 | ug/l | ND | 1.08 | | 5.4 | ND | 1.06 | | 5.3 | ND | 1.18 | | 5.9 | ND | 1.1 | | 5.5 | ND | 1.08 | | 5.4 | ND | 1.16 | | 5.8 | ND | 1.1 | | 5.5 |
| 2,4-Dinitrotoluene | 121-14-2 | 8400 | ug/l | ND | 1.08 | | 1.1 | ND | 1.06 | | 1.1 | ND | 1.18 | | 1.2 | ND | 1.1 | | 1.1 | ND | 1.08 | | 1.1 | ND | 1.16 | | 1.2 | ND | 1.1 | | 1.1 |
| 2,6-Dinitrotoluene | 606-20-2 | 100000 | ug/l | ND | 1.08 | | 1.1 | ND | 1.06 | | 1.1 | ND | 1.18 | | 1.2 | ND | 1.1 | | 1.1 | ND | 1.08 | | 1.1 | ND | 1.16 | | 1.2 | ND | 1.1 | | 1.1 |
| Dinoseb | 88-85-7 | 700 | ug/l | ND | 1.08 | | 1.1 | ND | 1.06 | | 1.1 | ND | 1.18 | | 1.2 | ND | 1.1 | | 1.1 | ND | 1.08 | | 1.1 | ND | 1.16 | | 1.2 | ND | 1.1 | | 1.1 |
| Disulfoton | 298-04-4 | 30 | ug/l | ND | 1.08 | | 1.1 | ND | 1.06 | | 1.1 | ND | 1.18 | | 1.2 | ND | 1.1 | | 1.1 | ND | 1.08 | | 1.1 | ND | 1.16 | | 1.2 | ND | 1.1 | | 1.1 |
| Ethyl methanesulfonate | 62-50-0 | 5 | ug/l | ND | 1.08 | | 1.1 | ND | 1.06 | | 1.1 | ND | 1.18 | | 1.2 | ND | 1.1 | | 1.1 | ND | 1.08 | | 1.1 | ND | 1.16 | | 1.2 | ND | 1.1 | | 1.1 |
| Famphur | 52-85-7 | 5 | ug/l | ND | 1.08 | | ***11*** | ND | 1.06 | | ***11*** | ND | 1.18 | | ***12*** | ND | 1.1 | | ***11*** | ND | 1.08 | | ***11*** | ND | 1.16 | | ***12*** | ND | 1.1 | | ***11*** |
| Fluoranthene | 206-44-0 | 260 | ug/l | ND | 1.08 | | 0.22 | 0.047 | 1.06 | J | 0.21 | 0.071 | 1.18 | J | 0.24 | 0.035 | 1.1 | J | 0.22 | ND | 1.08 | | 0.22 | 0.031 | 1.16 | J | 0.23 | 0.016 | 1.1 | J | 0.22 |
| Fluorene | 86-73-7 | 1900 | ug/l | 0.018 | 1.08 | J | 0.22 | 0.03 | 1.06 | J | 0.21 | 0.057 | 1.18 | J | 0.24 | 0.025 | 1.1 | J | 0.22 | 0.037 | 1.08 | J | 0.22 | 0.03 | 1.16 | J | 0.23 | 0.023 | 1.1 | J | 0.22 |
| Hexachlorobenzene | 118-74-1 | 6 | ug/l | ND | 1.08 | | 0.22 | ND | 1.06 | | 0.21 | ND | 1.18 | | 0.24 | ND | 1.1 | | 0.22 | ND | 1.08 | | 0.22 | ND | 1.16 | | 0.23 | ND | 1.1 | | 0.22 |
| Hexachlorobutadiene | 87-68-3 | 1000 | ug/l | ND | 1.08 | | 0.22 | ND | 1.06 | | 0.21 | ND | 1.18 | | 0.24 | ND | 1.1 | | 0.22 | ND | 1.08 | | 0.22 | ND | 1.16 | | 0.23 | ND | 1.1 | | 0.22 |
| Hexachlorocyclopentadiene | 77-47-4 | 1800 | ug/l | ND | 1.08 | | 1.1 | ND | 1.06 | | 1.1 | ND | 1.18 | | 1.2 | ND | 1.1 | | 1.1 | ND | 1.08 | | 1.1 | ND | 1.16 | | 1.2 | ND | 1.1 | | 1.1 |

**Table 6**
**Summary of Groundwater Analytical Results - June 2009**
**Comparison to Pennsylvania Non-Residential Non-Use Aquifer Groundwater MSCs**
**U.S. Steel - RCRA Groundwater Sampling**
**Fairless Hills, Pennsylvania**

| | CAS No | PADEP Non-Residential Non-Use Aquifer GW MSC | Location ID<br>Sample ID<br>Sample Date<br>Lab Id | FB-01<br>FB-01_061709<br>6/17/2009<br>C9F180195005 | | | | FB-02<br>FB-02_061809<br>6/18/2009<br>C9F190331011 | | | | FB-03<br>FB-03_061909<br>6/19/2009<br>C9F200181014 | | | | TB-01<br>TB-01_061709<br>C9F180195006<br>39981 | | | | TB-02<br>TB-02_061809<br>C9F190331015<br>39982 | | | | TB-03<br>TB-03_061909<br>C9F200181015<br>39983 | | | |
|---|---|---|---|---|---|---|---|---|---|---|---|---|---|---|---|---|---|---|---|---|---|---|---|---|---|---|---|
| ***RCRA APPENDIX IX SEMI-VOLATILE ORGANIC COMPOUNDS (Method 8270)*** | | | | Result | DF | Q | RL | Result | DF | Q | RL | Result | DF | Q | RL | Result | DF | Q | RL | Result | DF | Q | RL | Result | DF | Q | RL |
| 2-Acetylaminofluorene (2AAF) | 53-96-3 | 680 | ug/l | ND | 1.1 | | 1.2 | ND | 1.04 | | 1 | ND | 1.05 | | 1 | - | - | - | - | - | - | - | - | - | - | - | - |
| a,a-Dimethylphenethylamine | 122-09-8 | 5 | ug/l | ND | 1.1 | | 0.23 | ND | 1.04 | | 1 | ND | 1.05 | | 1 | - | - | - | - | - | - | - | - | - | - | - | - |
| Acenaphthene | 83-32-9 | 3800 | ug/l | 0.025 | 1.1 | J | 0.23 | 0.057 | 1.04 | J | 0.21 | 0.032 | 1.05 | J B | 0.21 | - | - | - | - | - | - | - | - | - | - | - | - |
| Acenaphthylene | 208-96-8 | 16000 | ug/l | ND | 1.1 | | 1.2 | 0.034 | 1.04 | J | 0.21 | ND | 1.05 | | 0.21 | - | - | - | - | - | - | - | - | - | - | - | - |
| Acetophenone | 98-86-2 | 10000 | ug/l | 0.071 | 1.1 | J | 0.23 | 0.054 | 1.04 | J | 1 | 0.065 | 1.05 | J | 1 | - | - | - | - | - | - | - | - | - | - | - | - |
| 4-Aminobiphenyl | 92-67-1 | 120 | ug/l | ND | 1.1 | | 1.2 | ND | 1.04 | | 1 | ND | 1.05 | | 1 | - | - | - | - | - | - | - | - | - | - | - | - |
| Aniline | 62-53-3 | 5.8 | ug/l | ND | 1.1 | | 1.2 | ND | 1.04 | | 1 | ND | 1.05 | | 1 | - | - | - | - | - | - | - | - | - | - | - | - |
| Anthracene | 120-12-7 | 66 | ug/l | ND | 1.1 | | 1.2 | ND | 1.04 | | 0.21 | ND | 1.05 | | 0.21 | - | - | - | - | - | - | - | - | - | - | - | - |
| Aramite | 140-57-8 | NS | ug/l | ND | 1.1 | | 1.2 | ND | 1.04 | | 1 | ND | 1.05 | | 1 | - | - | - | - | - | - | - | - | - | - | - | - |
| Benzo(a)anthracene | 56-55-3 | 11 | ug/l | ND | 1.1 | | 0.23 | ND | 1.04 | | 0.21 | ND | 1.05 | | 0.21 | - | - | - | - | - | - | - | - | - | - | - | - |
| Benzo(a)pyrene | 50-32-8 | 3.8 | ug/l | ND | 1.1 | | 1.2 | ND | 1.04 | | 0.21 | ND | 1.05 | | 0.21 | - | - | - | - | - | - | - | - | - | - | - | - |
| Benzo(b)fluoranthene | 205-99-2 | 1.2 | ug/l | ND | 1.1 | | ***5.8*** | ND | 1.04 | | 0.21 | ND | 1.05 | | 0.21 | - | - | - | - | - | - | - | - | - | - | - | - |
| Benzo(ghi)perylene | 191-24-2 | 0.26 | ug/l | ND | 1.1 | | ***1.2*** | ND | 1.04 | | 0.21 | ND | 1.05 | | 0.21 | - | - | - | - | - | - | - | - | - | - | - | - |
| Benzo(k)fluoranthene | 207-08-9 | 0.55 | ug/l | ND | 1.1 | | 0.23 | ND | 1.04 | | 0.21 | ND | 1.05 | | 0.21 | - | - | - | - | - | - | - | - | - | - | - | - |
| Benzyl alcohol | 100-51-6 | 31000 | ug/l | ND | 1.1 | | 1.2 | 0.15 | 1.04 | J | 1 | ND | 1.05 | | 1 | - | - | - | - | - | - | - | - | - | - | - | - |
| Bis(2-Chloroethoxy)methane | 111-91-1 | 5 | ug/l | ND | 1.1 | | 1.2 | ND | 1.04 | | 1 | ND | 1.05 | | 1 | - | - | - | - | - | - | - | - | - | - | - | - |
| Bis(2-Chloroethyl)ether | 111-44-4 | 55 | ug/l | ND | 1.1 | | 0.23 | ND | 1.04 | | 0.21 | ND | 1.05 | | 0.21 | - | - | - | - | - | - | - | - | - | - | - | - |
| Bis(2-Chloroisopropyl)ether | 108-60-1 | 30000 | ug/l | ND | 1.1 | | 1.2 | ND | 1.04 | | 0.21 | ND | 1.05 | | 0.21 | - | - | - | - | - | - | - | - | - | - | - | - |
| Bis(2-Ethylhexyl)phthalate | 117-81-7 | 290 | ug/l | 0.78 | 1.1 | J B | 1.2 | 15 | 1.04 | B | 1 | 0.94 | 1.05 | J B | 1 | - | - | - | - | - | - | - | - | - | - | - | - |
| 4-Bromophenyl-phenylether | 101-55-3 | 5 | ug/l | ND | 1.1 | | 0.23 | ND | 1.04 | | 1 | ND | 1.05 | | 1 | - | - | - | - | - | - | - | - | - | - | - | - |
| Butylbenzylphthalate | 85-68-7 | 2700 | ug/l | ND | 1.1 | | 1.2 | 0.66 | 1.04 | J | 1 | ND | 1.05 | | 1 | - | - | - | - | - | - | - | - | - | - | - | - |
| 4-Chloro-3-methylphenol | 59-50-7 | 510 | ug/l | ND | 1.1 | | 1.2 | ND | 1.04 | | 1 | ND | 1.05 | | 1 | - | - | - | - | - | - | - | - | - | - | - | - |
| 4-Chloroaniline | 106-47-8 | 410 | ug/l | ND | 1.1 | | 5.8 | ND | 1.04 | | 1 | ND | 1.05 | | 1 | - | - | - | - | - | - | - | - | - | - | - | - |
| Chlorobenzilate | 510-15-6 | 9600 | ug/l | ND | 1.1 | | 1.2 | ND | 1.04 | | 1 | ND | 1.05 | | 1 | - | - | - | - | - | - | - | - | - | - | - | - |
| 2-Chloronaphthalene | 91-58-7 | 8200 | ug/l | ND | 1.1 | | 1.2 | 0.038 | 1.04 | J | 0.21 | ND | 1.05 | | 0.21 | - | - | - | - | - | - | - | - | - | - | - | - |
| 2-Chlorophenol | 95-57-8 | 40 | ug/l | ND | 1.1 | | 12 | ND | 1.04 | | 1 | ND | 1.05 | | 1 | - | - | - | - | - | - | - | - | - | - | - | - |
| 4-Chlorophenyl-phenylether | 7005-72-3 | 5 | ug/l | ND | 1.1 | | 1.2 | ND | 1.04 | | 1 | ND | 1.05 | | 1 | - | - | - | - | - | - | - | - | - | - | - | - |
| Chrysene | 218-01-9 | 1.9 | ug/l | ND | 1.1 | | 1.2 | ND | 1.04 | | 0.21 | ND | 1.05 | | 0.21 | - | - | - | - | - | - | - | - | - | - | - | - |
| o-Cresol (2-Methylphenol) | 95-48-7 | 510000 | ug/l | ND | 1.1 | | 1.2 | ND | 1.04 | | 1 | ND | 1.05 | | 1 | - | - | - | - | - | - | - | - | - | - | - | - |
| Diallate | 2303-16-4 | 1000 | ug/l | ND | 1.1 | | 5.8 | ND | 1.04 | | 1 | ND | 1.05 | | 1 | - | - | - | - | - | - | - | - | - | - | - | - |
| Dibenz(a,h)anthracene | 53-70-3 | 0.6 | ug/l | ND | 1.1 | | ***5.8*** | ND | 1.04 | | 0.21 | ND | 1.05 | | 0.21 | - | - | - | - | - | - | - | - | - | - | - | - |
| Dibenzofuran | 132-64-9 | 5 | ug/l | 0.038 | 1.1 | J B | 1.2 | 0.056 | 1.04 | J B | 1 | 0.05 | 1.05 | J B | 1 | - | - | - | - | - | - | - | - | - | - | - | - |
| 1,4- Dichlorobenzene | 106-46-7 | 7500 | ug/l | 0.15 | 1.1 | J | 1.2 | 0.2 | 1.04 | J | 0.21 | 0.33 | 1.05 | | 0.21 | - | - | - | - | - | - | - | - | - | - | - | - |
| 1,2-Dichlorobenzene | 95-50-1 | 60000 | ug/l | 0.072 | 1.1 | J | 1.2 | 0.067 | 1.04 | J | 0.21 | 0.082 | 1.05 | J | 0.21 | - | - | - | - | - | - | - | - | - | - | - | - |
| 1,3-Dichlorobenzene | 541-73-1 | 60000 | ug/l | ND | 1.1 | | 1.2 | ND | 1.04 | | 0.21 | ND | 1.05 | | 0.21 | - | - | - | - | - | - | - | - | - | - | - | - |
| 3,3'-Dichlorobenzidine | 91-94-1 | 3100 | ug/l | ND | 1.1 | | 1.2 | ND | 1.04 | | 1 | ND | 1.05 | | 1 | - | - | - | - | - | - | - | - | - | - | - | - |
| 2,6-Dichlorophenol | 87-65-0 | NS | ug/l | ND | 1.1 | | 5.8 | ND | 1.04 | | 0.21 | ND | 1.05 | | 0.21 | - | - | - | - | - | - | - | - | - | - | - | - |
| 2,4-Dichlorophenol | 120-83-2 | 20000 | ug/l | ND | 1.1 | | 12 | ND | 1.04 | | 0.21 | ND | 1.05 | | 0.21 | - | - | - | - | - | - | - | - | - | - | - | - |
| Diethylphthalate | 84-66-2 | 1100000 | ug/l | 0.11 | 1.1 | J | 12 | 0.16 | 1.04 | J B | 1 | 0.1 | 1.05 | J B | 1 | - | - | - | - | - | - | - | - | - | - | - | - |
| Dimethoate | 60-51-5 | 20000 | ug/l | ND | 1.1 | | 1.2 | ND | 1.04 | | 1 | ND | 1.05 | | 1 | - | - | - | - | - | - | - | - | - | - | - | - |
| p-Dimethylaminoazobenzene | 60-11-7 | 570 | ug/l | ND | 1.1 | | 1.2 | ND | 1.04 | | 1 | ND | 1.05 | | 1 | - | - | - | - | - | - | - | - | - | - | - | - |
| 7,12-Dimethylbenz(a)anthracene | 57-97-6 | NS | ug/l | ND | 1.1 | | 0.23 | ND | 1.04 | | 1 | ND | 1.05 | | 1 | - | - | - | - | - | - | - | - | - | - | - | - |
| 3,3'-Dimethylbenzidine | 119-93-7 | 280 | ug/l | ND | 1.1 | | 0.23 | ND | 1.04 | | 10 | ND | 1.05 | | 10 | - | - | - | - | - | - | - | - | - | - | - | - |
| 2,4-Dimethylphenol | 105-67-9 | 2000000 | ug/l | ND | 1.1 | | 1.2 | ND | 1.04 | | 1 | ND | 1.05 | | 1 | - | - | - | - | - | - | - | - | - | - | - | - |
| Dimethylphthalate | 131-11-3 | 5 | ug/l | 0.21 | 1.1 | J | 1.2 | ND | 1.04 | | 1 | ND | 1.05 | | 1 | - | - | - | - | - | - | - | - | - | - | - | - |
| Di-n-butylphthalate | 84-74-2 | 400000 | ug/l | 0.12 | 1.1 | J B | 0.23 | 0.17 | 1.04 | J B | 1 | 0.1 | 1.05 | J B | 1 | - | - | - | - | - | - | - | - | - | - | - | - |
| 4,6-Dinitro-2-methylphenol | 534-52-1 | 5 | ug/l | ND | 1.1 | | 1.2 | ND | 1.04 | | ***5.2*** | ND | 1.05 | | ***5.2*** | - | - | - | - | - | - | - | - | - | - | - | - |
| 1,3-Dinitrobenzene | 99-65-0 | 1000 | ug/l | ND | 1.1 | | 0.23 | ND | 1.04 | | 1 | ND | 1.05 | | 1 | - | - | - | - | - | - | - | - | - | - | - | - |
| 2,4-Dinitrophenol | 51-28-5 | 410 | ug/l | ND | 1.1 | | 0.23 | ND | 1.04 | | 5.2 | ND | 1.05 | | 5.2 | - | - | - | - | - | - | - | - | - | - | - | - |
| 2,4-Dinitrotoluene | 121-14-2 | 8400 | ug/l | ND | 1.1 | | 0.23 | ND | 1.04 | | 1 | ND | 1.05 | | 1 | - | - | - | - | - | - | - | - | - | - | - | - |
| 2,6-Dinitrotoluene | 606-20-2 | 100000 | ug/l | ND | 1.1 | | 0.23 | ND | 1.04 | | 1 | ND | 1.05 | | 1 | - | - | - | - | - | - | - | - | - | - | - | - |
| Dinoseb | 88-85-7 | 700 | ug/l | ND | 1.1 | | 0.23 | ND | 1.04 | | 1 | ND | 1.05 | | 1 | - | - | - | - | - | - | - | - | - | - | - | - |
| Disulfoton | 298-04-4 | 30 | ug/l | ND | 1.1 | | 1.2 | ND | 1.04 | | 1 | ND | 1.05 | | 1 | - | - | - | - | - | - | - | - | - | - | - | - |
| Ethyl methanesulfonate | 62-50-0 | 5 | ug/l | ND | 1.1 | | 1.2 | ND | 1.04 | | 1 | ND | 1.05 | | 1 | - | - | - | - | - | - | - | - | - | - | - | - |
| Famphur | 52-85-7 | 5 | ug/l | ND | 1.1 | | 0.23 | ND | 1.04 | | ***10*** | ND | 1.05 | | ***10*** | - | - | - | - | - | - | - | - | - | - | - | - |
| Fluoranthene | 206-44-0 | 260 | ug/l | ND | 1.1 | | 1.2 | ND | 1.04 | | 0.21 | ND | 1.05 | | 0.21 | - | - | - | - | - | - | - | - | - | - | - | - |
| Fluorene | 86-73-7 | 1900 | ug/l | ND | 1.1 | | 0.23 | ND | 1.04 | | 0.21 | 0.043 | 1.05 | J | 0.21 | - | - | - | - | - | - | - | - | - | - | - | - |
| Hexachlorobenzene | 118-74-1 | 6 | ug/l | ND | 1.1 | | 1.2 | ND | 1.04 | | 0.21 | ND | 1.05 | | 0.21 | - | - | - | - | - | - | - | - | - | - | - | - |
| Hexachlorobutadiene | 87-68-3 | 1000 | ug/l | ND | 1.1 | | 4.6 | ND | 1.04 | | 0.21 | ND | 1.05 | | 0.21 | - | - | - | - | - | - | - | - | - | - | - | - |
| Hexachlorocyclopentadiene | 77-47-4 | 1800 | ug/l | ND | 1.1 | | 1.2 | ND | 1.04 | | 1 | ND | 1.05 | | 1 | - | - | - | - | - | - | - | - | - | - | - | - |

**Table 6**
**Summary of Groundwater Analytical Results - June 2009**
**Comparison to Pennsylvania Non-Residential Non-Use Aquifer Groundwater MSCs**
**U.S. Steel - RCRA Groundwater Sampling**
**Fairless Hills, Pennsylvania**

| | CAS No | PADEP Non-Residential Non-Use Aquifer GW MSC | Location ID<br>Sample ID<br>Sample Date<br>Lab Id | MW1-02-31<br>MW1-02-31_061809<br>6/18/2009<br>C9F190331006 | | | | MW1-12-29<br>MW1-12-29_061809<br>6/18/2009<br>C9F190331004 | | | | MW1-15-29<br>MW1-15-29_061909<br>6/19/2009<br>C9F200181009 | | | | MW1-23-47<br>MW1-23-47_061909<br>6/19/2009<br>C9F200181001 | | | | MW1-26-27<br>MW1-26-27_061709<br>6/17/2009<br>C9F180195003 | | | | MW1-28-74<br>MW1-28-74_061809<br>6/18/2009<br>C9F190331012 | | | | MW2-01-22<br>MW2-01-22_061809<br>6/18/2009<br>C9F190331013 | | | |
|---|---|---|---|---|---|---|---|---|---|---|---|---|---|---|---|---|---|---|---|---|---|---|---|---|---|---|---|---|---|
| ***RCRA APPENDIX IX SEMI-VOLATILE ORGANIC COMPOUNDS (Method 8270)*** | | | | Result | DF | Q | RL | Result | DF | Q | RL | Result | DF | Q | RL | Result | DF | Q | RL | Result | DF | Q | RL | Result | DF | Q | RL | Result | DF | Q | RL |
| Hexachloroethane | 67-72-1 | 100 | ug/l | ND | 1.04 | | 1 | ND | 1.06 | | 1.1 | ND | 1.1 | | 1.1 | ND | 1.05 | | 1 | ND | 1.1 | | 1.1 | ND | 1.11 | | 1.1 | ND | 1.09 | | 1.1 |
| Hexachloropropene | 1888-71-7 | 5 | ug/l | ND | 1.04 | | 1 | ND | 1.06 | | 1.1 | ND | 1.1 | | 1.1 | ND | 1.05 | | 1 | ND | 1.1 | | 1.1 | ND | 1.11 | | 1.1 | ND | 1.09 | | 1.1 |
| Indeno(1,2,3-cd)pyrene | 193-39-5 | 62 | ug/l | ND | 1.04 | | 0.21 | ND | 1.06 | | 0.21 | ND | 1.1 | | 0.22 | ND | 1.05 | | 0.21 | ND | 1.1 | | 0.22 | ND | 1.11 | | 0.22 | ND | 1.09 | | 0.22 |
| Isodrin | 465-73-6 | 5 | ug/l | ND | 1.04 | | 1 | ND | 1.06 | | 1.1 | ND | 1.1 | | 1.1 | ND | 1.05 | | 1 | ND | 1.1 | | 1.1 | ND | 1.11 | | 1.1 | ND | 1.09 | | 1.1 |
| Isophorone | 78-59-1 | 100000 | ug/l | ND | 1.04 | | 1 | ND | 1.06 | | 1.1 | ND | 1.1 | | 1.1 | ND | 1.05 | | 1 | ND | 1.1 | | 1.1 | ND | 1.11 | | 1.1 | ND | 1.09 | | 1.1 |
| Isosafrole | 120-58-1 | 5 | ug/l | ND | 1.04 | | 1 | ND | 1.06 | | 1.1 | ND | 1.1 | | 1.1 | ND | 1.05 | | 1 | ND | 1.1 | | 1.1 | ND | 1.11 | | 1.1 | ND | 1.09 | | 1.1 |
| Kepone | 143-50-0 | 160 | ug/l | ND | 1.04 | | 4.2 | ND | 1.06 | | 4.2 | ND | 1.1 | | 4.4 | ND | 1.05 | | 4.2 | ND | 1.1 | | 4.4 | ND | 1.11 | | 4.4 | ND | 1.09 | | 4.4 |
| Methapyrilene | 91-80-5 | NS | ug/l | ND | 1.04 | | 1 | ND | 1.06 | | 1.1 | ND | 1.1 | | 1.1 | ND | 1.05 | | 1 | ND | 1.1 | | 1.1 | ND | 1.11 | | 1.1 | ND | 1.09 | | 1.1 |
| Methyl methanesulfonate | 66-27-3 | 26 | ug/l | ND | 1.04 | | 1 | ND | 1.06 | | 1.1 | ND | 1.1 | | 1.1 | ND | 1.05 | | 1 | ND | 1.1 | | 1.1 | ND | 1.11 | | 1.1 | ND | 1.09 | | 1.1 |
| Methyl parathion | 298-00-0 | 200 | ug/l | ND | 1.04 | | 1 | ND | 1.06 | | 1.1 | ND | 1.1 | | 1.1 | ND | 1.05 | | 1 | ND | 1.1 | | 1.1 | ND | 1.11 | | 1.1 | ND | 1.09 | | 1.1 |
| 3-Methylcholanthrene | 56-49-5 | NS | ug/l | ND | 1.04 | | 1 | ND | 1.06 | | 1.1 | ND | 1.1 | | 1.1 | ND | 1.05 | | 1 | ND | 1.1 | | 1.1 | ND | 1.11 | | 1.1 | ND | 1.09 | | 1.1 |
| 2-Methylnaphthalene | 91-57-6 | 2000 | ug/l | 0.017 | 1.04 | J | 0.21 | ND | 1.06 | | 0.21 | 0.021 | 1.1 | J B | 0.22 | 0.028 | 1.05 | J B | 0.21 | ND | 1.1 | | 0.22 | ND | 1.11 | | 0.22 | ND | 1.09 | | 0.22 |
| 3-Methylphenol & 4-Methylphenol | 65794-96-9 | NS | ug/l | ND | 1.04 | | 1 | ND | 1.06 | | 1.1 | 0.025 | 1.1 | J | 1.1 | ND | 1.05 | | 1 | ND | 1.1 | | 1.1 | ND | 1.11 | | 1.1 | 0.066 | 1.09 | J | 1.1 |
| Naphthalene | 91-20-3 | 30000 | ug/l | ND | 1.04 | | 0.21 | ND | 1.06 | | 0.21 | 0.031 | 1.1 | J B | 0.22 | ND | 1.05 | | 0.21 | ND | 1.1 | | 0.22 | ND | 1.11 | | 0.22 | ND | 1.09 | | 0.22 |
| 1,4-Naphthoquinone | 130-15-4 | 5 | ug/l | ND | 1.04 | | 1 | ND | 1.06 | | 1.1 | ND | 1.1 | | 1.1 | ND | 1.05 | | 1 | ND | 1.1 | | 1.1 | ND | 1.11 | | 1.1 | ND | 1.09 | | 1.1 |
| 1-Naphthylamine | 134-32-7 | 1400 | ug/l | ND | 1.04 | | 1 | ND | 1.06 | | 1.1 | ND | 1.1 | | 1.1 | ND | 1.05 | | 1 | ND | 1.1 | | 1.1 | ND | 1.11 | | 1.1 | ND | 1.09 | | 1.1 |
| 2-Naphthylamine | 91-59-8 | 1400 | ug/l | ND | 1.04 | | 1 | ND | 1.06 | | 1.1 | ND | 1.1 | | 1.1 | ND | 1.05 | | 1 | ND | 1.1 | | 1.1 | ND | 1.11 | | 1.1 | ND | 1.09 | | 1.1 |
| 2-Nitroaniline | 88-74-4 | 5.8 | ug/l | ND | 1.04 | | 5.2 | ND | 1.06 | | 5.3 | ND | 1.1 | | 5.5 | ND | 1.05 | | 5.2 | ND | 1.1 | | 5.5 | ND | 1.11 | | 5.6 | ND | 1.09 | | 5.4 |
| 3-Nitroaniline | 99-09-2 | 5.8 | ug/l | ND | 1.04 | | 5.2 | ND | 1.06 | | 5.3 | ND | 1.1 | | 5.5 | ND | 1.05 | | 5.2 | ND | 1.1 | | 5.5 | ND | 1.11 | | 5.6 | ND | 1.09 | | 5.4 |
| 4-Nitroaniline | 100-01-6 | 5.8 | ug/l | ND | 1.04 | | 5.2 | ND | 1.06 | | 5.3 | ND | 1.1 | | 5.5 | ND | 1.05 | | 5.2 | ND | 1.1 | | 5.5 | ND | 1.11 | | 5.6 | ND | 1.09 | | 5.4 |
| Nitrobenzene | 98-95-3 | 51000 | ug/l | ND | 1.04 | | 0.21 | ND | 1.06 | | 0.21 | ND | 1.1 | | 0.22 | ND | 1.05 | | 0.21 | ND | 1.1 | | 0.22 | ND | 1.11 | | 0.22 | ND | 1.09 | | 0.22 |
| 5-Nitro-o-toluidine | 99-55-8 | NS | ug/l | ND | 1.04 | | 10 | ND | 1.06 | | 11 | ND | 1.1 | | 11 | ND | 1.05 | | 10 | ND | 1.1 | | 11 | ND | 1.11 | | 11 | ND | 1.09 | | 11 |
| 2-Nitrophenol | 88-75-5 | 820000 | ug/l | ND | 1.04 | | 1 | ND | 1.06 | | 1.1 | ND | 1.1 | | 1.1 | ND | 1.05 | | 1 | ND | 1.1 | | 1.1 | ND | 1.11 | | 1.1 | ND | 1.09 | | 1.1 |
| 4-Nitrophenol | 100-02-7 | 60000 | ug/l | ND | 1.04 | | 5.2 | ND | 1.06 | | 5.3 | ND | 1.1 | | 5.5 | ND | 1.05 | | 5.2 | ND | 1.1 | | 5.5 | ND | 1.11 | | 5.6 | ND | 1.09 | | 5.4 |
| 4-Nitroquinoline-1-oxide | 56-57-5 | 5 | ug/l | ND | 1.04 | | ***10*** | ND | 1.06 | | ***11*** | ND | 1.1 | | ***11*** | ND | 1.05 | | ***10*** | ND | 1.1 | | ***11*** | ND | 1.11 | | ***11*** | ND | 1.09 | | ***11*** |
| N-Nitrosodiethylamine | 55-18-5 | 0.043 | ug/l | ND | 1.04 | | ***1*** | ND | 1.06 | | ***1.1*** | ND | 1.1 | | ***1.1*** | ND | 1.05 | | ***1*** | ND | 1.1 | | ***1.1*** | ND | 1.11 | | ***1.1*** | ND | 1.09 | | ***1.1*** |
| N-Nitrosodimethylamine | 62-75-9 | 0.13 | ug/l | ND | 1.04 | | ***1*** | ND | 1.06 | | ***1.1*** | ND | 1.1 | | ***1.1*** | ND | 1.05 | | ***1*** | ND | 1.1 | | ***1.1*** | ND | 1.11 | | ***1.1*** | ND | 1.09 | | ***1.1*** |
| N-Nitroso-di-n-butylamine | 924-16-3 | 11 | ug/l | ND | 1.04 | | 1 | ND | 1.06 | | 1.1 | ND | 1.1 | | 1.1 | ND | 1.05 | | 1 | ND | 1.1 | | 1.1 | ND | 1.11 | | 1.1 | ND | 1.09 | | 1.1 |
| N-nitrosodi-n-propylamine | 621-64-7 | 370 | ug/l | ND | 1.04 | | 0.21 | ND | 1.06 | | 0.21 | ND | 1.1 | | 0.22 | ND | 1.05 | | 0.21 | ND | 1.1 | | 0.22 | ND | 1.11 | | 0.22 | ND | 1.09 | | 0.22 |
| N-nitrosodiphenylamine | 86-30-6 | 35000 | ug/l | ND | 1.04 | | 0.21 | ND | 1.06 | | 0.21 | ND | 1.1 | | 0.22 | ND | 1.05 | | 0.21 | ND | 1.1 | | 0.22 | ND | 1.11 | | 0.22 | ND | 1.09 | | 0.22 |
| N-Nitrosomethylethylamine | 10595-95-6 | NS | ug/l | ND | 1.04 | | 1 | 0.64 | 1.06 | J | 1.1 | ND | 1.1 | | 1.1 | ND | 1.05 | | 1 | ND | 1.1 | | 1.1 | ND | 1.11 | | 1.1 | ND | 1.09 | | 1.1 |
| N-Nitrosomorpholine | 59-89-2 | NS | ug/l | ND | 1.04 | | 1 | ND | 1.06 | | 1.1 | ND | 1.1 | | 1.1 | ND | 1.05 | | 1 | ND | 1.1 | | 1.1 | ND | 1.11 | | 1.1 | ND | 1.09 | | 1.1 |
| N-Nitrosopiperidine | 100-75-4 | NS | ug/l | ND | 1.04 | | 1 | ND | 1.06 | | 1.1 | ND | 1.1 | | 1.1 | ND | 1.05 | | 1 | ND | 1.1 | | 1.1 | ND | 1.11 | | 1.1 | ND | 1.09 | | 1.1 |
| N-Nitrosopyrrolidine | 930-55-2 | NS | ug/l | ND | 1.04 | | 1 | ND | 1.06 | | 1.1 | ND | 1.1 | | 1.1 | ND | 1.05 | | 1 | ND | 1.1 | | 1.1 | ND | 1.11 | | 1.1 | ND | 1.09 | | 1.1 |
| Di-n-octylphthalate | 117-84-0 | 3000 | ug/l | ND | 1.04 | | 1 | 0.92 | 1.06 | J | 1.1 | ND | 1.1 | | 1.1 | ND | 1.05 | | 1 | ND | 1.1 | | 1.1 | ND | 1.11 | | 1.1 | 0.84 | 1.09 | J | 1.1 |
| Parathion | 56-38-2 | 610 | ug/l | ND | 1.04 | | 1 | ND | 1.06 | | 1.1 | ND | 1.1 | | 1.1 | ND | 1.05 | | 1 | ND | 1.1 | | 1.1 | ND | 1.11 | | 1.1 | ND | 1.09 | | 1.1 |
| Pentachlorobenzene | 608-93-5 | 740 | ug/l | ND | 1.04 | | 1 | ND | 1.06 | | 1.1 | ND | 1.1 | | 1.1 | ND | 1.05 | | 1 | ND | 1.1 | | 1.1 | ND | 1.11 | | 1.1 | ND | 1.09 | | 1.1 |
| Pentachloroethane | 76-01-7 | 5 | ug/l | ND | 1.04 | | 2.1 | ND | 1.06 | | 2.1 | ND | 1.1 | | 2.2 | ND | 1.05 | | 2.1 | ND | 1.1 | | 2.2 | ND | 1.11 | | 2.2 | ND | 1.09 | | 2.2 |
| Pentachloronitrobenzene | 82-68-8 | 440 | ug/l | ND | 1.04 | | 1 | ND | 1.06 | | 1.1 | ND | 1.1 | | 1.1 | ND | 1.05 | | 1 | ND | 1.1 | | 1.1 | ND | 1.11 | | 1.1 | ND | 1.09 | | 1.1 |
| Pentachlorophenol | 87-86-5 | 1000 | ug/l | ND | 1.04 | | 1 | ND | 1.06 | | 1.1 | ND | 1.1 | | 1.1 | ND | 1.05 | | 1 | ND | 1.1 | | 1.1 | ND | 1.11 | | 1.1 | ND | 1.09 | | 1.1 |
| Phenacetin | 62-44-2 | 760000 | ug/l | ND | 1.04 | | 1 | ND | 1.06 | | 1.1 | ND | 1.1 | | 1.1 | ND | 1.05 | | 1 | ND | 1.1 | | 1.1 | ND | 1.11 | | 1.1 | ND | 1.09 | | 1.1 |
| Phenanthrene | 85-01-8 | 1100 | ug/l | 0.079 | 1.04 | J B | 0.21 | 0.18 | 1.06 | J B | 0.21 | 0.14 | 1.1 | J B | 0.22 | 0.11 | 1.05 | J B | 0.21 | 0.095 | 1.1 | J B | 0.22 | 0.075 | 1.11 | J B | 0.22 | 0.088 | 1.09 | J B | 0.22 |
| Phenol | 108-95-2 | 400000 | ug/l | ND | 1.04 | | 0.21 | ND | 1.06 | | 0.21 | ND | 1.1 | | 0.22 | ND | 1.05 | | 0.21 | ND | 1.1 | | 0.22 | 0.076 | 1.11 | J | 0.22 | ND | 1.09 | | 0.22 |
| p-Phenylene diamine | 106-50-3 | NS | ug/l | ND | 1.04 | | 42 | ND | 1.06 | | 42 | ND | 1.1 | | 44 | ND | 1.05 | | 42 | ND | 1.1 | | 44 | ND | 1.11 | | 44 | ND | 1.09 | | 44 |
| Phorate | 298-02-2 | 4.1 | ug/l | ND | 1.04 | | 1 | ND | 1.06 | | 1.1 | ND | 1.1 | | 1.1 | ND | 1.05 | | 1 | ND | 1.1 | | 1.1 | ND | 1.11 | | 1.1 | ND | 1.09 | | 1.1 |
| 2-Picoline | 109-06-8 | 5 | ug/l | ND | 1.04 | | 1 | ND | 1.06 | | 1.1 | ND | 1.1 | | 1.1 | ND | 1.05 | | 1 | ND | 1.1 | | 1.1 | ND | 1.11 | | 1.1 | ND | 1.09 | | 1.1 |
| Pronamide | 23950-58-5 | 50 | ug/l | ND | 1.04 | | 1 | ND | 1.06 | | 1.1 | ND | 1.1 | | 1.1 | ND | 1.05 | | 1 | ND | 1.1 | | 1.1 | ND | 1.11 | | 1.1 | ND | 1.09 | | 1.1 |
| Pyrene | 129-00-0 | 130 | ug/l | ND | 1.04 | | 0.21 | 0.037 | 1.06 | J | 0.21 | ND | 1.1 | | 0.22 | ND | 1.05 | | 0.21 | ND | 1.1 | | 0.22 | ND | 1.11 | | 0.22 | ND | 1.09 | | 0.22 |
| Pyridine | 110-86-1 | 200 | ug/l | ND | 1.04 | | 1 | ND | 1.06 | | 1.1 | ND | 1.1 | | 1.1 | ND | 1.05 | | 1 | ND | 1.1 | | 1.1 | ND | 1.11 | | 1.1 | ND | 1.09 | | 1.1 |
| Safrole | 94-59-7 | NS | ug/l | ND | 1.04 | | 1 | ND | 1.06 | | 1.1 | ND | 1.1 | | 1.1 | ND | 1.05 | | 1 | ND | 1.1 | | 1.1 | ND | 1.11 | | 1.1 | ND | 1.09 | | 1.1 |
| Sulfotepp | 3689-24-5 | 10 | ug/l | ND | 1.04 | | 1 | ND | 1.06 | | 1.1 | ND | 1.1 | | 1.1 | ND | 1.05 | | 1 | ND | 1.1 | | 1.1 | ND | 1.11 | | 1.1 | ND | 1.09 | | 1.1 |
| 1,2,4,5-Tetrachlorobenzene | 95-94-3 | 580 | ug/l | ND | 1.04 | | 1 | ND | 1.06 | | 1.1 | ND | 1.1 | | 1.1 | ND | 1.05 | | 1 | ND | 1.1 | | 1.1 | ND | 1.11 | | 1.1 | ND | 1.09 | | 1.1 |
| 2,3,4,6-Tetrachlorophenol | 58-90-2 | 61000 | ug/l | ND | 1.04 | | 1 | ND | 1.06 | | 1.1 | ND | 1.1 | | 1.1 | ND | 1.05 | | 1 | ND | 1.1 | | 1.1 | ND | 1.11 | | 1.1 | ND | 1.09 | | 1.1 |
| Thionazin | 297-97-2 | 5 | ug/l | ND | 1.04 | | 1 | ND | 1.06 | | 1.1 | ND | 1.1 | | 1.1 | ND | 1.05 | | 1 | ND | 1.1 | | 1.1 | ND | 1.11 | | 1.1 | ND | 1.09 | | 1.1 |
| o-Toluidine | 95-53-4 | 11000 | ug/l | ND | 1.04 | | 1 | ND | 1.06 | | 1.1 | ND | 1.1 | | 1.1 | ND | 1.05 | | 1 | ND | 1.1 | | 1.1 | ND | 1.11 | | 1.1 | ND | 1.09 | | 1.1 |
| 1,2,4-Trichlorobenzene | 120-82-1 | 44000 | ug/l | ND | 1.04 | | 0.21 | ND | 1.06 | | 0.21 | ND | 1.1 | | 0.22 | ND | 1.05 | | 0.21 | ND | 1.1 | | 0.22 | ND | 1.11 | | 0.22 | ND | 1.09 | | 0.22 |
| 2,4,5-Trichlorophenol | 95-95-4 | 1000000 | ug/l | ND | 1.04 | | 1 | ND | 1.06 | | 1.1 | ND | 1.1 | | 1.1 | ND | 1.05 | | 1 | ND | 1.1 | | 1.1 | ND | 1.11 | | 1.1 | ND | 1.09 | | 1.1 |
| 2,4,6-Trichlorophenol | 88-06-2 | 31000 | ug/l | ND | 1.04 | | 1 | ND | 1.06 | | 1.1 | ND | 1.1 | | 1.1 | ND | 1.05 | | 1 | ND | 1.1 | | 1.1 | ND | 1.11 | | 1.1 | ND | 1.09 | | 1.1 |
| O,O,O-Triethyl phosphorothioate | 126-68-1 | 5 | ug/l | ND | 1.04 | | 1 | ND | 1.06 | | 1.1 | ND | 1.1 | | 1.1 | ND | 1.05 | | 1 | ND | 1.1 | | 1.1 | ND | 1.11 | | 1.1 | ND | 1.09 | | 1.1 |
| 1,3,5-Trinitrobenzene | 99-35-4 | NS | ug/l | ND | 1.04 | | 1 | ND | 1.06 | | 1.1 | ND | 1.1 | | 1.1 | ND | 1.05 | | 1 | ND | 1.1 | | 1.1 | ND | 1.11 | | 1.1 | ND | 1.09 | | 1.1 |

**Table 6**
**Summary of Groundwater Analytical Results - June 2009**
**Comparison to Pennsylvania Non-Residential Non-Use Aquifer Groundwater MSCs**
**U.S. Steel - RCRA Groundwater Sampling**
**Fairless Hills, Pennsylvania**

| | CAS No | PADEP Non-Residential Non-Use Aquifer GW MSC | Location ID | MW2-03-33 | | | | MW3-02-27 | | | | MW3-02-27 | | | | MW3-12-31 | | | | MW3-29-29 | | | | MW4-02-24 | | | | MW4-10-23 | | | | MW4-11-33 | | | |
|---|---|---|---|---|---|---|---|---|---|---|---|---|---|---|---|---|---|---|---|---|---|---|---|---|---|---|---|---|---|---|---|---|---|---|---|
| | | | Sample ID | MW2-03-33_061909 | | | | MW3-02-27_061809 | | | | DUP-01_061809 | | | | MW3-12-31_061909 | | | | MW3-29-29_061809 | | | | MW4-02-24_061809 | | | | MW4-10-23_061709 | | | | MW4-11-33_061909 | | | |
| | | | Sample Date | 6/19/2009 | | | | 6/18/2009 | | | | 6/18/2009 | | | | 6/19/2009 | | | | 6/18/2009 | | | | 6/18/2009 | | | | 6/17/2009 | | | | 6/19/2009 | | | |
| | | | Lab Id | C9F200181010 | | | | C9F190331001 | | | | C9F190331002 | | | | C9F200181002 | | | | C9F190331003 | | | | C9F190331014 | | | | C9F180195004 | | | | C9F200181003 | | | |
| ***RCRA APPENDIX IX SEMI-VOLATILE ORGANIC COMPOUNDS (Method 8270)*** | | | | Result | DF | Q | RL | Result | DF | Q | RL | Result | DF | Q | RL | Result | DF | Q | RL | Result | DF | Q | RL | Result | DF | Q | RL | Result | DF | Q | RL | Result | DF | Q | RL |
| Hexachloroethane | 67-72-1 | 100 | ug/l | ND | 1.08 | | 1.1 | ND | 1.04 | | 1 | ND | 1.04 | | 1 | ND | 1.05 | | 1 | ND | 1.1 | | 1.1 | ND | 1.12 | | 1.1 | ND | 1.12 | | 1.1 | ND | 1.04 | | 1 |
| Hexachloropropene | 1888-71-7 | 5 | ug/l | ND | 1.08 | | 1.1 | ND | 1.04 | | 1 | ND | 1.04 | | 1 | ND | 1.05 | | 1 | ND | 1.1 | | 1.1 | ND | 1.12 | | 1.1 | ND | 1.12 | | 1.1 | ND | 1.04 | | 1 |
| Indeno(1,2,3-cd)pyrene | 193-39-5 | 62 | ug/l | ND | 1.08 | | 0.22 | ND | 1.04 | | 0.21 | ND | 1.04 | | 0.21 | ND | 1.05 | | 0.21 | 1.2 | 1.1 | | 0.22 | 3.6 | 1.12 | | 0.22 | ND | 1.12 | | 0.22 | ND | 1.04 | | 0.21 |
| Isodrin | 465-73-6 | 5 | ug/l | ND | 1.08 | | 1.1 | ND | 1.04 | | 1 | ND | 1.04 | | 1 | ND | 1.05 | | 1 | ND | 1.1 | | 1.1 | ND | 1.12 | | 1.1 | ND | 1.12 | | 1.1 | ND | 1.04 | | 1 |
| Isophorone | 78-59-1 | 100000 | ug/l | ND | 1.08 | | 1.1 | ND | 1.04 | | 1 | ND | 1.04 | | 1 | ND | 1.05 | | 1 | ND | 1.1 | | 1.1 | ND | 1.12 | | 1.1 | ND | 1.12 | | 1.1 | ND | 1.04 | | 1 |
| Isosafrole | 120-58-1 | 5 | ug/l | ND | 1.08 | | 1.1 | ND | 1.04 | | 1 | ND | 1.04 | | 1 | ND | 1.05 | | 1 | ND | 1.1 | | 1.1 | ND | 1.12 | | 1.1 | ND | 1.12 | | 1.1 | ND | 1.04 | | 1 |
| Kepone | 143-50-0 | 160 | ug/l | ND | 1.08 | | 4.3 | ND | 1.04 | | 4.2 | ND | 1.04 | | 4.2 | ND | 1.05 | | 4.2 | ND | 1.1 | | 4.4 | ND | 1.12 | | 4.5 | ND | 1.12 | | 4.5 | ND | 1.04 | | 4.2 |
| Methapyrilene | 91-80-5 | NS | ug/l | ND | 1.08 | | 1.1 | ND | 1.04 | | 1 | ND | 1.04 | | 1 | ND | 1.05 | | 1 | ND | 1.1 | | 1.1 | ND | 1.12 | | 1.1 | ND | 1.12 | | 1.1 | ND | 1.04 | | 1 |
| Methyl methanesulfonate | 66-27-3 | 26 | ug/l | ND | 1.08 | | 1.1 | ND | 1.04 | | 1 | ND | 1.04 | | 1 | ND | 1.05 | | 1 | ND | 1.1 | | 1.1 | ND | 1.12 | | 1.1 | ND | 1.12 | | 1.1 | ND | 1.04 | | 1 |
| Methyl parathion | 298-00-0 | 200 | ug/l | ND | 1.08 | | 1.1 | ND | 1.04 | | 1 | ND | 1.04 | | 1 | ND | 1.05 | | 1 | ND | 1.1 | | 1.1 | ND | 1.12 | | 1.1 | ND | 1.12 | | 1.1 | ND | 1.04 | | 1 |
| 3-Methylcholanthrene | 56-49-5 | NS | ug/l | ND | 1.08 | | 1.1 | ND | 1.04 | | 1 | ND | 1.04 | | 1 | ND | 1.05 | | 1 | ND | 1.1 | | 1.1 | ND | 1.12 | | 1.1 | ND | 1.12 | | 1.1 | ND | 1.04 | | 1 |
| 2-Methylnaphthalene | 91-57-6 | 2000 | ug/l | 0.019 | 1.08 | J B | 0.22 | 0.062 | 1.04 | J | 0.21 | 0.055 | 1.04 | J | 0.21 | 0.14 | 1.05 | J B | 0.21 | ND | 1.1 | | 0.22 | 0.021 | 1.12 | J | 0.22 | ND | 1.12 | | 0.22 | 0.02 | 1.04 | J B | 0.21 |
| 3-Methylphenol & 4-Methylphenol | 65794-96-9 | NS | ug/l | ND | 1.08 | | 1.1 | ND | 1.04 | | 1 | ND | 1.04 | | 1 | 0.5 | 1.05 | J | 1 | ND | 1.1 | | 1.1 | 0.049 | 1.12 | J | 1.1 | 4 | 1.12 | | 1.1 | 0.2 | 1.04 | J | 1 |
| Naphthalene | 91-20-3 | 30000 | ug/l | ND | 1.08 | | 0.22 | 0.42 | 1.04 | | 0.21 | 0.43 | 1.04 | | 0.21 | 0.23 | 1.05 | B | 0.21 | ND | 1.1 | | 0.22 | ND | 1.12 | | 0.22 | ND | 1.12 | | 0.22 | 0.055 | 1.04 | J B | 0.21 |
| 1,4-Naphthoquinone | 130-15-4 | 5 | ug/l | ND | 1.08 | | 1.1 | ND | 1.04 | | 1 | ND | 1.04 | | 1 | ND | 1.05 | | 1 | ND | 1.1 | | 1.1 | ND | 1.12 | | 1.1 | ND | 1.12 | | 1.1 | ND | 1.04 | | 1 |
| 1-Naphthylamine | 134-32-7 | 1400 | ug/l | ND | 1.08 | | 1.1 | ND | 1.04 | | 1 | ND | 1.04 | | 1 | ND | 1.05 | | 1 | ND | 1.1 | | 1.1 | ND | 1.12 | | 1.1 | ND | 1.12 | | 1.1 | ND | 1.04 | | 1 |
| 2-Naphthylamine | 91-59-8 | 1400 | ug/l | ND | 1.08 | | 1.1 | ND | 1.04 | | 1 | ND | 1.04 | | 1 | ND | 1.05 | | 1 | ND | 1.1 | | 1.1 | ND | 1.12 | | 1.1 | ND | 1.12 | | 1.1 | ND | 1.04 | | 1 |
| 2-Nitroaniline | 88-74-4 | 5.8 | ug/l | ND | 1.08 | | 5.4 | ND | 1.04 | | 5.2 | ND | 1.04 | | 5.2 | ND | 1.05 | | 5.2 | ND | 1.1 | | 5.5 | ND | 1.12 | | 5.6 | ND | 1.12 | | 5.6 | ND | 1.04 | | 5.2 |
| 3-Nitroaniline | 99-09-2 | 5.8 | ug/l | ND | 1.08 | | 5.4 | ND | 1.04 | | 5.2 | ND | 1.04 | | 5.2 | ND | 1.05 | | 5.2 | ND | 1.1 | | 5.5 | ND | 1.12 | | 5.6 | ND | 1.12 | | 5.6 | ND | 1.04 | | 5.2 |
| 4-Nitroaniline | 100-01-6 | 5.8 | ug/l | ND | 1.08 | | 5.4 | ND | 1.04 | | 5.2 | ND | 1.04 | | 5.2 | ND | 1.05 | | 5.2 | ND | 1.1 | | 5.5 | ND | 1.12 | | 5.6 | ND | 1.12 | | 5.6 | ND | 1.04 | | 5.2 |
| Nitrobenzene | 98-95-3 | 51000 | ug/l | ND | 1.08 | | 0.22 | ND | 1.04 | | 0.21 | ND | 1.04 | | 0.21 | ND | 1.05 | | 0.21 | ND | 1.1 | | 0.22 | ND | 1.12 | | 0.22 | ND | 1.12 | | 0.22 | ND | 1.04 | | 0.21 |
| 5-Nitro-o-toluidine | 99-55-8 | NS | ug/l | ND | 1.08 | | 11 | ND | 1.04 | | 10 | ND | 1.04 | | 10 | ND | 1.05 | | 10 | ND | 1.1 | | 11 | ND | 1.12 | | 11 | ND | 1.12 | | 11 | ND | 1.04 | | 10 |
| 2-Nitrophenol | 88-75-5 | 820000 | ug/l | ND | 1.08 | | 1.1 | ND | 1.04 | | 1 | ND | 1.04 | | 1 | ND | 1.05 | | 1 | ND | 1.1 | | 1.1 | ND | 1.12 | | 1.1 | ND | 1.12 | | 1.1 | ND | 1.04 | | 1 |
| 4-Nitrophenol | 100-02-7 | 60000 | ug/l | ND | 1.08 | | 5.4 | ND | 1.04 | | 5.2 | ND | 1.04 | | 5.2 | ND | 1.05 | | 5.2 | ND | 1.1 | | 5.5 | ND | 1.12 | | 5.6 | ND | 1.12 | | 5.6 | ND | 1.04 | | 5.2 |
| 4-Nitroquinoline-1-oxide | 56-57-5 | 5 | ug/l | ND | 1.08 | | ***11*** | ND | 1.04 | | ***10*** | ND | 1.04 | | ***10*** | ND | 1.05 | | ***10*** | ND | 1.1 | | ***11*** | ND | 1.12 | | ***11*** | ND | 1.12 | | ***11*** | ND | 1.04 | | ***10*** |
| N-Nitrosodiethylamine | 55-18-5 | 0.043 | ug/l | ND | 1.08 | | ***1.1*** | ND | 1.04 | | ***1*** | ND | 1.04 | | ***1*** | ND | 1.05 | | ***1*** | ND | 1.1 | | ***1.1*** | ND | 1.12 | | ***1.1*** | ND | 1.12 | | ***1.1*** | ND | 1.04 | | ***1*** |
| N-Nitrosodimethylamine | 62-75-9 | 0.13 | ug/l | ND | 1.08 | | ***1.1*** | ND | 1.04 | | ***1*** | ND | 1.04 | | ***1*** | ND | 1.05 | | ***1*** | ND | 1.1 | | ***1.1*** | ND | 1.12 | | ***1.1*** | ND | 1.12 | | ***1.1*** | ND | 1.04 | | ***1*** |
| N-Nitroso-di-n-butylamine | 924-16-3 | 11 | ug/l | ND | 1.08 | | 1.1 | ND | 1.04 | | 1 | ND | 1.04 | | 1 | ND | 1.05 | | 1 | ND | 1.1 | | 1.1 | ND | 1.12 | | 1.1 | ND | 1.12 | | 1.1 | ND | 1.04 | | 1 |
| N-nitrosodi-n-propylamine | 621-64-7 | 370 | ug/l | ND | 1.08 | | 0.22 | ND | 1.04 | | 0.21 | ND | 1.04 | | 0.21 | ND | 1.05 | | 0.21 | ND | 1.1 | | 0.22 | ND | 1.12 | | 0.22 | ND | 1.12 | | 0.22 | ND | 1.04 | | 0.21 |
| N-nitrosodiphenylamine | 86-30-6 | 35000 | ug/l | ND | 1.08 | | 0.22 | ND | 1.04 | | 0.21 | ND | 1.04 | | 0.21 | ND | 1.05 | | 0.21 | ND | 1.1 | | 0.22 | ND | 1.12 | | 0.22 | ND | 1.12 | | 0.22 | ND | 1.04 | | 0.21 |
| N-Nitrosomethylethylamine | 10595-95-6 | NS | ug/l | ND | 1.08 | | 1.1 | ND | 1.04 | | 1 | ND | 1.04 | | 1 | ND | 1.05 | | 1 | ND | 1.1 | | 1.1 | ND | 1.12 | | 1.1 | ND | 1.12 | | 1.1 | ND | 1.04 | | 1 |
| N-Nitrosomorpholine | 59-89-2 | NS | ug/l | ND | 1.08 | | 1.1 | ND | 1.04 | | 1 | ND | 1.04 | | 1 | ND | 1.05 | | 1 | ND | 1.1 | | 1.1 | ND | 1.12 | | 1.1 | ND | 1.12 | | 1.1 | ND | 1.04 | | 1 |
| N-Nitrosopiperidine | 100-75-4 | NS | ug/l | ND | 1.08 | | 1.1 | ND | 1.04 | | 1 | ND | 1.04 | | 1 | ND | 1.05 | | 1 | ND | 1.1 | | 1.1 | ND | 1.12 | | 1.1 | ND | 1.12 | | 1.1 | ND | 1.04 | | 1 |
| N-Nitrosopyrrolidine | 930-55-2 | NS | ug/l | ND | 1.08 | | 1.1 | ND | 1.04 | | 1 | ND | 1.04 | | 1 | ND | 1.05 | | 1 | ND | 1.1 | | 1.1 | ND | 1.12 | | 1.1 | ND | 1.12 | | 1.1 | ND | 1.04 | | 1 |
| Di-n-octylphthalate | 117-84-0 | 3000 | ug/l | ND | 1.08 | | 1.1 | ND | 1.04 | | 1 | ND | 1.04 | | 1 | ND | 1.05 | | 1 | 0.94 | 1.1 | J | 1.1 | 2.1 | 1.12 | | 1.1 | ND | 1.12 | | 1.1 | ND | 1.04 | | 1 |
| Parathion | 56-38-2 | 610 | ug/l | ND | 1.08 | | 1.1 | ND | 1.04 | | 1 | ND | 1.04 | | 1 | ND | 1.05 | | 1 | ND | 1.1 | | 1.1 | ND | 1.12 | | 1.1 | ND | 1.12 | | 1.1 | ND | 1.04 | | 1 |
| Pentachlorobenzene | 608-93-5 | 740 | ug/l | ND | 1.08 | | 1.1 | ND | 1.04 | | 1 | ND | 1.04 | | 1 | ND | 1.05 | | 1 | ND | 1.1 | | 1.1 | ND | 1.12 | | 1.1 | ND | 1.12 | | 1.1 | ND | 1.04 | | 1 |
| Pentachloroethane | 76-01-7 | 5 | ug/l | ND | 1.08 | | 2.2 | ND | 1.04 | | 2.1 | ND | 1.04 | | 2.1 | ND | 1.05 | | 2.1 | ND | 1.1 | | 2.2 | ND | 1.12 | | 2.2 | ND | 1.12 | | 2.2 | ND | 1.04 | | 2.1 |
| Pentachloronitrobenzene | 82-68-8 | 440 | ug/l | ND | 1.08 | | 1.1 | ND | 1.04 | | 1 | ND | 1.04 | | 1 | ND | 1.05 | | 1 | ND | 1.1 | | 1.1 | ND | 1.12 | | 1.1 | ND | 1.12 | | 1.1 | ND | 1.04 | | 1 |
| Pentachlorophenol | 87-86-5 | 1000 | ug/l | ND | 1.08 | | 1.1 | ND | 1.04 | | 1 | ND | 1.04 | | 1 | ND | 1.05 | | 1 | ND | 1.1 | | 1.1 | ND | 1.12 | | 1.1 | ND | 1.12 | | 1.1 | ND | 1.04 | | 1 |
| Phenacetin | 62-44-2 | 760000 | ug/l | ND | 1.08 | | 1.1 | ND | 1.04 | | 1 | ND | 1.04 | | 1 | ND | 1.05 | | 1 | ND | 1.1 | | 1.1 | ND | 1.12 | | 1.1 | ND | 1.12 | | 1.1 | ND | 1.04 | | 1 |
| Phenanthrene | 85-01-8 | 1100 | ug/l | 0.15 | 1.08 | J B | 0.22 | 0.43 | 1.04 | B | 0.21 | 0.4 | 1.04 | B | 0.21 | 0.2 | 1.05 | J B | 0.21 | 0.066 | 1.1 | J B | 0.22 | 0.36 | 1.12 | B | 0.22 | 0.1 | 1.12 | J B | 0.22 | 0.11 | 1.04 | J B | 0.21 |
| Phenol | 108-95-2 | 400000 | ug/l | ND | 1.08 | | 0.22 | ND | 1.04 | | 0.21 | ND | 1.04 | | 0.21 | ND | 1.05 | | 0.21 | ND | 1.1 | | 0.22 | ND | 1.12 | | 0.22 | 0.66 | 1.12 | | 0.22 | ND | 1.04 | | 0.21 |
| p-Phenylene diamine | 106-50-3 | NS | ug/l | ND | 1.08 | | 43 | ND | 1.04 | | 42 | ND | 1.04 | | 42 | ND | 1.05 | | 42 | ND | 1.1 | | 44 | ND | 1.12 | | 45 | ND | 1.12 | | 45 | ND | 1.04 | | 42 |
| Phorate | 298-02-2 | 4.1 | ug/l | ND | 1.08 | | 1.1 | ND | 1.04 | | 1 | ND | 1.04 | | 1 | ND | 1.05 | | 1 | ND | 1.1 | | 1.1 | ND | 1.12 | | 1.1 | ND | 1.12 | | 1.1 | ND | 1.04 | | 1 |
| 2-Picoline | 109-06-8 | 5 | ug/l | ND | 1.08 | | 1.1 | ND | 1.04 | | 1 | ND | 1.04 | | 1 | ND | 1.05 | | 1 | ND | 1.1 | | 1.1 | ND | 1.12 | | 1.1 | ND | 1.12 | | 1.1 | ND | 1.04 | | 1 |
| Pronamide | 23950-58-5 | 50 | ug/l | ND | 1.08 | | 1.1 | ND | 1.04 | | 1 | ND | 1.04 | | 1 | ND | 1.05 | | 1 | ND | 1.1 | | 1.1 | ND | 1.12 | | 1.1 | ND | 1.12 | | 1.1 | ND | 1.04 | | 1 |
| Pyrene | 129-00-0 | 130 | ug/l | ND | 1.08 | | 0.22 | 0.58 | 1.04 | | 0.21 | 0.53 | 1.04 | | 0.21 | 0.083 | 1.05 | J | 0.21 | 0.062 | 1.1 | J | 0.22 | 0.74 | 1.12 | | 0.22 | ND | 1.12 | | 0.22 | 0.034 | 1.04 | J | 0.21 |
| Pyridine | 110-86-1 | 200 | ug/l | 0.32 | 1.08 | J B | 1.1 | ND | 1.04 | | 1 | ND | 1.04 | | 1 | ND | 1.05 | | 1 | ND | 1.1 | | 1.1 | ND | 1.12 | | 1.1 | ND | 1.12 | | 1.1 | ND | 1.04 | | 1 |
| Safrole | 94-59-7 | NS | ug/l | ND | 1.08 | | 1.1 | ND | 1.04 | | 1 | ND | 1.04 | | 1 | ND | 1.05 | | 1 | ND | 1.1 | | 1.1 | ND | 1.12 | | 1.1 | ND | 1.12 | | 1.1 | ND | 1.04 | | 1 |
| Sulfotepp | 3689-24-5 | 10 | ug/l | ND | 1.08 | | 1.1 | ND | 1.04 | | 1 | ND | 1.04 | | 1 | ND | 1.05 | | 1 | ND | 1.1 | | 1.1 | ND | 1.12 | | 1.1 | ND | 1.12 | | 1.1 | ND | 1.04 | | 1 |
| 1,2,4,5-Tetrachlorobenzene | 95-94-3 | 580 | ug/l | ND | 1.08 | | 1.1 | ND | 1.04 | | 1 | ND | 1.04 | | 1 | ND | 1.05 | | 1 | ND | 1.1 | | 1.1 | ND | 1.12 | | 1.1 | ND | 1.12 | | 1.1 | ND | 1.04 | | 1 |
| 2,3,4,6-Tetrachlorophenol | 58-90-2 | 61000 | ug/l | ND | 1.08 | | 1.1 | ND | 1.04 | | 1 | ND | 1.04 | | 1 | ND | 1.05 | | 1 | ND | 1.1 | | 1.1 | ND | 1.12 | | 1.1 | ND | 1.12 | | 1.1 | ND | 1.04 | | 1 |
| Thionazin | 297-97-2 | 5 | ug/l | ND | 1.08 | | 1.1 | ND | 1.04 | | 1 | ND | 1.04 | | 1 | ND | 1.05 | | 1 | ND | 1.1 | | 1.1 | ND | 1.12 | | 1.1 | ND | 1.12 | | 1.1 | ND | 1.04 | | 1 |
| o-Toluidine | 95-53-4 | 11000 | ug/l | ND | 1.08 | | 1.1 | 4.6 | 1.04 | | 1 | 4.5 | 1.04 | | 1 | ND | 1.05 | | 1 | ND | 1.1 | | 1.1 | ND | 1.12 | | 1.1 | ND | 1.12 | | 1.1 | ND | 1.04 | | 1 |
| 1,2,4-Trichlorobenzene | 120-82-1 | 44000 | ug/l | ND | 1.08 | | 0.22 | ND | 1.04 | | 0.21 | ND | 1.04 | | 0.21 | ND | 1.05 | | 0.21 | ND | 1.1 | | 0.22 | ND | 1.12 | | 0.22 | ND | 1.12 | | 0.22 | ND | 1.04 | | 0.21 |
| 2,4,5-Trichlorophenol | 95-95-4 | 1000000 | ug/l | ND | 1.08 | | 1.1 | ND | 1.04 | | 1 | ND | 1.04 | | 1 | ND | 1.05 | | 1 | ND | 1.1 | | 1.1 | ND | 1.12 | | 1.1 | ND | 1.12 | | 1.1 | ND | 1.04 | | 1 |
| 2,4,6-Trichlorophenol | 88-06-2 | 31000 | ug/l | ND | 1.08 | | 1.1 | ND | 1.04 | | 1 | ND | 1.04 | | 1 | ND | 1.05 | | 1 | ND | 1.1 | | 1.1 | ND | 1.12 | | 1.1 | ND | 1.12 | | 1.1 | ND | 1.04 | | 1 |
| O,O,O-Triethyl phosphorothioate | 126-68-1 | 5 | ug/l | ND | 1.08 | | 1.1 | ND | 1.04 | | 1 | ND | 1.04 | | 1 | ND | 1.05 | | 1 | ND | 1.1 | | 1.1 | ND | 1.12 | | 1.1 | ND | 1.12 | | 1.1 | ND | 1.04 | | 1 |
| 1,3,5-Trinitrobenzene | 99-35-4 | NS | ug/l | ND | 1.08 | | 1.1 | ND | 1.04 | | 1 | ND | 1.04 | | 1 | ND | 1.05 | | 1 | ND | 1.1 | | 1.1 | ND | 1.12 | | 1.1 | ND | 1.12 | | 1.1 | ND | 1.04 | | 1 |

**Table 6**
**Summary of Groundwater Analytical Results - June 2009**
**Comparison to Pennsylvania Non-Residential Non-Use Aquifer Groundwater MSCs**
**U.S. Steel - RCRA Groundwater Sampling**
**Fairless Hills, Pennsylvania**

| | CAS No | PADEP Non-Residential Non-Use Aquifer GW MSC | Location ID<br>Sample ID<br>Sample Date<br>Lab Id | MW4-14-36<br>MW4-14-36_061909<br>6/19/2009<br>C9F200181006 | | | | MW4-30-63<br>MW4-30-63_061909<br>6/19/2009<br>C9F200181012 | | | | MW4-30-63<br>DUP-02_061909<br>6/19/2009<br>C9F200181013 | | | | MW4-33-25<br>MW4-33-25_061909<br>6/19/2009<br>C9F200181011 | | | | MW5-07-24<br>MW5-07-24_061809<br>6/18/2009<br>C9F190331005 | | | | MW5-18-26<br>MW5-18-26_061709<br>6/17/2009<br>C9F180195002 | | | | MW5-41-19<br>MW5-41-19_061709<br>6/17/2009<br>C9F180195001 | | | | MW6-02-27<br>MW6-02-27_061909<br>6/19/2009<br>C9F200181004 | | | |
|---|---|---|---|---|---|---|---|---|---|---|---|---|---|---|---|---|---|---|---|---|---|---|---|---|---|---|---|---|---|---|---|---|---|
| ***RCRA APPENDIX IX SEMI-VOLATILE ORGANIC COMPOUNDS (Method 8270)*** | | | | Result | DF | Q | RL | Result | DF | Q | RL | Result | DF | Q | RL | Result | DF | Q | RL | Result | DF | Q | RL | Result | DF | Q | RL | Result | DF | Q | RL | Result | DF | Q | RL |
| Hexachloroethane | 67-72-1 | 100 | ug/l | ND | 1.14 | | 1.1 | ND | 1.09 | | 1.1 | ND | 1.09 | | 1.1 | ND | 1.09 | | 1.1 | ND | 1.05 | | 1 | ND | 1.05 | | 1 | ND | 1.04 | | 1 | ND | 1.05 | | 1 |
| Hexachloropropene | 1888-71-7 | 5 | ug/l | ND | 1.14 | | 1.1 | ND | 1.09 | | 1.1 | ND | 1.09 | | 1.1 | ND | 1.09 | | 1.1 | ND | 1.05 | | 1 | ND | 1.05 | | 1 | ND | 1.04 | | 1 | ND | 1.05 | | 1 |
| Indeno(1,2,3-cd)pyrene | 193-39-5 | 62 | ug/l | ND | 1.14 | | 0.23 | ND | 1.09 | | 0.22 | ND | 1.09 | | 0.22 | ND | 1.09 | | 0.22 | ND | 1.05 | | 0.21 | ND | 1.05 | | 0.21 | ND | 1.04 | | 0.21 | ND | 1.05 | | 0.21 |
| Isodrin | 465-73-6 | 5 | ug/l | ND | 1.14 | | 1.1 | ND | 1.09 | | 1.1 | ND | 1.09 | | 1.1 | ND | 1.09 | | 1.1 | ND | 1.05 | | 1 | ND | 1.05 | | 1 | ND | 1.04 | | 1 | ND | 1.05 | | 1 |
| Isophorone | 78-59-1 | 100000 | ug/l | ND | 1.14 | | 1.1 | ND | 1.09 | | 1.1 | ND | 1.09 | | 1.1 | ND | 1.09 | | 1.1 | ND | 1.05 | | 1 | 0.086 | 1.05 | J | 1 | ND | 1.04 | | 1 | ND | 1.05 | | 1 |
| Isosafrole | 120-58-1 | 5 | ug/l | ND | 1.14 | | 1.1 | ND | 1.09 | | 1.1 | ND | 1.09 | | 1.1 | ND | 1.09 | | 1.1 | ND | 1.05 | | 1 | ND | 1.05 | | 1 | ND | 1.04 | | 1 | ND | 1.05 | | 1 |
| Kepone | 143-50-0 | 160 | ug/l | ND | 1.14 | | 4.6 | ND | 1.09 | | 4.4 | ND | 1.09 | | 4.4 | ND | 1.09 | | 4.4 | ND | 1.05 | | 4.2 | ND | 1.05 | | 4.2 | ND | 1.04 | | 4.2 | ND | 1.05 | | 4.2 |
| Methapyrilene | 91-80-5 | NS | ug/l | ND | 1.14 | | 1.1 | ND | 1.09 | | 1.1 | ND | 1.09 | | 1.1 | ND | 1.09 | | 1.1 | ND | 1.05 | | 1 | ND | 1.05 | | 1 | ND | 1.04 | | 1 | ND | 1.05 | | 1 |
| Methyl methanesulfonate | 66-27-3 | 26 | ug/l | ND | 1.14 | | 1.1 | ND | 1.09 | | 1.1 | ND | 1.09 | | 1.1 | ND | 1.09 | | 1.1 | ND | 1.05 | | 1 | ND | 1.05 | | 1 | ND | 1.04 | | 1 | ND | 1.05 | | 1 |
| Methyl parathion | 298-00-0 | 200 | ug/l | ND | 1.14 | | 1.1 | ND | 1.09 | | 1.1 | ND | 1.09 | | 1.1 | ND | 1.09 | | 1.1 | ND | 1.05 | | 1 | ND | 1.05 | | 1 | ND | 1.04 | | 1 | ND | 1.05 | | 1 |
| 3-Methylcholanthrene | 56-49-5 | NS | ug/l | ND | 1.14 | | 1.1 | ND | 1.09 | | 1.1 | ND | 1.09 | | 1.1 | ND | 1.09 | | 1.1 | ND | 1.05 | | 1 | ND | 1.05 | | 1 | ND | 1.04 | | 1 | ND | 1.05 | | 1 |
| 2-Methylnaphthalene | 91-57-6 | 2000 | ug/l | 0.022 | 1.14 | J B | 0.23 | 0.022 | 1.09 | J B | 0.22 | 0.025 | 1.09 | J B | 0.22 | ND | 1.09 | | 0.22 | 0.16 | 1.05 | J | 0.21 | 0.037 | 1.05 | J | 0.21 | ND | 1.04 | | 0.21 | 0.022 | 1.05 | J B | 0.21 |
| 3-Methylphenol & 4-Methylphenol | 65794-96-9 | NS | ug/l | ND | 1.14 | | 1.1 | 0.065 | 1.09 | J | 1.1 | 0.098 | 1.09 | J | 1.1 | 0.026 | 1.09 | J | 1.1 | ND | 1.05 | | 1 | 1 | 1.05 | | 1 | 0.032 | 1.04 | J | 1 | ND | 1.05 | | 1 |
| Naphthalene | 91-20-3 | 30000 | ug/l | ND | 1.14 | | 0.23 | ND | 1.09 | | 0.22 | 0.033 | 1.09 | J B | 0.22 | 0.035 | 1.09 | J B | 0.22 | 9.3 | 1.05 | | 0.21 | 0.14 | 1.05 | J | 0.21 | ND | 1.04 | | 0.21 | 0.057 | 1.05 | J B | 0.21 |
| 1,4-Naphthoquinone | 130-15-4 | 5 | ug/l | ND | 1.14 | | 1.1 | ND | 1.09 | | 1.1 | ND | 1.09 | | 1.1 | ND | 1.09 | | 1.1 | 0.41 | 1.05 | J | 1 | ND | 1.05 | | 1 | ND | 1.04 | | 1 | ND | 1.05 | | 1 |
| 1-Naphthylamine | 134-32-7 | 1400 | ug/l | ND | 1.14 | | 1.1 | ND | 1.09 | | 1.1 | ND | 1.09 | | 1.1 | ND | 1.09 | | 1.1 | 0.22 | 1.05 | J | 1 | ND | 1.05 | | 1 | ND | 1.04 | | 1 | ND | 1.05 | | 1 |
| 2-Naphthylamine | 91-59-8 | 1400 | ug/l | ND | 1.14 | | 1.1 | ND | 1.09 | | 1.1 | ND | 1.09 | | 1.1 | ND | 1.09 | | 1.1 | 0.71 | 1.05 | J | 1 | ND | 1.05 | | 1 | ND | 1.04 | | 1 | ND | 1.05 | | 1 |
| 2-Nitroaniline | 88-74-4 | 5.8 | ug/l | ND | 1.14 | | 5.7 | ND | 1.09 | | 5.4 | ND | 1.09 | | 5.4 | ND | 1.09 | | 5.4 | ND | 1.05 | | 5.2 | ND | 1.05 | | 5.2 | ND | 1.04 | | 5.2 | ND | 1.05 | | 5.2 |
| 3-Nitroaniline | 99-09-2 | 5.8 | ug/l | ND | 1.14 | | 5.7 | ND | 1.09 | | 5.4 | ND | 1.09 | | 5.4 | ND | 1.09 | | 5.4 | ND | 1.05 | | 5.2 | ND | 1.05 | | 5.2 | ND | 1.04 | | 5.2 | ND | 1.05 | | 5.2 |
| 4-Nitroaniline | 100-01-6 | 5.8 | ug/l | ND | 1.14 | | 5.7 | ND | 1.09 | | 5.4 | ND | 1.09 | | 5.4 | ND | 1.09 | | 5.4 | ND | 1.05 | | 5.2 | ND | 1.05 | | 5.2 | ND | 1.04 | | 5.2 | ND | 1.05 | | 5.2 |
| Nitrobenzene | 98-95-3 | 51000 | ug/l | ND | 1.14 | | 0.23 | ND | 1.09 | | 0.22 | ND | 1.09 | | 0.22 | ND | 1.09 | | 0.22 | ND | 1.05 | | 0.21 | ND | 1.05 | | 0.21 | ND | 1.04 | | 0.21 | ND | 1.05 | | 0.21 |
| 5-Nitro-o-toluidine | 99-55-8 | NS | ug/l | ND | 1.14 | | 11 | ND | 1.09 | | 11 | ND | 1.09 | | 11 | ND | 1.09 | | 11 | ND | 1.05 | | 10 | ND | 1.05 | | 10 | ND | 1.04 | | 10 | ND | 1.05 | | 10 |
| 2-Nitrophenol | 88-75-5 | 820000 | ug/l | ND | 1.14 | | 1.1 | ND | 1.09 | | 1.1 | ND | 1.09 | | 1.1 | ND | 1.09 | | 1.1 | ND | 1.05 | | 1 | ND | 1.05 | | 1 | ND | 1.04 | | 1 | ND | 1.05 | | 1 |
| 4-Nitrophenol | 100-02-7 | 60000 | ug/l | ND | 1.14 | | 5.7 | ND | 1.09 | | 5.4 | ND | 1.09 | | 5.4 | ND | 1.09 | | 5.4 | ND | 1.05 | | 5.2 | ND | 1.05 | | 5.2 | ND | 1.04 | | 5.2 | ND | 1.05 | | 5.2 |
| 4-Nitroquinoline-1-oxide | 56-57-5 | 5 | ug/l | ND | 1.14 | | ***11*** | ND | 1.09 | | ***11*** | ND | 1.09 | | ***11*** | ND | 1.09 | | ***11*** | ND | 1.05 | | ***10*** | ND | 1.05 | | ***10*** | ND | 1.04 | | ***10*** | ND | 1.05 | | ***10*** |
| N-Nitrosodiethylamine | 55-18-5 | 0.043 | ug/l | ND | 1.14 | | ***1.1*** | ND | 1.09 | | ***1.1*** | ND | 1.09 | | ***1.1*** | ND | 1.09 | | ***1.1*** | ND | 1.05 | | ***1*** | ND | 1.05 | | ***1*** | ND | 1.04 | | ***1*** | ND | 1.05 | | ***1*** |
| N-Nitrosodimethylamine | 62-75-9 | 0.13 | ug/l | ND | 1.14 | | ***1.1*** | ND | 1.09 | | ***1.1*** | ND | 1.09 | | ***1.1*** | ND | 1.09 | | ***1.1*** | ND | 1.05 | | ***1*** | ND | 1.05 | | ***1*** | ND | 1.04 | | ***1*** | ND | 1.05 | | ***1*** |
| N-Nitroso-di-n-butylamine | 924-16-3 | 11 | ug/l | 0.91 | 1.14 | J | 1.1 | ND | 1.09 | | 1.1 | ND | 1.09 | | 1.1 | ND | 1.09 | | 1.1 | ND | 1.05 | | 1 | ND | 1.05 | | 1 | ND | 1.04 | | 1 | ND | 1.05 | | 1 |
| N-nitrosodi-n-propylamine | 621-64-7 | 370 | ug/l | ND | 1.14 | | 0.23 | ND | 1.09 | | 0.22 | ND | 1.09 | | 0.22 | ND | 1.09 | | 0.22 | ND | 1.05 | | 0.21 | ND | 1.05 | | 0.21 | ND | 1.04 | | 0.21 | ND | 1.05 | | 0.21 |
| N-nitrosodiphenylamine | 86-30-6 | 35000 | ug/l | ND | 1.14 | | 0.23 | ND | 1.09 | | 0.22 | ND | 1.09 | | 0.22 | ND | 1.09 | | 0.22 | ND | 1.05 | | 0.21 | ND | 1.05 | | 0.21 | ND | 1.04 | | 0.21 | ND | 1.05 | | 0.21 |
| N-Nitrosomethylethylamine | 10595-95-6 | NS | ug/l | ND | 1.14 | | 1.1 | ND | 1.09 | | 1.1 | ND | 1.09 | | 1.1 | ND | 1.09 | | 1.1 | ND | 1.05 | | 1 | ND | 1.05 | | 1 | ND | 1.04 | | 1 | ND | 1.05 | | 1 |
| N-Nitrosomorpholine | 59-89-2 | NS | ug/l | ND | 1.14 | | 1.1 | ND | 1.09 | | 1.1 | ND | 1.09 | | 1.1 | ND | 1.09 | | 1.1 | ND | 1.05 | | 1 | ND | 1.05 | | 1 | ND | 1.04 | | 1 | ND | 1.05 | | 1 |
| N-Nitrosopiperidine | 100-75-4 | NS | ug/l | ND | 1.14 | | 1.1 | ND | 1.09 | | 1.1 | ND | 1.09 | | 1.1 | ND | 1.09 | | 1.1 | ND | 1.05 | | 1 | ND | 1.05 | | 1 | ND | 1.04 | | 1 | ND | 1.05 | | 1 |
| N-Nitrosopyrrolidine | 930-55-2 | NS | ug/l | ND | 1.14 | | 1.1 | ND | 1.09 | | 1.1 | ND | 1.09 | | 1.1 | ND | 1.09 | | 1.1 | ND | 1.05 | | 1 | ND | 1.05 | | 1 | ND | 1.04 | | 1 | ND | 1.05 | | 1 |
| Di-n-octylphthalate | 117-84-0 | 3000 | ug/l | ND | 1.14 | | 1.1 | ND | 1.09 | | 1.1 | ND | 1.09 | | 1.1 | ND | 1.09 | | 1.1 | ND | 1.05 | | 1 | 0.9 | 1.05 | J B | 1 | ND | 1.04 | | 1 | ND | 1.05 | | 1 |
| Parathion | 56-38-2 | 610 | ug/l | ND | 1.14 | | 1.1 | ND | 1.09 | | 1.1 | ND | 1.09 | | 1.1 | ND | 1.09 | | 1.1 | ND | 1.05 | | 1 | ND | 1.05 | | 1 | ND | 1.04 | | 1 | ND | 1.05 | | 1 |
| Pentachlorobenzene | 608-93-5 | 740 | ug/l | ND | 1.14 | | 1.1 | ND | 1.09 | | 1.1 | ND | 1.09 | | 1.1 | ND | 1.09 | | 1.1 | ND | 1.05 | | 1 | ND | 1.05 | | 1 | ND | 1.04 | | 1 | ND | 1.05 | | 1 |
| Pentachloroethane | 76-01-7 | 5 | ug/l | ND | 1.14 | | 2.3 | ND | 1.09 | | 2.2 | ND | 1.09 | | 2.2 | ND | 1.09 | | 2.2 | ND | 1.05 | | 2.1 | ND | 1.05 | | 2.1 | ND | 1.04 | | 2.1 | ND | 1.05 | | 2.1 |
| Pentachloronitrobenzene | 82-68-8 | 440 | ug/l | ND | 1.14 | | 1.1 | ND | 1.09 | | 1.1 | ND | 1.09 | | 1.1 | ND | 1.09 | | 1.1 | ND | 1.05 | | 1 | ND | 1.05 | | 1 | ND | 1.04 | | 1 | ND | 1.05 | | 1 |
| Pentachlorophenol | 87-86-5 | 1000 | ug/l | ND | 1.14 | | 1.1 | ND | 1.09 | | 1.1 | ND | 1.09 | | 1.1 | ND | 1.09 | | 1.1 | ND | 1.05 | | 1 | ND | 1.05 | | 1 | ND | 1.04 | | 1 | ND | 1.05 | | 1 |
| Phenacetin | 62-44-2 | 760000 | ug/l | ND | 1.14 | | 1.1 | ND | 1.09 | | 1.1 | ND | 1.09 | | 1.1 | ND | 1.09 | | 1.1 | ND | 1.05 | | 1 | ND | 1.05 | | 1 | ND | 1.04 | | 1 | ND | 1.05 | | 1 |
| Phenanthrene | 85-01-8 | 1100 | ug/l | 0.12 | 1.14 | J B | 0.23 | 0.13 | 1.09 | J B | 0.22 | 0.17 | 1.09 | J B | 0.22 | 0.16 | 1.09 | J B | 0.22 | 0.14 | 1.05 | J B | 0.21 | 0.15 | 1.05 | J B | 0.21 | 0.086 | 1.04 | J B | 0.21 | 0.18 | 1.05 | J B | 0.21 |
| Phenol | 108-95-2 | 400000 | ug/l | ND | 1.14 | | 0.23 | ND | 1.09 | | 0.22 | 0.13 | 1.09 | J | 0.22 | ND | 1.09 | | 0.22 | ND | 1.05 | | 0.21 | 5.5 | 1.05 | | 0.21 | ND | 1.04 | | 0.21 | ND | 1.05 | | 0.21 |
| p-Phenylene diamine | 106-50-3 | NS | ug/l | ND | 1.14 | | 46 | ND | 1.09 | | 44 | ND | 1.09 | | 44 | ND | 1.09 | | 44 | ND | 1.05 | | 42 | ND | 1.05 | | 42 | ND | 1.04 | | 42 | ND | 1.05 | | 42 |
| Phorate | 298-02-2 | 4.1 | ug/l | ND | 1.14 | | 1.1 | ND | 1.09 | | 1.1 | ND | 1.09 | | 1.1 | ND | 1.09 | | 1.1 | ND | 1.05 | | 1 | ND | 1.05 | | 1 | ND | 1.04 | | 1 | ND | 1.05 | | 1 |
| 2-Picoline | 109-06-8 | 5 | ug/l | ND | 1.14 | | 1.1 | ND | 1.09 | | 1.1 | ND | 1.09 | | 1.1 | ND | 1.09 | | 1.1 | ND | 1.05 | | 1 | ND | 1.05 | | 1 | ND | 1.04 | | 1 | ND | 1.05 | | 1 |
| Pronamide | 23950-58-5 | 50 | ug/l | ND | 1.14 | | 1.1 | ND | 1.09 | | 1.1 | ND | 1.09 | | 1.1 | ND | 1.09 | | 1.1 | ND | 1.05 | | 1 | ND | 1.05 | | 1 | ND | 1.04 | | 1 | ND | 1.05 | | 1 |
| Pyrene | 129-00-0 | 130 | ug/l | ND | 1.14 | | 0.23 | 0.026 | 1.09 | J | 0.22 | ND | 1.09 | | 0.22 | 0.034 | 1.09 | J | 0.22 | 0.051 | 1.05 | J | 0.21 | 0.037 | 1.05 | J | 0.21 | ND | 1.04 | | 0.21 | 0.13 | 1.05 | J | 0.21 |
| Pyridine | 110-86-1 | 200 | ug/l | ND | 1.14 | | 1.1 | ND | 1.09 | | 1.1 | 0.1 | 1.09 | J B | 1.1 | ND | 1.09 | | 1.1 | ND | 1.05 | | 1 | ND | 1.05 | | 1 | ND | 1.04 | | 1 | ND | 1.05 | | 1 |
| Safrole | 94-59-7 | NS | ug/l | ND | 1.14 | | 1.1 | ND | 1.09 | | 1.1 | ND | 1.09 | | 1.1 | ND | 1.09 | | 1.1 | ND | 1.05 | | 1 | ND | 1.05 | | 1 | ND | 1.04 | | 1 | ND | 1.05 | | 1 |
| Sulfotepp | 3689-24-5 | 10 | ug/l | ND | 1.14 | | 1.1 | ND | 1.09 | | 1.1 | ND | 1.09 | | 1.1 | ND | 1.09 | | 1.1 | ND | 1.05 | | 1 | ND | 1.05 | | 1 | ND | 1.04 | | 1 | ND | 1.05 | | 1 |
| 1,2,4,5-Tetrachlorobenzene | 95-94-3 | 580 | ug/l | ND | 1.14 | | 1.1 | ND | 1.09 | | 1.1 | ND | 1.09 | | 1.1 | ND | 1.09 | | 1.1 | ND | 1.05 | | 1 | ND | 1.05 | | 1 | ND | 1.04 | | 1 | ND | 1.05 | | 1 |
| 2,3,4,6-Tetrachlorophenol | 58-90-2 | 61000 | ug/l | ND | 1.14 | | 1.1 | ND | 1.09 | | 1.1 | ND | 1.09 | | 1.1 | ND | 1.09 | | 1.1 | ND | 1.05 | | 1 | ND | 1.05 | | 1 | ND | 1.04 | | 1 | ND | 1.05 | | 1 |
| Thionazin | 297-97-2 | 5 | ug/l | ND | 1.14 | | 1.1 | ND | 1.09 | | 1.1 | ND | 1.09 | | 1.1 | ND | 1.09 | | 1.1 | ND | 1.05 | | 1 | ND | 1.05 | | 1 | ND | 1.04 | | 1 | ND | 1.05 | | 1 |
| o-Toluidine | 95-53-4 | 11000 | ug/l | ND | 1.14 | | 1.1 | ND | 1.09 | | 1.1 | ND | 1.09 | | 1.1 | ND | 1.09 | | 1.1 | 1 | 1.05 | | 1 | ND | 1.05 | | 1 | ND | 1.04 | | 1 | ND | 1.05 | | 1 |
| 1,2,4-Trichlorobenzene | 120-82-1 | 44000 | ug/l | ND | 1.14 | | 0.23 | ND | 1.09 | | 0.22 | ND | 1.09 | | 0.22 | ND | 1.09 | | 0.22 | ND | 1.05 | | 0.21 | ND | 1.05 | | 0.21 | ND | 1.04 | | 0.21 | ND | 1.05 | | 0.21 |
| 2,4,5-Trichlorophenol | 95-95-4 | 1000000 | ug/l | ND | 1.14 | | 1.1 | ND | 1.09 | | 1.1 | ND | 1.09 | | 1.1 | ND | 1.09 | | 1.1 | ND | 1.05 | | 1 | ND | 1.05 | | 1 | ND | 1.04 | | 1 | ND | 1.05 | | 1 |
| 2,4,6-Trichlorophenol | 88-06-2 | 31000 | ug/l | ND | 1.14 | | 1.1 | ND | 1.09 | | 1.1 | ND | 1.09 | | 1.1 | ND | 1.09 | | 1.1 | ND | 1.05 | | 1 | ND | 1.05 | | 1 | ND | 1.04 | | 1 | ND | 1.05 | | 1 |
| O,O,O-Triethyl phosphorothioate | 126-68-1 | 5 | ug/l | ND | 1.14 | | 1.1 | ND | 1.09 | | 1.1 | ND | 1.09 | | 1.1 | ND | 1.09 | | 1.1 | ND | 1.05 | | 1 | ND | 1.05 | | 1 | ND | 1.04 | | 1 | ND | 1.05 | | 1 |
| 1,3,5-Trinitrobenzene | 99-35-4 | NS | ug/l | ND | 1.14 | | 1.1 | ND | 1.09 | | 1.1 | ND | 1.09 | | 1.1 | ND | 1.09 | | 1.1 | ND | 1.05 | | 1 | ND | 1.05 | | 1 | ND | 1.04 | | 1 | ND | 1.05 | | 1 |

**Table 6**
**Summary of Groundwater Analytical Results - June 2009**
**Comparison to Pennsylvania Non-Residential Non-Use Aquifer Groundwater MSCs**
**U.S. Steel - RCRA Groundwater Sampling**
**Fairless Hills, Pennsylvania**

| | CAS No | PADEP Non-Residential Non-Use Aquifer GW MSC | Location ID<br>Sample ID<br>Sample Date<br>Lab Id | MW6-05-28<br>MW6-05-28_061909<br>6/19/2009<br>C9F200181007 | | | | MW6-06-24<br>MW6-06-24_061909<br>6/19/2009<br>C9F200181008 | | | | MW6-08-28<br>MW6-08-28_061809<br>6/18/2009<br>C9F190331009 | | | | MW6-12-42<br>MW6-12-42_061809<br>6/18/2009<br>C9F190331010 | | | | MW6-20-37<br>MW6-20-37_061909<br>6/19/2009<br>C9F200181005 | | | | MW7-04-26<br>MW7-04-26_061809<br>6/18/2009<br>C9F190331008 | | | | MW7-05-28<br>MW7-05-28_061809<br>6/18/2009<br>C9F190331007 | | | |
|---|---|---|---|---|---|---|---|---|---|---|---|---|---|---|---|---|---|---|---|---|---|---|---|---|---|---|---|---|---|
| ***RCRA APPENDIX IX SEMI-VOLATILE ORGANIC COMPOUNDS (Method 8270)*** | | | | Result | DF | Q | RL | Result | DF | Q | RL | Result | DF | Q | RL | Result | DF | Q | RL | Result | DF | Q | RL | Result | DF | Q | RL | Result | DF | Q | RL |
| Hexachloroethane | 67-72-1 | 100 | ug/l | ND | 1.08 | | 1.1 | ND | 1.06 | | 1.1 | ND | 1.18 | | 1.2 | ND | 1.1 | | 1.1 | ND | 1.08 | | 1.1 | ND | 1.16 | | 1.2 | ND | 1.1 | | 1.1 |
| Hexachloropropene | 1888-71-7 | 5 | ug/l | ND | 1.08 | | 1.1 | ND | 1.06 | | 1.1 | ND | 1.18 | | 1.2 | ND | 1.1 | | 1.1 | ND | 1.08 | | 1.1 | ND | 1.16 | | 1.2 | ND | 1.1 | | 1.1 |
| Indeno(1,2,3-cd)pyrene | 193-39-5 | 62 | ug/l | ND | 1.08 | | 0.22 | ND | 1.06 | | 0.21 | 1.2 | 1.18 | | 0.24 | ND | 1.1 | | 0.22 | ND | 1.08 | | 0.22 | 1.2 | 1.16 | | 0.23 | ND | 1.1 | | 0.22 |
| Isodrin | 465-73-6 | 5 | ug/l | ND | 1.08 | | 1.1 | ND | 1.06 | | 1.1 | ND | 1.18 | | 1.2 | ND | 1.1 | | 1.1 | ND | 1.08 | | 1.1 | ND | 1.16 | | 1.2 | ND | 1.1 | | 1.1 |
| Isophorone | 78-59-1 | 100000 | ug/l | ND | 1.08 | | 1.1 | ND | 1.06 | | 1.1 | ND | 1.18 | | 1.2 | ND | 1.1 | | 1.1 | ND | 1.08 | | 1.1 | ND | 1.16 | | 1.2 | ND | 1.1 | | 1.1 |
| Isosafrole | 120-58-1 | 5 | ug/l | ND | 1.08 | | 1.1 | ND | 1.06 | | 1.1 | ND | 1.18 | | 1.2 | ND | 1.1 | | 1.1 | ND | 1.08 | | 1.1 | ND | 1.16 | | 1.2 | ND | 1.1 | | 1.1 |
| Kepone | 143-50-0 | 160 | ug/l | ND | 1.08 | | 4.3 | ND | 1.06 | | 4.2 | ND | 1.18 | | 4.7 | ND | 1.1 | | 4.4 | ND | 1.08 | | 4.3 | ND | 1.16 | | 4.6 | ND | 1.1 | | 4.4 |
| Methapyrilene | 91-80-5 | NS | ug/l | ND | 1.08 | | 1.1 | ND | 1.06 | | 1.1 | ND | 1.18 | | 1.2 | ND | 1.1 | | 1.1 | ND | 1.08 | | 1.1 | ND | 1.16 | | 1.2 | ND | 1.1 | | 1.1 |
| Methyl methanesulfonate | 66-27-3 | 26 | ug/l | ND | 1.08 | | 1.1 | ND | 1.06 | | 1.1 | ND | 1.18 | | 1.2 | ND | 1.1 | | 1.1 | ND | 1.08 | | 1.1 | ND | 1.16 | | 1.2 | ND | 1.1 | | 1.1 |
| Methyl parathion | 298-00-0 | 200 | ug/l | ND | 1.08 | | 1.1 | ND | 1.06 | | 1.1 | ND | 1.18 | | 1.2 | ND | 1.1 | | 1.1 | ND | 1.08 | | 1.1 | ND | 1.16 | | 1.2 | ND | 1.1 | | 1.1 |
| 3-Methylcholanthrene | 56-49-5 | NS | ug/l | ND | 1.08 | | 1.1 | ND | 1.06 | | 1.1 | ND | 1.18 | | 1.2 | ND | 1.1 | | 1.1 | ND | 1.08 | | 1.1 | ND | 1.16 | | 1.2 | ND | 1.1 | | 1.1 |
| 2-Methylnaphthalene | 91-57-6 | 2000 | ug/l | ND | 1.08 | | 0.22 | ND | 1.06 | | 0.21 | 0.023 | 1.18 | J | 0.24 | ND | 1.1 | | 0.22 | 0.018 | 1.08 | J B | 0.22 | 0.04 | 1.16 | J | 0.23 | ND | 1.1 | | 0.22 |
| 3-Methylphenol & 4-Methylphenol | 65794-96-9 | NS | ug/l | ND | 1.08 | | 1.1 | ND | 1.06 | | 1.1 | ND | 1.18 | | 1.2 | ND | 1.1 | | 1.1 | ND | 1.08 | | 1.1 | 0.038 | 1.16 | J | 1.2 | ND | 1.1 | | 1.1 |
| Naphthalene | 91-20-3 | 30000 | ug/l | ND | 1.08 | | 0.22 | ND | 1.06 | | 0.21 | ND | 1.18 | | 0.24 | ND | 1.1 | | 0.22 | 0.045 | 1.08 | J B | 0.22 | ND | 1.16 | | 0.23 | ND | 1.1 | | 0.22 |
| 1,4-Naphthoquinone | 130-15-4 | 5 | ug/l | ND | 1.08 | | 1.1 | ND | 1.06 | | 1.1 | ND | 1.18 | | 1.2 | 0.36 | 1.1 | J | 1.1 | ND | 1.08 | | 1.1 | ND | 1.16 | | 1.2 | ND | 1.1 | | 1.1 |
| 1-Naphthylamine | 134-32-7 | 1400 | ug/l | ND | 1.08 | | 1.1 | ND | 1.06 | | 1.1 | ND | 1.18 | | 1.2 | ND | 1.1 | | 1.1 | ND | 1.08 | | 1.1 | ND | 1.16 | | 1.2 | ND | 1.1 | | 1.1 |
| 2-Naphthylamine | 91-59-8 | 1400 | ug/l | ND | 1.08 | | 1.1 | ND | 1.06 | | 1.1 | ND | 1.18 | | 1.2 | ND | 1.1 | | 1.1 | ND | 1.08 | | 1.1 | ND | 1.16 | | 1.2 | ND | 1.1 | | 1.1 |
| 2-Nitroaniline | 88-74-4 | 5.8 | ug/l | ND | 1.08 | | 5.4 | ND | 1.06 | | 5.3 | ND | 1.18 | | ***5.9*** | ND | 1.1 | | 5.5 | ND | 1.08 | | 5.4 | ND | 1.16 | | 5.8 | ND | 1.1 | | 5.5 |
| 3-Nitroaniline | 99-09-2 | 5.8 | ug/l | ND | 1.08 | | 5.4 | ND | 1.06 | | 5.3 | ND | 1.18 | | ***5.9*** | ND | 1.1 | | 5.5 | ND | 1.08 | | 5.4 | ND | 1.16 | | 5.8 | ND | 1.1 | | 5.5 |
| 4-Nitroaniline | 100-01-6 | 5.8 | ug/l | ND | 1.08 | | 5.4 | ND | 1.06 | | 5.3 | ND | 1.18 | | ***5.9*** | ND | 1.1 | | 5.5 | ND | 1.08 | | 5.4 | ND | 1.16 | | 5.8 | ND | 1.1 | | 5.5 |
| Nitrobenzene | 98-95-3 | 51000 | ug/l | ND | 1.08 | | 0.22 | ND | 1.06 | | 0.21 | ND | 1.18 | | 0.24 | ND | 1.1 | | 0.22 | ND | 1.08 | | 0.22 | ND | 1.16 | | 0.23 | ND | 1.1 | | 0.22 |
| 5-Nitro-o-toluidine | 99-55-8 | NS | ug/l | ND | 1.08 | | 11 | ND | 1.06 | | 11 | ND | 1.18 | | 12 | ND | 1.1 | | 11 | ND | 1.08 | | 11 | ND | 1.16 | | 12 | ND | 1.1 | | 11 |
| 2-Nitrophenol | 88-75-5 | 820000 | ug/l | ND | 1.08 | | 1.1 | ND | 1.06 | | 1.1 | ND | 1.18 | | 1.2 | ND | 1.1 | | 1.1 | ND | 1.08 | | 1.1 | ND | 1.16 | | 1.2 | ND | 1.1 | | 1.1 |
| 4-Nitrophenol | 100-02-7 | 60000 | ug/l | ND | 1.08 | | 5.4 | ND | 1.06 | | 5.3 | ND | 1.18 | | 5.9 | ND | 1.1 | | 5.5 | ND | 1.08 | | 5.4 | ND | 1.16 | | 5.8 | ND | 1.1 | | 5.5 |
| 4-Nitroquinoline-1-oxide | 56-57-5 | 5 | ug/l | ND | 1.08 | | ***11*** | ND | 1.06 | | ***11*** | ND | 1.18 | | ***12*** | ND | 1.1 | | ***11*** | ND | 1.08 | | ***11*** | ND | 1.16 | | ***12*** | ND | 1.1 | | ***11*** |
| N-Nitrosodiethylamine | 55-18-5 | 0.043 | ug/l | ND | 1.08 | | ***1.1*** | ND | 1.06 | | ***1.1*** | ND | 1.18 | | ***1.2*** | ND | 1.1 | | ***1.1*** | ND | 1.08 | | ***1.1*** | ND | 1.16 | | ***1.2*** | ND | 1.1 | | ***1.1*** |
| N-Nitrosodimethylamine | 62-75-9 | 0.13 | ug/l | ND | 1.08 | | ***1.1*** | ND | 1.06 | | ***1.1*** | ND | 1.18 | | ***1.2*** | ND | 1.1 | | ***1.1*** | ND | 1.08 | | ***1.1*** | ND | 1.16 | | ***1.2*** | ND | 1.1 | | ***1.1*** |
| N-Nitroso-di-n-butylamine | 924-16-3 | 11 | ug/l | ND | 1.08 | | 1.1 | ND | 1.06 | | 1.1 | ND | 1.18 | | 1.2 | ND | 1.1 | | 1.1 | ND | 1.08 | | 1.1 | ND | 1.16 | | 1.2 | ND | 1.1 | | 1.1 |
| N-nitrosodi-n-propylamine | 621-64-7 | 370 | ug/l | ND | 1.08 | | 0.22 | ND | 1.06 | | 0.21 | ND | 1.18 | | 0.24 | ND | 1.1 | | 0.22 | ND | 1.08 | | 0.22 | ND | 1.16 | | 0.23 | ND | 1.1 | | 0.22 |
| N-nitrosodiphenylamine | 86-30-6 | 35000 | ug/l | ND | 1.08 | | 0.22 | ND | 1.06 | | 0.21 | ND | 1.18 | | 0.24 | ND | 1.1 | | 0.22 | ND | 1.08 | | 0.22 | ND | 1.16 | | 0.23 | ND | 1.1 | | 0.22 |
| N-Nitrosomethylethylamine | 10595-95-6 | NS | ug/l | ND | 1.08 | | 1.1 | ND | 1.06 | | 1.1 | ND | 1.18 | | 1.2 | ND | 1.1 | | 1.1 | ND | 1.08 | | 1.1 | ND | 1.16 | | 1.2 | ND | 1.1 | | 1.1 |
| N-Nitrosomorpholine | 59-89-2 | NS | ug/l | ND | 1.08 | | 1.1 | ND | 1.06 | | 1.1 | ND | 1.18 | | 1.2 | ND | 1.1 | | 1.1 | ND | 1.08 | | 1.1 | ND | 1.16 | | 1.2 | ND | 1.1 | | 1.1 |
| N-Nitrosopiperidine | 100-75-4 | NS | ug/l | ND | 1.08 | | 1.1 | ND | 1.06 | | 1.1 | ND | 1.18 | | 1.2 | ND | 1.1 | | 1.1 | ND | 1.08 | | 1.1 | ND | 1.16 | | 1.2 | ND | 1.1 | | 1.1 |
| N-Nitrosopyrrolidine | 930-55-2 | NS | ug/l | ND | 1.08 | | 1.1 | ND | 1.06 | | 1.1 | ND | 1.18 | | 1.2 | ND | 1.1 | | 1.1 | ND | 1.08 | | 1.1 | ND | 1.16 | | 1.2 | ND | 1.1 | | 1.1 |
| Di-n-octylphthalate | 117-84-0 | 3000 | ug/l | ND | 1.08 | | 1.1 | ND | 1.06 | | 1.1 | 0.94 | 1.18 | J | 1.2 | ND | 1.1 | | 1.1 | ND | 1.08 | | 1.1 | 1.1 | 1.16 | J | 1.2 | ND | 1.1 | | 1.1 |
| Parathion | 56-38-2 | 610 | ug/l | ND | 1.08 | | 1.1 | ND | 1.06 | | 1.1 | ND | 1.18 | | 1.2 | ND | 1.1 | | 1.1 | ND | 1.08 | | 1.1 | ND | 1.16 | | 1.2 | ND | 1.1 | | 1.1 |
| Pentachlorobenzene | 608-93-5 | 740 | ug/l | ND | 1.08 | | 1.1 | ND | 1.06 | | 1.1 | ND | 1.18 | | 1.2 | ND | 1.1 | | 1.1 | ND | 1.08 | | 1.1 | ND | 1.16 | | 1.2 | ND | 1.1 | | 1.1 |
| Pentachloroethane | 76-01-7 | 5 | ug/l | ND | 1.08 | | 2.2 | ND | 1.06 | | 2.1 | ND | 1.18 | | 2.4 | ND | 1.1 | | 2.2 | ND | 1.08 | | 2.2 | ND | 1.16 | | 2.3 | ND | 1.1 | | 2.2 |
| Pentachloronitrobenzene | 82-68-8 | 440 | ug/l | ND | 1.08 | | 1.1 | ND | 1.06 | | 1.1 | ND | 1.18 | | 1.2 | ND | 1.1 | | 1.1 | ND | 1.08 | | 1.1 | ND | 1.16 | | 1.2 | ND | 1.1 | | 1.1 |
| Pentachlorophenol | 87-86-5 | 1000 | ug/l | ND | 1.08 | | 1.1 | ND | 1.06 | | 1.1 | ND | 1.18 | | 1.2 | ND | 1.1 | | 1.1 | ND | 1.08 | | 1.1 | ND | 1.16 | | 1.2 | ND | 1.1 | | 1.1 |
| Phenacetin | 62-44-2 | 760000 | ug/l | ND | 1.08 | | 1.1 | ND | 1.06 | | 1.1 | ND | 1.18 | | 1.2 | ND | 1.1 | | 1.1 | ND | 1.08 | | 1.1 | ND | 1.16 | | 1.2 | ND | 1.1 | | 1.1 |
| Phenanthrene | 85-01-8 | 1100 | ug/l | 0.068 | 1.08 | J B | 0.22 | 0.14 | 1.06 | J B | 0.21 | 0.14 | 1.18 | J B | 0.24 | 0.096 | 1.1 | J B | 0.22 | 0.11 | 1.08 | J B | 0.22 | 0.12 | 1.16 | J B | 0.23 | 0.081 | 1.1 | J B | 0.22 |
| Phenol | 108-95-2 | 400000 | ug/l | ND | 1.08 | | 0.22 | ND | 1.06 | | 0.21 | ND | 1.18 | | 0.24 | ND | 1.1 | | 0.22 | ND | 1.08 | | 0.22 | ND | 1.16 | | 0.23 | ND | 1.1 | | 0.22 |
| p-Phenylene diamine | 106-50-3 | NS | ug/l | ND | 1.08 | | 43 | ND | 1.06 | | 42 | ND | 1.18 | | 47 | ND | 1.1 | | 44 | ND | 1.08 | | 43 | ND | 1.16 | | 46 | ND | 1.1 | | 44 |
| Phorate | 298-02-2 | 4.1 | ug/l | ND | 1.08 | | 1.1 | ND | 1.06 | | 1.1 | ND | 1.18 | | 1.2 | ND | 1.1 | | 1.1 | ND | 1.08 | | 1.1 | ND | 1.16 | | 1.2 | ND | 1.1 | | 1.1 |
| 2-Picoline | 109-06-8 | 5 | ug/l | ND | 1.08 | | 1.1 | ND | 1.06 | | 1.1 | ND | 1.18 | | 1.2 | ND | 1.1 | | 1.1 | ND | 1.08 | | 1.1 | ND | 1.16 | | 1.2 | ND | 1.1 | | 1.1 |
| Pronamide | 23950-58-5 | 50 | ug/l | ND | 1.08 | | 1.1 | ND | 1.06 | | 1.1 | ND | 1.18 | | 1.2 | ND | 1.1 | | 1.1 | ND | 1.08 | | 1.1 | ND | 1.16 | | 1.2 | ND | 1.1 | | 1.1 |
| Pyrene | 129-00-0 | 130 | ug/l | ND | 1.08 | | 0.22 | 0.045 | 1.06 | J | 0.21 | 0.066 | 1.18 | J | 0.24 | ND | 1.1 | | 0.22 | ND | 1.08 | | 0.22 | 0.026 | 1.16 | J | 0.23 | ND | 1.1 | | 0.22 |
| Pyridine | 110-86-1 | 200 | ug/l | ND | 1.08 | | 1.1 | ND | 1.06 | | 1.1 | ND | 1.18 | | 1.2 | ND | 1.1 | | 1.1 | ND | 1.08 | | 1.1 | ND | 1.16 | | 1.2 | ND | 1.1 | | 1.1 |
| Safrole | 94-59-7 | NS | ug/l | ND | 1.08 | | 1.1 | ND | 1.06 | | 1.1 | ND | 1.18 | | 1.2 | ND | 1.1 | | 1.1 | ND | 1.08 | | 1.1 | ND | 1.16 | | 1.2 | ND | 1.1 | | 1.1 |
| Sulfotepp | 3689-24-5 | 10 | ug/l | ND | 1.08 | | 1.1 | ND | 1.06 | | 1.1 | ND | 1.18 | | 1.2 | ND | 1.1 | | 1.1 | ND | 1.08 | | 1.1 | ND | 1.16 | | 1.2 | ND | 1.1 | | 1.1 |
| 1,2,4,5-Tetrachlorobenzene | 95-94-3 | 580 | ug/l | ND | 1.08 | | 1.1 | ND | 1.06 | | 1.1 | ND | 1.18 | | 1.2 | ND | 1.1 | | 1.1 | ND | 1.08 | | 1.1 | ND | 1.16 | | 1.2 | ND | 1.1 | | 1.1 |
| 2,3,4,6-Tetrachlorophenol | 58-90-2 | 61000 | ug/l | ND | 1.08 | | 1.1 | ND | 1.06 | | 1.1 | ND | 1.18 | | 1.2 | ND | 1.1 | | 1.1 | ND | 1.08 | | 1.1 | ND | 1.16 | | 1.2 | ND | 1.1 | | 1.1 |
| Thionazin | 297-97-2 | 5 | ug/l | ND | 1.08 | | 1.1 | ND | 1.06 | | 1.1 | ND | 1.18 | | 1.2 | ND | 1.1 | | 1.1 | ND | 1.08 | | 1.1 | ND | 1.16 | | 1.2 | ND | 1.1 | | 1.1 |
| o-Toluidine | 95-53-4 | 11000 | ug/l | ND | 1.08 | | 1.1 | ND | 1.06 | | 1.1 | ND | 1.18 | | 1.2 | ND | 1.1 | | 1.1 | ND | 1.08 | | 1.1 | ND | 1.16 | | 1.2 | ND | 1.1 | | 1.1 |
| 1,2,4-Trichlorobenzene | 120-82-1 | 44000 | ug/l | ND | 1.08 | | 0.22 | ND | 1.06 | | 0.21 | ND | 1.18 | | 0.24 | ND | 1.1 | | 0.22 | ND | 1.08 | | 0.22 | ND | 1.16 | | 0.23 | ND | 1.1 | | 0.22 |
| 2,4,5-Trichlorophenol | 95-95-4 | 1000000 | ug/l | ND | 1.08 | | 1.1 | ND | 1.06 | | 1.1 | ND | 1.18 | | 1.2 | ND | 1.1 | | 1.1 | ND | 1.08 | | 1.1 | ND | 1.16 | | 1.2 | ND | 1.1 | | 1.1 |
| 2,4,6-Trichlorophenol | 88-06-2 | 31000 | ug/l | ND | 1.08 | | 1.1 | ND | 1.06 | | 1.1 | ND | 1.18 | | 1.2 | ND | 1.1 | | 1.1 | ND | 1.08 | | 1.1 | ND | 1.16 | | 1.2 | ND | 1.1 | | 1.1 |
| O,O,O-Triethyl phosphorothioate | 126-68-1 | 5 | ug/l | ND | 1.08 | | 1.1 | ND | 1.06 | | 1.1 | ND | 1.18 | | 1.2 | ND | 1.1 | | 1.1 | ND | 1.08 | | 1.1 | ND | 1.16 | | 1.2 | ND | 1.1 | | 1.1 |
| 1,3,5-Trinitrobenzene | 99-35-4 | NS | ug/l | ND | 1.08 | | 1.1 | ND | 1.06 | | 1.1 | ND | 1.18 | | 1.2 | ND | 1.1 | | 1.1 | ND | 1.08 | | 1.1 | ND | 1.16 | | 1.2 | ND | 1.1 | | 1.1 |

**Table 6**
**Summary of Groundwater Analytical Results - June 2009**
**Comparison to Pennsylvania Non-Residential Non-Use Aquifer Groundwater MSCs**
**U.S. Steel - RCRA Groundwater Sampling**
**Fairless Hills, Pennsylvania**

| | CAS No | PADEP Non-Residential Non-Use Aquifer GW MSC | Location ID<br>Sample ID<br>Sample Date<br>Lab Id | FB-01<br>FB-01_061709<br>6/17/2009<br>C9F180195005 | | | | FB-02<br>FB-02_061809<br>6/18/2009<br>C9F190331011 | | | | FB-03<br>FB-03_061909<br>6/19/2009<br>C9F200181014 | | | | TB-01<br>TB-01_061709<br>C9F180195006<br>39981 | | | | TB-02<br>TB-02_061809<br>C9F190331015<br>39982 | | | | TB-03<br>TB-03_061909<br>C9F200181015<br>39983 | | | |
|---|---|---|---|---|---|---|---|---|---|---|---|---|---|---|---|---|---|---|---|---|---|---|---|---|---|---|---|
| ***RCRA APPENDIX IX SEMI-VOLATILE ORGANIC COMPOUNDS (Method 8270)*** | | | | Result | DF | Q | RL | Result | DF | Q | RL | Result | DF | Q | RL | Result | DF | Q | RL | Result | DF | Q | RL | Result | DF | Q | RL |
| Hexachloroethane | 67-72-1 | 100 | ug/l | ND | 1.1 | | 1.2 | ND | 1.04 | | 1 | ND | 1.05 | | 1 | - | - | - | - | - | - | - | - | - | - | - | - |
| Hexachloropropene | 1888-71-7 | 5 | ug/l | ND | 1.1 | | 0.23 | ND | 1.04 | | 1 | ND | 1.05 | | 1 | - | - | - | - | - | - | - | - | - | - | - | - |
| Indeno(1,2,3-cd)pyrene | 193-39-5 | 62 | ug/l | ND | 1.1 | | 1.2 | ND | 1.04 | | 0.21 | ND | 1.05 | | 0.21 | - | - | - | - | - | - | - | - | - | - | - | - |
| Isodrin | 465-73-6 | 5 | ug/l | ND | 1.1 | | 1.2 | ND | 1.04 | | 1 | ND | 1.05 | | 1 | - | - | - | - | - | - | - | - | - | - | - | - |
| Isophorone | 78-59-1 | 100000 | ug/l | ND | 1.1 | | 0.23 | ND | 1.04 | | 1 | ND | 1.05 | | 1 | - | - | - | - | - | - | - | - | - | - | - | - |
| Isosafrole | 120-58-1 | 5 | ug/l | ND | 1.1 | | 1.2 | ND | 1.04 | | 1 | ND | 1.05 | | 1 | - | - | - | - | - | - | - | - | - | - | - | - |
| Kepone | 143-50-0 | 160 | ug/l | ND | 1.1 | | 1.2 | ND | 1.04 | | 4.2 | ND | 1.05 | | 4.2 | - | - | - | - | - | - | - | - | - | - | - | - |
| Methapyrilene | 91-80-5 | NS | ug/l | ND | 1.1 | | 1.2 | ND | 1.04 | | 1 | ND | 1.05 | | 1 | - | - | - | - | - | - | - | - | - | - | - | - |
| Methyl methanesulfonate | 66-27-3 | 26 | ug/l | ND | 1.1 | | 1.2 | ND | 1.04 | | 1 | ND | 1.05 | | 1 | - | - | - | - | - | - | - | - | - | - | - | - |
| Methyl parathion | 298-00-0 | 200 | ug/l | ND | 1.1 | | 1.2 | ND | 1.04 | | 1 | ND | 1.05 | | 1 | - | - | - | - | - | - | - | - | - | - | - | - |
| 3-Methylcholanthrene | 56-49-5 | NS | ug/l | ND | 1.1 | | 1.2 | ND | 1.04 | | 1 | ND | 1.05 | | 1 | - | - | - | - | - | - | - | - | - | - | - | - |
| 2-Methylnaphthalene | 91-57-6 | 2000 | ug/l | 0.019 | 1.1 | J | 1.2 | 0.042 | 1.04 | J | 0.21 | 0.026 | 1.05 | J B | 0.21 | - | - | - | - | - | - | - | - | - | - | - | - |
| 3-Methylphenol & 4-Methylphenol | 65794-96-9 | NS | ug/l | ND | 1.1 | | 1.2 | 0.094 | 1.04 | J | 1 | ND | 1.05 | | 1 | - | - | - | - | - | - | - | - | - | - | - | - |
| Naphthalene | 91-20-3 | 30000 | ug/l | ND | 1.1 | | 1.2 | 0.046 | 1.04 | J | 0.21 | 0.058 | 1.05 | J B | 0.21 | - | - | - | - | - | - | - | - | - | - | - | - |
| 1,4-Naphthoquinone | 130-15-4 | 5 | ug/l | ND | 1.1 | | ***12*** | ND | 1.04 | | 1 | ND | 1.05 | | 1 | - | - | - | - | - | - | - | - | - | - | - | - |
| 1-Naphthylamine | 134-32-7 | 1400 | ug/l | ND | 1.1 | | 0.23 | ND | 1.04 | | 1 | ND | 1.05 | | 1 | - | - | - | - | - | - | - | - | - | - | - | - |
| 2-Naphthylamine | 91-59-8 | 1400 | ug/l | ND | 1.1 | | 0.23 | ND | 1.04 | | 1 | ND | 1.05 | | 1 | - | - | - | - | - | - | - | - | - | - | - | - |
| 2-Nitroaniline | 88-74-4 | 5.8 | ug/l | ND | 1.1 | | 0.23 | ND | 1.04 | | 5.2 | ND | 1.05 | | 5.2 | - | - | - | - | - | - | - | - | - | - | - | - |
| 3-Nitroaniline | 99-09-2 | 5.8 | ug/l | ND | 1.1 | | 0.23 | ND | 1.04 | | 5.2 | ND | 1.05 | | 5.2 | - | - | - | - | - | - | - | - | - | - | - | - |
| 4-Nitroaniline | 100-01-6 | 5.8 | ug/l | ND | 1.1 | | 1.2 | ND | 1.04 | | 5.2 | ND | 1.05 | | 5.2 | - | - | - | - | - | - | - | - | - | - | - | - |
| Nitrobenzene | 98-95-3 | 51000 | ug/l | ND | 1.1 | | 1.2 | ND | 1.04 | | 0.21 | ND | 1.05 | | 0.21 | - | - | - | - | - | - | - | - | - | - | - | - |
| 5-Nitro-o-toluidine | 99-55-8 | NS | ug/l | ND | 1.1 | | 0 | ND | 1.04 | | 10 | ND | 1.05 | | 10 | - | - | - | - | - | - | - | - | - | - | - | - |
| 2-Nitrophenol | 88-75-5 | 820000 | ug/l | ND | 1.1 | | 1.2 | ND | 1.04 | | 1 | ND | 1.05 | | 1 | - | - | - | - | - | - | - | - | - | - | - | - |
| 4-Nitrophenol | 100-02-7 | 60000 | ug/l | ND | 1.1 | | 0.23 | ND | 1.04 | | 5.2 | ND | 1.05 | | 5.2 | - | - | - | - | - | - | - | - | - | - | - | - |
| 4-Nitroquinoline-1-oxide | 56-57-5 | 5 | ug/l | ND | 1.1 | | 1.2 | ND | 1.04 | | ***10*** | ND | 1.05 | | ***10*** | - | - | - | - | - | - | - | - | - | - | - | - |
| N-Nitrosodiethylamine | 55-18-5 | 0.043 | ug/l | ND | 1.1 | | ***1.2*** | ND | 1.04 | | ***1*** | ND | 1.05 | | ***1*** | - | - | - | - | - | - | - | - | - | - | - | - |
| N-Nitrosodimethylamine | 62-75-9 | 0.13 | ug/l | ND | 1.1 | | ***0.23*** | ND | 1.04 | | ***1*** | ND | 1.05 | | ***1*** | - | - | - | - | - | - | - | - | - | - | - | - |
| N-Nitroso-di-n-butylamine | 924-16-3 | 11 | ug/l | ND | 1.1 | | 1.2 | ND | 1.04 | | 1 | ND | 1.05 | | 1 | - | - | - | - | - | - | - | - | - | - | - | - |
| N-nitrosodi-n-propylamine | 621-64-7 | 370 | ug/l | ND | 1.1 | | 1.2 | ND | 1.04 | | 0.21 | ND | 1.05 | | 0.21 | - | - | - | - | - | - | - | - | - | - | - | - |
| N-nitrosodiphenylamine | 86-30-6 | 35000 | ug/l | ND | 1.1 | | 1.2 | ND | 1.04 | | 0.21 | ND | 1.05 | | 0.21 | - | - | - | - | - | - | - | - | - | - | - | - |
| N-Nitrosomethylethylamine | 10595-95-6 | NS | ug/l | ND | 1.1 | | 1.2 | ND | 1.04 | | 1 | ND | 1.05 | | 1 | - | - | - | - | - | - | - | - | - | - | - | - |
| N-Nitrosomorpholine | 59-89-2 | NS | ug/l | ND | 1.1 | | 1.2 | ND | 1.04 | | 1 | ND | 1.05 | | 1 | - | - | - | - | - | - | - | - | - | - | - | - |
| N-Nitrosopiperidine | 100-75-4 | NS | ug/l | ND | 1.1 | | 0.23 | ND | 1.04 | | 1 | ND | 1.05 | | 1 | - | - | - | - | - | - | - | - | - | - | - | - |
| N-Nitrosopyrrolidine | 930-55-2 | NS | ug/l | ND | 1.1 | | 0.23 | ND | 1.04 | | 1 | ND | 1.05 | | 1 | - | - | - | - | - | - | - | - | - | - | - | - |
| Di-n-octylphthalate | 117-84-0 | 3000 | ug/l | ND | 1.1 | | 1.2 | ND | 1.04 | | 1 | ND | 1.05 | | 1 | - | - | - | - | - | - | - | - | - | - | - | - |
| Parathion | 56-38-2 | 610 | ug/l | ND | 1.1 | | 1.2 | ND | 1.04 | | 1 | ND | 1.05 | | 1 | - | - | - | - | - | - | - | - | - | - | - | - |
| Pentachlorobenzene | 608-93-5 | 740 | ug/l | ND | 1.1 | | 0.23 | ND | 1.04 | | 1 | ND | 1.05 | | 1 | - | - | - | - | - | - | - | - | - | - | - | - |
| Pentachloroethane | 76-01-7 | 5 | ug/l | ND | 1.1 | | 0.23 | ND | 1.04 | | 2.1 | ND | 1.05 | | 2.1 | - | - | - | - | - | - | - | - | - | - | - | - |
| Pentachloronitrobenzene | 82-68-8 | 440 | ug/l | ND | 1.1 | | 1.2 | ND | 1.04 | | 1 | ND | 1.05 | | 1 | - | - | - | - | - | - | - | - | - | - | - | - |
| Pentachlorophenol | 87-86-5 | 1000 | ug/l | ND | 1.1 | | 1.2 | ND | 1.04 | | 1 | ND | 1.05 | | 1 | - | - | - | - | - | - | - | - | - | - | - | - |
| Phenacetin | 62-44-2 | 760000 | ug/l | ND | 1.1 | | 1.2 | ND | 1.04 | | 1 | ND | 1.05 | | 1 | - | - | - | - | - | - | - | - | - | - | - | - |
| Phenanthrene | 85-01-8 | 1100 | ug/l | 0.17 | 1.1 | J B | 1.2 | 0.098 | 1.04 | J B | 0.21 | 0.16 | 1.05 | J B | 0.21 | - | - | - | - | - | - | - | - | - | - | - | - |
| Phenol | 108-95-2 | 400000 | ug/l | ND | 1.1 | | 1.2 | ND | 1.04 | | 0.21 | ND | 1.05 | | 0.21 | - | - | - | - | - | - | - | - | - | - | - | - |
| p-Phenylene diamine | 106-50-3 | NS | ug/l | ND | 1.1 | | 1.2 | ND | 1.04 | | 42 | ND | 1.05 | | 42 | - | - | - | - | - | - | - | - | - | - | - | - |
| Phorate | 298-02-2 | 4.1 | ug/l | ND | 1.1 | | 1.2 | ND | 1.04 | | 1 | ND | 1.05 | | 1 | - | - | - | - | - | - | - | - | - | - | - | - |
| 2-Picoline | 109-06-8 | 5 | ug/l | ND | 1.1 | | 1.2 | ND | 1.04 | | 1 | ND | 1.05 | | 1 | - | - | - | - | - | - | - | - | - | - | - | - |
| Pronamide | 23950-58-5 | 50 | ug/l | ND | 1.1 | | 1.2 | ND | 1.04 | | 1 | ND | 1.05 | | 1 | - | - | - | - | - | - | - | - | - | - | - | - |
| Pyrene | 129-00-0 | 130 | ug/l | ND | 1.1 | | 1.2 | ND | 1.04 | | 0.21 | ND | 1.05 | | 0.21 | - | - | - | - | - | - | - | - | - | - | - | - |
| Pyridine | 110-86-1 | 200 | ug/l | ND | 1.1 | | 1.2 | ND | 1.04 | | 1 | ND | 1.05 | | 1 | - | - | - | - | - | - | - | - | - | - | - | - |
| Safrole | 94-59-7 | NS | ug/l | ND | 1.1 | | 1.2 | ND | 1.04 | | 1 | ND | 1.05 | | 1 | - | - | - | - | - | - | - | - | - | - | - | - |
| Sulfotepp | 3689-24-5 | 10 | ug/l | ND | 1.1 | | 0.23 | ND | 1.04 | | 1 | ND | 1.05 | | 1 | - | - | - | - | - | - | - | - | - | - | - | - |
| 1,2,4,5-Tetrachlorobenzene | 95-94-3 | 580 | ug/l | ND | 1.1 | | 0.23 | ND | 1.04 | | 1 | ND | 1.05 | | 1 | - | - | - | - | - | - | - | - | - | - | - | - |
| 2,3,4,6-Tetrachlorophenol | 58-90-2 | 61000 | ug/l | ND | 1.1 | | 1.2 | ND | 1.04 | | 1 | ND | 1.05 | | 1 | - | - | - | - | - | - | - | - | - | - | - | - |
| Thionazin | 297-97-2 | 5 | ug/l | ND | 1.1 | | ***5.8*** | ND | 1.04 | | 1 | ND | 1.05 | | 1 | - | - | - | - | - | - | - | - | - | - | - | - |
| o-Toluidine | 95-53-4 | 11000 | ug/l | ND | 1.1 | | 46 | ND | 1.04 | | 1 | ND | 1.05 | | 1 | - | - | - | - | - | - | - | - | - | - | - | - |
| 1,2,4-Trichlorobenzene | 120-82-1 | 44000 | ug/l | ND | 1.1 | | 1.2 | ND | 1.04 | | 0.21 | ND | 1.05 | | 0.21 | - | - | - | - | - | - | - | - | - | - | - | - |
| 2,4,5-Trichlorophenol | 95-95-4 | 1000000 | ug/l | ND | 1.1 | | 0.23 | ND | 1.04 | | 1 | ND | 1.05 | | 1 | - | - | - | - | - | - | - | - | - | - | - | - |
| 2,4,6-Trichlorophenol | 88-06-2 | 31000 | ug/l | ND | 1.1 | | 1.2 | ND | 1.04 | | 1 | ND | 1.05 | | 1 | - | - | - | - | - | - | - | - | - | - | - | - |
| O,O,O-Triethyl phosphorothioate | 126-68-1 | 5 | ug/l | ND | 1.1 | | 1.2 | ND | 1.04 | | 1 | ND | 1.05 | | 1 | - | - | - | - | - | - | - | - | - | - | - | - |
| 1,3,5-Trinitrobenzene | 99-35-4 | NS | ug/l | ND | 1.1 | | 1.2 | ND | 1.04 | | 1 | ND | 1.05 | | 1 | - | - | - | - | - | - | - | - | - | - | - | - |

**Table 6**
**Summary of Groundwater Analytical Results - June 2009**
**Comparison to Pennsylvania Non-Residential Non-Use Aquifer Groundwater MSCs**
**U.S. Steel - RCRA Groundwater Sampling**
**Fairless Hills, Pennsylvania**

| | CAS No | PADEP Non-Residential Non-Use Aquifer GW MSC | Location ID<br>Sample ID<br>Sample Date<br>Lab Id | MW1-02-31<br>MW1-02-31_061809<br>6/18/2009<br>C9F190331006 | | | | MW1-12-29<br>MW1-12-29_061809<br>6/18/2009<br>C9F190331004 | | | | MW1-15-29<br>MW1-15-29_061909<br>6/19/2009<br>C9F200181009 | | | | MW1-23-47<br>MW1-23-47_061909<br>6/19/2009<br>C9F200181001 | | | | MW1-26-27<br>MW1-26-27_061709<br>6/17/2009<br>C9F180195003 | | | | MW1-28-74<br>MW1-28-74_061809<br>6/18/2009<br>C9F190331012 | | | | MW2-01-22<br>MW2-01-22_061809<br>6/18/2009<br>C9F190331013 | | | |
|---|---|---|---|---|---|---|---|---|---|---|---|---|---|---|---|---|---|---|---|---|---|---|---|---|---|---|---|---|---|---|---|
| ***RCRA APPENDIX IX METALS - Dissolved (Method 6010/7471)*** | | | | Result | DF | Q | RL | Result | DF | Q | RL | Result | DF | Q | RL | Result | DF | Q | RL | Result | DF | Q | RL | Result | DF | Q | RL | Result | DF | Q | RL |
| Antimony | 7440-36-0 | 6000 | ug/l | 0.43 | 1 | B | 2 | 0.055 | 1 | B | 2 | 0.41 | 1 | B | 2 | 0.043 | 1 | B | 2 | 0.081 | 1 | B J | 2 | 0.047 | 1 | B | 2 | 0.12 | 1 | B | 2 |
| Arsenic | 7440-38-2 | 50000 | ug/l | ND | 1 | | 1 | 0.47 | 1 | B | 1 | 41.6 | 1 | | 1 | ND | 1 | | 1 | 1.2 | 1 | | 1 | 0.8 | 1 | B | 1 | 0.69 | 1 | B | 1 |
| Barium | 7440-39-3 | 2000000 | ug/l | 33.9 | 1 | | 10 | 30.6 | 1 | | 10 | 144 | 1 | | 10 | 39.8 | 1 | | 10 | 10.8 | 1 | | 10 | 4.3 | 1 | B | 10 | 30 | 1 | | 10 |
| Beryllium | 7440-41-7 | 4000 | ug/l | ND | 1 | | 1 | ND | 1 | | 1 | ND | 1 | | 1 | ND | 1 | | 1 | ND | 1 | | 1 | ND | 1 | | 1 | ND | 1 | | 1 |
| Cadmium | 7440-43-9 | 5000 | ug/l | ND | 1 | | 1 | ND | 1 | | 1 | ND | 1 | | 1 | ND | 1 | | 1 | ND | 1 | | 1 | 0.31 | 1 | B | 1 | ND | 1 | | 1 |
| Chromium | 7440-47-3 | 100000 | ug/l | 2.2 | 1 | | 2 | 2.9 | 1 | | 2 | 2.8 | 1 | | 2 | 2.8 | 1 | | 2 | 6.4 | 1 | | 2 | 3.4 | 1 | | 2 | 5.5 | 1 | | 2 |
| Cobalt | 7440-48-4 | 2000000 | ug/l | 0.58 | 1 | | 0.5 | 0.62 | 1 | | 0.5 | 0.65 | 1 | | 0.5 | 0.83 | 1 | | 0.5 | 0.22 | 1 | B | 0.5 | 4.7 | 1 | | 0.5 | 0.11 | 1 | B | 0.5 |
| Copper | 7440-50-8 | 1000000 | ug/l | 1.6 | 1 | B J | 2 | 1.3 | 1 | B J | 2 | 2.4 | 1 | J | 2 | 2.7 | 1 | J | 2 | 1.2 | 1 | B | 2 | 1.9 | 1 | B J | 2 | 1.4 | 1 | B J | 2 |
| Lead | 7439-92-1 | 5000 | ug/l | 0.16 | 1 | B J | 1 | 0.039 | 1 | B J | 1 | 0.22 | 1 | B | 1 | 0.27 | 1 | B | 1 | 0.047 | 1 | B | 1 | 0.058 | 1 | B J | 1 | 0.067 | 1 | B J | 1 |
| Mercury | 7439-97-6 | 2000 | ug/l | ND | 1 | | 0.2 | ND | 1 | | 0.2 | ND | 1 | | 0.2 | ND | 1 | | 0.2 | ND | 1 | | 0.2 | ND | 1 | | 0.2 | ND | 1 | | 0.2 |
| Nickel | 7440-02-0 | 100000 | ug/l | 0.84 | 1 | B | 1 | 0.86 | 1 | B | 1 | 0.42 | 1 | B | 1 | 0.3 | 1 | B | 1 | 1.4 | 1 | | 1 | 13.1 | 1 | | 1 | 0.3 | 1 | B | 1 |
| Selenium | 7782-49-2 | 50000 | ug/l | ND | 1 | | 5 | 0.55 | 1 | B | 5 | ND | 1 | | 5 | ND | 1 | | 5 | 0.76 | 1 | B | 5 | ND | 1 | | 5 | 10.3 | 1 | | 5 |
| Silver | 7440-22-4 | 100000 | ug/l | ND | 1 | | 1 | ND | 1 | | 1 | ND | 1 | | 1 | ND | 1 | | 1 | ND | 1 | | 1 | ND | 1 | | 1 | ND | 1 | | 1 |
| Thallium | 7440-28-0 | 2000 | ug/l | 0.18 | 1 | B J | 1 | 0.089 | 1 | B J | 1 | ND | 1 | | 1 | 0.49 | 1 | B J | 1 | 0.075 | 1 | B J | 1 | ND | 1 | | 1 | ND | 1 | | 1 |
| Tin | 7440-31-5 | 61000000 | ug/l | ND | 1 | | 5 | ND | 1 | | 5 | ND | 1 | | 5 | 2.8 | 1 | B | 5 | 6.6 | 1 | | 5 | ND | 1 | | 5 | ND | 1 | | 5 |
| Vanadium | 7440-62-2 | 720000 | ug/l | ND | 1 | | 1 | ND | 1 | | 1 | 0.1 | 1 | B J | 1 | 0.33 | 1 | B J | 1 | 0.32 | 1 | B J | 1 | ND | 1 | | 1 | 0.14 | 1 | B J | 1 |
| Zinc | 7440-66-6 | 2000000 | ug/l | 12.5 | 1 | J | 5 | 15.8 | 1 | J | 5 | 7.3 | 1 | J | 5 | 8.5 | 1 | J | 5 | 5.6 | 1 | | 5 | 8.6 | 1 | J | 5 | 5.7 | 1 | J | 5 |

**Table 6**
**Summary of Groundwater Analytical Results - June 2009**
**Comparison to Pennsylvania Non-Residential Non-Use Aquifer Groundwater MSCs**
**U.S. Steel - RCRA Groundwater Sampling**
**Fairless Hills, Pennsylvania**

| | CAS No | PADEP Non-Residential Non-Use Aquifer GW MSC | Location ID | MW2-03-33 | | | | MW3-02-27 | | | | MW3-02-27 | | | | MW3-12-31 | | | | MW3-29-29 | | | | MW4-02-24 | | | | MW4-10-23 | | | | MW4-11-33 | | | |
|---|---|---|---|---|---|---|---|---|---|---|---|---|---|---|---|---|---|---|---|---|---|---|---|---|---|---|---|---|---|---|---|---|---|---|---|
| | | | Sample ID | MW2-03-33_061909 | | | | MW3-02-27_061809 | | | | DUP-01_061809 | | | | MW3-12-31_061909 | | | | MW3-29-29_061809 | | | | MW4-02-24_061809 | | | | MW4-10-23_061709 | | | | MW4-11-33_061909 | | | |
| | | | Sample Date | 6/19/2009 | | | | 6/18/2009 | | | | 6/18/2009 | | | | 6/19/2009 | | | | 6/18/2009 | | | | 6/18/2009 | | | | 6/17/2009 | | | | 6/19/2009 | | | |
| | | | Lab Id | C9F200181010 | | | | C9F190331001 | | | | C9F190331002 | | | | C9F200181002 | | | | C9F190331003 | | | | C9F190331014 | | | | C9F180195004 | | | | C9F200181003 | | | |
| ***RCRA APPENDIX IX METALS - Dissolved (Method 6010/7471)*** | | | | Result | DF | Q | RL | Result | DF | Q | RL | Result | DF | Q | RL | Result | DF | Q | RL | Result | DF | Q | RL | Result | DF | Q | RL | Result | DF | Q | RL | Result | DF | Q | RL |
| Antimony | 7440-36-0 | 6000 | ug/l | ND | 1 | | 2 | 0.15 | 1 | B | 2 | 0.088 | 1 | B | 2 | 0.12 | 1 | B | 2 | 0.056 | 1 | B | 2 | 0.039 | 1 | B | 2 | 0.06 | 1 | B J | 2 | 0.056 | 1 | B | 2 |
| Arsenic | 7440-38-2 | 50000 | ug/l | ND | 1 | | 1 | 11.2 | 1 | | 1 | 10.8 | 1 | | 1 | ND | 1 | | 1 | 1.4 | 1 | | 1 | 23.3 | 1 | | 1 | 2.4 | 1 | | 1 | ND | 1 | | 1 |
| Barium | 7440-39-3 | 2000000 | ug/l | 14.6 | 1 | | 10 | 130 | 1 | | 10 | 127 | 1 | | 10 | 19.6 | 1 | | 10 | 58.4 | 1 | | 10 | 328 | 1 | | 10 | 128 | 1 | | 10 | 43.7 | 1 | | 10 |
| Beryllium | 7440-41-7 | 4000 | ug/l | ND | 1 | | 1 | ND | 1 | | 1 | ND | 1 | | 1 | ND | 1 | | 1 | ND | 1 | | 1 | ND | 1 | | 1 | ND | 1 | | 1 | 60 | 1 | | 1 |
| Cadmium | 7440-43-9 | 5000 | ug/l | 0.38 | 1 | B | 1 | ND | 1 | | 1 | ND | 1 | | 1 | ND | 1 | | 1 | ND | 1 | | 1 | 0.12 | 1 | B | 1 | ND | 1 | | 1 | 10 | 1 | | 1 |
| Chromium | 7440-47-3 | 100000 | ug/l | 3.5 | 1 | | 2 | 3 | 1 | | 2 | 3.1 | 1 | | 2 | 2.4 | 1 | | 2 | 2.8 | 1 | | 2 | 2.3 | 1 | | 2 | 6.9 | 1 | | 2 | 10.9 | 1 | | 2 |
| Cobalt | 7440-48-4 | 2000000 | ug/l | 0.49 | 1 | B | 0.5 | 0.45 | 1 | B | 0.5 | 0.48 | 1 | B | 0.5 | 0.093 | 1 | B | 0.5 | 0.5 | 1 | | 0.5 | 0.5 | 1 | | 0.5 | 0.79 | 1 | | 0.5 | 329 | 1 | | 0.5 |
| Copper | 7440-50-8 | 1000000 | ug/l | 1.5 | 1 | B J | 2 | 1.2 | 1 | B J | 2 | 1.2 | 1 | B J | 2 | 1.2 | 1 | B J | 2 | 1.8 | 1 | B J | 2 | 1.2 | 1 | B J | 2 | 1.4 | 1 | B | 2 | 178 | 1 | J | 2 |
| Lead | 7439-92-1 | 5000 | ug/l | 0.099 | 1 | B | 1 | 0.12 | 1 | B J | 1 | 0.12 | 1 | B J | 1 | 0.087 | 1 | B | 1 | 0.12 | 1 | B J | 1 | 0.099 | 1 | B J | 1 | 0.61 | 1 | B | 1 | 3.3 | 1 | | 1 |
| Mercury | 7439-97-6 | 2000 | ug/l | ND | 1 | | 0.2 | 0.2 | 1 | | 0.2 | ND | 1 | | 0.2 | ND | 1 | | 0.2 | ND | 1 | | 0.2 | ND | 1 | | 0.2 | ND | 1 | | 0.2 | ND | 1 | | 0.2 |
| Nickel | 7440-02-0 | 100000 | ug/l | 1.5 | 1 | | 1 | 0.89 | 1 | B | 1 | 0.93 | 1 | B | 1 | 3.6 | 1 | | 1 | 0.4 | 1 | B | 1 | 0.25 | 1 | B | 1 | 2.5 | 1 | | 1 | 402 | 1 | | 1 |
| Selenium | 7782-49-2 | 50000 | ug/l | ND | 1 | | 5 | ND | 1 | | 5 | ND | 1 | | 5 | ND | 1 | | 5 | ND | 1 | | 5 | 0.42 | 1 | B | 5 | ND | 1 | | 5 | 10.7 | 1 | | 5 |
| Silver | 7440-22-4 | 100000 | ug/l | ND | 1 | | 1 | ND | 1 | | 1 | ND | 1 | | 1 | ND | 1 | | 1 | ND | 1 | | 1 | ND | 1 | | 1 | 0.3 | 1 | B | 1 | ND | 1 | | 1 |
| Thallium | 7440-28-0 | 2000 | ug/l | 0.025 | 1 | B J | 1 | 0.095 | 1 | B J | 1 | 0.17 | 1 | B J | 1 | 0.14 | 1 | B J | 1 | 0.061 | 1 | B J | 1 | ND | 1 | | 1 | 0.056 | 1 | B J | 1 | 1.1 | 1 | J | 1 |
| Tin | 7440-31-5 | 61000000 | ug/l | ND | 1 | | 5 | 1.6 | 1 | B | 5 | 2.7 | 1 | B | 5 | 4.8 | 1 | B | 5 | ND | 1 | | 5 | ND | 1 | | 5 | 6 | 1 | | 5 | 4.2 | 1 | B | 5 |
| Vanadium | 7440-62-2 | 720000 | ug/l | 0.39 | 1 | B J | 1 | 1.4 | 1 | J | 1 | ND | 1 | | 1 | 1.4 | 1 | J | 1 | ND | 1 | | 1 | 1.1 | 1 | J | 1 | ND | 1 | | 1 | 14.9 | 1 | J | 1 |
| Zinc | 7440-66-6 | 2000000 | ug/l | 13.1 | 1 | J | 5 | 5.5 | 1 | J | 5 | 5.3 | 1 | J | 5 | 8.5 | 1 | J | 5 | 19.7 | 1 | J | 5 | 4.2 | 1 | B J | 5 | 69.6 | 1 | | 5 | 1370 | 1 | J | 5 |

**Table 6**
**Summary of Groundwater Analytical Results - June 2009**
**Comparison to Pennsylvania Non-Residential Non-Use Aquifer Groundwater MSCs**
**U.S. Steel - RCRA Groundwater Sampling**
**Fairless Hills, Pennsylvania**

| | CAS No | PADEP Non-Residential Non-Use Aquifer GW MSC | Location ID<br>Sample ID<br>Sample Date<br>Lab Id | MW4-14-36<br>MW4-14-36_061909<br>6/19/2009<br>C9F200181006 | | | | MW4-30-63<br>MW4-30-63_061909<br>6/19/2009<br>C9F200181012 | | | | MW4-30-63<br>DUP-02_061909<br>6/19/2009<br>C9F200181013 | | | | MW4-33-25<br>MW4-33-25_061909<br>6/19/2009<br>C9F200181011 | | | | MW5-07-24<br>MW5-07-24_061809<br>6/18/2009<br>C9F190331005 | | | | MW5-18-26<br>MW5-18-26_061709<br>6/17/2009<br>C9F180195002 | | | | MW5-41-19<br>MW5-41-19_061709<br>6/17/2009<br>C9F180195001 | | | | MW6-02-27<br>MW6-02-27_061909<br>6/19/2009<br>C9F200181004 | | | |
|---|---|---|---|---|---|---|---|---|---|---|---|---|---|---|---|---|---|---|---|---|---|---|---|---|---|---|---|---|---|---|---|---|---|---|---|
| ***RCRA APPENDIX IX METALS - Dissolved (Method 6010/7471)*** | | | | Result | DF | Q | RL | Result | DF | Q | RL | Result | DF | Q | RL | Result | DF | Q | RL | ResNDlt | DF | Q | RL | Result | DF | Q | RL | Result | DF | Q | RL | Result | DF | Q | RL |
| Antimony | 7440-36-0 | 6000 | ug/l | ND | 1 | | 2 | 0.095 | 1 | B | 2 | 0.036 | 1 | B | 2 | 0.43 | 1 | B | 2 | 0.063 | 1 | B | 2 | 0.11 | 1 | B J | 2 | 0.11 | 1 | B J | 2 | 0.096 | 1 | B | 2 |
| Arsenic | 7440-38-2 | 50000 | ug/l | 2.7 | 1 | | 1 | 0.29 | 1 | B | 1 | ND | 1 | | 1 | 100 | 1 | | 1 | 21.1 | 1 | | 1 | 21.5 | 1 | | 1 | 1.2 | 1 | | 1 | ND | 1 | | 1 |
| Barium | 7440-39-3 | 2000000 | ug/l | 59.4 | 1 | | 10 | 8.9 | 1 | B | 10 | 9 | 1 | B | 10 | 229 | 1 | | 10 | 50.1 | 1 | | 10 | 178 | 1 | | 10 | 29.1 | 1 | | 10 | 35.6 | 1 | | 10 |
| Beryllium | 7440-41-7 | 4000 | ug/l | ND | 1 | | 1 | ND | 1 | | 1 | ND | 1 | | 1 | ND | 1 | | 1 | ND | 1 | | 1 | ND | 1 | | 1 | ND | 1 | | 1 | ND | 1 | | 1 |
| Cadmium | 7440-43-9 | 5000 | ug/l | ND | 1 | | 1 | ND | 1 | | 1 | ND | 1 | | 1 | ND | 1 | | 1 | ND | 1 | | 1 | ND | 1 | | 1 | ND | 1 | | 1 | 0.15 | 1 | B | 1 |
| Chromium | 7440-47-3 | 100000 | ug/l | 3.2 | 1 | | 2 | 3.7 | 1 | | 2 | 3.4 | 1 | | 2 | 2.3 | 1 | | 2 | 2.7 | 1 | | 2 | 5.5 | 1 | | 2 | 5.5 | 1 | | 2 | 2.9 | 1 | | 2 |
| Cobalt | 7440-48-4 | 2000000 | ug/l | 4.9 | 1 | | 0.5 | 0.16 | 1 | B | 0.5 | 0.14 | 1 | B | 0.5 | 0.37 | 1 | B | 0.5 | 0.12 | 1 | B | 0.5 | 0.57 | 1 | | 0.5 | 0.1 | 1 | B | 0.5 | 0.6 | 1 | | 0.5 |
| Copper | 7440-50-8 | 1000000 | ug/l | 1.2 | 1 | B J | 2 | 0.7 | 1 | B J | 2 | 0.85 | 1 | B J | 2 | 0.78 | 1 | B J | 2 | 1.7 | 1 | B J | 2 | 0.39 | 1 | B | 2 | 0.51 | 1 | B | 2 | 1.6 | 1 | B J | 2 |
| Lead | 7439-92-1 | 5000 | ug/l | 0.042 | 1 | B | 1 | 0.059 | 1 | B | 1 | 0.046 | 1 | B | 1 | 0.14 | 1 | B | 1 | 0.12 | 1 | B J | 1 | ND | 1 | | 1 | ND | 1 | | 1 | 0.023 | 1 | B | 1 |
| Mercury | 7439-97-6 | 2000 | ug/l | ND | 1 | | 0.2 | ND | 1 | | 0.2 | ND | 1 | | 0.2 | ND | 1 | | 0.2 | ND | 1 | | 0.2 | ND | 1 | | 0.2 | ND | 1 | | 0.2 | ND | 1 | | 0.2 |
| Nickel | 7440-02-0 | 100000 | ug/l | 1.3 | 1 | | 1 | 0.7 | 1 | B | 1 | 0.66 | 1 | B | 1 | ND | 1 | | 1 | 0.32 | 1 | B | 1 | 2 | 1 | | 1 | 0.69 | 1 | B | 1 | 2.2 | 1 | | 1 |
| Selenium | 7782-49-2 | 50000 | ug/l | ND | 1 | | 5 | ND | 1 | | 5 | ND | 1 | | 5 | ND | 1 | | 5 | 0.66 | 1 | B | 5 | 1.8 | 1 | B | 5 | 2 | 1 | B | 5 | ND | 1 | | 5 |
| Silver | 7440-22-4 | 100000 | ug/l | ND | 1 | | 1 | ND | 1 | | 1 | ND | 1 | | 1 | ND | 1 | | 1 | ND | 1 | | 1 | ND | 1 | | 1 | ND | 1 | | 1 | ND | 1 | | 1 |
| Thallium | 7440-28-0 | 2000 | ug/l | 0.047 | 1 | B J | 1 | ND | 1 | | 1 | ND | 1 | | 1 | ND | 1 | | 1 | 0.027 | 1 | B J | 1 | 0.16 | 1 | B J | 1 | 0.13 | 1 | B J | 1 | 0.13 | 1 | B J | 1 |
| Tin | 7440-31-5 | 61000000 | ug/l | 1.7 | 1 | B | 5 | ND | 1 | | 5 | ND | 1 | | 5 | ND | 1 | | 5 | ND | 1 | | 5 | 11.1 | 1 | | 5 | 6.9 | 1 | | 5 | 1.5 | 1 | B | 5 |
| Vanadium | 7440-62-2 | 720000 | ug/l | ND | 1 | | 1 | ND | 1 | | 1 | ND | 1 | | 1 | 0.41 | 1 | B J | 1 | ND | 1 | | 1 | 2.7 | 1 | J | 1 | 0.37 | 1 | B J | 1 | ND | 1 | | 1 |
| Zinc | 7440-66-6 | 2000000 | ug/l | 10.8 | 1 | J | 5 | 16.2 | 1 | J | 5 | 11.3 | 1 | J | 5 | 6.7 | 1 | J | 5 | 4.2 | 1 | B J | 5 | 1.1 | 1 | B | 5 | 5.2 | 1 | | 5 | 63.5 | 1 | J | 5 |

**Table 6**
**Summary of Groundwater Analytical Results - June 2009**
**Comparison to Pennsylvania Non-Residential Non-Use Aquifer Groundwater MSCs**
**U.S. Steel - RCRA Groundwater Sampling**
**Fairless Hills, Pennsylvania**

| | CAS No | PADEP Non-Residential Non-Use Aquifer GW MSC | Location ID<br>Sample ID<br>Sample Date<br>Lab Id | MW6-05-28<br>MW6-05-28_061909<br>6/19/2009<br>C9F200181007 | | | | MW6-06-24<br>MW6-06-24_061909<br>6/19/2009<br>C9F200181008 | | | | MW6-08-28<br>MW6-08-28_061809<br>6/18/2009<br>C9F190331009 | | | | MW6-12-42<br>MW6-12-42_061809<br>6/18/2009<br>C9F190331010 | | | | MW6-20-37<br>MW6-20-37_061909<br>6/19/2009<br>C9F200181005 | | | | MW7-04-26<br>MW7-04-26_061809<br>6/18/2009<br>C9F190331008 | | | | MW7-05-28<br>MW7-05-28_061809<br>6/18/2009<br>C9F190331007 | | | |
|---|---|---|---|---|---|---|---|---|---|---|---|---|---|---|---|---|---|---|---|---|---|---|---|---|---|---|---|---|---|---|---|
| ***RCRA APPENDIX IX METALS - Dissolved (Method 6010/7471)*** | | | | Result | DF | Q | RL | Result | DF | Q | RL | Result | DF | Q | RL | Result | DF | Q | RL | Result | DF | Q | RL | Result | DF | Q | RL | Result | DF | Q | RL |
| Antimony | 7440-36-0 | 6000 | ug/l | 0.038 | 1 | B | 2 | ND | 1 | | 2 | 0.097 | 1 | B | 2 | 0.061 | 1 | B | 2 | 0.024 | 1 | B | 2 | 0.12 | 1 | B | 2 | 0.19 | 1 | B | 2 |
| Arsenic | 7440-38-2 | 50000 | ug/l | 0.33 | 1 | B | 1 | ND | 1 | | 1 | ND | 1 | | 1 | 0.4 | 1 | B | 1 | 1.2 | 1 | | 1 | 0.75 | 1 | B | 1 | 0.39 | 1 | B | 1 |
| Barium | 7440-39-3 | 2000000 | ug/l | 58.8 | 1 | | 10 | 34.8 | 1 | | 10 | 39.9 | 1 | | 10 | 8.7 | 1 | B | 10 | 15.4 | 1 | | 10 | 32.5 | 1 | | 10 | 67.4 | 1 | | 10 |
| Beryllium | 7440-41-7 | 4000 | ug/l | ND | 1 | | 1 | ND | 1 | | 1 | ND | 1 | | 1 | ND | 1 | | 1 | ND | 1 | | 1 | ND | 1 | | 1 | ND | 1 | | 1 |
| Cadmium | 7440-43-9 | 5000 | ug/l | ND | 1 | | 1 | 0.54 | 1 | B | 1 | 0.13 | 1 | B | 1 | 0.26 | 1 | B | 1 | ND | 1 | | 1 | ND | 1 | | 1 | ND | 1 | | 1 |
| Chromium | 7440-47-3 | 100000 | ug/l | 4.1 | 1 | | 2 | 3.7 | 1 | | 2 | 3.4 | 1 | | 2 | 2.9 | 1 | | 2 | 3 | 1 | | 2 | 3 | 1 | | 2 | 2.7 | 1 | | 2 |
| Cobalt | 7440-48-4 | 2000000 | ug/l | 1.4 | 1 | | 0.5 | 7.5 | 1 | | 0.5 | 1.5 | 1 | | 0.5 | 0.94 | 1 | | 0.5 | 5.5 | 1 | | 0.5 | 0.22 | 1 | B | 0.5 | 0.6 | 1 | | 0.5 |
| Copper | 7440-50-8 | 1000000 | ug/l | 1.3 | 1 | B J | 2 | 1.3 | 1 | B J | 2 | 2.1 | 1 | J | 2 | 5 | 1 | J | 2 | 1.7 | 1 | B J | 2 | 1.9 | 1 | B J | 2 | 2.7 | 1 | J | 2 |
| Lead | 7439-92-1 | 5000 | ug/l | 0.25 | 1 | B | 1 | 0.071 | 1 | B | 1 | 0.3 | 1 | B J | 1 | 0.85 | 1 | B J | 1 | 0.081 | 1 | B | 1 | 0.56 | 1 | B J | 1 | 0.6 | 1 | B J | 1 |
| Mercury | 7439-97-6 | 2000 | ug/l | ND | 1 | | 0.2 | ND | 1 | | 0.2 | ND | 1 | | 0.2 | ND | 1 | | 0.2 | ND | 1 | | 0.2 | ND | 1 | | 0.2 | ND | 1 | | 0.2 |
| Nickel | 7440-02-0 | 100000 | ug/l | 1 | 1 | | 1 | 17.9 | 1 | | 1 | 2 | 1 | | 1 | 2.3 | 1 | | 1 | 10.1 | 1 | | 1 | 0.78 | 1 | B | 1 | 1.4 | 1 | | 1 |
| Selenium | 7782-49-2 | 50000 | ug/l | ND | 1 | | 5 | ND | 1 | | 5 | ND | 1 | | 5 | ND | 1 | | 5 | ND | 1 | | 5 | ND | 1 | | 5 | ND | 1 | | 5 |
| Silver | 7440-22-4 | 100000 | ug/l | ND | 1 | | 1 | ND | 1 | | 1 | ND | 1 | | 1 | ND | 1 | | 1 | ND | 1 | | 1 | ND | 1 | | 1 | ND | 1 | | 1 |
| Thallium | 7440-28-0 | 2000 | ug/l | 0.02 | 1 | B J | 1 | 0.051 | 1 | B J | 1 | ND | 1 | | 1 | ND | 1 | | 1 | 0.25 | 1 | B J | 1 | 0.024 | 1 | B J | 1 | 0.058 | 1 | B J | 1 |
| Tin | 7440-31-5 | 61000000 | ug/l | ND | 1 | | 5 | ND | 1 | | 5 | ND | 1 | | 5 | ND | 1 | | 5 | 1.6 | 1 | B | 5 | ND | 1 | | 5 | ND | 1 | | 5 |
| Vanadium | 7440-62-2 | 720000 | ug/l | ND | 1 | | 1 | ND | 1 | | 1 | 0.46 | 1 | B J | 1 | ND | 1 | | 1 | ND | 1 | | 1 | ND | 1 | | 1 | ND | 1 | | 1 |
| Zinc | 7440-66-6 | 2000000 | ug/l | 9 | 1 | J | 5 | 2760 | 1 | J | 5 | 66.3 | 1 | J | 5 | 19.2 | 1 | J | 5 | 8.5 | 1 | J | 5 | 11.2 | 1 | J | 5 | 12.6 | 1 | J | 5 |

**Table 6**
**Summary of Groundwater Analytical Results - June 2009**
**Comparison to Pennsylvania Non-Residential Non-Use Aquifer Groundwater MSCs**
**U.S. Steel - RCRA Groundwater Sampling**
**Fairless Hills, Pennsylvania**

| | CAS No | PADEP Non-Residential Non-Use Aquifer GW MSC | Location ID<br>Sample ID<br>Sample Date<br>Lab Id | FB-01<br>FB-01_061709<br>6/17/2009<br>C9F180195005 | | | | FB-02<br>FB-02_061809<br>6/18/2009<br>C9F190331011 | | | | FB-03<br>FB-03_061909<br>6/19/2009<br>C9F200181014 | | | | TB-01<br>TB-01_061709<br>C9F180195006<br>39981 | | | | TB-02<br>TB-02_061809<br>C9F190331015<br>39982 | | | | TB-03<br>TB-03_061909<br>C9F200181015<br>39983 | | | |
|---|---|---|---|---|---|---|---|---|---|---|---|---|---|---|---|---|---|---|---|---|---|---|---|---|---|---|---|
| ***RCRA APPENDIX IX METALS - Dissolved (Method 6010/7471)*** | | | | Result | DF | Q | RL | Result | DF | Q | RL | Result | DF | Q | RL | Result | DF | Q | RL | Result | DF | Q | RL | Result | DF | Q | RL |
| Antimony | 7440-36-0 | 6000 | ug/l | 0.044 | 1 | B J | 2 | ND | 1 | | 2 | ND | 1 | | 2 | - | - | - | - | - | - | - | - | - | - | - | - |
| Arsenic | 7440-38-2 | 50000 | ug/l | 1.3 | 1 | | 1 | ND | 1 | | 1 | ND | 1 | | 1 | - | - | - | - | - | - | - | - | - | - | - | - |
| Barium | 7440-39-3 | 2000000 | ug/l | ND | 1 | | 10 | ND | 1 | | 10 | ND | 1 | | 10 | - | - | - | - | - | - | - | - | - | - | - | - |
| Beryllium | 7440-41-7 | 4000 | ug/l | ND | 1 | | 1 | ND | 1 | | 1 | ND | 1 | | 1 | - | - | - | - | - | - | - | - | - | - | - | - |
| Cadmium | 7440-43-9 | 5000 | ug/l | ND | 1 | | 1 | ND | 1 | | 1 | ND | 1 | | 1 | - | - | - | - | - | - | - | - | - | - | - | - |
| Chromium | 7440-47-3 | 100000 | ug/l | 6.5 | 1 | | 2 | 3.5 | 1 | | 2 | 3.2 | 1 | | 2 | - | - | - | - | - | - | - | - | - | - | - | - |
| Cobalt | 7440-48-4 | 2000000 | ug/l | ND | 1 | | 0.5 | ND | 1 | | 0.5 | ND | 1 | | 0.5 | - | - | - | - | - | - | - | - | - | - | - | - |
| Copper | 7440-50-8 | 1000000 | ug/l | ND | 1 | | 2 | 1.8 | 1 | B J | 2 | 0.52 | 1 | B J | 2 | - | - | - | - | - | - | - | - | - | - | - | - |
| Lead | 7439-92-1 | 5000 | ug/l | ND | 1 | | 1 | 0.15 | 1 | B J | 1 | 0.093 | 1 | B | 1 | - | - | - | - | - | - | - | - | - | - | - | - |
| Mercury | 7439-97-6 | 2000 | ug/l | ND | 1 | | 0.2 | ND | 1 | | 0.2 | ND | 1 | | 0.2 | - | - | - | - | - | - | - | - | - | - | - | - |
| Nickel | 7440-02-0 | 100000 | ug/l | ND | 1 | | 1 | ND | 1 | | 1 | ND | 1 | | 1 | - | - | - | - | - | - | - | - | - | - | - | - |
| Selenium | 7782-49-2 | 50000 | ug/l | ND | 1 | | 5 | ND | 1 | | 5 | ND | 1 | | 5 | - | - | - | - | - | - | - | - | - | - | - | - |
| Silver | 7440-22-4 | 100000 | ug/l | ND | 1 | | 1 | ND | 1 | | 1 | ND | 1 | | 1 | - | - | - | - | - | - | - | - | - | - | - | - |
| Thallium | 7440-28-0 | 2000 | ug/l | 0.038 | 1 | B J | 1 | ND | 1 | | 1 | ND | 1 | | 1 | - | - | - | - | - | - | - | - | - | - | - | - |
| Tin | 7440-31-5 | 61000000 | ug/l | 3.7 | 1 | B | 5 | ND | 1 | | 5 | ND | 1 | | 5 | - | - | - | - | - | - | - | - | - | - | - | - |
| Vanadium | 7440-62-2 | 720000 | ug/l | 0.14 | 1 | B J | 1 | 0.083 | 1 | B J | 1 | 1.1 | 1 | J | 1 | - | - | - | - | - | - | - | - | - | - | - | - |
| Zinc | 7440-66-6 | 2000000 | ug/l | 1.4 | 1 | B | 5 | 4.2 | 1 | B J | 5 | 3.2 | 1 | B J | 5 | - | - | - | - | - | - | - | - | - | - | - | - |

Notes:
Q - Qualifier
B - Method Blank contamination. The associated method blank contains the target analyte at a reportable level.
E - Estimated result. Result concentration exceeds the calibration range.
J - Estimated result. Result is less than RL.
p - Relative percent difference (RPD) is outside stated control limits.
* - Surrogate recovery is outside stated control limits.
a - Spiked analyte recovery is outside stated control limits.
DF - Dilution Factor
RL - Reporting Limit
**1.5** - Results exceed Non-Residential Non-Use Aquifer PADEP Groundwater MSC
***21*** - Reporting Limit exceeds Non-Residential Non-Use Aquifer PADEP Groundwater MSC

Tyburn Rd.

New Jersey

295

Biles Creek

Delaware River

G.R.O.W.S. Landfill

New Jersey

MW7-05-23
MW7-04-26
MW7-09-17
MW5-11-27
MW5-12-27
MW5-18-26
MW5-22-32
MW5-21-20
MW5-23-42
MW5-41-19
MW5-32-31
MW5-31-21
MW5-33-41
MW5-07-24
MW5-29-49
MW5-28-31
MW5-25-27
MW5-26-52
MW5-27-17
MW3-02-27
MW3-34-28
MW3-22-28
MW3-04-30
MW3-29-29
MW3-41-29
MW3-44-14
MW1-25-22
MW1-02-31
MW1-24-23
MW1-23-47
MW1-12-29
MW1-26-27
MW1-15-29
MW1-28-74
MW1-27-19
MW1-10-32
MW2-01-22
MW2-03-33
MW4-02-24
MW3-12-31
MW4-33-25
MW4-11-33
MW4-14-36
MW4-30-63
MW4-10-23
MW6-20-37
MW6-12-42
MW6-26-20
MW6-04-29
MW6-06-24
MW6-08-28
MW6-05-28
MW6-29-73
MW6-02-27

| MW6-05-28 | | |
|---|---|---|
| 10/15/2008 | | |
| SVOCs | PADEP Act 2 Non-Res, Non-Use GWQS (ug/L) | Result (ug/L) |
| Benzo(g,h,i)perylene | 0.26 | **0.95** |
| Benzo(k)fluoranthene | 0.55 | **0.72** |
| Dibenzo(a,h)anthracene | 0.6 | **1.0** |

| MW6-02-27 | | |
|---|---|---|
| 10/14/2008 | | |
| SVOCs | PADEP Act 2 Non-Res, Non-Use GWQS (ug/L) | Result (ug/L) |
| Benzo(g,h,i)perylene | 0.26 | **0.77** |
| Dibenzo(a,h)anthracene | 0.6 | **0.9** |

| MW6-08-28 | | |
|---|---|---|
| 6/18/2009 | | |
| SVOCs | PADEP Act 2 Non-Res, Used Aquifer GWQS (ug/L) | Result (ug/L) |
| BENZO(GHI)PERYLENE | 0.26 | **0.88** |
| DIBENZO(A,H)ANTHRACENE | 0.6 | **1.5** |

| MW7-04-26 | | |
|---|---|---|
| 6/18/2009 | | |
| SVOCs | PADEP Act 2 Non-Res,Non-Use Aquifer GWQS (ug/L) | Result (ug/L) |
| BENZO(GHI)PERYLENE | 0.26 | **0.84** |
| DIBENZO(A,H)ANTHRACENE | 0.6 | **1.4** |

| MW6-04-29 | | |
|---|---|---|
| 10/15/2008 | | |
| SVOCs | PADEP Act 2 Non-Res, Non-Use GWQS (ug/L) | Result (ug/L) |
| Benzo(g,h,i)perylene | 0.26 | **1.2** |
| Benzo(k)fluoranthene | 0.55 | **1.3** |
| Dibenzo(a,h)anthracene | 0.6 | **1.3** |

| MW6-20-37 | | |
|---|---|---|
| 10/17/2008 | | |
| SVOCs | PADEP Act 2 Non-Res, Non-Use GWQS (ug/L) | Result (ug/L) |
| Benzo(g,h,i)perylene | 0.26 | **0.63** |
| Dibenzo(a,h)anthracene | 0.6 | **0.97** |

| MW4-30-63 | | |
|---|---|---|
| 10/20/2008 | | |
| SVOCs | PADEP Act 2 Non-Res, Non-Use GWQS (ug/L) | Result (ug/L) |
| Benzo(g,h,i)perylene | 0.26 | **0.8** |

| MW5-33-41 | | |
|---|---|---|
| 10/20/2008 | | |
| SVOCs | PADEP Act 2 Non-Res, Non-Use GWQS (ug/L) | Result (ug/L) |
| Benzo(g,h,i)perylene | 0.26 | **1.1** |
| Benzo(k)fluoranthene | 0.55 | **0.99** |
| Dibenzo(a,h)anthracene | 0.6 | **1.4** |

| MW5-25-27 | | |
|---|---|---|
| 10/20/2008 | | |
| SVOCs | PADEP Act 2 Non-Res, Non-Use GWQS (ug/L) | Result (ug/L) |
| Benzo(g,h,i)perylene | 0.26 | **0.9** |
| Benzo(k)fluoranthene | 0.55 | **0.7** |

| MW5-26-52 | | |
|---|---|---|
| 10/20/2008 | | |
| SVOCs | PADEP Act 2 Non-Res, Non-Use GWQS (ug/L) | Result (ug/L) |
| Benzo(g,h,i)perylene | 0.26 | **0.87** |
| Benzo(k)fluoranthene | 0.55 | **0.64** |
| Dibenzo(a,h)anthracene | 0.6 | **1.2** |

| MW5-29-49 | | |
|---|---|---|
| 10/17/2008 | | |
| SVOCs | PADEP Act 2 Non-Res, Non-Use GWQS (ug/L) | Result (ug/L) |
| Benzo(g,h,i)perylene | 0.26 | **0.64** |
| Benzo(k)fluoranthene | 0.55 | **0.77** |
| Dibenzo(a,h)anthracene | 0.6 | **0.95** |

| MW4-02-24 | | |
|---|---|---|
| 6/18/2009 | | |
| SVOCs | PADEP Act 2 Non-Res, Used Aquifer GWQS (ug/L) | Result (ug/L) |
| BENZO(B)FLUORANTHENE | 1.2 | **2.8** |
| BENZO(GHI)PERYLENE | 0.26 | **3.4** |
| BENZO(K)FLUORANTHENE | 0.55 | **2.5** |
| CHRYSENE | 1.9 | **2.8** |
| DIBENZO(A,H)ANTHRACENE | 0.6 | **3.8** |

| MW2-03-33 | | |
|---|---|---|
| 10/16/2008 | | |
| SVOCs | PADEP Act 2 Non-Res, Non-Use GWQS (ug/L) | Result (ug/L) |
| Benzo(g,h,i)perylene | 0.26 | **0.64** |
| Benzo(k)fluoranthene | 0.55 | **0.76** |
| Dibenzo(a,h)anthracene | 0.6 | **0.95** |

| MW3-29-29 | | |
|---|---|---|
| 6/18/2009 | | |
| SVOCs | PADEP Act 2 Non-Res,Non-Use Aquifer GWQS (ug/L) | Result (ug/L) |
| BENZO(GHI)PERYLENE | 0.26 | **0.87** |
| DIBENZO(A,H)ANTHRACENE | 0.6 | **1.4** |

| MW1-02-31 | | |
|---|---|---|
| 10/17/2008 | | |
| SVOCs | PADEP Act 2 Non-Res, Non-Use GWQS (ug/L) | Result (ug/L) |
| Benzo(k)fluoranthene | 0.55 | **0.76** |

| MW1-15-29 | | |
|---|---|---|
| 10/16/2008 | | |
| SVOCs | PADEP Act 2 Non-Res, Non-Use GWQS (ug/L) | Result (ug/L) |
| Benzo(g,h,i)perylene | 0.26 | **0.61** |
| Benzo(k)fluoranthene | 0.55 | **0.74** |
| Dibenzo(a,h)anthracene | 0.6 | **0.98** |

| MW1-23-47 | | |
|---|---|---|
| 10/15/2008 | | |
| SVOCs | PADEP Act 2 Non-Res, Non-Use GWQS (ug/L) | Result (ug/L) |
| Benzo(b)fluoranthene | 1.2 | **2.9** |
| Benzo(g,h,i)perylene | 0.26 | **3.8** |
| Benzo(k)fluoranthene | 0.55 | **3.5** |
| Chrysene | 1.9 | **3.8** |
| Dibenzo(a,h)anthracene | 0.6 | **3.7** |

N
W
E
S

PENNSYLVANIA

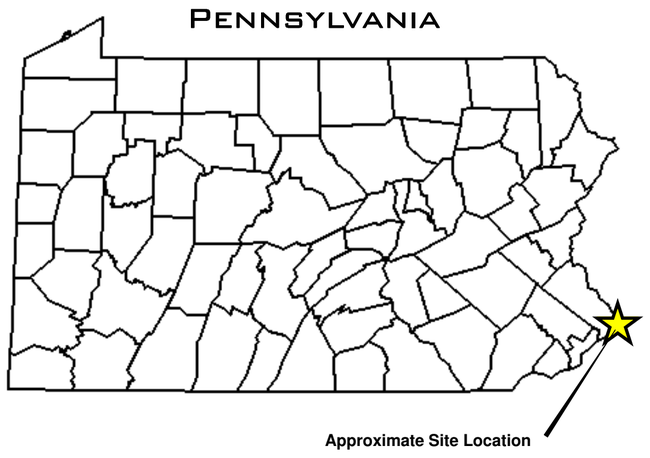

Approximate Site Location

**Legend**

Consent Order Boundary

MW1-27-19 Monitoring Well Location

NOTES
1. Consent Order Boundary georeferenced from the U.S. Steel 1994 Current Conditions Report.
2. 2007 aerial photography provided by U.S. Steel, March 6, 2008.
3. Site monitoring wells were gauged between October 13 and October 14, 2008, and sampled between October 14 and October 20, 2008.
4. All groundwater sample results were screened against the PADEP Act 2 Non-Residential Non-Use Aquifer standards.
5. MW1-25-22, MW3-04-30, MW3-22-28, MW3-44-14 and MW6-29-73 were damaged and therefore not sampled.

**Figure 5 - Non-Residential Non-Use Aquifer Groundwater MSC Exceedance Map October 2008 & June 2009 U.S. Steel Fairless Works Keystone Industrial Port Complex Fairless Hills, Pennsylvania**

LANGAN
ENGINEERING & ENVIRONMENTAL SERVICES

0 700 1,400 Feet

SCALE: 1" = 700'
DATE: August 2, 2010
DRN. BY: MH
CKD. BY: JH
JOB#: 2634102

S:\other\USSteel\GIS_Database\ArcGIS\Working MXDs\Sitewide\Sitewide_GW_Exceedances NonRes NonUse Oct2008_June09_8-2-2010.mxd

APPENDIX D-13

BCM 1997 REPORT

PHASE I

# RCRA FACILITY INVESTIGATION FINAL REPORT

## U.S. STEEL FAIRLESS WORKS
## FAIRLESS HILLS, PENNSYLVANIA

PREPARED FOR:

U.S. STEEL
A UNIT OF USX CORPORATION

SEPTEMBER 19, 1997

BCM ENGINEERS, INC.
PROJECT NO. 00-5039-7023

One Plymouth Meeting • Plymouth Meeting, PA 19462 • Phone: (610) 825-3800

A subsequent set of groundwater table measurements was obtained for the purpose of verifying the groundwater flow model on September 4, 1996, and is shown in Table 2-12. The average head was calculated for wells subject to tidal fluctuation, in the same manner described above. Figure 2-26 depicts the tidal range in the Delaware River for that period. The groundwater contour map for the water table aquifer, based on September 4, 1996 water levels, is shown as Figure 2-27. The groundwater contours are an average of about 2 feet higher than the March 10, 1995 levels (due to the abnormally high precipitation during the summer of 1996), but the general flow pattern is very similar.

### 2.3.4 Aquifer Slug Testing

To aid in calibration of the groundwater model, aquifer slug tests were performed in two wells screened in the confined aquifer, MW1-22-173 and MW4-15-119 (formerly well 88). The purpose of the slug tests was to determine a reasonable range of permeability values for the confined aquifer.

Slug tests were performed at the two well locations on June 9, 1995. For the slug test method, the hydraulic head in a monitoring well is suddenly changed by the immersion or withdrawal of a cylinder of known volume (slug) into or out of the well. The rate of hydraulic head recovery to equilibrium was measured with a pressure transducer and electronic recording device. These data were evaluated using the Cooper, Bredehoeft, and Papadopulos method for estimating hydraulic conductivity in a confined aquifer (Cooper, *et al.*, 1967).

The data obtained during the slug tests are presented in Appendix 2-7, along with graphs showing changes in hydraulic head and type-curve matches. The calculated aquifer characteristics are shown in Table 2-13.

Parameters were not determined for well MW1-22-173. When the slug was placed in this well, the hydraulic head increased correspondingly. However, the water level did not respond by decreasing as water flowed back into the formation. Instead, the water level stabilized at the higher level. Because of this odd response, the test was attempted a second time with the same results. The results of the slug test show that this well is poorly connected to the sand unit in which it is screened. A possible reason for this poor connection is that the well may need additional development. The borehole was drilled using mud rotary techniques which introduce clays into the formation.

On February 4, 1997, additional slug tests were completed in the following wells:

- MW6-20-37, MW4-37-29, MW1-27-19 (shallow water table aquifer wells)
- MW6-29-73, MW2-4-77, MW1-28-74 (deep water table aquifer wells)
- MW7-14-75 (confined aquifer well)

The method of Bouwer and Rice (1976) was used to calculate the hydraulic conductivity in the water table zones. Test data obtained from well MW7-14-75 was evaluated using the Cooper, Bredehoeft, and Papadopulos method for estimating hydraulic conductivity in a confined aquifer (Cooper, *et al.*, 1967).

Slug test results are provided in Table 2-14. Raw data and calculations are included in Appendix 2-8. Average hydraulic conductivities for the shallow water table aquifer ranged from 2.4 to 76.8 ft/day, with an average value of 35.8 ft/day. Average hydraulic conductivities for the deep water table aquifer ranged from 48.8 to 93.2 ft/day, with an average value of 49.9 ft/day. The hydraulic conductivity in the confined aquifer was 49.3 ft/day.

## 2.4 OPEN WATER HABITATS

There are substantial areas of aquatic and semi-aquatic habitat located in the on site open waters and on site canals which are SWMUs or AOCs. Potential impacts to these habitats were evaluated as part of the Phase I RFI activities, and the results of this evaluation are described in Section 6.2.1. Because these habitats are associated with SWMUs/AOCs, they are the most likely of such habitat locations to have potentially been impacted by contamination at the site.

Historical aerial photography, prior to 1952, indicates that nearly the entire property was used for agricultural purposes. During construction of Fairless Works, borrow pits were excavated to provide fill material and raise the elevation of production facilities above the floodplain. Many of these borrow pits were partially or completely backfilled with slag and other material.

The on site open waters habitats have developed naturally, in borrow pits that were left open or partially backfilled. The developing habitats in these on site open waters reflect the conditions present in the borrow pits.

Similarly, the canals were created by U.S. Steel to convey process water, non-contact cooling water, and stormwater to the Delaware River. Aquatic and semi-aquatic habitats have developed naturally, in and along the canals. These habitats reflects the physical and potentially the chemical conditions present.

The evaluation of on site open waters and canal habitats in the Phase I RFI is aimed at determining, through the evaluation of a sensitive biological community (anurans) in on site open waters and benthic communities in the canals, whether there are impacts from contamination. Section 6.2 presents the results of these evaluations.

## 2.5 SURFACE WATER

Surface water bodies adjacent to or within Fairless Works include the Delaware River and Biles Creek (which is a small channel of the Delaware River that separates Biles Island from the

### 5.3.2 Input Parameters

The model inputs for the lateral extent and elevations of the top and bottom of each Layer are shown on Figures 5-3 through 5-6. A three-dimensional depiction of the model layers is shown in Figure 5-7.

Table 5-2 summarizes the input parameter values used for the modeling. The table shows the range of measured values, as well as the range considered for input to the model. The initial input value and the calibrated value is shown.

The values that were selected for hydraulic conductivities were based on hydrogeologic testing performed as part of previous environmental studies at Fairless Works. Chester Engineers (1981) performed constant rate pumping tests for approximately one hour on 14 wells screened in the shallow water table aquifer. Hydraulic conductivities ranged from 0.6 to 370 feet/day, with a geometric mean of 7.2 feet/day.

Slug tests were performed by Golder Associates in 1988 on 16 shallow wells. Six of these wells responded too quickly to obtain useable data; calculated values of hydraulic conductivity for the remaining eight wells ranged from 0.057 to 82 feet/day, with a geometric mean of 2.1 feet/day.

In 1988 (WMNA, 1988), aquifer pumping tests were performed in both the shallow and deep portions of the water table aquifer, and in the confined aquifer. The results of these tests are provided in Table 5-3. Because the results of aquifer pumping tests are more representative of aquifer behavior as a whole, unbiased by local conditions, the hydraulic conductivity values obtained from the pumping tests were used as the initial model inputs.

Values for vertical hydraulic conductivity were initially estimated, based on the characteristics of the individual formations. The lakes were input as constant head cells in Layer 1. The input value of head at each lake was determined from the measured water levels obtained on March 10, 1995. The Delaware River, Biles Creek, and the canals were input as river cells in Layer 1. The input head in each canal was obtained from the field data collected on March 10, 1995. The head in the River and Biles Creek are subject to strong tidal fluctuations, and so were initially assigned mean tidal stage values. The locations of both the constant head cells (lakes) and the river cells for Layer 1 are shown on Figure 5-8. None of these types of cells are present in Layers 2 or 3.

### 5.3.3 Sensitivity Analyses

An initial sensitivity analyses was used to identify input parameters for which additional field data might need to be obtained. This sensitivity analyses also helped guide the model calibration, by eliminating insensitive parameters from the calibration process.

Fifty-six simulations were run to evaluate sensitivity. Fifteen of these were used to evaluate the northern boundary of the model, which does not correspond to a natural boundary of the aquifers.

## TABLE 2-13

## AQUIFER CHARACTERISTICS FROM SLUG TESTING

| Well | Transmissivity ($ft^2$/day) | Hydraulic Conductivity (ft/day) | Storage |
|---|---|---|---|
| MW1-22-173 | not determined | not determined | not determined |
| MW4-15-119, Test 1 | 90 | 4.5 | $3x10^{-6}$ |
| MW4-15-119, Test 2 | 95 | 4.5 | $1x10^{-9}$ |

Source: BCM Engineers Inc. Project No. 00-5039-7023

TABLE 2-14

SLUG TEST EVALUATION OF SELECTED WELLS
U.S. STEEL FAIRLESS WORKS

February 1997

| Well | Falling K (ft/d) | Rising K (ft/d) | means | Water-Bearing Zone |
|---|---|---|---|---|
| MW4-37-29 | 2.4 | 2.3 | 2.4 | SHALLOW WATER TABLE |
| MW1-27-19 | 32.7 | 27.5 | 30.1 | SHALLOW WATER TABLE |
| MW6-6-24 | 60.4 | 93.2 | 76.8 | SHALLOW WATER TABLE |
| mean | 36.4 | 35.3 | 35.8 | SHALLOW WATER TABLE |
| MW2-4-77 | 90.2 | 96.2 | 93.2 | DEEP WATER TABLE |
| MW6-29-73 | 95.0 | 84.6 | 89.8 | DEEP WATER TABLE |
| MW1-28-74 | 47.7 | 50.0 | 48.8 | DEEP WATER TABLE |
| mean | 77.3 | 22.4 | 49.9 | DEEP WATER TABLE |
| MW7-14-75 | 22.8 | 75.9 | 49.3 | CONFINED AQUIFER |

Source: BCM Engineers Inc., Project No. 00-5039-7023

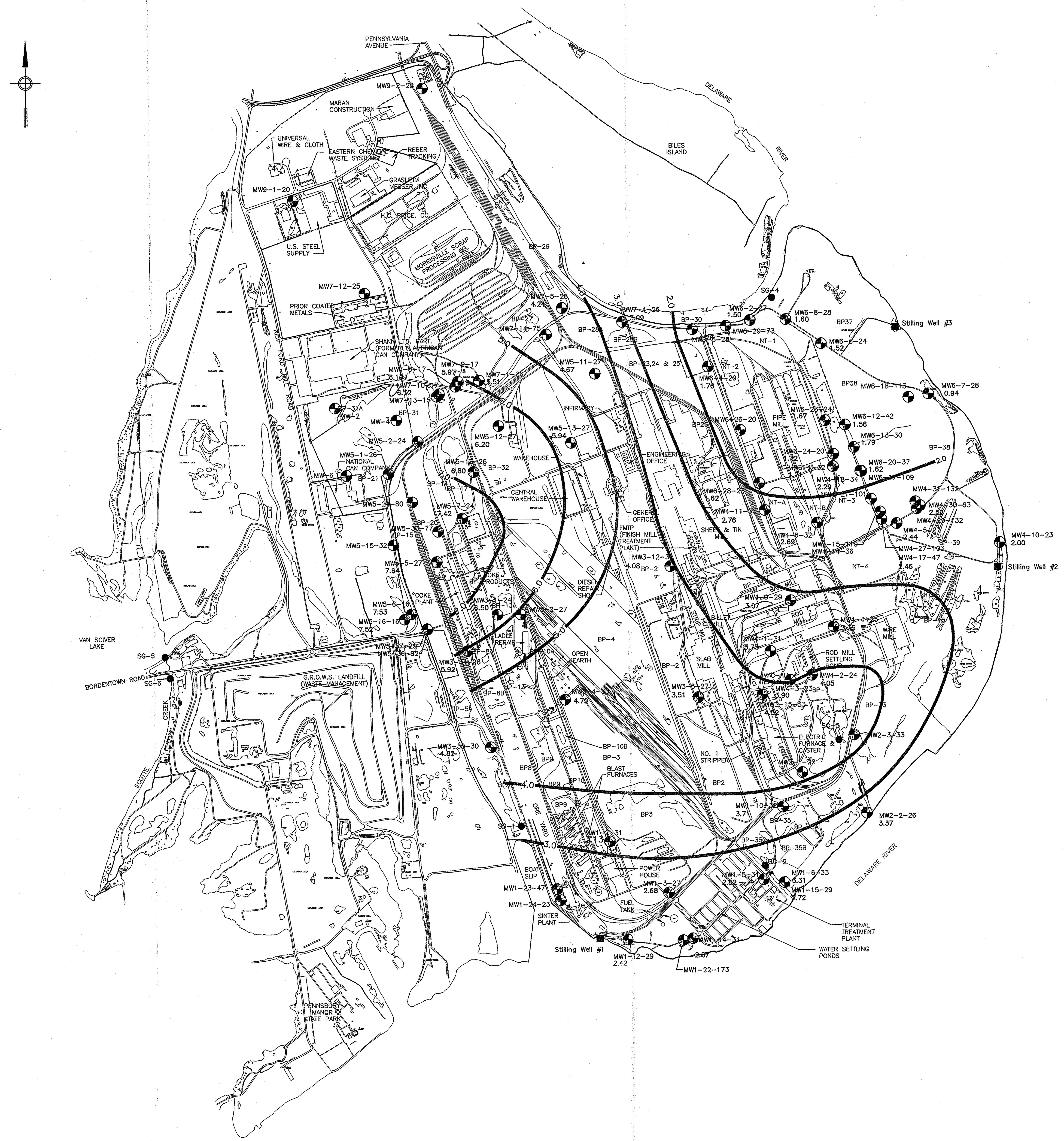


LEGEND

- MONITORING WELL
- STAFF GAUGE
- STILLING WELL
- 2.72 GROUNDWATER ELEVATION IN WATER TABLE AQUIFER 3/10/95 (FEET)
- CONTOURS OF GROUNDWATER

GRAPHIC SCALE

SCALE: 1" = 800'

800 400 0 800 1600 2400

| NO. | REVISIONS | DATE | ENGR. | NO. | REVISIONS | DATE | ENGR. | DATE | ISSUED FOR |
|---|---|---|---|---|---|---|---|---|---|
| | | | | | | | | | |

BCM Engineers Inc.

One Plymouth Meeting
Plymouth Meeting, PA 19462

©1997 BCM ENGINEERS Inc.

| | | |
|---|---|---|
| PROJECT HYDROGEOLOGIST AEP | APPROVED | SEAL |
| DRAWN BY RME | | COMMONWEALTH OF PENNSYLVANIA REGISTERED PROFESSIONAL BRUCE R. CUSHING GEOLOGIST 0032-G |
| PROJECT GEOLOGIST STW | APPROVED | |
| PROJECT MGR. BRC | | |
| CHECKED BY BRC | DATE 9/19/97 | |

**U.S. STEEL**
**FAIRLESS WORKS**
FAIRLESS HILLS, PENNSYLVANIA

GROUNDWATER CONTOUR MAP
WATER TABLE AQUIFER
MARCH 10, 1995

| | |
|---|---|
| SCALE | AS NOTED |
| PROJECT NO. | 00-5039-7023 |
| FIGURE NO. | FIGURE 2-25 |
| SHEET | OF |

rawing: U-FIG-1
efs: USX-1.DWG

APPENDIX D-14

AGRICULTURAL SECURITY AREAS

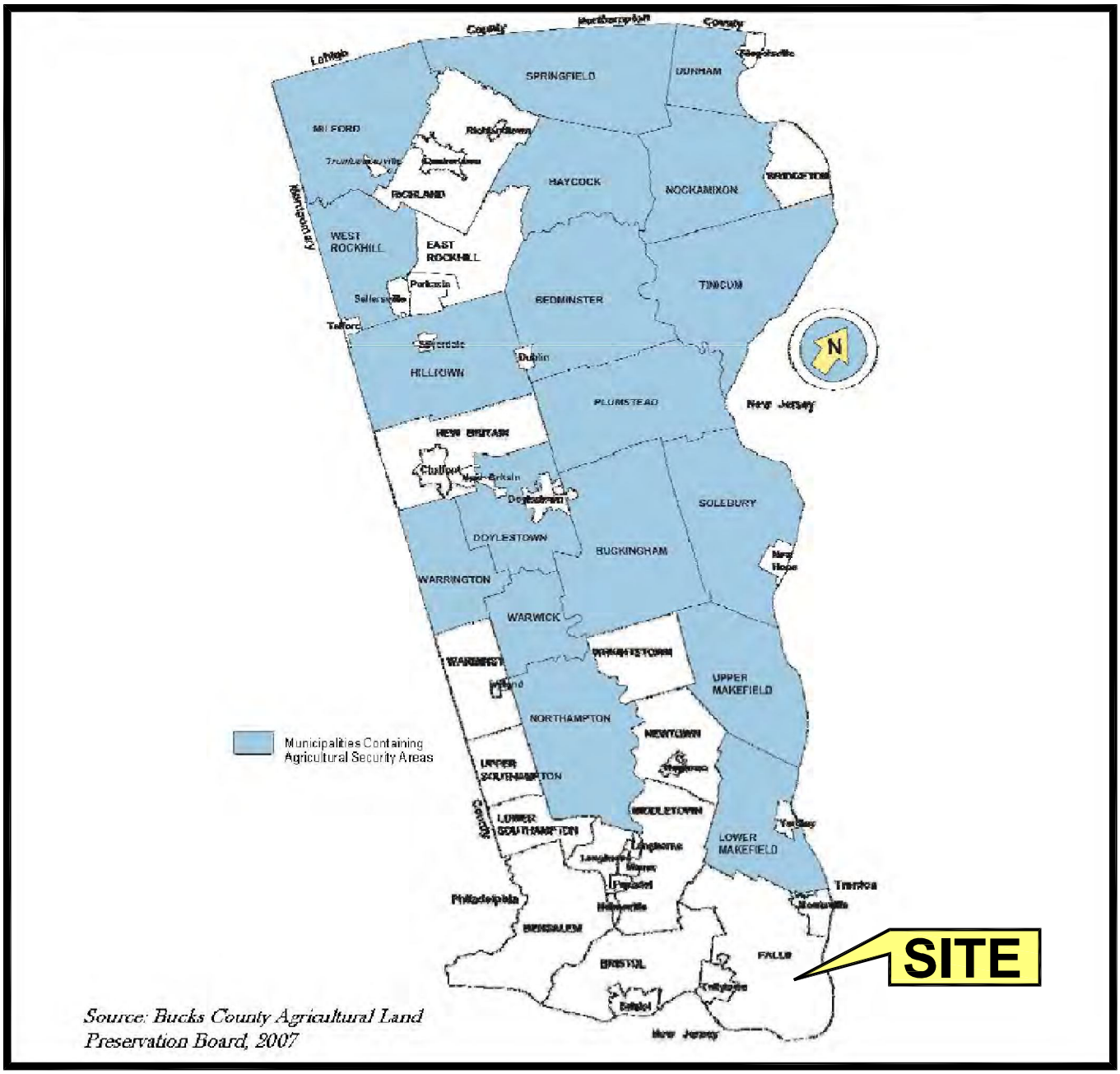


*Source: Bucks County Agricultural Land Preservation Board, 2007*

# MUNICIPALITIES CONTAINING AGRICULTURAL SECURITY AREAS WITHIN BUCKS COUNTY, PENNSYLVANIA

NOTES:

1. MAP ENTITLED "MAP 3: MUNICIPALITIES CONTAINING AGRICULTURAL SECURITY AREAS" OBTAINED FROM BUCKS COUNTY, PENNSYLVANIA AGRICULTURAL LAND PRESERVATION PROGRAM 2007 ANNUAL REPORT.
2. SCALE: N/A

| Attachment A4 | | |
|---|---|---|
| AGRICULTURAL SECURITY AREAS | | |
| ENGINEERS | ELCON RECYCLING FACILITY<br>FALLS TOWNSHIP,<br>BUCKS COUNTY, PA | |
| | DATE:<br>4/17/15 | BY:<br>PHC |

APPENDIX D-15

PORTIONS OF ACT 2 FINAL REPORT FOR 32-ACRE PARCEL

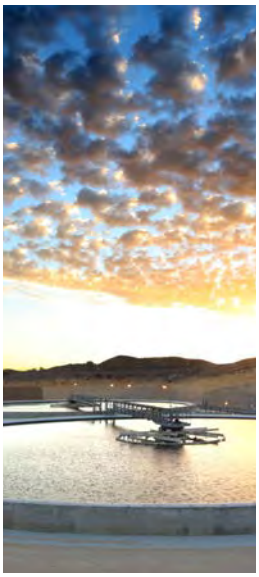
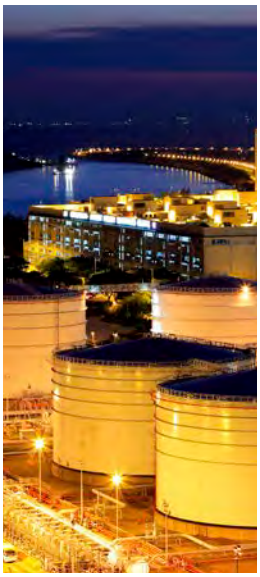

# Act 2 Final Report for 32-Acre Parcel

Keystone Industrial Port Complex U.S. Steel
Fairless Hills, Bucks County, Pennsylvania

USS Real Estate

410 Eagleview Boulevard, Suite 110 Exton Pennsylvania 19341

083101 | Report No 6 | September 08 2015

Steel-making operations ceased in 1991 when the last blast furnace, open hearths, and primary mills were shut down. Currently, only the galvanizing facility is still operating.

### *Site*

The Site area includes a small portion of former borrow pit BP-31A. The portion of borrow pit BP-31A (approx. 0.7 acres) that is on the Site is presented on Figure 3.1. Borrow Pit BP-31A was part of a complex of pits that includes BP-21 and BP-31. Borrow Pit BP-31A was located adjacent to Steel Road South by Dean Siever's Place. This pit is irregular in shape and occupies approximately 28.5 acres. Only a small portion of BP-31A (approx. 0.7 acres) extends onto the Site. The pit was filled with blast furnace slag. The central portion of the borrow pit was filled to grade. This pit was active from 1952 to 1980. The Description of Current Conditions (DOCC; BCM, 1994) did not identify any sources or risk of contamination in this area. The Site also includes a storm water ditch of approximately 2.6 acres on the west side of the parcel which was formerly referred to as North Canal system, which drains north and then east to Biles Creek. The Site lays in close proximity to other waterbodies that area currently known to support State-listed species of concern (i.e., rare, threatened, and endangered fish, reptiles, and amphibians).

Fourteen soil samples (four from soil borings and ten from test pits) were collected from the 32-acre area in 1998 and analyzed for select volatile organic compounds (VOCs), select semi-VOCs (SVOCs), Total Petroleum Hydrocarbons (TPH), and priority pollutant (PP) metals. In addition, three sediment samples were also collected from the stormwater ditch on the west side of the parcel in 1998 and analyzed for select VOCs, select SVOCs, TPH, and PP metals.

In addition, 28 soil samples from 14 boreholes (14 surficial [0-2 feet (ft) below ground surface (bgs)] and 14 sub-surface soil samples [greater than 2 ft bgs]) and 3 surface water samples were collected between June 24, 2014 and June 26, 2014 from the 32-acre area and analyzed for Target Compound List (TCL) VOCs, TCL SVOCs, polychlorinated biphenyl (PCBs), and PP metals.

## 2.3 Physiography and Topography

The Facility is located on a broad alluvial plain of the Delaware River (Figure 1.1). The Facility elevation is approximately 10 to 20 ft above mean sea level (AMSL). The alluvial plain lies on the inside bend of a major change in the river channel direction from southeast to southwest. The change in direction corresponds to the emergence of the river from the undulating, rolling low relief hills of the Piedmont Physiographic Province to the relatively flat Atlantic Coastal Plain Province. In the northeastern United States, the boundary between these two provinces is commonly termed the “Fall Line” that trends northeast-southwest (NE-SW) and lies approximately 5 miles northwest of the Facility.

The Piedmont Province consists of a series of NE-SW trending uplands composed of rounded hills and plains cut by relatively narrow valleys. The altitude of the region ranges from 40 to 700 ft AMSL, with local relief not greater than 200 ft. The slope of the whole region is gradually to the southeast. The Piedmont Province is underlain by crystalline rocks of Pre-Cambrian and Cambrian age (Kimball, 1976).

The Atlantic Coastal Plain Province is a low-lying, gently rolling plain. At the Facility, the slope is generally to the southeast toward the Delaware River. The Coastal Plain is composed of unconsolidated or poorly consolidated, flat-lying sediment strata consisting of clay, silt, sandy clay,

sand, and gravel of the Mesozoic and Cenozoic age. The beds thicken to the southeast and overlie some of the consolidated crystalline rocks that are at or near the surface in the Piedmont Province.

A review of the Trenton East and Trenton West, New Jersey USGS 7.5-minute series topographic quadrangle maps and Facility engineering plans, ground surface across the Site ranges from 11.5 to 20 feet AMSL. On the western side of the Site', the existing ground surface slopes gradually downward having elevations of less than 11.5 feet AMSL.

### 2.4 Geologic and Hydrogeologic Setting

According to the Soil Survey of Bucks and Philadelphia Counties, Pennsylvania: U.S. Department of Agriculture, Map 73 (Thompkins, Edward A., July 1975), the Facility is covered by Urban Land, 0 to 8 percent slopes. The Urban Land-Howell Complex is the second most predominant soil type at the Facility. Urban land is soil that has been modified by disturbance of the natural layers with addition of fill material to accommodate large industrial and housing installations. The existing surface of the Site is composed predominantly of fill (slag, brick, ash, silt, and gravel).

Based on data obtained from the Site borings and test pits advanced, the Site overburden is comprised of fill material overlying fine to coarse sand/gravel, silts, and clays. In general, the fill varied in thickness from 4.5 to 15 ft. Fill material generally included fines with some slag. Native soil encountered beneath the fill material appear to be indicative of the Trenton Gravel Series, generally consisting of fine to coarse gravel, sand, with some silt and minor amounts of clay. The upper-most water bearing unit occurs in the unconsolidated native material and is unconfined. The depth to water in the soil borings was encountered at depths ranging from 5 to 13.5 ft bgs.

Bedrock was not encountered in any of the borings during the Site characterization; however, the 1997 RCRA Facility Investigation Report noted that the Site is underlain by the Wissahickon Schist and bedrock generally is located at depths ranging from approximately 80 to 100 ft bgs.

## 3. Site Characterization

The following presents a summary of the methodology and procedures followed during the Site characterization. All investigation activities were performed in accordance with standard industry practice and guidelines described in the Land Recycling Program Technical Guidance manual (June 8, 2002) and following proper health and safety protocols required by Occupational Safety and Health Administration (OSHA) Regulations 1910.120.

Prior to the start of the investigation, utilities were cleared through the Pennsylvania One Call system and USS personnel.

To evaluate historical soil concentrations (September 1998), additional soil and surface water sampling was conducted in June 2014. The soil borings were advanced in the subsurface using direct-push technology (i.e., Geoprobe®). The soil boring locations are presented on Figure 3.1. The soil borings were advanced to a depth equivalent to the top of the upper-most water bearing unit. Soil samples were collected continuously in 4-ft long macrocores for each boring location. Soil was classified in general accordance with the Unified Soil Classification System (USCS). The macrocores were opened and then screened using a RAE Systems MiniRae 2000 Photoionization Detector (PID) for possible presence of VOCs. The PID was calibrated daily prior to use.

APPENDIX D-16

WETLANDS DELINEATION REPORT

CONESTOGA-ROVERS
& ASSOCIATES

410 Eagleview Blvd, Suite 110
Exton, Pennsylvania 19341
Telephone: (610) 321-1800 Fax: (610) 321-2763
http://www.craworld.com

August 13, 2014 Reference No. 085945

Marjorie J. Fitzpatrick, QEP
Principal Project Manager
IES Engineers
1720 Walton Road
Blue Bell, PA 19422

Re: Wetland Delineation Report
33-acre Elcon Parcel on KIPC
Falls Township, Bucks County County, Pennsylvania

Dear Ms. Fitzpatrick:

Conestoga-Rovers & Associates, Inc. (CRA) was retained by IES Engineers to conduct a wetland delineation on a 33-acre parcel (Site) on the Keystone Industrial Port Complex (KIPC) property located in Falls Township, Bucks County, Pennsylvania. Historically, the Site was part of the U.S. Steel Fairless Works property and was used for industrial steel manufacturing purposes. ELCON is currently proposing to redevelop the site for industrial purposes. The Site is generally located west of Dean Sievers Place and east of Steel Road South.

This report discusses the wetland delineation methodology and provides the results of CRA's field investigation. It includes copies of the United States Geologic Survey (USGS) topographic map (Figure 1), a recent aerial photograph (Figure 2), the Natural Resources Conservation Service (NRCS) web soil survey map (Figure 3), and the National Wetland Inventory (NWI) map each showing the location of the Site. The surveyed limits of the wetlands identified within the project area are shown on the Wetland Location Plan provided in Appendix A. Completed copies of the U.S. Army Corps of Engineers (COE) data forms referenced in the *Regional Supplement to the COE 1987 Wetlands Delineation Manual: Atlantic and Gulf Coast Plain Region* are provided in Appendix B. Appendix C contains color photographs of the wetlands identified during the delineation, as well as typical uplands identified on the Site.

## 1.0 REGULATORY FRAMEWORK AND WETLAND DELINEATION METHODOLOGY

In Pennsylvania, wetlands and waterways are regulated at the Federal level by the U.S. Army Corps of Engineers under Section 404 of the Clean Water Act. Wetlands and waterways are regulated at the state level by the Pennsylvania Department of Environmental Protection (PADEP) under PA Chapter 105.

The wetland delineation for the Site was conducted on June 25, 2014 using the Routine Onsite Determination Method in the *Corps 1987 Wetland Delineation Manual* and *Regional Supplement to the COE Wetland Delineation Manual: Atlantic and Gulf Coastal Plain Region*. According to this methodology, wetlands are identified by the presence of three parameters: the dominance of

Equal
Employment Opportunity
Employer

hydrophytic vegetation, the presence of hydric soils, and positive indicators of wetland hydrology. Typically, all three parameters must be present for an area to be considered jurisdictional wetlands. However, in areas where one or more of the wetland parameters have been significantly disturbed (e.g., mowed lawn areas, agricultural fields, etc.), the remaining parameters and best professional judgment were used to delineate the extent of jurisdictional wetlands.

Secondary sources of data for the Site, including the USGS topographic map, aerial photograph, NRCS soil survey, and NWI were reviewed prior to conducting the field investigation. These secondary sources of data are often useful in identifying areas that may contain wetlands based on topography, drainage ways, vegetation, and soil type.

Following the review of the secondary sources of data, wetland scientists from CRA inspected the Site and delineated the wetland and waterway boundaries based on the Corps methods. The boundaries between wetlands and uplands were flagged in the field by CRA and surveyed by Gilmore and Associates.

## 2.0 REVIEW OF SECONDARY DATA

Figure 1 shows the location of the Site on a portion of the Trenton West, PA USGS topographic quadrangle. As shown on the USGS topographic map provided as Figure 1, the Site is 33 acres, relatively flat, and is located within a highly industrial area. A small water body is indicated along the western side of the Site.

An aerial photograph provided as Figure 2 shows that the Site is sparsely vegetated with scattered trees and scrub vegetation. The waterbody along the western Site boundary is clearly visible. The Site is currently characterized by patchy wooded areas, open areas where the ground is covered by slag, and areas of herbaceous vegetation.

As shown on the NRCS Web Soil Survey (Figure 3), Site contains two soil types including Naticoke-Hatboro silt loam (Na) and Urban land, 0 to 8 percent slopes (UfuB). Urban Land comprises the vast majority of the Site and is not listed as a hydric soil. Naticoke-Hatboro silt loam is associated with the openwater boundary along the western boundary of the Site and is listed as hydric soil.

The NWI Map (Figure 4) identifies palustrine unconsolidated bottom openwater along the western Site boundary. No other wetlands or waterbodies are indicated on the NWI map.

## 3.0 RESULTS OF WETLAND DELINEATION

CRA delineated four (4) wetland areas on the Site identified as Area A, B, C, and D on the site plan in Appendix A. Each delineated area is discussed below.

### 3.1 AREAS A and C

Areas A is a 4.294 acre palustrine unconsolidated bottom (PUB) openwater with palustrine emergent (PEM1) littoral fringes. The openwater portions of Area A range from about a foot deep to a maximum of approximately 4 feet deep. The emergent littoral fringes are dominated by black willow (*Salix nigra*) saplings, poison ivy (*Toxicodendron radicans*), common reed (*Phragmites australis*), and marsh rosemallow (*Hibiscus moscheutos*). The soil from 0 to 12 inches was observed to be black (10YR 2/1) muck. Indicators of wetland hydrology included standing water and saturated soils throughout. Area A drains north through a 72-inch diameter reinforced concrete pipe to a ditch that flows north along Steel Road South. Area C is a short segment of the ditch along Steel Road South and totals 0.018. The ditch ultimately drains to Biles Creek northeast of the Site.

These wetlands are documented on Data Form 5 in Appendix B and in the color photographs provided in Appendix C.

### 3.2 AREA B

Area B is a 0.040 acre palustrine forested wetland located in an isolated sparsely vegetated topographic depression west of Area A. Area B was dominated by spice bush (Lindera benzoin). The soil was dark gray (10YR 4/1) with brown (7.5YR 4/6) concentrations. Blackened leaves were present and the soil was saturated at 12 inches.

This wetland is documented on Data Form 6 in Appendix B and in the color photographs provided in Appendix C.

### 3.2 AREA D

Area D is a 0.414-acre palustrine emergent wetland located north of the Ashland Rail easement along the northern property boundary. Area D is a historically disturbed area. Area D is dominated by common reed. The soil from 0 to 14 inches was dark grayish brown (10YR 4/2) with brown (7.5YR 5/4) concentrations. The soil was saturated at near surface at the time of the field investigation.

These wetlands are documented on Data Form 8 in Appendix B and in the color photographs provided in Appendix C.

### 3.3 UPLANDS

Almost all of the uplands on the Site are previously disturbed industrial areas of varying plant community succession on variable fill soil. The majority of the surface soils contain a large percentage of steel slag. The uplands are dominated by eastern cottonwood (*Populus deltoides*), box elder (*Acer*

*negundo*), black locust (*Robinia pseudoacacia*), staghorn sumac (*Rhus typhina*), mugwort (*Artemisia vulgaris*), spotted knapweed (*Centaurea maculosa*), and yellow sweet clover (*Melilotus officinalis*). The soils in the uplands are highly variable. Typical soil in the uplands was generally monochromatic yellowish brown (10YR 5/4) loamy sand with varying amounts of gravel and slag. No indicators of wetland hydrology were observed in the upland portions of the Site.

The uplands on the Site are documented on Data Forms 1-4 and 7 in Appendix B and in the color photographs provided in Appendix C.

## 4.0 SUMMARY & RECOMMENDATIONS

The majority of the Site consists of industrial, disturbed uplands. CRA identified and delineated four areas on site that contain wetlands designated as Areas A, B, C, and D. Areas A and C are hydrologically connected to Biles Creek which is a traditionally navigable waterway. Area B is hydrologically isolated from other wetlands on the Site but is adjacent to Area A which flows to Biles Creek. Area D is adjacent to Area C and the downstream segments of the ditch along Steel Road South. It is CRA's opinion that these areas are likely jurisdictional wetlands under Section 404 of the Clean Water Act and under PA Chapter 105. If any activities are proposed which would encroach upon these wetlands, permits from the U.S. Army Corps of Engineers and / or PADEP will likely be required.

CRA recommends that a Jurisdictional Determination be obtained from the U.S. Army Corps of Engineers, Philadelphia District in order to verify CRA's delineation and the jurisdictional status of these wetlands. If you have any questions or require additional information, please call me at (610) 321-1800 ext. 11.

Yours truly,

CONESTOGA ROVERS & ASSOCIATES

Scott E. Bush, P.W.S.
Senior Ecologist

SEB/smk/1
Encl.

FIGURES

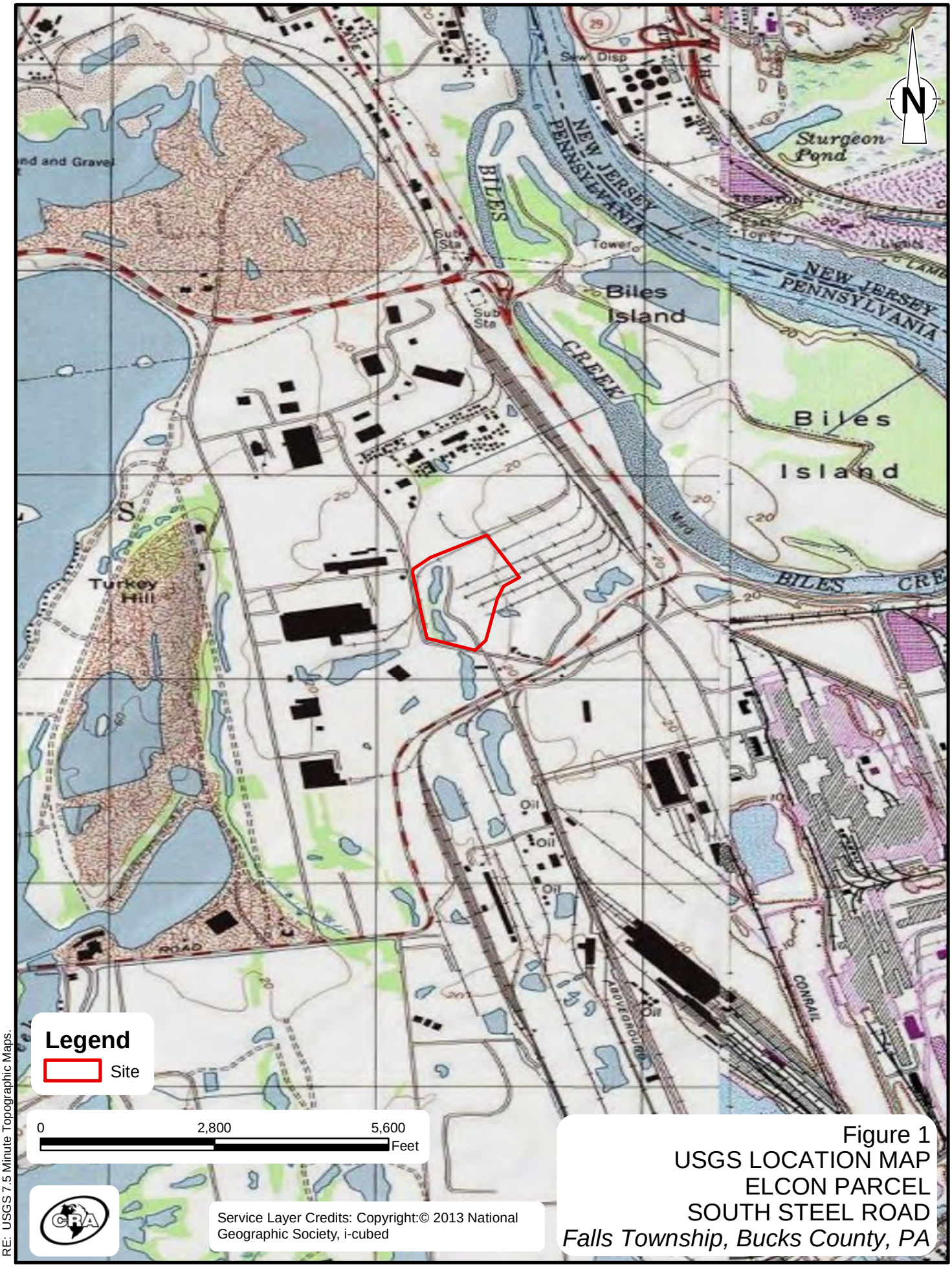


Figure 1
USGS LOCATION MAP
ELCON PARCEL
SOUTH STEEL ROAD
*Falls Township, Bucks County, PA*

RE: USGS 7.5 Minute Topographic Maps.

085945-00(000)CA-PH001 8/14/2014

Figure 2
AERIAL LOCATION MAP
ELCON PARCEL
SOUTH STEEL ROAD
*Falls Township, Bucks County, PA*

RE: Aerial Location Map.

085945-00(000)CA-PH001 8/14/2014

Figure 3
SOILS MAP
ELCON PARCEL
SOUTH STEEL ROAD
*Falls Township, Bucks County, PA*

RE: Soils Map.

085945-00(000)CA-PH001 8/14/2014

Figure 4
NWI MAP
ELCON PARCEL
SOUTH STEEL ROAD
*Falls Township, Bucks County, PA*

RE: NWI Map.

085945-00(000)CA-PH001 8/14/2014

APPENDIX A

SURVEYED SITE PLAN

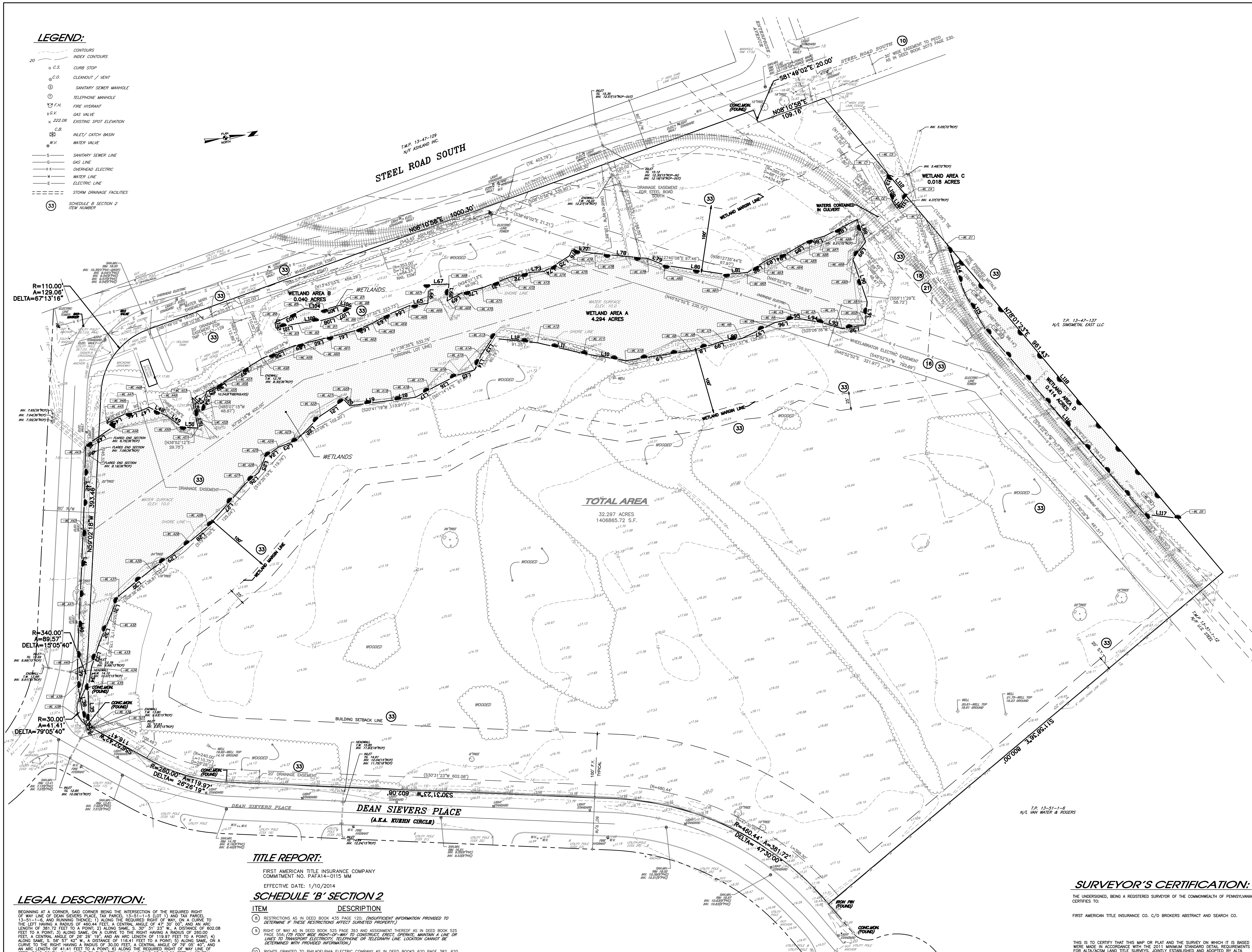


| WETLAND LINE TABLE | | |
|---|---|---|
| LINE | LENGTH | BEARING |
| WETLAND AREA A | | |
| L8 | 33.01 | S07°31'12"E |
| L9 | 103.06 | S00°21'50"E |
| L10 | 66.58 | S17°57'27"W |
| L11 | 73.43 | S21°38'57"W |
| L12 | 70.19 | S14°01'57"W |
| L13 | 30.80 | S47°17'41"E |
| L14 | 25.82 | S57°31'48"E |
| L15 | 29.26 | S08°44'35"E |
| L16 | 47.56 | S18°59'21"E |
| L17 | 24.20 | S21°09'25"E |
| L18 | 37.53 | S01°43'50"W |
| L19 | 65.65 | S00°41'06"W |
| L20 | 12.59 | S54°21'12"W |
| L21 | 44.20 | S25°32'42"E |
| L22 | 54.81 | S36°52'37"E |
| L23 | 28.76 | S11°43'56"E |
| L24 | 25.22 | S28°09'25"E |
| L25 | 25.71 | S59°08'30"E |
| L26 | 29.09 | S32°01'22"E |
| L27 | 86.37 | S40°37'17"E |
| L28 | 38.73 | S31°43'11"E |
| L29 | 72.02 | S27°23'51"E |
| L30 | 65.34 | S30°31'59"E |
| L31 | 39.20 | S59°03'04"E |
| L32 | 42.90 | S59°36'48"E |
| L33 | 35.99 | S64°15'19"E |
| L34 | 31.78 | S72°01'41"E |
| L35 | 63.32 | S83°22'39"E |
| L36 | 4.22 | S49°16'52"E |
| L37 | 16.37 | S75°59'30"W |
| L38 | 57.29 | S88°38'24"W |
| L39 | 39.64 | N82°11'01"W |
| L40 | 97.28 | N79°04'30"W |
| L41 | 107.71 | N78°59'13"W |
| L42 | 126.04 | N79°59'19"W |
| L43 | 50.97 | N25°44'06"W |
| L44 | 11.62 | S43°46'23"W |
| L45 | 30.97 | N17°42'54"W |
| L46 | 22.61 | N01°40'16"W |
| L47 | 16.75 | N14°33'54"W |
| L48 | 32.61 | N34°13'37"E |
| L49 | 25.62 | N46°18'02"E |
| L50 | 26.81 | N12°58'18"E |
| L51 | 15.63 | S87°20'25"W |
| L52 | 32.80 | S86°48'20"W |
| L53 | 22.03 | N52°08'47"E |
| L54 | 25.11 | N65°36'12"W |
| L55 | 19.67 | N20°00'59"W |
| L56 | 9.08 | N22°16'49"W |
| L57 | 73.33 | N23°03'03"W |
| L58 | 51.57 | N13°07'18"W |
| L59 | 18.45 | N04°57'51"W |
| L60 | 40.22 | N05°48'21"W |
| L61 | 37.62 | N05°29'18"W |
| L62 | 30.42 | N14°18'41"W |
| L63 | 27.59 | N20°19'17"W |
| L64 | 36.26 | N14°32'02"W |
| L65 | 28.88 | N01°06'46"E |
| L66 | 28.98 | N79°35'21"W |
| L67 | 31.65 | N06°53'30"E |
| L68 | 26.28 | S75°06'04"E |
| L69 | 25.87 | N20°13'10"W |
| L70 | 33.11 | N05°14'52"W |
| L71 | 40.66 | N13°14'29"W |
| L72 | 36.17 | N06°10'24"W |
| L73 | 22.60 | N05°16'02"E |
| L74 | 19.15 | N21°52'28"W |
| L75 | 27.40 | N24°12'33"W |
| L76 | 10.61 | N59°37'44"W |
| L77 | 35.84 | N16°07'11"E |
| L78 | 82.11 | N13°55'41"E |
| L79 | 29.31 | N29°54'57"E |
| L80 | 94.10 | N16°53'56"E |
| L81 | 34.81 | N03°42'19"E |
| L82 | 31.89 | N24°13'22"W |
| L83 | 16.91 | N17°50'26"W |
| L84 | 19.10 | N04°55'51"W |
| L85 | 40.16 | N21°51'26"W |
| L86 | 25.36 | N07°58'21"W |
| L87 | 56.56 | N18°37'52"W |
| L88 | 36.95 | N77°06'52"E |
| L89 | 33.84 | S45°43'17"E |
| L90 | 69.33 | N79°41'12"E |
| L91 | 36.18 | S77°12'00"E |
| L92 | 36.48 | S00°49'32"E |
| L93 | 30.90 | S25°05'59"W |
| L94 | 34.24 | S19°02'42"W |
| L95 | 18.83 | S05°19'06"W |
| L96 | 22.11 | S03°19'39"E |
| L97 | 58.55 | S17°05'54"E |
| L98 | 26.89 | S02°05'09"W |
| L99 | 19.92 | S10°24'28"E |
| WETLAND AREA B | | |
| L100 | 37.23 | S00°46'18"W |
| L101 | 35.77 | S03°09'10"E |
| L102 | 8.47 | N88°35'36"W |
| L103 | 51.05 | N16°39'54"W |
| L104 | 29.97 | N11°17'24"E |
| L105 | 24.69 | N07°27'05"W |
| L106 | 18.10 | N25°28'42"E |
| L107 | 27.35 | S18°40'38"E |
| L108 | 20.62 | S06°45'43"E |
| WETLAND AREA C | | |
| L109 | 35.33 | N73°39'14"E |
| L110 | 9.06 | N62°04'10"E |
| L111 | 23.90 | N45°55'09"W |
| L112 | 42.74 | S58°20'22"W |
| L113 | 14.27 | S54°21'15"E |
| WETLAND AREA D | | |
| L114 | 80.99 | N78°44'32"E |
| L115 | 62.62 | N68°25'27"E |
| L116 | 380.68 | N57°46'25"E |
| L117 | 51.83 | N15°10'14"E |
| L118 | 556.03 | S58°20'22"W |

## LEGAL DESCRIPTION:

BEGINNING AT A CORNER, SAID CORNER BEING THE INTERSECTION OF THE REQUIRED RIGHT OF WAY LINE OF DEAN SIEVERS PLACE, TAX PARCEL 13–51–1–5 (LOT 1) AND TAX PARCEL 13–51–1–6, AND RUNNING THENCE; 1) ALONG THE REQUIRED RIGHT OF WAY, ON A CURVE TO THE LEFT HAVING A RADIUS OF 460.44 FEET, A CENTRAL ANGLE OF 47° 30' 00", AND AN ARC LENGTH OF 381.72 FEET TO A POINT; 2) ALONG SAME, S. 30°' 31' 23" W., A DISTANCE OF 602.08 FEET TO A POINT; 3) ALONG SAME, ON A CURVE TO THE RIGHT HAVING A RADIUS OF 260.00 FEET, A CENTRAL ANGLE OF 26° 26' 19", AND AN ARC LENGTH OF 119.97 FEET TO A POINT; 4) ALONG SAME, S. 56° 57' 42" W., A DISTANCE OF 116.41 FEET TO A POINT; 5) ALONG SAME, ON A CURVE TO THE RIGHT HAVING A RADIUS OF 30.00 FEET, A CENTRAL ANGLE OF 79° 05' 40", AND AN ARC LENGTH OF 41.41 FEET TO A POINT; 6) ALONG THE REQUIRED RIGHT OF WAY LINE OF STEEL ROAD SOUTH, ON A CURVE TO THE LEFT HAVING A RADIUS OF 340.00 FEET, A CENTRAL ANGLE OF 15° 05' 40", AND AN ARC LENGTH OF 89.57 FEET TO A POINT; 7) ALONG SAME, N. 59° 02' 18" W., A DISTANCE OF 393.46 FEET TO A POINT; 8) ALONG SAME, ON A CURVE TO THE RIGHT HAVING A RADIUS OF 110.00 FEET, A CENTRAL ANGLE OF 67° 13' 16", AND AN ARC LENGTH OF 129.06 FEET TO A POINT; 9) ALONG SAME, N. 08' 10' 58" E., A DISTANCE OF 1000.30 FEET TO A POINT; 10) ALONG SAME, S. 81° 49' 02" E., A DISTANCE OF 20.00 FEET TO A POINT; 11) ALONG SAME, N. 08° 10' 58" E., A DISTANCE OF 109.16 FEET TO A POINT; 12) ALONG TAX PARCEL 13–47–137, N. 78° 01' 23" E., A DISTANCE OF 961.43 FEET TO A POINT; 13) ALONG TAX PARCEL 13–51–1–6, S. 11° 58' 36" E., A DISTANCE OF 800.00 FEET TO A CORNER, SAID CORNER BEING THE TRUE PLACE OF BEGINNING.

CONTAINING 32.297 ACRES, MORE OR LESS.

ONLY THOSE PLANS INCORPORATING THE RAISED PROFESSIONAL SEAL SHOULD BE CONSIDERED OFFICIAL AND RELIED UPON BY USER. THIS PLAN IS PREPARED SPECIFICALLY FOR THE CLIENT AND PROJECT DESIGNATED HEREON. MODIFICATION, REVISION, DUPLICATION OR USE WITHOUT THE CONSENT OF GILMORE & ASSOCIATES, INC. IS PROHIBITED.
© COPYRIGHT 2006 GILMORE & ASSOCIATES, INC. ALL RIGHTS RESERVED

## TITLE REPORT:

FIRST AMERICAN TITLE INSURANCE COMPANY
COMMITMENT NO. PAFA14–0115 MM

EFFECTIVE DATE: 1/10/2014

## SCHEDULE 'B' SECTION 2

| ITEM | DESCRIPTION |
|---|---|
| 8. | RESTRICTIONS AS IN DEED BOOK 435 PAGE 120; *(INSUFFICIENT INFORMATION PROVIDED TO DETERMINE IF THESE RESTRICTIONS AFFECT SURVEYED PROPERTY.)* |
| 9. | RIGHT OF WAY AS IN DEED BOOK 525 PAGE 393 AND ASSIGNMENT THEREOF AS IN DEED BOOK 525 PAGE 556; *(75 FOOT WIDE RIGHT–OF–WAY TO CONSTRUCT, ERECT, OPERATE, MAINTAIN A LINE OR LINES TO TRANSPORT ELECTRICITY, TELEPHONE OR TELEGRAPH LINE. LOCATION CANNOT BE DETERMINED WITH PROVIDED INFORMATION.)* |
| 10. | RIGHTS GRANTED TO PHILADELPHIA ELECTRIC COMPANY AS IN DEED BOOKS 620 PAGE 382, 620 PAGE 445, 620 PAGE 446, 1849 PAGE 46, 2073 PAGE 224, 2073 PAGE 230, 2088 PAGE 304, 2115 PAGE 1120, 2348 PAGE 1032 AND 2590 PAGE 781. *(DEED BOOK 2079 PAGE 224 IS A GAS LINE EASEMENT THROUGH LANDS OF US STEEL, INSUFFICIENT INFORMATION TO DETERMINE LOCATION. DEED BOOK 2073 PAGE 230 AFFECTS SUBJECT PROPERTY NEAR INTERSECTION OF ENTERPRISE AVENUE AND STEEL DRIVE SOUTH SHOWN ON PLAN. DEED BOOK 2590 PAGE 781 APPEARS TO BE A BLANKET EASEMENT FOR PHILADELPHIA ELECTRIC COMPANY TO CONSTRUCT, OPERATE AND MAINTAIN COMMUNICATIONS, GAS, AND ELECTRIC TRANSMISSION FACILITES TO FACILITIES OF USS REALTY MAY AFFECT SUBJECT PROPERTY.)* |
| 11. | RIGHTS AS IN DEED BOOK 936 PAGE 45. *(SURVEYED PROPERTY IS SUBJECT TO RIGHTS AS IN DEED BOOK 936 PAGE 45; NOT PLOTTABLE.)* |
| 13. | RIGHTS GRANTED TO THE BELL TELEPHONE COMPANY OF PENNSYLVANIA AS IN DEED BOOK 2593 PAGE 290. *(RIGHTS TO THE TELEPHONE COMPANY OF PENNSYLVANIA AS IN DEED BOOK 2593 PAGE 290 AFFECTS SUBJECT PROPERTY BLANKET IN NATURE.)* |
| 16. | RIGHTS OF WAY AGREEMENT AS IN LAND RECORD BOOK 695 PAGE 1859. *(RIGHT OF WAY AS IN LAND RECORD BOOK 695 PAGE 1859 AFFECTS SURVEYED PROPERTY AND IS SHOWN).* |
| 18. | EASEMENT AGREEMENTS AS IN LAND RECORD BOOKS 1689 PAGE 1548, 1689 PAGE 1561, 1689 PAGE 1574, 1734 PAGE 2021, 1791 PAGE 2110, 2192 PAGE 1111 AND 4508 PAGE 1244. *(LAND RECORD BOOK 1689 PAGE 1548 AFFECTS SURVEYED PROPERTY IN THAT VAN WATERS & ROGERS HAS RIGHTS TO UTILIZE RAIL LINES THROUGH SURVEYED PROPERTY. LAND RECORD BOOK 1689 PAGE 1561 GRANTS RIGHTS TO VAN WATERS & ROGERS TO USE INDUSTRIAL PARK ROADWAYS.)* |
| 21. | RAIL ACCESS EASEMENT AGREEMENT AS IN LAND RECORD BOOK 2657 PAGE 23 AND EXHIBIT IN PLAN BOOK 308 PAGE 81. *(LAND RECORD BOOK 2657 PAGE 23 AND EXHIBIT IN PLAN BOOK 308 PAGE 81 GRANTS RIGHTS TO OWNER OF TAX PARCEL 13–47–129 TO USE RAILROAD AS SHOWN ON PLAN.)* |
| 23. | DEVELOPMENT GRANT AS IN LAND RECORD BOOK 2970 PAGE 1221. *(LAND RECORD BOOK 2970 PAGE 1221 GRANTS RIGHTS TO VERIZON TO CONSTRUCT AND MAINTAIN COMMUNICATION LINES AND STRUCTURES; CANNOT BE PLOTTED, BLANKET IN NATURE.)* |
| 33. | PLAN RECORDED IN PLAN BOOK 340 PAGE 61 SHOWS THE FOLLOWING: (A) BUILDING SET BACK LINES; (B) 20 FEET WIDE DRAINAGE EASEMENT; (C) 20 FEET WIDE DRAINAGE EASEMENT AND VARIABLE WIDTH DRAINAGE EASEMENT; (D) WETLANDS; (E) 15 FEET WIDE WATER MAIN EASEMENT; (F) WHEELABRATOR ELECTRIC EASEMENT; (G) ASHLAND RAIL EASEMENT; (H) PRE–FINISHED METALS RAIL EASEMENT; AND (I) NOTES. *(PLAN BOOK 340 PAGE 61; SURVEYED PROPERTY IS SUBJECT TO LISTED ITEM AS SHOWN ON PLAN. SEE PLAN REFERECE No. 1))* |

## GENERAL NOTES:

1. THE BOUNDARY AND TOPOGRAPHY AS SHOWN ARE BASED ON A FIELD SURVEY PERFORMED BY GILMORE & ASSOCIATES INC. IN MARCH OF 2014.
2. DESIGNATIONS OF EXISTING UNDERGROUND UTILITIES/FACILITIES SHOWN HEREON HAVE BEEN DEVELOPED FROM RECORDS, FIELD MARKOUTS BY UTILITY OWNERS, AND/OR ABOVE GROUND OBSERVATION OF THE SITE. NO EXCAVATIONS WERE PERFORMED IN PREPARATION OF THESE DRAWINGS; THEREFORE ALL UTILITIES SHOWN SHOULD BE CONSIDERED APPROXIMATE IN LOCATION, DEPTH, AND SIZE. THE POTENTIAL EXISTS FOR OTHER UNDERGROUND UTILITIES/ FACILITIES TO BE PRESENT WHICH ARE NOT SHOWN ON THESE DRAWINGS. ONLY THE VISIBLE LOCATIONS OF UNDERGROUND UTILITIES/FACILITIES AT THE TIME OF FIELD SURVEY SHALL BE CONSIDERED TRUE AND ACCURATE. COMPLETENESS OR ACCURACY OF UNDERGROUND UTILITIES/FACILITIES ARE NOT GUARANTEED BY GILMORE & ASSOCIATES INC.
3. ALL CONTRACTORS WORKING ON THIS PROJECT SHALL VERIFY LOCATION AND DEPTH OF ALL UNDERGROUND UTILITIES/FACILITIES PRIOR TO THE START OF WORK AND SHALL COMPLY WITH THE REQUIREMENTS OF P.L. 852, NO. 287 DECEMBER 10, 1974 AS LAST AMENDED ON OCTOBER 9, 2008, PENNSYLVANIA ACT 121. GILMORE AND ASSOCIATES INC. HAS OBTAINED PA–ONE CALL SERIAL NUMBERS 20140340626 & 20140340618 FOR DESIGN PURPOSES ONLY.
4. VERTICAL DATUM IS NAVD88 AND WAS ESTABLISHED BY GLOBAL POSITIONING SYSTEM (GPS) WITH OBSERVATIONS REFERENCED TO THE TOPCON TOPSURV GPS BASE STATION NETWORK.
5. THE WETLANDS WERE FLAGGED BY SCOTT E. BUSH, PWS CONESTOGA–ROVERS & ASSOCIATES, INC. AND LOCATED BY GILMORE & ASSOCIATES, INC. ON JUNE 30, 2014.

## PLAN REFERENCE:

1. LOT 1 COMBINED PLAN AND EASEMENT PLAN PREPARED FOR USS REAL ESTATE ONE NEW FAIRLESS HILLS DRIVE MORRISVILLE, PA. SHEET 2 OF 3 PREPARED BY SHOWALTER AND ASSOCIATES DATED MARCH 29, 2006 AND LAST REVISED 01–26–14.

## SURVEYOR'S CERTIFICATION:

THE UNDERSIGNED, BEING A REGISTERED SURVEYOR OF THE COMMONWEALTH OF PENNSYLVANIA CERTIFIES TO:

FIRST AMERICAN TITLE INSURANCE CO. C/O BROKERS ABSTRACT AND SEARCH CO.

THIS IS TO CERTIFY THAT THIS MAP OR PLAT AND THE SURVEY ON WHICH IT IS BASED WERE MADE IN ACCORDANCE WITH THE 2011 MINIMUM STANDARD DETAIL REQUIREMENTS FOR ALTA/ACSM LAND TITLE SURVEYS, JOINTLY ESTABLISHED AND ADOPTED BY ALTA AND NSPS, AND INCLUDES ITEMS 2, 4, 5, 7(a), 7(b)(1), 8, 9, 11(a), 13, 14, 16, AND 18 OF TABLE A THEREOF. THE FIELD WORK WAS COMPLETED IN MARCH OF 2014.

DATE

STANLEY J. KLUSKIEWICZ, PLS
PA. LICENSE NO. SU031253E

PENNSYLVANIA ONE CALL SYSTEM, INC.
925 Irwin Run Road
West Mifflin, Pennsylvania
15122 – 1078

PENNSYLVANIA ONE CALL SYSTEM, INC. 1–800–242–1776 STOP–CALL BEFORE YOU DIG!

BEFORE YOU DIG ANYWHERE IN PENNSYLVANIA! CALL 1–800–242–1776
NON–MEMBERS MUST BE CONTACTED DIRECTLY
PA LAW REQUIRES THREE WORKING DAYS NOTICE TO UTILITIES BEFORE YOU EXCAVATE, DRILL, BLAST OR DEMOLISH

| REV. | DESCRIPTION | DATE | BY |
|---|---|---|---|
| 3 | REVISED PER USACOE SITE VISIT | 11–14–14 | JJH |
| 2 | REVISED PER ADDITIONAL WETLANDS DELINEATION | 8–20–14 | JEG |
| 1 | REVISED PER NEW WETLANDS DELINEATION | 7–02–14 | DL |

**APPLICANT:**
ELCON RECYCLING SERVICES, LLC
P.O. BOX 1428
HAIFA, ISREAL 31013

**MUNICIPAL FILE NO.:** –

**TAX MAP PARCEL NO.:** 13–51–1–5

TOTAL AREA: 32.297 AC. | TOTAL LOTS: 1
DATE: 3–28–14 | SCALE: 1"= 50'

# ALTA/ACSM LAND TITLE SURVEY

## *ELCON RECYCLING*

FALLS TOWNSHIP, BUCKS COUNTY, PENNSYLVANIA

**GILMORE & ASSOCIATES, INC.**
ENGINEERING & CONSULTING SERVICES
350 EAST BUTLER AVENUE NEW BRITAIN, PA 18901-5106 • (215) 345-4330 • www.gilmore-assoc.com

SCALE 50 0 50 100 IN FEET

DESIGNED BY: JEG | DRAWN BY: DL | CHECKED BY: SJK

JOB NO.: 1207083
SHEET NO.: 1 OF 1

# APPENDIX B

# COMPLETED DATA FORMS

ELCON PARCEL

Google earth

feet 2000

meters 600

DATA POINT LOCATION MAP

## WETLAND DETERMINATION DATA FORM – Atlantic and Gulf Coastal Plain Region

Project/Site: Elcon City/County: Bucks Sampling Date: 6/25/2014

Applicant/Owner: Elcon State: PA Sampling Point: DP 1

Investigator(s): Scott Bush, PWS Section, Township, Range: _____

Landform (hillslope, terrace, etc.): Terrace Local relief (concave, convex, none): Flat Slope (%): 0

Subregion (LRR or MLRA): 149A Lat: 40.168567 Long: 74.759944 Datum: WGS84

Soil Map Unit Name: UfuB - Urban land, 0 - 8% slopes NWI classification: UPL

Are climatic / hydrologic conditions on the site typical for this time of year? Yes ✓ No _____ (If no, explain in Remarks.)

Are Vegetation _____, Soil _____, or Hydrology _____ significantly disturbed? Are "Normal Circumstances" present? Yes ✓ No _____

Are Vegetation _____, Soil _____, or Hydrology _____ naturally problematic? (If needed, explain any answers in Remarks.)

### SUMMARY OF FINDINGS – Attach site map showing sampling point locations, transects, important features, etc.

| | | | |
|---|---|---|---|
| Hydrophytic Vegetation Present? | Yes _____ | No ✓ | **Is the Sampled Area within a Wetland?** Yes _____ No ✓ |
| Hydric Soil Present? | Yes _____ | No ✓ | |
| Wetland Hydrology Present? | Yes _____ | No ✓ | |

Remarks:

Industrial lands

### HYDROLOGY

**Wetland Hydrology Indicators:**

Primary Indicators (minimum of one is required; check all that apply)

- ___ Surface Water (A1)
- ___ High Water Table (A2)
- ___ Saturation (A3)
- ___ Water Marks (B1)
- ___ Sediment Deposits (B2)
- ___ Drift Deposits (B3)
- ___ Algal Mat or Crust (B4)
- ___ Iron Deposits (B5)
- ___ Inundation Visible on Aerial Imagery (B7)
- ___ Water-Stained Leaves (B9)
- ___ Aquatic Fauna (B13)
- ___ Marl Deposits (B15) **(LRR U)**
- ___ Hydrogen Sulfide Odor (C1)
- ___ Oxidized Rhizospheres on Living Roots (C3)
- ___ Presence of Reduced Iron (C4)
- ___ Recent Iron Reduction in Tilled Soils (C6)
- ___ Thin Muck Surface (C7)
- ___ Other (Explain in Remarks)

Secondary Indicators (minimum of two required)

- ___ Surface Soil Cracks (B6)
- ___ Sparsely Vegetated Concave Surface (B8)
- ___ Drainage Patterns (B10)
- ___ Moss Trim Lines (B16)
- ___ Dry-Season Water Table (C2)
- ___ Crayfish Burrows (C8)
- ___ Saturation Visible on Aerial Imagery (C9)
- ___ Geomorphic Position (D2)
- ___ Shallow Aquitard (D3)
- ___ FAC-Neutral Test (D5)

**Field Observations:**

| | | | |
|---|---|---|---|
| Surface Water Present? | Yes _____ | No _____ | Depth (inches): _____ |
| Water Table Present? | Yes _____ | No _____ | Depth (inches): _____ |
| Saturation Present? (includes capillary fringe) | Yes _____ | No _____ | Depth (inches): _____ |

**Wetland Hydrology Present?** Yes _____ No ✓

Describe Recorded Data (stream gauge, monitoring well, aerial photos, previous inspections), if available:

Remarks:

**VEGETATION –** Use scientific names of plants.

Sampling Point: DP 1

| Tree Stratum (Plot sizes: _____ ) | Absolute % Cover | Dominant Species? | Indicator Status |
|---|---|---|---|
| 1. | | | |
| 2. | | | |
| 3. | | | |
| 4. | | | |
| 5. | | | |
| 6. | | | |
| 7. | | | |
| | | = Total Cover | |
| **Sapling Stratum** ( _____ ) | | | |
| 1. | | | |
| 2. | | | |
| 3. | | | |
| 4. | | | |
| 5. | | | |
| 6. | | | |
| 7. | | | |
| | | = Total Cover | |
| **Shrub Stratum** ( _____ ) | | | |
| 1. | | | |
| 2. | | | |
| 3. | | | |
| 4. | | | |
| 5. | | | |
| 6. | | | |
| 7. | | | |
| | | = Total Cover | |
| **Herb Stratum** ( _____ ) | | | |
| 1. Poa pratensis | 50 | yes | FACU |
| 2. Centaurea stoebe | 15 | no | UPL |
| 3. Panicum virgatum | 10 | no | FAC |
| 4. Solidago altissima | 10 | no | FACU |
| 5. Trifolium repens | 10 | no | FACU |
| 6. Lolium perenne | 5 | no | FACU |
| 7. | | | |
| 8. | | | |
| 9. | | | |
| 10. | | | |
| 11. | | | |
| 12. | | | |
| | 100 | = Total Cover | |
| **Woody Vine Stratum** ( _____ ) | | | |
| 1. | | | |
| 2. | | | |
| 3. | | | |
| 4. | | | |
| 5. | | | |
| | | = Total Cover | |

**Dominance Test worksheet:**

Number of Dominant Species That Are OBL, FACW, or FAC: 0 (A)

Total Number of Dominant Species Across All Strata: 1 (B)

Percent of Dominant Species That Are OBL, FACW, or FAC: 0 (A/B)

**Prevalence Index worksheet:**

| Total % Cover of: | | Multiply by: |
|---|---|---|
| OBL species | | x 1 = |
| FACW species | | x 2 = |
| FAC species | | x 3 = |
| FACU species | | x 4 = |
| UPL species | | x 5 = |
| Column Totals: | (A) | (B) |

Prevalence Index = B/A = _____

**Hydrophytic Vegetation Indicators:**

___ Dominance Test is >50%

___ Prevalence Index is ≤3.0[1]

___ Problematic Hydrophytic Vegetation[1] (Explain)

[1]Indicators of hydric soil and wetland hydrology must be present.

Definitions of Vegetation Strata:

Tree – Woody plants, excluding woody vines, approximately 20 ft (6 m) or more in height and 3 in. (7.6 cm) or larger in diameter at breast height (DBH).

Sapling – Woody plants, excluding woody vines, approximately 20 ft (6 m) or more in height and less than 3 in. (7.6 cm) DBH.

Shrub – Woody plants, excluding woody vines, approximately 3 to 20 ft (1 to 6 m) in height.

Herb – All herbaceous (non-woody) plants, including herbaceous vines, regardless of size. Includes woody plants, except woody vines, less than approximately 3 ft (1 m) in height.

Woody vine – All woody vines, regardless of height.

**Hydrophytic Vegetation Present?** Yes _____ No ✓

Remarks: (If observed, list morphological adaptations below).

## SOIL

Sampling Point: DP 1

**Profile Description: (Describe to the depth needed to document the indicator or confirm the absence of indicators.)**

| Depth (inches) | Matrix Color (moist) | Matrix % | Redox Features Color (moist) | Redox % | Type[1] | Loc[2] | Texture | Remarks |
|---|---|---|---|---|---|---|---|---|
| 0-8 | 10YR 5/4 | | | | | | Loam | |
| 8-18 | 10YR 5/4 | | | | | | Loamy | with gravel |
| | | | | | | | | |
| | | | | | | | | |
| | | | | | | | | |
| | | | | | | | | |
| | | | | | | | | |

[1]Type: C=Concentration, D=Depletion, RM=Reduced Matrix, CS=Covered or Coated Sand Grains. [2]Location: PL=Pore Lining, M=Matrix.

**Hydric Soil Indicators:**

- ___ Histosol (A1)
- ___ Histic Epipedon (A2)
- ___ Black Histic (A3)
- ___ Hydrogen Sulfide (A4)
- ___ Stratified Layers (A5)
- ___ Organic Bodies (A6) **(LRR P, T, U)**
- ___ 5 cm Mucky Mineral (A7) **(LRR P, T, U)**
- ___ Muck Presence (A8) **(LRR U)**
- ___ 1 cm Muck (A9) **(LRR P, T)**
- ___ Depleted Below Dark Surface (A11)
- ___ Thick Dark Surface (A12)
- ___ Coast Prairie Redox (A16) **(MLRA 150A)**
- ___ Sandy Mucky Mineral (S1) **(LRR O, S)**
- ___ Sandy Gleyed Matrix (S4)
- ___ Sandy Redox (S5)
- ___ Stripped Matrix (S6)
- ___ Dark Surface (S7) **(LRR P, S, T, U)**
- ___ Polyvalue Below Surface (S8) **(LRR S, T, U)**
- ___ Thin Dark Surface (S9) **(LRR S, T, U)**
- ___ Loamy Mucky Mineral (F1) **(LRR O)**
- ___ Loamy Gleyed Matrix (F2)
- ___ Depleted Matrix (F3)
- ___ Redox Dark Surface (F6)
- ___ Depleted Dark Surface (F7)
- ___ Redox Depressions (F8)
- ___ Marl (F10) **(LRR U)**
- ___ Depleted Ochric (F11) **(MLRA 151)**
- ___ Iron-Manganese Masses (F12) **(LRR O, P, T)**
- ___ Umbric Surface (F13) **(LRR P, T, U)**
- ___ Delta Ochric (F17) **(MLRA 151)**
- ___ Reduced Vertic (F18) **(MLRA 150A, 150B)**
- ___ Piedmont Floodplain Soils (F19) **(MLRA 149A)**
- ___ Anomalous Bright Loamy Soils (F20) **(MLRA 149A, 153C, 153D)**

**Indicators for Problematic Hydric Soils[3]:**

- ___ 1 cm Muck (A9) **(LRR O)**
- ___ 2 cm Muck (A10) **(LRR S)**
- ___ Reduced Vertic (F18) **(outside MLRA 150A,B)**
- ___ Piedmont Floodplain Soils (F19) **(LRR P, S, T)**
- ___ Anomalous Bright Loamy Soils (F20) **(MLRA 153B)**
- ___ Red Parent Material (TF2)
- ___ Very Shallow Dark Surface (TF12) (LRR T, U)
- ___ Other (Explain in Remarks)

[3]Indicators of hydrophytic vegetation and wetland hydrology must be present.

**Restrictive Layer (if observed):**

Type: _____

Depth (inches): _____

**Hydric Soil Present?** Yes _____ No ✓

Remarks:

## WETLAND DETERMINATION DATA FORM – Atlantic and Gulf Coastal Plain Region

Project/Site: Elcon City/County: Bucks Sampling Date: 6/25/2014

Applicant/Owner: Elcon State: PA Sampling Point: DP 2

Investigator(s): Scott Bush, PWS Section, Township, Range: _____

Landform (hillslope, terrace, etc.): Terrace Local relief (concave, convex, none): Flat Slope (%): 0

Subregion (LRR or MLRA): 149A Lat: 40.169803 Long: 74.760530 Datum: WGS84

Soil Map Unit Name: UfuB - Urban land, 0 - 8% slopes NWI classification: UPL

Are climatic / hydrologic conditions on the site typical for this time of year? Yes ✓ No _____ (If no, explain in Remarks.)

Are Vegetation _____, Soil _____, or Hydrology _____ significantly disturbed? Are "Normal Circumstances" present? Yes ✓ No _____

Are Vegetation _____, Soil _____, or Hydrology _____ naturally problematic? (If needed, explain any answers in Remarks.)

### SUMMARY OF FINDINGS – Attach site map showing sampling point locations, transects, important features, etc.

| | | | |
|---|---|---|---|
| Hydrophytic Vegetation Present? | Yes _____ | No ✓ | **Is the Sampled Area within a Wetland?** Yes _____ No ✓ |
| Hydric Soil Present? | Yes _____ | No ✓ | |
| Wetland Hydrology Present? | Yes _____ | No ✓ | |

Remarks:

### HYDROLOGY

**Wetland Hydrology Indicators:**

Primary Indicators (minimum of one is required; check all that apply)

- ___ Surface Water (A1)
- ___ High Water Table (A2)
- ___ Saturation (A3)
- ___ Water Marks (B1)
- ___ Sediment Deposits (B2)
- ___ Drift Deposits (B3)
- ___ Algal Mat or Crust (B4)
- ___ Iron Deposits (B5)
- ___ Inundation Visible on Aerial Imagery (B7)
- ___ Water-Stained Leaves (B9)
- ___ Aquatic Fauna (B13)
- ___ Marl Deposits (B15) **(LRR U)**
- ___ Hydrogen Sulfide Odor (C1)
- ___ Oxidized Rhizospheres on Living Roots (C3)
- ___ Presence of Reduced Iron (C4)
- ___ Recent Iron Reduction in Tilled Soils (C6)
- ___ Thin Muck Surface (C7)
- ___ Other (Explain in Remarks)

Secondary Indicators (minimum of two required)

- ___ Surface Soil Cracks (B6)
- ___ Sparsely Vegetated Concave Surface (B8)
- ___ Drainage Patterns (B10)
- ___ Moss Trim Lines (B16)
- ___ Dry-Season Water Table (C2)
- ___ Crayfish Burrows (C8)
- ___ Saturation Visible on Aerial Imagery (C9)
- ___ Geomorphic Position (D2)
- ___ Shallow Aquitard (D3)
- ___ FAC-Neutral Test (D5)

**Field Observations:**

| | | | |
|---|---|---|---|
| Surface Water Present? | Yes _____ | No _____ | Depth (inches): _____ |
| Water Table Present? | Yes _____ | No _____ | Depth (inches): _____ |
| Saturation Present? (includes capillary fringe) | Yes _____ | No _____ | Depth (inches): _____ |

**Wetland Hydrology Present?** Yes _____ No ✓

Describe Recorded Data (stream gauge, monitoring well, aerial photos, previous inspections), if available:

Remarks:

**VEGETATION** – Use scientific names of plants.

Sampling Point: DP 2

| Tree Stratum (Plot sizes: _____ ) | Absolute % Cover | Dominant Species? | Indicator Status |
|---|---|---|---|
| 1. Populus deltoides | 10 | yes | FAC |
| 2. | | | |
| 3. | | | |
| 4. | | | |
| 5. | | | |
| 6. | | | |
| 7. | | | |
| | 10 | = Total Cover | |
| **Sapling Stratum** ( _____ ) | | | |
| 1. Lonicera tatarica | 5 | yes | FACU |
| 2. | | | |
| 3. | | | |
| 4. | | | |
| 5. | | | |
| 6. | | | |
| 7. | | | |
| | 5 | = Total Cover | |
| **Shrub Stratum** ( _____ ) | | | |
| 1. | | | |
| 2. | | | |
| 3. | | | |
| 4. | | | |
| 5. | | | |
| 6. | | | |
| 7. | | | |
| | | = Total Cover | |
| **Herb Stratum** ( _____ ) | | | |
| 1. Melilotus officinalis | 15 | yes | FACU |
| 2. Centaurea stoebe | 15 | yes | UPL |
| 3. Setaria pumila | 5 | no | FAC |
| 4. Eupatorium serotinum | 2 | no | FACU |
| 5. | | | |
| 6. | | | |
| 7. | | | |
| 8. | | | |
| 9. | | | |
| 10. | | | |
| 11. | | | |
| 12. | | | |
| | 37 | = Total Cover | |
| **Woody Vine Stratum** ( _____ ) | | | |
| 1. | | | |
| 2. | | | |
| 3. | | | |
| 4. | | | |
| 5. | | | |
| | | = Total Cover | |

**Dominance Test worksheet:**

Number of Dominant Species That Are OBL, FACW, or FAC: 1 (A)

Total Number of Dominant Species Across All Strata: 4 (B)

Percent of Dominant Species That Are OBL, FACW, or FAC: 25% (A/B)

**Prevalence Index worksheet:**

| Total % Cover of: | | Multiply by: | |
|---|---|---|---|
| OBL species | | x 1 = | |
| FACW species | | x 2 = | |
| FAC species | 10 | x 3 = | 30 |
| FACU species | 22 | x 4 = | 88 |
| UPL species | 15 | x 5 = | 75 |
| Column Totals: | 47 (A) | | 193 (B) |

Prevalence Index = B/A = 4.1

**Hydrophytic Vegetation Indicators:**

___ Dominance Test is >50%

___ Prevalence Index is ≤3.0[1]

___ Problematic Hydrophytic Vegetation[1] (Explain)

[1]Indicators of hydric soil and wetland hydrology must be present.

Definitions of Vegetation Strata:

Tree – Woody plants, excluding woody vines, approximately 20 ft (6 m) or more in height and 3 in. (7.6 cm) or larger in diameter at breast height (DBH).

Sapling – Woody plants, excluding woody vines, approximately 20 ft (6 m) or more in height and less than 3 in. (7.6 cm) DBH.

Shrub – Woody plants, excluding woody vines, approximately 3 to 20 ft (1 to 6 m) in height.

Herb – All herbaceous (non-woody) plants, including herbaceous vines, regardless of size. Includes woody plants, except woody vines, less than approximately 3 ft (1 m) in height.

Woody vine – All woody vines, regardless of height.

**Hydrophytic Vegetation Present?** Yes _____ No ✓

Remarks: (If observed, list morphological adaptations below).

## SOIL

Sampling Point: DP 2

**Profile Description: (Describe to the depth needed to document the indicator or confirm the absence of indicators.)**

| Depth (inches) | Matrix Color (moist) | Matrix % | Redox Features Color (moist) | Redox % | Type[1] | Loc[2] | Texture | Remarks |
|---|---|---|---|---|---|---|---|---|
| 0-18 | 10YR 5/2 | | | | | | Sandy | Sandy fill and slag |
| | | | | | | | | |
| | | | | | | | | |
| | | | | | | | | |
| | | | | | | | | |
| | | | | | | | | |
| | | | | | | | | |

[1]Type: C=Concentration, D=Depletion, RM=Reduced Matrix, CS=Covered or Coated Sand Grains. [2]Location: PL=Pore Lining, M=Matrix.

**Hydric Soil Indicators:**

- ___ Histosol (A1)
- ___ Histic Epipedon (A2)
- ___ Black Histic (A3)
- ___ Hydrogen Sulfide (A4)
- ___ Stratified Layers (A5)
- ___ Organic Bodies (A6) **(LRR P, T, U)**
- ___ 5 cm Mucky Mineral (A7) **(LRR P, T, U)**
- ___ Muck Presence (A8) **(LRR U)**
- ___ 1 cm Muck (A9) **(LRR P, T)**
- ___ Depleted Below Dark Surface (A11)
- ___ Thick Dark Surface (A12)
- ___ Coast Prairie Redox (A16) **(MLRA 150A)**
- ___ Sandy Mucky Mineral (S1) **(LRR O, S)**
- ___ Sandy Gleyed Matrix (S4)
- ___ Sandy Redox (S5)
- ___ Stripped Matrix (S6)
- ___ Dark Surface (S7) **(LRR P, S, T, U)**
- ___ Polyvalue Below Surface (S8) **(LRR S, T, U)**
- ___ Thin Dark Surface (S9) **(LRR S, T, U)**
- ___ Loamy Mucky Mineral (F1) **(LRR O)**
- ___ Loamy Gleyed Matrix (F2)
- ___ Depleted Matrix (F3)
- ___ Redox Dark Surface (F6)
- ___ Depleted Dark Surface (F7)
- ___ Redox Depressions (F8)
- ___ Marl (F10) **(LRR U)**
- ___ Depleted Ochric (F11) **(MLRA 151)**
- ___ Iron-Manganese Masses (F12) **(LRR O, P, T)**
- ___ Umbric Surface (F13) **(LRR P, T, U)**
- ___ Delta Ochric (F17) **(MLRA 151)**
- ___ Reduced Vertic (F18) **(MLRA 150A, 150B)**
- ___ Piedmont Floodplain Soils (F19) **(MLRA 149A)**
- ___ Anomalous Bright Loamy Soils (F20) **(MLRA 149A, 153C, 153D)**

**Indicators for Problematic Hydric Soils[3]:**

- ___ 1 cm Muck (A9) **(LRR O)**
- ___ 2 cm Muck (A10) **(LRR S)**
- ___ Reduced Vertic (F18) **(outside MLRA 150A,B)**
- ___ Piedmont Floodplain Soils (F19) **(LRR P, S, T)**
- ___ Anomalous Bright Loamy Soils (F20) **(MLRA 153B)**
- ___ Red Parent Material (TF2)
- ___ Very Shallow Dark Surface (TF12) (LRR T, U)
- ___ Other (Explain in Remarks)

[3]Indicators of hydrophytic vegetation and wetland hydrology must be present.

**Restrictive Layer (if observed):**

Type: _____

Depth (inches): _____

**Hydric Soil Present?** Yes _____ No ✓

Remarks:

## WETLAND DETERMINATION DATA FORM – Atlantic and Gulf Coastal Plain Region

Project/Site: Elcon City/County: Bucks Sampling Date: 6/25/2014

Applicant/Owner: Elcon State: PA Sampling Point: DP 3

Investigator(s): Scott Bush, PWS Section, Township, Range: _____

Landform (hillslope, terrace, etc.): Terrace Local relief (concave, convex, none): Flat Slope (%): 0

Subregion (LRR or MLRA): 149A Lat: 40.167322 Long: 74.762298 Datum: WGS84

Soil Map Unit Name: UfuB - Urban land, 0 - 8% slopes NWI classification: -

Are climatic / hydrologic conditions on the site typical for this time of year? Yes ✓ No _____ (If no, explain in Remarks.)

Are Vegetation _____, Soil _____, or Hydrology _____ significantly disturbed? Are "Normal Circumstances" present? Yes ✓ No _____

Are Vegetation _____, Soil _____, or Hydrology _____ naturally problematic? (If needed, explain any answers in Remarks.)

### SUMMARY OF FINDINGS – Attach site map showing sampling point locations, transects, important features, etc.

| | | | |
|---|---|---|---|
| Hydrophytic Vegetation Present? | Yes ✓ | No _____ | **Is the Sampled Area within a Wetland?** Yes _____ No ✓ |
| Hydric Soil Present? | Yes _____ | No ✓ | |
| Wetland Hydrology Present? | Yes _____ | No ✓ | |

Remarks:

### HYDROLOGY

**Wetland Hydrology Indicators:**

Primary Indicators (minimum of one is required; check all that apply)

- ___ Surface Water (A1)
- ___ High Water Table (A2)
- ___ Saturation (A3)
- ___ Water Marks (B1)
- ___ Sediment Deposits (B2)
- ___ Drift Deposits (B3)
- ___ Algal Mat or Crust (B4)
- ___ Iron Deposits (B5)
- ___ Inundation Visible on Aerial Imagery (B7)
- ___ Water-Stained Leaves (B9)
- ___ Aquatic Fauna (B13)
- ___ Marl Deposits (B15) **(LRR U)**
- ___ Hydrogen Sulfide Odor (C1)
- ___ Oxidized Rhizospheres on Living Roots (C3)
- ___ Presence of Reduced Iron (C4)
- ___ Recent Iron Reduction in Tilled Soils (C6)
- ___ Thin Muck Surface (C7)
- ___ Other (Explain in Remarks)

Secondary Indicators (minimum of two required)

- ___ Surface Soil Cracks (B6)
- ___ Sparsely Vegetated Concave Surface (B8)
- ___ Drainage Patterns (B10)
- ___ Moss Trim Lines (B16)
- ___ Dry-Season Water Table (C2)
- ___ Crayfish Burrows (C8)
- ___ Saturation Visible on Aerial Imagery (C9)
- ___ Geomorphic Position (D2)
- ___ Shallow Aquitard (D3)
- ___ FAC-Neutral Test (D5)

**Field Observations:**

| | | | |
|---|---|---|---|
| Surface Water Present? | Yes _____ | No _____ | Depth (inches): _____ |
| Water Table Present? | Yes _____ | No _____ | Depth (inches): _____ |
| Saturation Present? (includes capillary fringe) | Yes _____ | No _____ | Depth (inches): _____ |

**Wetland Hydrology Present?** Yes _____ No ✓

Describe Recorded Data (stream gauge, monitoring well, aerial photos, previous inspections), if available:

Remarks:

**VEGETATION** – Use scientific names of plants.

Sampling Point: DP 3

| Tree Stratum (Plot sizes: _____ ) | Absolute % Cover | Dominant Species? | Indicator Status |
|---|---|---|---|
| 1. Populus deltoides | 25 | yes | FAC |
| 2. Platanus occidentalis | 10 | yes | FACW |
| 3. Acer negundo | 10 | yes | FAC |
| 4. | | | |
| 5. | | | |
| 6. | | | |
| 7. | | | |
| | 45 | = Total Cover | |
| **Sapling Stratum** ( _____ ) | | | |
| 1. Elaeagnus autumnalis | 40 | yes | UPL |
| 2. Lonicera tatarica | 10 | no | FACU |
| 3. | | | |
| 4. | | | |
| 5. | | | |
| 6. | | | |
| 7. | | | |
| | 50 | = Total Cover | |
| **Shrub Stratum** ( _____ ) | | | |
| 1. | | | |
| 2. | | | |
| 3. | | | |
| 4. | | | |
| 5. | | | |
| 6. | | | |
| 7. | | | |
| | | = Total Cover | |
| **Herb Stratum** ( _____ ) | | | |
| 1. Lonicera japonica | 26 | yes | FACU |
| 2. Toxicodendron radicans | 25 | yes | FAC |
| 3. Solidago canadensis | 20 | no | FACU |
| 4. Apocynum cannabinum | 10 | no | FACU |
| 5. Galium aperine | 10 | no | UPL |
| 6. Parthenocissus quinquefolia | 10 | no | FACU |
| 7. | | | |
| 8. | | | |
| 9. | | | |
| 10. | | | |
| 11. | | | |
| 12. | | | |
| | 101 | = Total Cover | |
| **Woody Vine Stratum** ( _____ ) | | | |
| 1. | | | |
| 2. | | | |
| 3. | | | |
| 4. | | | |
| 5. | | | |
| | | = Total Cover | |

**Dominance Test worksheet:**

Number of Dominant Species That Are OBL, FACW, or FAC: 4 (A)

Total Number of Dominant Species Across All Strata: 6 (B)

Percent of Dominant Species That Are OBL, FACW, or FAC: 66.7% (A/B)

**Prevalence Index worksheet:**

| Total % Cover of: | | Multiply by: |
|---|---|---|
| OBL species | | x 1 = |
| FACW species | | x 2 = |
| FAC species | | x 3 = |
| FACU species | | x 4 = |
| UPL species | | x 5 = |
| Column Totals: | (A) | (B) |

Prevalence Index = B/A = _____

**Hydrophytic Vegetation Indicators:**

✓ Dominance Test is >50%

___ Prevalence Index is ≤3.0[1]

___ Problematic Hydrophytic Vegetation[1] (Explain)

[1]Indicators of hydric soil and wetland hydrology must be present.

Definitions of Vegetation Strata:

Tree – Woody plants, excluding woody vines, approximately 20 ft (6 m) or more in height and 3 in. (7.6 cm) or larger in diameter at breast height (DBH).

Sapling – Woody plants, excluding woody vines, approximately 20 ft (6 m) or more in height and less than 3 in. (7.6 cm) DBH.

Shrub – Woody plants, excluding woody vines, approximately 3 to 20 ft (1 to 6 m) in height.

Herb – All herbaceous (non-woody) plants, including herbaceous vines, regardless of size. Includes woody plants, except woody vines, less than approximately 3 ft (1 m) in height.

Woody vine – All woody vines, regardless of height.

**Hydrophytic Vegetation Present?** Yes ✓ No ___

Remarks: (If observed, list morphological adaptations below).

## SOIL

Sampling Point: DP 3

**Profile Description: (Describe to the depth needed to document the indicator or confirm the absence of indicators.)**

| Depth (inches) | Matrix Color (moist) | Matrix % | Redox Features Color (moist) | Redox % | Type[1] | Loc[2] | Texture | Remarks |
|---|---|---|---|---|---|---|---|---|
| 0-18 | | | | | | | Slag | All slag |
| | | | | | | | | |
| | | | | | | | | |
| | | | | | | | | |
| | | | | | | | | |
| | | | | | | | | |
| | | | | | | | | |

[1]Type: C=Concentration, D=Depletion, RM=Reduced Matrix, CS=Covered or Coated Sand Grains. [2]Location: PL=Pore Lining, M=Matrix.

**Hydric Soil Indicators:**

- ___ Histosol (A1)
- ___ Histic Epipedon (A2)
- ___ Black Histic (A3)
- ___ Hydrogen Sulfide (A4)
- ___ Stratified Layers (A5)
- ___ Organic Bodies (A6) **(LRR P, T, U)**
- ___ 5 cm Mucky Mineral (A7) **(LRR P, T, U)**
- ___ Muck Presence (A8) **(LRR U)**
- ___ 1 cm Muck (A9) **(LRR P, T)**
- ___ Depleted Below Dark Surface (A11)
- ___ Thick Dark Surface (A12)
- ___ Coast Prairie Redox (A16) **(MLRA 150A)**
- ___ Sandy Mucky Mineral (S1) **(LRR O, S)**
- ___ Sandy Gleyed Matrix (S4)
- ___ Sandy Redox (S5)
- ___ Stripped Matrix (S6)
- ___ Dark Surface (S7) **(LRR P, S, T, U)**
- ___ Polyvalue Below Surface (S8) **(LRR S, T, U)**
- ___ Thin Dark Surface (S9) **(LRR S, T, U)**
- ___ Loamy Mucky Mineral (F1) **(LRR O)**
- ___ Loamy Gleyed Matrix (F2)
- ___ Depleted Matrix (F3)
- ___ Redox Dark Surface (F6)
- ___ Depleted Dark Surface (F7)
- ___ Redox Depressions (F8)
- ___ Marl (F10) **(LRR U)**
- ___ Depleted Ochric (F11) **(MLRA 151)**
- ___ Iron-Manganese Masses (F12) **(LRR O, P, T)**
- ___ Umbric Surface (F13) **(LRR P, T, U)**
- ___ Delta Ochric (F17) **(MLRA 151)**
- ___ Reduced Vertic (F18) **(MLRA 150A, 150B)**
- ___ Piedmont Floodplain Soils (F19) **(MLRA 149A)**
- ___ Anomalous Bright Loamy Soils (F20) **(MLRA 149A, 153C, 153D)**

**Indicators for Problematic Hydric Soils[3]:**

- ___ 1 cm Muck (A9) **(LRR O)**
- ___ 2 cm Muck (A10) **(LRR S)**
- ___ Reduced Vertic (F18) **(outside MLRA 150A,B)**
- ___ Piedmont Floodplain Soils (F19) **(LRR P, S, T)**
- ___ Anomalous Bright Loamy Soils (F20) **(MLRA 153B)**
- ___ Red Parent Material (TF2)
- ___ Very Shallow Dark Surface (TF12) (LRR T, U)
- ___ Other (Explain in Remarks)

[3]Indicators of hydrophytic vegetation and wetland hydrology must be present.

**Restrictive Layer (if observed):**

Type: _____

Depth (inches): _____

**Hydric Soil Present?** Yes _____ No ✓

Remarks:

No actual soil present in the upper layer of ground at this location

## WETLAND DETERMINATION DATA FORM – Atlantic and Gulf Coastal Plain Region

Project/Site: Elcon City/County: Bucks Sampling Date: 6/25/2014

Applicant/Owner: Elcon State: PA Sampling Point: DP 4

Investigator(s): Scott Bush, PWS Section, Township, Range: _____

Landform (hillslope, terrace, etc.): Terrace Local relief (concave, convex, none): Flat Slope (%): 0

Subregion (LRR or MLRA): 149A Lat: 40.165631 Long: 74.762283 Datum: WGS84

Soil Map Unit Name: Na, Nanticoke-Hatboro silt loams NWI classification: UPL

Are climatic / hydrologic conditions on the site typical for this time of year? Yes ✓ No _____ (If no, explain in Remarks.)

Are Vegetation _____, Soil _____, or Hydrology _____ significantly disturbed? Are "Normal Circumstances" present? Yes ✓ No _____

Are Vegetation _____, Soil _____, or Hydrology _____ naturally problematic? (If needed, explain any answers in Remarks.)

### SUMMARY OF FINDINGS – Attach site map showing sampling point locations, transects, important features, etc.

| | | | |
|---|---|---|---|
| Hydrophytic Vegetation Present? | Yes _____ | No ✓ | **Is the Sampled Area within a Wetland?** Yes _____ No ✓ |
| Hydric Soil Present? | Yes _____ | No ✓ | |
| Wetland Hydrology Present? | Yes _____ | No ✓ | |

Remarks:

### HYDROLOGY

**Wetland Hydrology Indicators:**

Primary Indicators (minimum of one is required; check all that apply)

- ___ Surface Water (A1)
- ___ High Water Table (A2)
- ___ Saturation (A3)
- ___ Water Marks (B1)
- ___ Sediment Deposits (B2)
- ___ Drift Deposits (B3)
- ___ Algal Mat or Crust (B4)
- ___ Iron Deposits (B5)
- ___ Inundation Visible on Aerial Imagery (B7)
- ___ Water-Stained Leaves (B9)
- ___ Aquatic Fauna (B13)
- ___ Marl Deposits (B15) (LRR U)
- ___ Hydrogen Sulfide Odor (C1)
- ___ Oxidized Rhizospheres on Living Roots (C3)
- ___ Presence of Reduced Iron (C4)
- ___ Recent Iron Reduction in Tilled Soils (C6)
- ___ Thin Muck Surface (C7)
- ___ Other (Explain in Remarks)

Secondary Indicators (minimum of two required)

- ___ Surface Soil Cracks (B6)
- ___ Sparsely Vegetated Concave Surface (B8)
- ___ Drainage Patterns (B10)
- ___ Moss Trim Lines (B16)
- ___ Dry-Season Water Table (C2)
- ___ Crayfish Burrows (C8)
- ___ Saturation Visible on Aerial Imagery (C9)
- ___ Geomorphic Position (D2)
- ___ Shallow Aquitard (D3)
- ___ FAC-Neutral Test (D5)

**Field Observations:**

| | | | |
|---|---|---|---|
| Surface Water Present? | Yes _____ | No _____ | Depth (inches): _____ |
| Water Table Present? | Yes _____ | No _____ | Depth (inches): _____ |
| Saturation Present? (includes capillary fringe) | Yes _____ | No _____ | Depth (inches): _____ |

**Wetland Hydrology Present?** Yes _____ No ✓

Describe Recorded Data (stream gauge, monitoring well, aerial photos, previous inspections), if available:

Remarks:

**VEGETATION –** Use scientific names of plants.

Sampling Point: DP 4

| Tree Stratum (Plot sizes: _____ ) | Absolute % Cover | Dominant Species? | Indicator Status |
|---|---|---|---|
| 1. Ailanthus altissima | 20 | yes | FACU |
| 2. | | | |
| 3. | | | |
| 4. | | | |
| 5. | | | |
| 6. | | | |
| 7. | | | |
| | 20 | = Total Cover | |
| **Sapling Stratum** ( _____ ) | | | |
| 1. Ailanthus altissima | 30 | yes | FACU |
| 2. Morus rubra | 10 | yes | FACU |
| 3. | | | |
| 4. | | | |
| 5. | | | |
| 6. | | | |
| 7. | | | |
| | 40 | = Total Cover | |
| **Shrub Stratum** ( _____ ) | | | |
| 1. | | | |
| 2. | | | |
| 3. | | | |
| 4. | | | |
| 5. | | | |
| 6. | | | |
| 7. | | | |
| | | = Total Cover | |
| **Herb Stratum** ( _____ ) | | | |
| 1. Toxicodendron radicans | 40 | yes | FAC |
| 2. Medicago lupulina | 10 | no | UPL |
| 3. | | | |
| 4. | | | |
| 5. | | | |
| 6. | | | |
| 7. | | | |
| 8. | | | |
| 9. | | | |
| 10. | | | |
| 11. | | | |
| 12. | | | |
| | 50 | = Total Cover | |
| **Woody Vine Stratum** ( _____ ) | | | |
| 1. | | | |
| 2. | | | |
| 3. | | | |
| 4. | | | |
| 5. | | | |
| | | = Total Cover | |

**Dominance Test worksheet:**

Number of Dominant Species That Are OBL, FACW, or FAC: 1 (A)

Total Number of Dominant Species Across All Strata: 4 (B)

Percent of Dominant Species That Are OBL, FACW, or FAC: 25% (A/B)

**Prevalence Index worksheet:**

| Total % Cover of: | | Multiply by: | |
|---|---|---|---|
| OBL species | | x 1 = | |
| FACW species | | x 2 = | |
| FAC species | 40 | x 3 = | 120 |
| FACU species | 60 | x 4 = | 240 |
| UPL species | | x 5 = | |
| Column Totals: | 100 (A) | | 360 (B) |

Prevalence Index = B/A = 3.6

**Hydrophytic Vegetation Indicators:**

___ Dominance Test is >50%

___ Prevalence Index is ≤3.0[1]

___ Problematic Hydrophytic Vegetation[1] (Explain)

[1]Indicators of hydric soil and wetland hydrology must be present.

Definitions of Vegetation Strata:

Tree – Woody plants, excluding woody vines, approximately 20 ft (6 m) or more in height and 3 in. (7.6 cm) or larger in diameter at breast height (DBH).

Sapling – Woody plants, excluding woody vines, approximately 20 ft (6 m) or more in height and less than 3 in. (7.6 cm) DBH.

Shrub – Woody plants, excluding woody vines, approximately 3 to 20 ft (1 to 6 m) in height.

Herb – All herbaceous (non-woody) plants, including herbaceous vines, regardless of size. Includes woody plants, except woody vines, less than approximately 3 ft (1 m) in height.

Woody vine – All woody vines, regardless of height.

**Hydrophytic Vegetation Present?** Yes _____ No ✓

Remarks: (If observed, list morphological adaptations below).

## SOIL

Sampling Point: DP 4

**Profile Description: (Describe to the depth needed to document the indicator or confirm the absence of indicators.)**

| Depth (inches) | Matrix Color (moist) | Matrix % | Redox Features Color (moist) | Redox % | Type[1] | Loc[2] | Texture | Remarks |
|---|---|---|---|---|---|---|---|---|
| 0-10 | | | | | | | | Rip Rap |
| | | | | | | | | |
| | | | | | | | | |
| | | | | | | | | |
| | | | | | | | | |
| | | | | | | | | |
| | | | | | | | | |

[1]Type: C=Concentration, D=Depletion, RM=Reduced Matrix, CS=Covered or Coated Sand Grains. [2]Location: PL=Pore Lining, M=Matrix.

**Hydric Soil Indicators:**

- ___ Histosol (A1)
- ___ Histic Epipedon (A2)
- ___ Black Histic (A3)
- ___ Hydrogen Sulfide (A4)
- ___ Stratified Layers (A5)
- ___ Organic Bodies (A6) **(LRR P, T, U)**
- ___ 5 cm Mucky Mineral (A7) **(LRR P, T, U)**
- ___ Muck Presence (A8) **(LRR U)**
- ___ 1 cm Muck (A9) **(LRR P, T)**
- ___ Depleted Below Dark Surface (A11)
- ___ Thick Dark Surface (A12)
- ___ Coast Prairie Redox (A16) **(MLRA 150A)**
- ___ Sandy Mucky Mineral (S1) **(LRR O, S)**
- ___ Sandy Gleyed Matrix (S4)
- ___ Sandy Redox (S5)
- ___ Stripped Matrix (S6)
- ___ Dark Surface (S7) **(LRR P, S, T, U)**
- ___ Polyvalue Below Surface (S8) **(LRR S, T, U)**
- ___ Thin Dark Surface (S9) **(LRR S, T, U)**
- ___ Loamy Mucky Mineral (F1) **(LRR O)**
- ___ Loamy Gleyed Matrix (F2)
- ___ Depleted Matrix (F3)
- ___ Redox Dark Surface (F6)
- ___ Depleted Dark Surface (F7)
- ___ Redox Depressions (F8)
- ___ Marl (F10) **(LRR U)**
- ___ Depleted Ochric (F11) **(MLRA 151)**
- ___ Iron-Manganese Masses (F12) **(LRR O, P, T)**
- ___ Umbric Surface (F13) **(LRR P, T, U)**
- ___ Delta Ochric (F17) **(MLRA 151)**
- ___ Reduced Vertic (F18) **(MLRA 150A, 150B)**
- ___ Piedmont Floodplain Soils (F19) **(MLRA 149A)**
- ___ Anomalous Bright Loamy Soils (F20) **(MLRA 149A, 153C, 153D)**

**Indicators for Problematic Hydric Soils[3]:**

- ___ 1 cm Muck (A9) **(LRR O)**
- ___ 2 cm Muck (A10) **(LRR S)**
- ___ Reduced Vertic (F18) **(outside MLRA 150A,B)**
- ___ Piedmont Floodplain Soils (F19) **(LRR P, S, T)**
- ___ Anomalous Bright Loamy Soils (F20) **(MLRA 153B)**
- ___ Red Parent Material (TF2)
- ___ Very Shallow Dark Surface (TF12) (LRR T, U)
- ___ Other (Explain in Remarks)

[3]Indicators of hydrophytic vegetation and wetland hydrology must be present.

**Restrictive Layer (if observed):**

Type: _____

Depth (inches): _____

**Hydric Soil Present?** Yes _____ No ✓

Remarks:

Sample in the shoulder of Steel Road South

## WETLAND DETERMINATION DATA FORM – Atlantic and Gulf Coastal Plain Region

Project/Site: Elcon City/County: Bucks Sampling Date: 6/25/2014

Applicant/Owner: Elcon State: PA Sampling Point: DP 5

Investigator(s): Scott Bush, PWS Section, Township, Range: _____

Landform (hillslope, terrace, etc.): Terrace Local relief (concave, convex, none): Flat Slope (%): 0

Subregion (LRR or MLRA): 149A Lat: 40.165429 Long: 74.762283 Datum: WGS84

Soil Map Unit Name: Na, Nanticoke-Hatboro silt loams NWI classification: PUB

Are climatic / hydrologic conditions on the site typical for this time of year? Yes ✓ No _____ (If no, explain in Remarks.)

Are Vegetation _____, Soil _____, or Hydrology _____ significantly disturbed? Are "Normal Circumstances" present? Yes ✓ No _____

Are Vegetation _____, Soil _____, or Hydrology _____ naturally problematic? (If needed, explain any answers in Remarks.)

### SUMMARY OF FINDINGS – Attach site map showing sampling point locations, transects, important features, etc.

| | | |
|---|---|---|
| Hydrophytic Vegetation Present? | Yes ✓ No _____ | **Is the Sampled Area within a Wetland?** Yes ✓ No _____ |
| Hydric Soil Present? | Yes ✓ No _____ | |
| Wetland Hydrology Present? | Yes ✓ No _____ | |

Remarks:

### HYDROLOGY

**Wetland Hydrology Indicators:**

Primary Indicators (minimum of one is required; check all that apply)

- ✓ Surface Water (A1)
- ___ High Water Table (A2)
- ___ Saturation (A3)
- ___ Water Marks (B1)
- ___ Sediment Deposits (B2)
- ___ Drift Deposits (B3)
- ___ Algal Mat or Crust (B4)
- ___ Iron Deposits (B5)
- ___ Inundation Visible on Aerial Imagery (B7)
- ___ Water-Stained Leaves (B9)
- ___ Aquatic Fauna (B13)
- ___ Marl Deposits (B15) **(LRR U)**
- ___ Hydrogen Sulfide Odor (C1)
- ___ Oxidized Rhizospheres on Living Roots (C3)
- ___ Presence of Reduced Iron (C4)
- ___ Recent Iron Reduction in Tilled Soils (C6)
- ___ Thin Muck Surface (C7)
- ___ Other (Explain in Remarks)

Secondary Indicators (minimum of two required)

- ___ Surface Soil Cracks (B6)
- ___ Sparsely Vegetated Concave Surface (B8)
- ___ Drainage Patterns (B10)
- ___ Moss Trim Lines (B16)
- ___ Dry-Season Water Table (C2)
- ___ Crayfish Burrows (C8)
- ___ Saturation Visible on Aerial Imagery (C9)
- ___ Geomorphic Position (D2)
- ___ Shallow Aquitard (D3)
- ___ FAC-Neutral Test (D5)

**Field Observations:**

| | | | |
|---|---|---|---|
| Surface Water Present? | Yes ✓ | No _____ | Depth (inches): 6 |
| Water Table Present? | Yes _____ | No _____ | Depth (inches): _____ |
| Saturation Present? (includes capillary fringe) | Yes _____ | No _____ | Depth (inches): _____ |

**Wetland Hydrology Present?** Yes ✓ No _____

Describe Recorded Data (stream gauge, monitoring well, aerial photos, previous inspections), if available:

Remarks:

**VEGETATION** – Use scientific names of plants.

Sampling Point: DP 5

| Tree Stratum (Plot sizes: _____ ) | Absolute % Cover | Dominant Species? | Indicator Status |
|---|---|---|---|
| 1. Salix nigra | 20 | yes | OBL |
| 2. | | | |
| 3. | | | |
| 4. | | | |
| 5. | | | |
| 6. | | | |
| 7. | | | |
| | | = Total Cover | |
| **Sapling Stratum** ( _____ ) | | | |
| 1. Hibiscus moscheutos | 30 | yes | OBL |
| 2. | | | |
| 3. | | | |
| 4. | | | |
| 5. | | | |
| 6. | | | |
| 7. | | | |
| | | = Total Cover | |
| **Shrub Stratum** ( _____ ) | | | |
| 1. | | | |
| 2. | | | |
| 3. | | | |
| 4. | | | |
| 5. | | | |
| 6. | | | |
| 7. | | | |
| | | = Total Cover | |
| **Herb Stratum** ( _____ ) | | | |
| 1. Phragmites australis | 60 | yes | FACW |
| 2. | | | |
| 3. | | | |
| 4. | | | |
| 5. | | | |
| 6. | | | |
| 7. | | | |
| 8. | | | |
| 9. | | | |
| 10. | | | |
| 11. | | | |
| 12. | | | |
| | | = Total Cover | |
| **Woody Vine Stratum** ( _____ ) | | | |
| 1. | | | |
| 2. | | | |
| 3. | | | |
| 4. | | | |
| 5. | | | |
| | | = Total Cover | |

**Dominance Test worksheet:**

Number of Dominant Species That Are OBL, FACW, or FAC: 3 (A)

Total Number of Dominant Species Across All Strata: 3 (B)

Percent of Dominant Species That Are OBL, FACW, or FAC: 100% (A/B)

**Prevalence Index worksheet:**

| Total % Cover of: | | Multiply by: |
|---|---|---|
| OBL species | _____ | x 1 = _____ |
| FACW species | _____ | x 2 = _____ |
| FAC species | _____ | x 3 = _____ |
| FACU species | _____ | x 4 = _____ |
| UPL species | _____ | x 5 = _____ |
| Column Totals: | _____ (A) | _____ (B) |

Prevalence Index = B/A = _____

**Hydrophytic Vegetation Indicators:**

✓ Dominance Test is >50%

___ Prevalence Index is ≤3.0[1]

___ Problematic Hydrophytic Vegetation[1] (Explain)

[1]Indicators of hydric soil and wetland hydrology must be present.

Definitions of Vegetation Strata:

Tree – Woody plants, excluding woody vines, approximately 20 ft (6 m) or more in height and 3 in. (7.6 cm) or larger in diameter at breast height (DBH).

Sapling – Woody plants, excluding woody vines, approximately 20 ft (6 m) or more in height and less than 3 in. (7.6 cm) DBH.

Shrub – Woody plants, excluding woody vines, approximately 3 to 20 ft (1 to 6 m) in height.

Herb – All herbaceous (non-woody) plants, including herbaceous vines, regardless of size. Includes woody plants, except woody vines, less than approximately 3 ft (1 m) in height.

Woody vine – All woody vines, regardless of height.

**Hydrophytic Vegetation Present?** Yes ✓ No _____

Remarks: (If observed, list morphological adaptations below).

## SOIL

Sampling Point: DP 5

**Profile Description: (Describe to the depth needed to document the indicator or confirm the absence of indicators.)**

| Depth (inches) | Matrix Color (moist) | Matrix % | Redox Features Color (moist) | Redox % | Type[1] | Loc[2] | Texture | Remarks |
|---|---|---|---|---|---|---|---|---|
| 0-18 | 10YR 2/1 | | | | | | Muck | |
| | | | | | | | | |
| | | | | | | | | |
| | | | | | | | | |
| | | | | | | | | |
| | | | | | | | | |
| | | | | | | | | |

[1]Type: C=Concentration, D=Depletion, RM=Reduced Matrix, CS=Covered or Coated Sand Grains. [2]Location: PL=Pore Lining, M=Matrix.

**Hydric Soil Indicators:**

- ___ Histosol (A1)
- ___ Histic Epipedon (A2)
- ___ Black Histic (A3)
- ✓ Hydrogen Sulfide (A4)
- ___ Stratified Layers (A5)
- ___ Organic Bodies (A6) **(LRR P, T, U)**
- ___ 5 cm Mucky Mineral (A7) **(LRR P, T, U)**
- ✓ Muck Presence (A8) **(LRR U)**
- ___ 1 cm Muck (A9) **(LRR P, T)**
- ___ Depleted Below Dark Surface (A11)
- ✓ Thick Dark Surface (A12)
- ___ Coast Prairie Redox (A16) **(MLRA 150A)**
- ___ Sandy Mucky Mineral (S1) **(LRR O, S)**
- ___ Sandy Gleyed Matrix (S4)
- ___ Sandy Redox (S5)
- ___ Stripped Matrix (S6)
- ___ Dark Surface (S7) **(LRR P, S, T, U)**
- ___ Polyvalue Below Surface (S8) **(LRR S, T, U)**
- ___ Thin Dark Surface (S9) **(LRR S, T, U)**
- ___ Loamy Mucky Mineral (F1) **(LRR O)**
- ___ Loamy Gleyed Matrix (F2)
- ___ Depleted Matrix (F3)
- ___ Redox Dark Surface (F6)
- ___ Depleted Dark Surface (F7)
- ___ Redox Depressions (F8)
- ___ Mari (F10) **(LRR U)**
- ___ Depleted Ochric (F11) **(MLRA 151)**
- ___ Iron-Manganese Masses (F12) **(LRR O, P, T)**
- ___ Umbric Surface (F13) **(LRR P, T, U)**
- ___ Delta Ochric (F17) **(MLRA 151)**
- ___ Reduced Vertic (F18) **(MLRA 150A, 150B)**
- ___ Piedmont Floodplain Soils (F19) **(MLRA 149A)**
- ___ Anomalous Bright Loamy Soils (F20) **(MLRA 149A, 153C, 153D)**

**Indicators for Problematic Hydric Soils[3]:**

- ___ 1 cm Muck (A9) **(LRR O)**
- ___ 2 cm Muck (A10) **(LRR S)**
- ___ Reduced Vertic (F18) **(outside MLRA 150A,B)**
- ___ Piedmont Floodplain Soils (F19) **(LRR P, S, T)**
- ___ Anomalous Bright Loamy Soils (F20) **(MLRA 153B)**
- ___ Red Parent Material (TF2)
- ___ Very Shallow Dark Surface (TF12) (LRR T, U)
- ___ Other (Explain in Remarks)

[3]Indicators of hydrophytic vegetation and wetland hydrology must be present.

**Restrictive Layer (if observed):**

Type: _____

Depth (inches): _____

**Hydric Soil Present?** Yes ✓ No ___

Remarks:

## WETLAND DETERMINATION DATA FORM – Atlantic and Gulf Coastal Plain Region

Project/Site: Elcon City/County: Bucks Sampling Date: 6/25/2014

Applicant/Owner: Elcon State: PA Sampling Point: DP 6

Investigator(s): Scott Bush, PWS Section, Township, Range: _____

Landform (hillslope, terrace, etc.): Terrace Local relief (concave, convex, none): Flat Slope (%): 0

Subregion (LRR or MLRA): 149A Lat: 40.166593 Long: 74.762761 Datum: WGS84

Soil Map Unit Name: Na, Nanticoke-Hatboro silt loams NWI classification: -

Are climatic / hydrologic conditions on the site typical for this time of year? Yes ✓ No ___ (If no, explain in Remarks.)

Are Vegetation ___, Soil ___, or Hydrology ___ significantly disturbed? Are "Normal Circumstances" present? Yes ✓ No ___

Are Vegetation ___, Soil ___, or Hydrology ___ naturally problematic? (If needed, explain any answers in Remarks.)

### SUMMARY OF FINDINGS – Attach site map showing sampling point locations, transects, important features, etc.

| | | | |
|---|---|---|---|
| Hydrophytic Vegetation Present? | Yes ✓ | No ___ | **Is the Sampled Area within a Wetland?** Yes ✓ No ___ |
| Hydric Soil Present? | Yes ✓ | No ___ | |
| Wetland Hydrology Present? | Yes ✓ | No ___ | |

Remarks:

### HYDROLOGY

**Wetland Hydrology Indicators:**

Primary Indicators (minimum of one is required; check all that apply)

- ___ Surface Water (A1)
- ___ High Water Table (A2)
- ✓ Saturation (A3)
- ___ Water Marks (B1)
- ___ Sediment Deposits (B2)
- ___ Drift Deposits (B3)
- ___ Algal Mat or Crust (B4)
- ___ Iron Deposits (B5)
- ___ Inundation Visible on Aerial Imagery (B7)
- ✓ Water-Stained Leaves (B9)
- ___ Aquatic Fauna (B13)
- ___ Marl Deposits (B15) (LRR U)
- ___ Hydrogen Sulfide Odor (C1)
- ___ Oxidized Rhizospheres on Living Roots (C3)
- ___ Presence of Reduced Iron (C4)
- ___ Recent Iron Reduction in Tilled Soils (C6)
- ___ Thin Muck Surface (C7)
- ___ Other (Explain in Remarks)

Secondary Indicators (minimum of two required)

- ___ Surface Soil Cracks (B6)
- ✓ Sparsely Vegetated Concave Surface (B8)
- ___ Drainage Patterns (B10)
- ___ Moss Trim Lines (B16)
- ___ Dry-Season Water Table (C2)
- ___ Crayfish Burrows (C8)
- ___ Saturation Visible on Aerial Imagery (C9)
- ✓ Geomorphic Position (D2)
- ___ Shallow Aquitard (D3)
- ___ FAC-Neutral Test (D5)

**Field Observations:**

| | | | |
|---|---|---|---|
| Surface Water Present? | Yes ___ | No ✓ | Depth (inches): ___ |
| Water Table Present? | Yes ___ | No ✓ | Depth (inches): ___ |
| Saturation Present? (includes capillary fringe) | Yes ✓ | No ___ | Depth (inches): 12 |

**Wetland Hydrology Present?** Yes ✓ No ___

Describe Recorded Data (stream gauge, monitoring well, aerial photos, previous inspections), if available:

Remarks:

**VEGETATION** – Use scientific names of plants.

Sampling Point: DP 6

| Tree Stratum (Plot sizes: _____ ) | Absolute % Cover | Dominant Species? | Indicator Status |
|---|---|---|---|
| 1. | | | |
| 2. | | | |
| 3. | | | |
| 4. | | | |
| 5. | | | |
| 6. | | | |
| 7. | | | |
| | | = Total Cover | |
| **Sapling Stratum** ( _____ ) | | | |
| 1. Lindera benzoin | 80 | yes | FACW |
| 2. | | | |
| 3. | | | |
| 4. | | | |
| 5. | | | |
| 6. | | | |
| 7. | | | |
| | 80 | = Total Cover | |
| **Shrub Stratum** ( _____ ) | | | |
| 1. | | | |
| 2. | | | |
| 3. | | | |
| 4. | | | |
| 5. | | | |
| 6. | | | |
| 7. | | | |
| | | = Total Cover | |
| **Herb Stratum** ( _____ ) | | | |
| 1. Polygonum cuspidatum | 10 | yes | UPL |
| 2. | | | |
| 3. | | | |
| 4. | | | |
| 5. | | | |
| 6. | | | |
| 7. | | | |
| 8. | | | |
| 9. | | | |
| 10. | | | |
| 11. | | | |
| 12. | | | |
| | 10 | = Total Cover | |
| **Woody Vine Stratum** ( _____ ) | | | |
| 1. | | | |
| 2. | | | |
| 3. | | | |
| 4. | | | |
| 5. | | | |
| | | = Total Cover | |

**Dominance Test worksheet:**

Number of Dominant Species That Are OBL, FACW, or FAC: 1 (A)

Total Number of Dominant Species Across All Strata: 2 (B)

Percent of Dominant Species That Are OBL, FACW, or FAC: 50 (A/B)

**Prevalence Index worksheet:**

| Total % Cover of: | | Multiply by: |
|---|---|---|
| OBL species | 0 | x 1 = 0 |
| FACW species | 80 | x 2 = 160 |
| FAC species | 0 | x 3 = 0 |
| FACU species | 0 | x 4 = 0 |
| UPL species | 10 | x 5 = 50 |
| Column Totals: | 90 (A) | 210 (B) |

Prevalence Index = B/A = 2.33

**Hydrophytic Vegetation Indicators:**

___ Dominance Test is >50%

✓ Prevalence Index is ≤3.0[1]

___ Problematic Hydrophytic Vegetation[1] (Explain)

[1]Indicators of hydric soil and wetland hydrology must be present.

Definitions of Vegetation Strata:

Tree – Woody plants, excluding woody vines, approximately 20 ft (6 m) or more in height and 3 in. (7.6 cm) or larger in diameter at breast height (DBH).

Sapling – Woody plants, excluding woody vines, approximately 20 ft (6 m) or more in height and less than 3 in. (7.6 cm) DBH.

Shrub – Woody plants, excluding woody vines, approximately 3 to 20 ft (1 to 6 m) in height.

Herb – All herbaceous (non-woody) plants, including herbaceous vines, regardless of size. Includes woody plants, except woody vines, less than approximately 3 ft (1 m) in height.

Woody vine – All woody vines, regardless of height.

**Hydrophytic Vegetation Present?** Yes ✓ No _____

Remarks: (If observed, list morphological adaptations below).

## SOIL

Sampling Point: DP 6

**Profile Description: (Describe to the depth needed to document the indicator or confirm the absence of indicators.)**

| Depth (inches) | Matrix Color (moist) | Matrix % | Redox Features Color (moist) | Redox % | Type[1] | Loc[2] | Texture | Remarks |
|---|---|---|---|---|---|---|---|---|
| 0-8 | 10YR 4/2 | 98 | 10YR 4/6 | 2 | C | M | Loam | |
| 8-18 | 10YR 4/1 | 98 | 10YR 4/6 | 2 | C | M | Loam w | |

[1]Type: C=Concentration, D=Depletion, RM=Reduced Matrix, CS=Covered or Coated Sand Grains. [2]Location: PL=Pore Lining, M=Matrix.

**Hydric Soil Indicators:**

- ___ Histosol (A1)
- ___ Histic Epipedon (A2)
- ___ Black Histic (A3)
- ___ Hydrogen Sulfide (A4)
- ___ Stratified Layers (A5)
- ___ Organic Bodies (A6) **(LRR P, T, U)**
- ___ 5 cm Mucky Mineral (A7) **(LRR P, T, U)**
- ___ Muck Presence (A8) **(LRR U)**
- ___ 1 cm Muck (A9) **(LRR P, T)**
- ___ Depleted Below Dark Surface (A11)
- ___ Thick Dark Surface (A12)
- ___ Coast Prairie Redox (A16) **(MLRA 150A)**
- ___ Sandy Mucky Mineral (S1) **(LRR O, S)**
- ___ Sandy Gleyed Matrix (S4)
- ___ Sandy Redox (S5)
- ___ Stripped Matrix (S6)
- ___ Dark Surface (S7) **(LRR P, S, T, U)**
- ___ Polyvalue Below Surface (S8) **(LRR S, T, U)**
- ___ Thin Dark Surface (S9) **(LRR S, T, U)**
- ___ Loamy Mucky Mineral (F1) **(LRR O)**
- ___ Loamy Gleyed Matrix (F2)
- ✓ Depleted Matrix (F3)
- ___ Redox Dark Surface (F6)
- ___ Depleted Dark Surface (F7)
- ___ Redox Depressions (F8)
- ___ Marl (F10) **(LRR U)**
- ___ Depleted Ochric (F11) **(MLRA 151)**
- ___ Iron-Manganese Masses (F12) **(LRR O, P, T)**
- ___ Umbric Surface (F13) **(LRR P, T, U)**
- ___ Delta Ochric (F17) **(MLRA 151)**
- ___ Reduced Vertic (F18) **(MLRA 150A, 150B)**
- ___ Piedmont Floodplain Soils (F19) **(MLRA 149A)**
- ___ Anomalous Bright Loamy Soils (F20) **(MLRA 149A, 153C, 153D)**

**Indicators for Problematic Hydric Soils[3]:**

- ___ 1 cm Muck (A9) **(LRR O)**
- ___ 2 cm Muck (A10) **(LRR S)**
- ___ Reduced Vertic (F18) **(outside MLRA 150A,B)**
- ___ Piedmont Floodplain Soils (F19) **(LRR P, S, T)**
- ___ Anomalous Bright Loamy Soils (F20) **(MLRA 153B)**
- ___ Red Parent Material (TF2)
- ___ Very Shallow Dark Surface (TF12) (LRR T, U)
- ___ Other (Explain in Remarks)

[3]Indicators of hydrophytic vegetation and wetland hydrology must be present.

**Restrictive Layer (if observed):**

Type: _____

Depth (inches): _____

**Hydric Soil Present?** Yes ✓ No ___

Remarks:

## WETLAND DETERMINATION DATA FORM – Atlantic and Gulf Coastal Plain Region

Project/Site: Elcon City/County: Bucks Sampling Date: 6/25/2014

Applicant/Owner: Elcon State: PA Sampling Point: DP 7

Investigator(s): Scott Bush, PWS Section, Township, Range: _____

Landform (hillslope, terrace, etc.): Terrace Local relief (concave, convex, none): Flat Slope (%): 0

Subregion (LRR or MLRA): 149A Lat: 40.166593 Long: 74.762762 Datum: WGS84

Soil Map Unit Name: Na, Nanticoke-Hatboro silt loams NWI classification: UPL

Are climatic / hydrologic conditions on the site typical for this time of year? Yes ✓ No _____ (If no, explain in Remarks.)

Are Vegetation _____, Soil _____, or Hydrology _____ significantly disturbed? Are "Normal Circumstances" present? Yes ✓ No _____

Are Vegetation _____, Soil _____, or Hydrology _____ naturally problematic? (If needed, explain any answers in Remarks.)

### SUMMARY OF FINDINGS – Attach site map showing sampling point locations, transects, important features, etc.

| | | | |
|---|---|---|---|
| Hydrophytic Vegetation Present? | Yes _____ | No ✓ | **Is the Sampled Area within a Wetland?** Yes _____ No ✓ |
| Hydric Soil Present? | Yes _____ | No ✓ | |
| Wetland Hydrology Present? | Yes _____ | No ✓ | |

Remarks:

### HYDROLOGY

**Wetland Hydrology Indicators:**

Primary Indicators (minimum of one is required; check all that apply)

- ___ Surface Water (A1)
- ___ High Water Table (A2)
- ___ Saturation (A3)
- ___ Water Marks (B1)
- ___ Sediment Deposits (B2)
- ___ Drift Deposits (B3)
- ___ Algal Mat or Crust (B4)
- ___ Iron Deposits (B5)
- ___ Inundation Visible on Aerial Imagery (B7)
- ___ Water-Stained Leaves (B9)
- ___ Aquatic Fauna (B13)
- ___ Marl Deposits (B15) **(LRR U)**
- ___ Hydrogen Sulfide Odor (C1)
- ___ Oxidized Rhizospheres on Living Roots (C3)
- ___ Presence of Reduced Iron (C4)
- ___ Recent Iron Reduction in Tilled Soils (C6)
- ___ Thin Muck Surface (C7)
- ___ Other (Explain in Remarks)

Secondary Indicators (minimum of two required)

- ___ Surface Soil Cracks (B6)
- ___ Sparsely Vegetated Concave Surface (B8)
- ___ Drainage Patterns (B10)
- ___ Moss Trim Lines (B16)
- ___ Dry-Season Water Table (C2)
- ___ Crayfish Burrows (C8)
- ___ Saturation Visible on Aerial Imagery (C9)
- ___ Geomorphic Position (D2)
- ___ Shallow Aquitard (D3)
- ___ FAC-Neutral Test (D5)

**Field Observations:**

| | | | |
|---|---|---|---|
| Surface Water Present? | Yes _____ | No _____ | Depth (inches): _____ |
| Water Table Present? | Yes _____ | No _____ | Depth (inches): _____ |
| Saturation Present? (includes capillary fringe) | Yes _____ | No _____ | Depth (inches): _____ |

**Wetland Hydrology Present?** Yes _____ No ✓

Describe Recorded Data (stream gauge, monitoring well, aerial photos, previous inspections), if available:

Remarks:

**VEGETATION** – Use scientific names of plants.

Sampling Point: DP 7

| Tree Stratum (Plot sizes: _____ ) | Absolute % Cover | Dominant Species? | Indicator Status |
|---|---|---|---|
| 1. Prunus serotina | 20 | yes | FACU |
| 2. Acer negundo | 20 | yes | FAC |
| 3. | | | |
| 4. | | | |
| 5. | | | |
| 6. | | | |
| 7. | | | |
| | 40 | = Total Cover | |
| **Sapling Stratum** ( _____ ) | | | |
| 1. Morus rubra | 60 | yes | FACU |
| 2. | | | |
| 3. | | | |
| 4. | | | |
| 5. | | | |
| 6. | | | |
| 7. | | | |
| | 60 | = Total Cover | |
| **Shrub Stratum** ( _____ ) | | | |
| 1. | | | |
| 2. | | | |
| 3. | | | |
| 4. | | | |
| 5. | | | |
| 6. | | | |
| 7. | | | |
| | | = Total Cover | |
| **Herb Stratum** ( _____ ) | | | |
| 1. Ageratina altissima | 30 | yes | FACU |
| 2. Alliaria petiolata | 30 | yes | FACU |
| 3. | | | |
| 4. | | | |
| 5. | | | |
| 6. | | | |
| 7. | | | |
| 8. | | | |
| 9. | | | |
| 10. | | | |
| 11. | | | |
| 12. | | | |
| | 60 | = Total Cover | |
| **Woody Vine Stratum** ( _____ ) | | | |
| 1. Vitis aestivalis | 20 | yes | FACU |
| 2. Celastrus orbiculatus | 20 | yes | UPL |
| 3. | | | |
| 4. | | | |
| 5. | | | |
| | 40 | = Total Cover | |

**Dominance Test worksheet:**

Number of Dominant Species That Are OBL, FACW, or FAC: 1 (A)

Total Number of Dominant Species Across All Strata: 7 (B)

Percent of Dominant Species That Are OBL, FACW, or FAC: 14.3% (A/B)

**Prevalence Index worksheet:**

| Total % Cover of: | | Multiply by: |
|---|---|---|
| OBL species | | x 1 = |
| FACW species | | x 2 = |
| FAC species | 20 | x 3 = 60 |
| FACU species | 160 | x 4 = 640 |
| UPL species | 20 | x 5 = 100 |
| Column Totals: | 200 (A) | 800 (B) |

Prevalence Index = B/A = 4

**Hydrophytic Vegetation Indicators:**

___ Dominance Test is >50%

___ Prevalence Index is ≤3.0[1]

___ Problematic Hydrophytic Vegetation[1] (Explain)

[1]Indicators of hydric soil and wetland hydrology must be present.

Definitions of Vegetation Strata:

Tree – Woody plants, excluding woody vines, approximately 20 ft (6 m) or more in height and 3 in. (7.6 cm) or larger in diameter at breast height (DBH).

Sapling – Woody plants, excluding woody vines, approximately 20 ft (6 m) or more in height and less than 3 in. (7.6 cm) DBH.

Shrub – Woody plants, excluding woody vines, approximately 3 to 20 ft (1 to 6 m) in height.

Herb – All herbaceous (non-woody) plants, including herbaceous vines, regardless of size. Includes woody plants, except woody vines, less than approximately 3 ft (1 m) in height.

Woody vine – All woody vines, regardless of height.

**Hydrophytic Vegetation Present?** Yes _____ No ✓

Remarks: (If observed, list morphological adaptations below).

## SOIL

Sampling Point: DP 7

**Profile Description: (Describe to the depth needed to document the indicator or confirm the absence of indicators.)**

| Depth (inches) | Matrix Color (moist) | Matrix % | Redox Features Color (moist) | Redox % | Type[1] | Loc[2] | Texture | Remarks |
|---|---|---|---|---|---|---|---|---|
| 0-4 | 10YR 4/4 | | | | | | Loam | |
| 4-16 | 10YR 5/4 | | | | | | Loam w/ | |
| | | | | | | | | |
| | | | | | | | | |
| | | | | | | | | |
| | | | | | | | | |
| | | | | | | | | |

[1]Type: C=Concentration, D=Depletion, RM=Reduced Matrix, CS=Covered or Coated Sand Grains. [2]Location: PL=Pore Lining, M=Matrix.

**Hydric Soil Indicators:**

- ___ Histosol (A1)
- ___ Histic Epipedon (A2)
- ___ Black Histic (A3)
- ___ Hydrogen Sulfide (A4)
- ___ Stratified Layers (A5)
- ___ Organic Bodies (A6) **(LRR P, T, U)**
- ___ 5 cm Mucky Mineral (A7) **(LRR P, T, U)**
- ___ Muck Presence (A8) **(LRR U)**
- ___ 1 cm Muck (A9) **(LRR P, T)**
- ___ Depleted Below Dark Surface (A11)
- ___ Thick Dark Surface (A12)
- ___ Coast Prairie Redox (A16) **(MLRA 150A)**
- ___ Sandy Mucky Mineral (S1) **(LRR O, S)**
- ___ Sandy Gleyed Matrix (S4)
- ___ Sandy Redox (S5)
- ___ Stripped Matrix (S6)
- ___ Dark Surface (S7) **(LRR P, S, T, U)**
- ___ Polyvalue Below Surface (S8) **(LRR S, T, U)**
- ___ Thin Dark Surface (S9) **(LRR S, T, U)**
- ___ Loamy Mucky Mineral (F1) **(LRR O)**
- ___ Loamy Gleyed Matrix (F2)
- ___ Depleted Matrix (F3)
- ___ Redox Dark Surface (F6)
- ___ Depleted Dark Surface (F7)
- ___ Redox Depressions (F8)
- ___ Marl (F10) **(LRR U)**
- ___ Depleted Ochric (F11) **(MLRA 151)**
- ___ Iron-Manganese Masses (F12) **(LRR O, P, T)**
- ___ Umbric Surface (F13) **(LRR P, T, U)**
- ___ Delta Ochric (F17) **(MLRA 151)**
- ___ Reduced Vertic (F18) **(MLRA 150A, 150B)**
- ___ Piedmont Floodplain Soils (F19) **(MLRA 149A)**
- ___ Anomalous Bright Loamy Soils (F20) **(MLRA 149A, 153C, 153D)**

**Indicators for Problematic Hydric Soils[3]:**

- ___ 1 cm Muck (A9) **(LRR O)**
- ___ 2 cm Muck (A10) **(LRR S)**
- ___ Reduced Vertic (F18) **(outside MLRA 150A,B)**
- ___ Piedmont Floodplain Soils (F19) **(LRR P, S, T)**
- ___ Anomalous Bright Loamy Soils (F20) **(MLRA 153B)**
- ___ Red Parent Material (TF2)
- ___ Very Shallow Dark Surface (TF12) (LRR T, U)
- ___ Other (Explain in Remarks)

[3]Indicators of hydrophytic vegetation and wetland hydrology must be present.

**Restrictive Layer (if observed):**

Type: _____

Depth (inches): _____

**Hydric Soil Present?** Yes _____ No ✓

Remarks:

## WETLAND DETERMINATION DATA FORM – Atlantic and Gulf Coastal Plain Region

Project/Site: Elcon City/County: Bucks Sampling Date: 6/25/2014

Applicant/Owner: Elcon State: PA Sampling Point: DP 8

Investigator(s): Scott Bush, PWS Section, Township, Range: _____

Landform (hillslope, terrace, etc.): Terrace Local relief (concave, convex, none): Flat Slope (%): 0

Subregion (LRR or MLRA): 149A Lat: 40.169745 Long: -74.762271 Datum: WGS84

Soil Map Unit Name: Na, Nanticoke-Hatboro silt loams NWI classification: UPL

Are climatic / hydrologic conditions on the site typical for this time of year? Yes ✓ No _____ (If no, explain in Remarks.)

Are Vegetation _____, Soil _____, or Hydrology _____ significantly disturbed? Are "Normal Circumstances" present? Yes ✓ No _____

Are Vegetation _____, Soil _____, or Hydrology _____ naturally problematic? (If needed, explain any answers in Remarks.)

### SUMMARY OF FINDINGS – Attach site map showing sampling point locations, transects, important features, etc.

| | | | |
|---|---|---|---|
| Hydrophytic Vegetation Present? | Yes ✓ | No _____ | **Is the Sampled Area within a Wetland?** Yes ✓ No _____ |
| Hydric Soil Present? | Yes ✓ | No _____ | |
| Wetland Hydrology Present? | Yes ✓ | No _____ | |

Remarks:

### HYDROLOGY

**Wetland Hydrology Indicators:**

Primary Indicators (minimum of one is required; check all that apply)

- ___ Surface Water (A1)
- ___ High Water Table (A2)
- ✓ Saturation (A3)
- ___ Water Marks (B1)
- ___ Sediment Deposits (B2)
- ___ Drift Deposits (B3)
- ___ Algal Mat or Crust (B4)
- ___ Iron Deposits (B5)
- ___ Inundation Visible on Aerial Imagery (B7)
- ___ Water-Stained Leaves (B9)
- ___ Aquatic Fauna (B13)
- ___ Marl Deposits (B15) **(LRR U)**
- ___ Hydrogen Sulfide Odor (C1)
- ___ Oxidized Rhizospheres on Living Roots (C3)
- ___ Presence of Reduced Iron (C4)
- ___ Recent Iron Reduction in Tilled Soils (C6)
- ___ Thin Muck Surface (C7)
- ___ Other (Explain in Remarks)

Secondary Indicators (minimum of two required)

- ___ Surface Soil Cracks (B6)
- ___ Sparsely Vegetated Concave Surface (B8)
- ___ Drainage Patterns (B10)
- ___ Moss Trim Lines (B16)
- ___ Dry-Season Water Table (C2)
- ___ Crayfish Burrows (C8)
- ___ Saturation Visible on Aerial Imagery (C9)
- ___ Geomorphic Position (D2)
- ___ Shallow Aquitard (D3)
- ___ FAC-Neutral Test (D5)

**Field Observations:**

| | | | |
|---|---|---|---|
| Surface Water Present? | Yes _____ | No _____ | Depth (inches): _____ |
| Water Table Present? | Yes _____ | No _____ | Depth (inches): _____ |
| Saturation Present? (includes capillary fringe) | Yes ✓ | No _____ | Depth (inches): 2 |

**Wetland Hydrology Present?** Yes ✓ No _____

Describe Recorded Data (stream gauge, monitoring well, aerial photos, previous inspections), if available:

Remarks:

**VEGETATION –** Use scientific names of plants.

Sampling Point: DP 8

| Tree Stratum (Plot sizes: _____ ) | Absolute % Cover | Dominant Species? | Indicator Status |
|---|---|---|---|
| 1. | | | |
| 2. | | | |
| 3. | | | |
| 4. | | | |
| 5. | | | |
| 6. | | | |
| 7. | | | |
| | | = Total Cover | |

| Sapling Stratum ( _____ ) | | | |
|---|---|---|---|
| 1. | | | |
| 2. | | | |
| 3. | | | |
| 4. | | | |
| 5. | | | |
| 6. | | | |
| 7. | | | |
| | | = Total Cover | |

| Shrub Stratum ( _____ ) | | | |
|---|---|---|---|
| 1. | | | |
| 2. | | | |
| 3. | | | |
| 4. | | | |
| 5. | | | |
| 6. | | | |
| 7. | | | |
| | | = Total Cover | |

| Herb Stratum ( _____ ) | | | |
|---|---|---|---|
| 1. Phragmites australis | 98 | yes | FACW |
| 2. Lythrum salicaria | 2 | no | |
| 3. | | | |
| 4. | | | |
| 5. | | | |
| 6. | | | |
| 7. | | | |
| 8. | | | |
| 9. | | | |
| 10. | | | |
| 11. | | | |
| 12. | | | |
| | | = Total Cover | |

| Woody Vine Stratum ( _____ ) | | | |
|---|---|---|---|
| 1. | | | |
| 2. | | | |
| 3. | | | |
| 4. | | | |
| 5. | | | |
| | | = Total Cover | |

**Dominance Test worksheet:**

Number of Dominant Species That Are OBL, FACW, or FAC: 1 (A)

Total Number of Dominant Species Across All Strata: 1 (B)

Percent of Dominant Species That Are OBL, FACW, or FAC: 100 (A/B)

**Prevalence Index worksheet:**

| Total % Cover of: | | Multiply by: |
|---|---|---|
| OBL species | | x 1 = |
| FACW species | | x 2 = |
| FAC species | | x 3 = |
| FACU species | | x 4 = |
| UPL species | | x 5 = |
| Column Totals: | (A) | (B) |

Prevalence Index = B/A = _____

**Hydrophytic Vegetation Indicators:**

✓ Dominance Test is >50%

___ Prevalence Index is ≤3.0[1]

___ Problematic Hydrophytic Vegetation[1] (Explain)

[1]Indicators of hydric soil and wetland hydrology must be present.

Definitions of Vegetation Strata:

Tree – Woody plants, excluding woody vines, approximately 20 ft (6 m) or more in height and 3 in. (7.6 cm) or larger in diameter at breast height (DBH).

Sapling – Woody plants, excluding woody vines, approximately 20 ft (6 m) or more in height and less than 3 in. (7.6 cm) DBH.

Shrub – Woody plants, excluding woody vines, approximately 3 to 20 ft (1 to 6 m) in height.

Herb – All herbaceous (non-woody) plants, including herbaceous vines, regardless of size. Includes woody plants, except woody vines, less than approximately 3 ft (1 m) in height.

Woody vine – All woody vines, regardless of height.

**Hydrophytic Vegetation Present?** Yes ✓ No ___

Remarks: (If observed, list morphological adaptations below).

## SOIL

Sampling Point: DP 8

**Profile Description: (Describe to the depth needed to document the indicator or confirm the absence of indicators.)**

| Depth (inches) | Matrix Color (moist) | Matrix % | Redox Features Color (moist) | Redox % | Type[1] | Loc[2] | Texture | Remarks |
|---|---|---|---|---|---|---|---|---|
| 0-14 | 10YR 4/2 | 95 | 7.5YR 5/4 | 5 | C | M | Loamy | with slag gravel |
| | | | | | | | | |
| | | | | | | | | |
| | | | | | | | | |
| | | | | | | | | |
| | | | | | | | | |
| | | | | | | | | |

[1]Type: C=Concentration, D=Depletion, RM=Reduced Matrix, CS=Covered or Coated Sand Grains. [2]Location: PL=Pore Lining, M=Matrix.

**Hydric Soil Indicators:**

- ___ Histosol (A1)
- ___ Histic Epipedon (A2)
- ___ Black Histic (A3)
- ___ Hydrogen Sulfide (A4)
- ___ Stratified Layers (A5)
- ___ Organic Bodies (A6) **(LRR P, T, U)**
- ___ 5 cm Mucky Mineral (A7) **(LRR P, T, U)**
- ___ Muck Presence (A8) **(LRR U)**
- ___ 1 cm Muck (A9) **(LRR P, T)**
- ___ Depleted Below Dark Surface (A11)
- ___ Thick Dark Surface (A12)
- ___ Coast Prairie Redox (A16) **(MLRA 150A)**
- ___ Sandy Mucky Mineral (S1) **(LRR O, S)**
- ___ Sandy Gleyed Matrix (S4)
- ___ Sandy Redox (S5)
- ___ Stripped Matrix (S6)
- ___ Dark Surface (S7) **(LRR P, S, T, U)**
- ___ Polyvalue Below Surface (S8) **(LRR S, T, U)**
- ___ Thin Dark Surface (S9) **(LRR S, T, U)**
- ___ Loamy Mucky Mineral (F1) **(LRR O)**
- ___ Loamy Gleyed Matrix (F2)
- ✓ Depleted Matrix (F3)
- ___ Redox Dark Surface (F6)
- ___ Depleted Dark Surface (F7)
- ___ Redox Depressions (F8)
- ___ Marl (F10) **(LRR U)**
- ___ Depleted Ochric (F11) **(MLRA 151)**
- ___ Iron-Manganese Masses (F12) **(LRR O, P, T)**
- ___ Umbric Surface (F13) **(LRR P, T, U)**
- ___ Delta Ochric (F17) **(MLRA 151)**
- ___ Reduced Vertic (F18) **(MLRA 150A, 150B)**
- ___ Piedmont Floodplain Soils (F19) **(MLRA 149A)**
- ___ Anomalous Bright Loamy Soils (F20) **(MLRA 149A, 153C, 153D)**

**Indicators for Problematic Hydric Soils[3]:**

- ___ 1 cm Muck (A9) **(LRR O)**
- ___ 2 cm Muck (A10) **(LRR S)**
- ___ Reduced Vertic (F18) **(outside MLRA 150A,B)**
- ___ Piedmont Floodplain Soils (F19) **(LRR P, S, T)**
- ___ Anomalous Bright Loamy Soils (F20) **(MLRA 153B)**
- ___ Red Parent Material (TF2)
- ___ Very Shallow Dark Surface (TF12) (LRR T, U)
- ___ Other (Explain in Remarks)

[3]Indicators of hydrophytic vegetation and wetland hydrology must be present.

**Restrictive Layer (if observed):**

Type: _____

Depth (inches): _____

**Hydric Soil Present?** Yes ✓ No ___

Remarks:

# APPENDIX C

# COLOR PHOTOGRAPHS

ELCON PARCEL

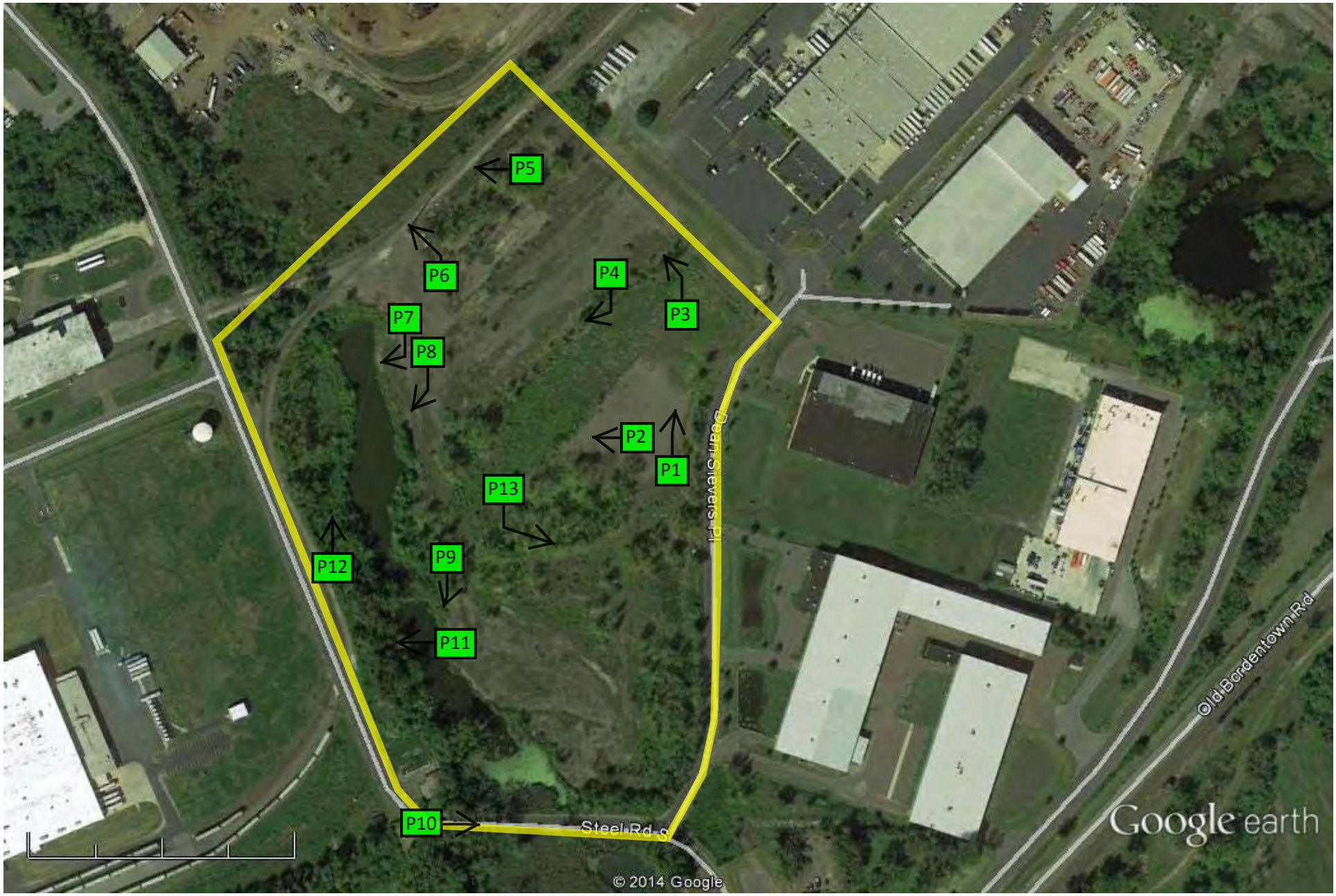


Google earth

feet 2000

meters 600

PHOTO LOCATION MAP

1. Looking northeast at industrial uplands in the eastern part of the Site.

2. Looking west at industrial uplands in the eastern part of the Site.

3. Looking north at industrial uplands in the eastern part of the Site.

4. Looking north at industrial uplands in the northern part of the Site.

5. Looking north at industrial uplands in the northern part of the Site within the Wheelabrator Falls power line right-of-way.

6. Looking north at industrial uplands in the northern part of the Site within the Wheelabrator Falls power line right-of-way. Wetland D, dominated by Phragmites is in the background.

7. Looking east at the northern portion of Area A.

8. Looking southeast at Area A.

9. Looking south at Area A.

10. Looking west at Steel Road South adjacent to the southern Site boundary.

11. Looking at Area B, a sparsely vegetated concave depression that seasonally holds standing water.

12. Looking east at industrial uplands in the southern part of the Site.

13. Looking south east at industrial uplands in the southern part of the Site.

APPENDIX D-17

CLIMATOLOGICAL INFORMATION

The following information includes observed average precipitation and temperature for the 10 climate regions across Pennsylvania on a monthly basis for the period 1899 through present. Regional snowfall data is now available for the period 1950 through 2004. Refer to the map below to determine each region's approximate boundary.

| Region 1 | Region 2 |
|---|---|
| Average Precipitation | Average Precipitation |
| Average Snowfall (yearly basis) | Average Snowfall (yearly basis) |
| Average Snowfall (seasonal basis) | Average Snowfall (seasonal basis) |
| Average Temperature | Average Temperature |
| Mean Precipitation & Departure from Mean | Mean Precipitation & Departure from Mean |
| Mean Snowfall & Departure from Mean | Mean Snowfall & Departure from Mean |
| Mean Temperature & Departure from Mean | Mean Temperature & Departure from Mean |
| **Region 3** | **Region 4** |
| Average Precipitation | Average Precipitation |
| Average Snowfall (yearly basis) | Average Snowfall (yearly basis) |
| Average Snowfall (seasonal basis) | Average Snowfall (seasonal basis) |
| Average Temperature | Average Temperature |
| Mean Precipitation & Departure from Mean | Mean Precipitation & Departure from Mean |
| Mean Snowfall & Departure from Mean | Mean Snowfall & Departure from Mean |
| Mean Temperature & Departure from Mean | Mean Temperature & Departure from Mean |
| **Region 5** | **Region 6** |
| Average Precipitation | Average Precipitation |

| | |
|---|---|
| Average Snowfall (yearly basis) | Average Snowfall (yearly basis) |
| Average Snowfall (seasonal basis) | Average Snowfall (seasonal basis) |
| Average Temperature | Average Temperature |
| Mean Precipitation & Departure from Mean | Mean Precipitation & Departure from Mean |
| Mean Snowfall & Departure from Mean | Mean Snowfall & Departure from Mean |
| Mean Temperature & Departure from Mean | Mean Temperature & Departure from Mean |
| **Region 7** | **Region 8** |
| Average Precipitation | Average Precipitation |
| Average Snowfall (yearly basis) | Average Snowfall (yearly basis) |
| Average Snowfall (seasonal basis) | Average Snowfall (seasonal basis) |
| Average Temperature | Average Temperature |
| Mean Precipitation & Departure from Mean | Mean Precipitation & Departure from Mean |
| Mean Snowfall & Departure from Mean | Mean Snowfall & Departure from Mean |
| Mean Temperature & Departure from Mean | Mean Temperature & Departure from Mean |
| **Region 9** | **Region 10** |
| Average Precipitation | Average Precipitation |
| Average Snowfall (yearly basis) | Average Snowfall (yearly basis) |
| Average Snowfall (seasonal basis) | Average Snowfall (seasonal basis) |
| Average Temperature | Average Temperature |
| Mean Precipitation & Departure from Mean | Mean Precipitation & Departure from Mean |
| Mean Snowfall & Departure from Mean | Mean Snowfall & Departure from Mean |
| Mean Temperature & Departure from Mean | Mean Temperature & Departure from Mean |

U.S. Department of Commerce
National Oceanic & Atmospheric Administration
National Environmental Satellite, Data,
and Information Service

# Climatography of the United States No. 20 1971-2000

National Climatic Data Center
Federal Building
151 Patton Avenue
Asheville, North Carolina 28801
www.ncdc.noaa.gov

**Station: PHILADELPHIA INTL AP, PA** **COOP ID: 366889**

**Climate Division: PA 3** **NWS Call Sign: PHL** **Elevation: 5 Feet** **Lat: 39˚52N** **Lon: 75˚14W**

| Temperature (˚F) | | | | | | | | | | | | | | | | | | | | | |
|---|---|---|---|---|---|---|---|---|---|---|---|---|---|---|---|---|---|---|---|---|---|
| Mean (1) | | | | Extremes | | | | | | | | | | Degree Days (1) Base Temp 65 | | Mean Number of Days (3) | | | | | |
| Month | Daily Max | Daily Min | Mean | Highest Daily(2) | Year | Day | Highest Month(1) Mean | Year | Lowest Daily(2) | Year | Day | Lowest Month(1) Mean | Year | Heating | Cooling | Max >= 100 | Max >= 90 | Max >= 50 | Max <= 32 | Min <= 32 | Min <= 0 |
| Jan | 39.0 | 25.5 | 32.3 | 74 | 1950 | 26 | 41.0 | 1998 | -7+ | 1982 | 17 | 20.4 | 1977 | 1020 | 0 | .0 | .0 | 5.6 | 8.0 | 24.8 | .4 |
| Feb | 42.1 | 27.5 | 34.8 | 74+ | 1949 | 15 | 41.8 | 1998 | -4 | 1961 | 2 | 23.2 | 1979 | 858 | 0 | .0 | .0 | 7.6 | 5.3 | 20.8 | .1 |
| Mar | 51.3 | 35.1 | 43.2 | 86 | 1998 | 30 | 48.9 | 1977 | 7 | 1984 | 10 | 35.9 | 1984 | 681 | 2 | .0 | .0 | 17.6 | .7 | 12.6 | .0 |
| Apr | 62.0 | 44.2 | 53.1 | 94 | 1976 | 18 | 58.5 | 1994 | 19 | 1982 | 7 | 48.6 | 1975 | 362 | 10 | .0 | .4 | 27.7 | .0 | 2.0 | .0 |
| May | 72.1 | 54.8 | 63.5 | 97+ | 1991 | 30 | 69.7 | 1991 | 28 | 1966 | 11 | 59.5 | 1997 | 113 | 70 | .0 | 1.3 | 30.9 | .0 | .0 | .0 |
| Jun | 80.6 | 64.0 | 72.3 | 100+ | 1952 | 26 | 77.1 | 1994 | 44+ | 1957 | 9 | 68.6 | 1977 | 12 | 234 | .1 | 4.6 | 30.0 | .0 | .0 | .0 |
| Jul | 85.5 | 69.7 | 77.6 | 104 | 1966 | 3 | 81.2 | 1994 | 51 | 1966 | 21 | 74.1 | 2000 | 1 | 395 | .3 | 10.5 | 31.0 | .0 | .0 | .0 |
| Aug | 84.0 | 68.5 | 76.3 | 101+ | 1953 | 31 | 80.7 | 1980 | 44 | 1986 | 29 | 72.7 | 1992 | 2 | 351 | .0 | 7.3 | 31.0 | .0 | .0 | .0 |
| Sep | 76.7 | 60.9 | 68.8 | 100+ | 1953 | 2 | 73.1 | 1980 | 35 | 1963 | 25 | 65.6 | 1984 | 39 | 152 | .0 | 1.6 | 30.0 | .0 | .0 | .0 |
| Oct | 65.7 | 48.7 | 57.2 | 89+ | 1951 | 5 | 63.9 | 1971 | 25+ | 1962 | 25 | 52.0 | 1988 | 269 | 19 | .0 | .0 | 30.5 | .0 | .7 | .0 |
| Nov | 54.8 | 39.5 | 47.1 | 84 | 1950 | 1 | 53.3 | 1975 | 15+ | 1955 | 29 | 40.5 | 1976 | 545 | 2 | .0 | .0 | 21.1 | .1 | 7.3 | .0 |
| Dec | 44.2 | 30.6 | 37.4 | 73+ | 1998 | 4 | 42.8 | 1984 | 1+ | 1980 | 25 | 25.6 | 1989 | 857 | 0 | .0 | .0 | 9.6 | 3.6 | 19.2 | .0 |
| Ann | 63.2 | 47.4 | 55.3 | 104 | Jul 1966 | 3 | 81.2 | Jul 1994 | -7+ | Jan 1982 | 17 | 20.4 | Jan 1977 | 4759 | 1235 | .4 | 25.7 | 272.6 | 17.7 | 87.4 | .5 |

+ Also occurred on an earlier date(s)

@ Denotes mean number of days greater than 0 but less than .05

Complete documentation available from: www.ncdc.noaa.gov/oa/climate/normals/usnormals.html

**(1)** From the 1971-2000 Monthly Normals

**(2)** Derived from station's available digital record: 1948-2001

**(3)** Derived from 1971-2000 serially complete daily data

Issue Date: February 2004

U.S. Department of Commerce
National Oceanic & Atmospheric Administration
National Environmental Satellite, Data,
and Information Service

# Climatography of the United States No. 20 1971-2000

National Climatic Data Center
Federal Building
151 Patton Avenue
Asheville, North Carolina 28801
www.ncdc.noaa.gov

**Station: PHILADELPHIA INTL AP, PA**

**COOP ID: 366889**

**Climate Division: PA 3** **NWS Call Sign: PHL** **Elevation: 5 Feet** **Lat: 39°52N** **Lon: 75°14W**

## Precipitation (inches)

| | Precipitation Totals | | | | | | | | | Mean Number of Days (3) | | | | Precipitation Probabilities (1) Probability that the monthly/annual precipitation will be equal to or less than the indicated amount | | | | | | | | | | |
|---|---|---|---|---|---|---|---|---|---|---|---|---|---|---|---|---|---|---|---|---|---|---|---|---|
| | Means/ Medians(1) | | Extremes | | | | | | | Daily Precipitation | | | | Monthly/Annual Precipitation vs Probability Levels These values were determined from the incomplete gamma distribution | | | | | | | | | | |
| Month | Mean | Med-ian | Highest Daily(2) | Year | Day | Highest Monthly(1) | Year | Lowest Monthly(1) | Year | >= 0.01 | >= 0.10 | >= 0.50 | >= 1.00 | .05 | .10 | .20 | .30 | .40 | .50 | .60 | .70 | .80 | .90 | .95 |
| Jan | 3.52 | 3.16 | 2.32 | 1998 | 23 | 8.86 | 1978 | .50 | 1981 | 10.9 | 6.7 | 2.7 | .9 | 1.08 | 1.41 | 1.91 | 2.34 | 2.76 | 3.19 | 3.66 | 4.22 | 4.94 | 6.07 | 7.11 |
| Feb | 2.74 | 2.86 | 1.95 | 1966 | 13 | 6.44 | 1979 | .75 | 1991 | 9.7 | 5.6 | 2.0 | .6 | .94 | 1.20 | 1.57 | 1.89 | 2.20 | 2.51 | 2.86 | 3.26 | 3.77 | 4.57 | 5.30 |
| Mar | 3.81 | 3.92 | 2.27 | 1975 | 19 | 7.01 | 1980 | 1.16 | 1987 | 10.5 | 6.7 | 2.8 | 1.0 | 1.33 | 1.69 | 2.21 | 2.65 | 3.07 | 3.50 | 3.97 | 4.52 | 5.22 | 6.31 | 7.31 |
| Apr | 3.49 | 3.07 | 2.43 | 1986 | 16 | 8.12 | 1983 | .52 | 1985 | 10.9 | 6.6 | 2.6 | .8 | 1.19 | 1.52 | 2.00 | 2.41 | 2.80 | 3.20 | 3.64 | 4.15 | 4.81 | 5.83 | 6.77 |
| May | 3.89 | 3.79 | 2.49+ | 1989 | 2 | 7.03 | 1983 | .70+ | 1986 | 11.7 | 7.0 | 2.6 | .8 | 1.37 | 1.74 | 2.27 | 2.71 | 3.14 | 3.58 | 4.06 | 4.61 | 5.33 | 6.43 | 7.44 |
| Jun | 3.29 | 3.11 | 4.62 | 1973 | 29 | 7.88 | 1973 | .57 | 1988 | 10.0 | 6.0 | 2.1 | .8 | .72 | 1.03 | 1.51 | 1.94 | 2.38 | 2.85 | 3.37 | 4.00 | 4.82 | 6.14 | 7.38 |
| Jul | 4.39 | 4.32 | 4.38 | 1989 | 5 | 10.42 | 1994 | .68 | 1983 | 9.4 | 5.9 | 2.6 | 1.3 | 1.08 | 1.49 | 2.13 | 2.70 | 3.26 | 3.86 | 4.52 | 5.31 | 6.35 | 7.99 | 9.52 |
| Aug | 3.82 | 3.74 | 4.77 | 1971 | 27 | 9.61 | 1971 | .80 | 1980 | 8.4 | 5.7 | 2.4 | 1.2 | 1.18 | 1.54 | 2.08 | 2.55 | 3.00 | 3.46 | 3.98 | 4.58 | 5.36 | 6.57 | 7.70 |
| Sep | 3.88 | 3.22 | 6.63 | 1999 | 16 | 13.07 | 1999 | 1.12 | 1972 | 9.1 | 5.7 | 2.4 | 1.1 | 1.03 | 1.40 | 1.96 | 2.45 | 2.94 | 3.45 | 4.01 | 4.68 | 5.56 | 6.92 | 8.21 |
| Oct | 2.75 | 2.59 | 3.82 | 1980 | 25 | 5.99 | 1995 | .94 | 1994 | 8.0 | 4.8 | 2.0 | .7 | 1.05 | 1.31 | 1.67 | 1.98 | 2.27 | 2.56 | 2.88 | 3.24 | 3.71 | 4.43 | 5.09 |
| Nov | 3.16 | 2.67 | 3.99 | 1977 | 7 | 9.06 | 1972 | .32 | 1976 | 9.4 | 5.7 | 2.0 | .6 | .56 | .84 | 1.30 | 1.73 | 2.17 | 2.65 | 3.19 | 3.85 | 4.73 | 6.15 | 7.50 |
| Dec | 3.31 | 2.94 | 2.30 | 1948 | 30 | 8.47 | 1996 | .77 | 1980 | 10.6 | 6.0 | 2.4 | .8 | .71 | 1.02 | 1.50 | 1.94 | 2.38 | 2.85 | 3.38 | 4.02 | 4.85 | 6.19 | 7.45 |
| Ann | 42.05 | 41.31 | 6.63 | Sep 1999 | 16 | 13.07 | Sep 1999 | .32 | Nov 1976 | 118.6 | 72.4 | 28.6 | 10.6 | 30.11 | 32.43 | 35.39 | 37.64 | 39.63 | 41.56 | 43.54 | 45.74 | 48.40 | 52.26 | 55.59 |

+ Also occurred on an earlier date(s)
# Denotes amounts of a trace
@ Denotes mean number of days greater than 0 but less than .05
** Statistics not computed because less than six years out of thirty had measurable precipitation

**(1)** From the 1971-2000 Monthly Normals
**(2)** Derived from station's available digital record: 1948-2001
**(3)** Derived from 1971-2000 serially complete daily data

Complete documentation available from:
www.ncdc.noaa.gov/oa/climate/normals/usnormals.html

U.S. Department of Commerce
National Oceanic & Atmospheric Administration
National Environmental Satellite, Data,
and Information Services

# Climatography of the United States No. 20 1971-2000

National Climatic Data Center
Federal Building
151 Patton Avenue
Asheville, North Carolina 28801
www.ncdc.noaa.gov

**Station: PHILADELPHIA INTL AP, PA** **COOP ID: 366889**

**Climate Division: PA 3** **NWS Call Sign: PHL** **Elevation: 5 Feet** **Lat: 39°52N** **Lon: 75°14W**

| Snow (inches) | | | | | | | | | | | | | | | | | | | | | | | | |
|---|---|---|---|---|---|---|---|---|---|---|---|---|---|---|---|---|---|---|---|---|---|---|---|---|
| Snow Totals | | | | | | | | | | | | | | | Mean Number of Days (1) | | | | | | | | | |
| Means/Medians (1) | | | | | Extremes (2) | | | | | | | | | | Snow Fall >= Thresholds | | | | | Snow Depth >= Thresholds | | | | |
| Month | Snow Fall Mean | Snow Fall Median | Snow Depth Mean | Snow Depth Median | Highest Daily Snow Fall | Year | Day | Highest Monthly Snow Fall | Year | Highest Daily Snow Depth | Year | Day | Highest Monthly Mean Snow Depth | Year | 0.1 | 1.0 | 3.0 | 5.0 | 10.0 | 1 | 3 | 5 | 10 |
| Jan | 6.4 | 5.0 | 1 | 0 | 9.3 | 1978 | 20 | 23.4 | 1978 | 11 | 1978 | 21 | 4 | 1982 | 4.3 | 1.9 | .7 | .2 | .0 | 6.0 | 2.6 | 1.4 | .1 |
| Feb | 6.6 | 3.5 | 1 | 0 | 21.1 | 1983 | 11 | 27.6 | 1979 | 22 | 1983 | 12 | 4+ | 1979 | 3.4 | 1.5 | .7 | .3 | .1 | 5.2 | 3.1 | 1.3 | .3 |
| Mar | 3.2 | 2.3 | # | 0 | 11.7 | 1993 | 13 | 12.4 | 1993 | 12 | 1993 | 14 | 1+ | 1993 | 2.0 | .8 | .3 | .1 | @ | 1.2 | .5 | .2 | .1 |
| Apr | .6 | .0 | # | 0 | 3.5 | 1982 | 6 | 4.3 | 1971 | 3 | 1997 | 1 | # | 2000 | .4 | .2 | .1 | .0 | .0 | .1 | @ | .0 | .0 |
| May | .0 | .0 | # | 0 | .0 | 0 | 0 | .0 | 0 | 0 | 0 | 0 | # | 2000 | .0 | .0 | .0 | .0 | .0 | .0 | .0 | .0 | .0 |
| Jun | .0 | .0 | 0 | 0 | .0 | 0 | 0 | .0 | 0 | 0 | 0 | 0 | 0 | 0 | .0 | .0 | .0 | .0 | .0 | .0 | .0 | .0 | .0 |
| Jul | .0 | .0 | 0 | 0 | .0 | 0 | 0 | .0 | 0 | 0 | 0 | 0 | 0 | 0 | .0 | .0 | .0 | .0 | .0 | .0 | .0 | .0 | .0 |
| Aug | .0 | .0 | 0 | 0 | .0 | 0 | 0 | .0 | 0 | 0 | 0 | 0 | 0 | 0 | .0 | .0 | .0 | .0 | .0 | .0 | .0 | .0 | .0 |
| Sep | .0 | .0 | 0 | 0 | .0 | 0 | 0 | .0 | 0 | 0 | 0 | 0 | 0 | 0 | .0 | .0 | .0 | .0 | .0 | .0 | .0 | .0 | .0 |
| Oct | .1 | .0 | 0 | 0 | 2.1 | 1979 | 10 | 2.1 | 1979 | 0 | 0 | 0 | 0 | 0 | .0 | .0 | .0 | .0 | .0 | .0 | .0 | .0 | .0 |
| Nov | .4 | # | # | 0 | 2.8 | 1989 | 23 | 4.6 | 1989 | 5 | 1989 | 23 | # | 1995 | .3 | .2 | .0 | .0 | .0 | .2 | .1 | @ | .0 |
| Dec | 2.0 | .9 | # | 0 | 9.0 | 2000 | 30 | 10.5 | 2000 | 9 | 2000 | 31 | 1 | 1982 | 1.6 | .5 | .3 | .1 | .0 | 1.2 | .5 | .2 | .0 |
| Ann | 19.3 | 11.7 | N/A | N/A | 21.1 | Feb 1983 | 11 | 27.6 | Feb 1979 | 22 | Feb 1983 | 12 | 4+ | Jan 1982 | 12.0 | 5.1 | 2.1 | .7 | .1 | 13.9 | 6.8 | 3.1 | .5 |

+ Also occurred on an earlier date(s) #Denotes trace amounts

**@** Denotes mean number of days greater than 0 but less than .05

-9/-9.9 represents missing values
Annual statistics for Mean/Median snow depths are not appropriate

**(1)** Derived from Snow Climatology and 1971-2000 daily data

**(2)** Derived from 1971-2000 daily data

Complete documentation available from:
www.ncdc.noaa.gov/oa/climate/normals/usnormals.html

U.S. Department of Commerce
National Oceanic & Atmospheric Administration
National Environmental Satellite, Data,
and Information Service

# Climatography of the United States No. 20 1971-2000

National Climatic Data Center
Federal Building
151 Patton Avenue
Asheville, North Carolina 28801
www.ncdc.noaa.gov

**Station: PHILADELPHIA INTL AP, PA** **COOP ID: 366889**

**Climate Division: PA 3** **NWS Call Sign: PHL** **Elevation: 5 Feet** **Lat: 39˚52N** **Lon: 75˚14W**

## Freeze Data

### Spring Freeze Dates (Month/Day)

| Temp (F) | Probability of later date in spring (thru Jul 31) than indicated(*) | | | | | | | | |
|---|---|---|---|---|---|---|---|---|---|
| | .10 | .20 | .30 | .40 | .50 | .60 | .70 | .80 | .90 |
| 36 | 4/27 | 4/23 | 4/20 | 4/18 | 4/15 | 4/13 | 4/10 | 4/07 | 4/03 |
| 32 | 4/19 | 4/14 | 4/11 | 4/08 | 4/06 | 4/03 | 4/01 | 3/29 | 3/24 |
| 28 | 4/09 | 4/04 | 4/01 | 3/29 | 3/26 | 3/23 | 3/20 | 3/16 | 3/11 |
| 24 | 3/30 | 3/25 | 3/21 | 3/18 | 3/15 | 3/12 | 3/09 | 3/05 | 2/28 |
| 20 | 3/24 | 3/18 | 3/14 | 3/10 | 3/06 | 3/03 | 2/27 | 2/23 | 2/16 |
| 16 | 3/13 | 3/05 | 2/27 | 2/22 | 2/18 | 2/13 | 2/08 | 2/03 | 1/26 |

### Fall Freeze Dates (Month/Day)

| Temp (F) | Probability of earlier date in fall (beginning Aug 1) than indicated(*) | | | | | | | | |
|---|---|---|---|---|---|---|---|---|---|
| | .10 | .20 | .30 | .40 | .50 | .60 | .70 | .80 | .90 |
| 36 | 10/12 | 10/17 | 10/20 | 10/23 | 10/26 | 10/29 | 11/01 | 11/04 | 11/09 |
| 32 | 10/20 | 10/25 | 10/29 | 11/01 | 11/04 | 11/07 | 11/10 | 11/13 | 11/18 |
| 28 | 11/03 | 11/09 | 11/12 | 11/16 | 11/19 | 11/22 | 11/25 | 11/29 | 12/05 |
| 24 | 11/16 | 11/22 | 11/25 | 11/29 | 12/02 | 12/05 | 12/08 | 12/12 | 12/17 |
| 20 | 11/28 | 12/04 | 12/08 | 12/12 | 12/15 | 12/18 | 12/21 | 12/26 | 12/31 |
| 16 | 12/10 | 12/17 | 12/22 | 12/27 | 12/31 | 1/04 | 1/08 | 1/13 | 1/21 |

### Freeze Free Period

| Temp (F) | Probability of longer than indicated freeze free period (Days) | | | | | | | | |
|---|---|---|---|---|---|---|---|---|---|
| | .10 | .20 | .30 | .40 | .50 | .60 | .70 | .80 | .90 |
| 36 | 214 | 206 | 201 | 197 | 193 | 189 | 184 | 179 | 172 |
| 32 | 234 | 226 | 221 | 216 | 211 | 206 | 201 | 196 | 188 |
| 28 | 257 | 250 | 245 | 241 | 237 | 234 | 229 | 225 | 218 |
| 24 | 282 | 275 | 270 | 265 | 261 | 257 | 252 | 247 | 240 |
| 20 | 308 | 299 | 293 | 288 | 283 | 278 | 272 | 266 | 257 |
| 16 | 344 | 334 | 327 | 321 | 315 | 310 | 304 | 297 | 287 |

***** Probability of observing a temperature as cold, or colder, later in the spring or earlier in the fall than the indicated date.

**0/00** Indicates that the probability of occurrence of threshold temperature is less than the indicated probability.

Derived from 1971-2000 serially complete daily data

Complete documentation available from:
www.ncdc.noaa.gov/oa/climate/normals/usnormals.html

U.S. Department of Commerce
National Oceanic & Atmospheric Administration
National Environmental Satellite, Data,
and Information Service

# Climatography of the United States No. 20 1971-2000

National Climatic Data Center
Federal Building
151 Patton Avenue
Asheville, North Carolina 28801
www.ncdc.noaa.gov

**Station: PHILADELPHIA INTL AP, PA** **COOP ID: 366889**

**Climate Division: PA 3** **NWS Call Sign: PHL** **Elevation: 5 Feet** **Lat: 39˚52N** **Lon: 75˚14W**

## Degree Days to Selected Base Temperatures (˚F)

| Base | Heating Degree Days (1) | | | | | | | | | | | | |
|---|---|---|---|---|---|---|---|---|---|---|---|---|---|
| Below | Jan | Feb | Mar | Apr | May | Jun | Jul | Aug | Sep | Oct | Nov | Dec | Ann |
| 65 | 1020 | 858 | 681 | 362 | 113 | 12 | 1 | 2 | 39 | 269 | 545 | 857 | 4759 |
| 60 | 860 | 706 | 520 | 219 | 42 | 1 | 0 | 0 | 4 | 153 | 390 | 701 | 3596 |
| 57 | 767 | 622 | 430 | 149 | 19 | 0 | 0 | 0 | 1 | 102 | 308 | 608 | 3006 |
| 55 | 705 | 566 | 373 | 109 | 10 | 0 | 0 | 0 | 0 | 76 | 256 | 552 | 2647 |
| 50 | 562 | 435 | 239 | 40 | 1 | 0 | 0 | 0 | 0 | 29 | 147 | 409 | 1862 |
| 32 | 156 | 88 | 13 | 0 | 0 | 0 | 0 | 0 | 0 | 0 | 2 | 71 | 330 |

| Base | Cooling Degree Days (1) | | | | | | | | | | | | |
|---|---|---|---|---|---|---|---|---|---|---|---|---|---|
| Above | Jan | Feb | Mar | Apr | May | Jun | Jul | Aug | Sep | Oct | Nov | Dec | Ann |
| 32 | 124 | 151 | 362 | 637 | 981 | 1213 | 1414 | 1371 | 1101 | 774 | 448 | 210 | 8786 |
| 55 | 1 | 1 | 15 | 71 | 278 | 523 | 701 | 658 | 412 | 129 | 25 | 3 | 2817 |
| 57 | 1 | 0 | 10 | 51 | 225 | 463 | 639 | 596 | 354 | 95 | 17 | 1 | 2452 |
| 60 | 0 | 0 | 6 | 29 | 155 | 374 | 546 | 503 | 270 | 56 | 8 | 0 | 1947 |
| 65 | 0 | 0 | 2 | 10 | 70 | 234 | 395 | 351 | 152 | 19 | 2 | 0 | 1235 |
| 70 | 0 | 0 | 0 | 3 | 24 | 119 | 240 | 204 | 68 | 4 | 0 | 0 | 662 |

## Growing Degree Units (2)

| Base | Growing Degree Units (Monthly) | | | | | | | | | | | | Growing Degree Units (Accumulated Monthly) | | | | | | | | | | | |
|---|---|---|---|---|---|---|---|---|---|---|---|---|---|---|---|---|---|---|---|---|---|---|---|---|
| | Jan | Feb | Mar | Apr | May | Jun | Jul | Aug | Sep | Oct | Nov | Dec | Jan | Feb | Mar | Apr | May | Jun | Jul | Aug | Sep | Oct | Nov | Dec |
| 40 | 40 | 58 | 173 | 409 | 742 | 980 | 1174 | 1132 | 869 | 537 | 239 | 76 | 40 | 98 | 271 | 680 | 1422 | 2402 | 3576 | 4708 | 5577 | 6114 | 6353 | 6429 |
| 45 | 14 | 22 | 88 | 269 | 587 | 830 | 1019 | 977 | 719 | 384 | 139 | 33 | 14 | 36 | 124 | 393 | 980 | 1810 | 2829 | 3806 | 4525 | 4909 | 5048 | 5081 |
| 50 | 3 | 7 | 38 | 155 | 434 | 680 | 864 | 822 | 570 | 246 | 68 | 6 | 3 | 10 | 48 | 203 | 637 | 1317 | 2181 | 3003 | 3573 | 3819 | 3887 | 3893 |
| 55 | 0 | 0 | 16 | 77 | 285 | 530 | 709 | 667 | 420 | 137 | 27 | 2 | 0 | 0 | 16 | 93 | 378 | 908 | 1617 | 2284 | 2704 | 2841 | 2868 | 2870 |
| 60 | 0 | 0 | 4 | 30 | 162 | 384 | 554 | 512 | 276 | 61 | 7 | 0 | 0 | 0 | 4 | 34 | 196 | 580 | 1134 | 1646 | 1922 | 1983 | 1990 | 1990 |
| Base | Growing Degree Units for Corn (Monthly) | | | | | | | | | | | | Growing Degree Units for Corn (Accumulated Monthly) | | | | | | | | | | | |
| 50/86 | 21 | 33 | 96 | 223 | 448 | 666 | 822 | 793 | 570 | 299 | 118 | 36 | 21 | 54 | 150 | 373 | 821 | 1487 | 2309 | 3102 | 3672 | 3971 | 4089 | 4125 |

**(1)** Derived from the 1971-2000 Monthly Normals
**(2)** Derived from 1971-2000 serially complete daily data
**Note:** For corn, temperatures below 50 are set to 50, and temperatures above 86 are set to 86

Complete documentation available from:
www.ncdc.noaa.gov/oa/climate/normals/usnormals.html

Notes

a. The monthly means are simple arithmetic averages computed by summing the monthly values for the period 1971-2000 and dividing by thirty. Prior to averaging, the data are adjusted if necessary to compensate for data quality issues, station moves or changes in station reporting practices. Missing months are replaced by estimates based on neighboring stations.

b. The median is defined as the middle value in an ordered set of values. The median is being provided for the snow and precipitation elements because the mean can be a misleading value for precipitation normals.

c. Only observed validated values were used to select the extreme daily values.

d. Extreme monthly temperature/precipitation means were selected from the monthly normals data.
Monthly snow extremes were calculated from daily values quality controlled to be consistent with the Snow Climatology.

e. Degree Days were derived using the same techniques as the 1971-2000 normals.
Compete documentation for the 1971-2000 Normals is available on the internet from:
www.ncdc.noaa.gov/oa/climate/normals/usnormals.html

f. Mean "number of days statistics" for temperature and precipitation were calculated from a serially complete daily data set .
Documentation of the serially complete data set is available from the link below:

g. Snowfall and snow depth statistics were derived from the Snow Climatology.
Documentation for the Snow Climatology project is available from the link under references.

Data Sources for Tables

Several different data sources were used to create the Clim20 climate summaries. In some cases the daily extremes appear inconsistent with the monthly extremes and or the mean number of days statistics. For example, a high daily extreme value may not be reflected in the highest monthly value or the mean number of days threshold that is less than and equal to the extreme value. Some of these difference are caused by different periods of record. Daily extremes are derived from the station's entire period of record while the serial data and normals data were are for the 1971-2000 period. Therefore extremes observed before 1971 would not be included in the 1971-2000 normals or the 1971-2000 serial daily data set. Inconsistencies can also occur when monthly values are adjusted to reflect the current observing conditions or were replaced during the 1971-2000 Monthly Normals processing and are not reconciled with the Summary of the Day data.

a. Temperature/ Precipitation Tables
   1. 1971-2000 Monthly Normals
   2. Cooperative Summary of the Day
   3. National Weather Service station records
   4. 1971-2000 serially complete daily data

b. Degree Day Table
   1. Monthly and Annual Heating and Cooling Degree Days Normals to Selected Bases derived from 1971-2000 Monthly Normals
   2. Daily Normal Growing Degree Units to Selected Base Temperatures derived from 1971-2000 serially complete daily data

c. Snow Tables
   1. Snow Climatology
   2. Cooperative Summary of the Day

d. Freeze Data Table
   1971-2000 serially complete daily data

References

U.S. Climate Normals 1971-2000, www.ncdc.noaa.gov/normals.html
U.S. Climate Normals 1971-2000-Products Clim20, www.ncdc.noaa.gov/oa/climate/normals/usnormalsprods.html
Snow Climatology Project Description, www.ncdc.noaa.gov/oa/climate/monitoring/snowclim/mainpage.html
Eischeid, J. K., P. Pasteris, H. F. Diaz, M. Plantico, and N. Lott, 2000: Creating a serially complete, national daily time series of temperature and precipitation for the Western United States. J. Appl. Meteorol., 39, 1580-1591,
www1.ncdc.noaa.gov/pub/data/special/ serialcomplete_jam_0900.pdf

## *Division 3 Monthly Precipitation*

The precipitation data is reported in inches
*Values since January 2011 are provisional

| Year | January | February | March | April | May | June | July | August | September | October | November | December |
|---|---|---|---|---|---|---|---|---|---|---|---|---|
| 2016 | 2.48 | 4.07 | 1.45 | 2.04 | 3.92 | 2.01 | | | | | | |
| 2015 | 2.83 | 1.47 | 4.94 | 2.31 | 1.24 | 6.23 | 3.90 | 7.39 | 4.20 | 3.34 | 1.21 | 4.26 |
| 2014 | 3.08 | 4.10 | 2.96 | 4.37 | 6.25 | 3.82 | 4.45 | 2.21 | 1.96 | 3.50 | 3.25 | 3.24 |
| 2013 | 3.55 | 1.76 | 2.17 | 2.61 | 2.91 | 6.87 | 4.94 | 4.35 | 1.69 | 3.67 | 2.35 | 4.18 |
| 2012 | 2.46 | 1.04 | 1.45 | 2.30 | 4.44 | 3.25 | 3.36 | 3.94 | 5.09 | 5.83 | 1.01 | 3.66 |
| 2011 | 2.59 | 2.73 | 5.22 | 5.43 | 4.14 | 2.78 | 2.69 | 11.85 | 13.85 | 4.29 | 4.33 | 3.70 |
| 2010 | 2.48 | 4.12 | 5.29 | 2.53 | 3.81 | 2.64 | 5.99 | 2.18 | 4.06 | 7.23 | 2.44 | 2.94 |
| 2009 | 2.28 | 0.77 | 1.54 | 3.96 | 5.53 | 5.55 | 4.36 | 7.95 | 4.18 | 5.88 | 1.96 | 6.34 |
| 2008 | 1.36 | 5.60 | 4.33 | 3.13 | 4.69 | 2.83 | 4.46 | 1.92 | 6.35 | 2.89 | 2.77 | 6.22 |
| 2007 | 3.14 | 2.72 | 4.42 | 7.25 | 1.54 | 4.28 | 4.41 | 4.76 | 1.29 | 5.79 | 3.04 | 5.22 |
| 2006 | 4.77 | 2.27 | 0.98 | 3.85 | 2.55 | 11.18 | 4.98 | 3.37 | 6.03 | 4.73 | 5.37 | 2.23 |
| 2005 | 4.75 | 2.15 | 4.19 | 5.28 | 1.56 | 2.96 | 6.15 | 2.36 | 0.95 | 10.18 | 3.31 | 3.32 |
| 2004 | 2.06 | 2.63 | 2.05 | 5.18 | 3.54 | 5.18 | 8.60 | 5.72 | 9.10 | 2.38 | 4.57 | 3.91 |
| 2003 | 2.04 | 4.88 | 4.23 | 2.77 | 4.08 | 8.02 | 3.69 | 6.22 | 8.65 | 5.82 | 4.33 | 5.07 |
| 2002 | 2.85 | 0.54 | 4.16 | 3.34 | 4.63 | 4.28 | 1.24 | 2.94 | 4.11 | 6.91 | 4.34 | 5.28 |
| 2001 | 2.86 | 2.49 | 4.94 | 2.25 | 3.88 | 3.99 | 2.86 | 2.86 | 3.81 | 0.74 | 1.06 | 2.25 |
| 2000 | 3.03 | 2.36 | 6.08 | 3.29 | 4.32 | 4.78 | 3.46 | 3.66 | 6.07 | 1.25 | 2.16 | 4.19 |
| 1999 | 6.23 | 3.04 | 3.90 | 3.25 | 2.19 | 1.74 | 1.10 | 4.51 | 12.25 | 3.01 | 2.64 | 2.97 |
| 1998 | 4.40 | 4.00 | 4.86 | 4.99 | 5.55 | 5.32 | 2.84 | 3.02 | 1.70 | 3.63 | 1.30 | 0.84 |
| 1997 | 3.01 | 1.89 | 4.07 | 1.84 | 3.25 | 2.45 | 4.23 | 3.51 | 2.75 | 2.18 | 3.76 | 2.59 |
| 1996 | 6.42 | 1.96 | 4.17 | 5.01 | 3.72 | 5.35 | 7.70 | 3.74 | 5.18 | 5.90 | 4.25 | 7.60 |
| 1995 | 3.69 | 2.25 | 2.45 | 1.73 | 3.95 | 2.42 | 4.77 | 1.14 | 3.54 | 7.32 | 4.11 | 2.38 |
| 1994 | 5.57 | 3.41 | 6.15 | 2.95 | 3.86 | 3.29 | 6.82 | 5.62 | 3.08 | 1.32 | 3.97 | 2.44 |
| 1993 | 2.09 | 2.73 | 7.11 | 6.56 | 1.48 | 2.69 | 3.33 | 3.81 | 7.17 | 3.51 | 3.99 | 4.79 |
| 1992 | 1.70 | 1.56 | 3.93 | 1.68 | 4.14 | 3.19 | 4.98 | 2.67 | 4.14 | 2.05 | 5.03 | 3.69 |
| 1991 | 3.01 | 1.17 | 3.98 | 2.55 | 2.79 | 2.14 | 4.48 | 4.07 | 3.98 | 2.48 | 2.31 | 3.80 |
| 1990 | 4.91 | 1.99 | 2.06 | 3.29 | 6.82 | 2.89 | 3.68 | 6.23 | 2.05 | 3.59 | 2.40 | 5.47 |
| 1989 | 2.41 | 2.75 | 3.74 | 1.86 | 9.35 | 6.17 | 7.70 | 2.36 | 5.11 | 4.31 | 2.26 | 0.85 |
| 1988 | 2.53 | 3.35 | 2.15 | 2.64 | 6.41 | 0.92 | 7.60 | 3.44 | 2.69 | 2.49 | 5.37 | 1.01 |
| 1987 | 4.19 | 1.16 | 1.81 | 3.64 | 3.31 | 2.34 | 4.21 | 3.73 | 7.19 | 2.89 | 3.77 | 1.83 |
| 1986 | 3.55 | 3.54 | 2.04 | 3.92 | 1.63 | 1.90 | 4.99 | 5.03 | 2.09 | 2.33 | 6.57 | 5.12 |
| 1985 | 1.28 | 2.49 | 1.76 | 0.83 | 5.36 | 2.85 | 4.70 | 4.24 | 6.39 | 1.79 | 6.12 | 1.43 |
| 1984 | 1.61 | 4.24 | 5.20 | 4.24 | 7.27 | 4.14 | 8.36 | 2.89 | 1.99 | 3.29 | 2.53 | 2.25 |
| 1983 | 2.97 | 3.25 | 5.78 | 8.56 | 5.43 | 3.30 | 1.06 | 2.49 | 2.12 | 5.13 | 6.31 | 7.86 |
| 1982 | 4.17 | 2.98 | 2.28 | 5.72 | 3.60 | 8.00 | 2.95 | 2.72 | 2.91 | 1.62 | 3.86 | 1.90 |
| 1981 | 0.49 | 4.24 | 1.48 | 3.99 | 4.33 | 4.38 | 4.18 | 2.69 | 3.47 | 3.27 | 1.53 | 3.48 |
| 1980 | 1.63 | 0.82 | 6.14 | 4.73 | 4.04 | 3.15 | 2.98 | 1.87 | 1.86 | 3.93 | 3.29 | 0.65 |
| 1979 | 9.58 | 5.32 | 2.21 | 3.85 | 5.32 | 3.36 | 4.52 | 4.08 | 7.63 | 5.21 | 3.19 | 1.81 |
| 1978 | 8.27 | 1.39 | 4.40 | 1.79 | 6.04 | 3.23 | 5.08 | 6.00 | 1.55 | 1.92 | 2.23 | 5.11 |

| | | | | | | | | | | | | |
|---|---|---|---|---|---|---|---|---|---|---|---|---|
| 1977 | 2.00 | 1.56 | 5.45 | 4.85 | 1.20 | 4.53 | 2.59 | 5.66 | 3.94 | 3.83 | 6.27 | 5.86 |
| 1976 | 5.14 | 1.99 | 2.14 | 2.22 | 4.09 | 3.81 | 5.01 | 3.92 | 3.25 | 6.21 | 0.53 | 1.92 |
| 1975 | 4.35 | 3.05 | 4.40 | 3.49 | 4.75 | 8.15 | 8.51 | 2.45 | 8.68 | 3.67 | 3.20 | 2.56 |
| 1974 | 3.46 | 1.60 | 4.38 | 3.65 | 4.01 | 4.25 | 2.33 | 4.43 | 5.50 | 1.84 | 1.49 | 4.08 |
| 1973 | 3.96 | 2.92 | 2.99 | 7.00 | 5.06 | 6.11 | 2.63 | 3.41 | 4.07 | 2.84 | 1.02 | 7.52 |
| 1972 | 2.48 | 4.75 | 2.82 | 4.02 | 4.64 | 10.43 | 3.21 | 1.77 | 1.34 | 3.77 | 8.43 | 5.67 |
| 1971 | 2.59 | 5.45 | 2.76 | 2.03 | 5.75 | 1.41 | 5.15 | 9.30 | 6.12 | 3.96 | 5.13 | 1.36 |
| 1970 | 0.89 | 2.38 | 3.74 | 5.37 | 2.37 | 4.94 | 5.17 | 3.96 | 1.47 | 3.91 | 5.51 | 3.13 |
| 1969 | 1.35 | 1.46 | 2.18 | 2.53 | 2.47 | 4.76 | 8.97 | 2.99 | 3.73 | 1.32 | 2.46 | 6.37 |
| 1968 | 2.32 | 0.89 | 4.11 | 2.15 | 6.44 | 5.49 | 2.13 | 2.06 | 2.77 | 3.24 | 3.91 | 2.71 |
| 1967 | 1.70 | 1.92 | 5.04 | 2.70 | 4.01 | 2.81 | 6.31 | 7.24 | 2.00 | 2.59 | 2.39 | 5.31 |
| 1966 | 3.94 | 3.94 | 1.68 | 3.68 | 3.08 | 0.78 | 2.74 | 2.00 | 6.67 | 3.83 | 2.81 | 3.97 |
| 1965 | 2.50 | 2.89 | 2.96 | 1.88 | 1.78 | 1.92 | 4.22 | 3.92 | 3.10 | 2.60 | 1.60 | 1.47 |
| 1964 | 4.27 | 3.07 | 2.02 | 5.93 | 1.00 | 1.90 | 4.35 | 1.11 | 2.88 | 1.84 | 2.20 | 4.71 |
| 1963 | 2.14 | 2.08 | 3.93 | 0.82 | 1.89 | 2.82 | 2.48 | 3.22 | 5.11 | 0.09 | 6.78 | 1.88 |
| 1962 | 2.47 | 3.93 | 3.34 | 4.00 | 1.93 | 3.90 | 1.22 | 4.89 | 3.56 | 2.31 | 4.91 | 2.56 |
| 1961 | 2.88 | 3.07 | 4.54 | 5.47 | 2.98 | 3.17 | 6.88 | 3.61 | 1.78 | 1.70 | 2.77 | 3.17 |
| 1960 | 3.15 | 3.73 | 1.88 | 3.45 | 5.59 | 2.56 | 6.06 | 3.45 | 8.59 | 2.11 | 2.16 | 2.60 |
| 1959 | 2.27 | 1.87 | 3.24 | 2.90 | 1.41 | 4.39 | 4.90 | 5.26 | 2.73 | 4.41 | 3.31 | 3.97 |
| 1958 | 4.21 | 4.11 | 5.26 | 4.91 | 3.57 | 3.45 | 6.50 | 4.50 | 3.42 | 3.61 | 3.29 | 1.23 |
| 1957 | 1.69 | 2.71 | 2.72 | 4.92 | 1.42 | 2.85 | 1.36 | 1.46 | 3.33 | 2.22 | 3.43 | 5.70 |
| 1956 | 2.39 | 4.31 | 5.04 | 2.88 | 2.77 | 4.08 | 5.02 | 3.16 | 3.60 | 3.45 | 4.28 | 3.69 |
| 1955 | 0.53 | 2.68 | 4.92 | 2.44 | 1.60 | 4.61 | 1.11 | 12.54 | 2.01 | 5.27 | 1.48 | 0.25 |
| 1954 | 1.79 | 1.44 | 3.97 | 3.38 | 3.27 | 1.64 | 1.54 | 6.43 | 2.46 | 3.01 | 3.89 | 2.91 |
| 1953 | 5.33 | 2.49 | 5.98 | 4.74 | 7.17 | 3.60 | 3.72 | 1.90 | 3.13 | 3.63 | 2.39 | 4.66 |
| 1952 | 4.85 | 1.87 | 4.96 | 7.40 | 5.56 | 2.34 | 5.22 | 4.65 | 5.04 | 1.01 | 5.50 | 4.15 |
| 1951 | 3.48 | 3.75 | 3.99 | 2.68 | 2.99 | 5.00 | 2.86 | 1.94 | 2.49 | 3.11 | 6.41 | 5.07 |
| 1950 | 2.10 | 3.84 | 4.97 | 1.79 | 4.60 | 2.45 | 4.54 | 4.59 | 3.69 | 2.57 | 5.44 | 3.48 |
| 1949 | 5.88 | 3.24 | 2.02 | 3.55 | 4.37 | 0.60 | 6.10 | 3.08 | 3.28 | 2.86 | 1.22 | 3.42 |
| 1948 | 4.27 | 2.37 | 3.54 | 3.80 | 7.81 | 4.79 | 3.45 | 4.77 | 2.11 | 2.18 | 4.64 | 5.07 |
| 1947 | 3.56 | 1.93 | 2.20 | 3.39 | 7.21 | 4.11 | 4.54 | 3.56 | 2.68 | 1.75 | 6.09 | 1.65 |
| 1946 | 1.31 | 2.16 | 3.32 | 1.12 | 6.96 | 7.17 | 5.03 | 4.45 | 2.84 | 2.39 | 1.14 | 2.39 |
| 1945 | 3.45 | 2.71 | 2.05 | 3.78 | 4.91 | 4.74 | 8.56 | 4.20 | 5.44 | 1.92 | 5.39 | 4.24 |
| 1944 | 2.97 | 1.89 | 5.67 | 5.11 | 2.57 | 4.25 | 1.14 | 2.72 | 5.80 | 2.34 | 4.39 | 3.43 |
| 1943 | 2.70 | 1.75 | 2.92 | 2.99 | 5.96 | 3.68 | 3.57 | 1.52 | 0.73 | 7.24 | 3.65 | 1.23 |
| 1942 | 2.38 | 2.42 | 4.87 | 1.45 | 4.46 | 3.72 | 5.97 | 8.02 | 3.47 | 4.19 | 3.33 | 4.80 |
| 1941 | 3.02 | 1.89 | 2.64 | 2.27 | 1.56 | 4.34 | 6.41 | 3.39 | 0.66 | 1.56 | 2.68 | 3.83 |
| 1940 | 1.44 | 2.87 | 5.31 | 6.14 | 4.52 | 2.56 | 3.08 | 5.72 | 4.22 | 2.49 | 4.61 | 2.94 |
| 1939 | 3.65 | 5.47 | 3.55 | 4.90 | 1.38 | 4.31 | 2.40 | 6.28 | 2.13 | 4.58 | 0.86 | 2.01 |
| 1938 | 2.63 | 2.24 | 2.28 | 2.16 | 3.38 | 7.88 | 7.63 | 3.82 | 6.64 | 2.52 | 3.18 | 3.00 |
| 1937 | 5.71 | 2.38 | 2.19 | 4.42 | 3.14 | 4.19 | 3.45 | 6.31 | 1.16 | 6.01 | 3.43 | 1.34 |
| 1936 | 6.46 | 3.08 | 5.78 | 2.95 | 2.01 | 4.95 | 2.68 | 4.67 | 2.40 | 2.72 | 1.01 | 5.66 |
| 1935 | 3.55 | 2.50 | 2.44 | 3.13 | 1.85 | 4.48 | 5.43 | 2.98 | 5.58 | 3.30 | 5.20 | 2.02 |
| 1934 | 3.10 | 2.07 | 3.57 | 3.31 | 4.27 | 3.89 | 4.19 | 4.24 | 8.28 | 1.59 | 3.63 | 2.80 |

| | | | | | | | | | | | | |
|---|---|---|---|---|---|---|---|---|---|---|---|---|
| 1933 | 2.02 | 2.92 | 5.31 | 5.10 | 5.63 | 2.97 | 5.81 | 11.53 | 4.40 | 1.94 | 0.83 | 2.29 |
| 1932 | 4.39 | 1.62 | 6.12 | 1.98 | 3.72 | 3.34 | 2.66 | 3.60 | 1.52 | 6.44 | 6.65 | 2.63 |
| 1931 | 1.97 | 1.76 | 3.82 | 2.38 | 4.10 | 4.08 | 6.94 | 5.10 | 1.83 | 2.29 | 0.82 | 2.00 |
| 1930 | 2.18 | 2.52 | 2.37 | 2.49 | 2.02 | 4.29 | 2.74 | 1.98 | 1.58 | 1.26 | 2.06 | 2.43 |
| 1929 | 3.06 | 3.51 | 2.74 | 6.42 | 3.25 | 2.98 | 1.47 | 1.93 | 4.07 | 4.69 | 2.37 | 2.59 |
| 1928 | 1.98 | 3.55 | 2.83 | 5.22 | 1.85 | 7.14 | 5.89 | 6.11 | 3.90 | 0.84 | 1.49 | 1.02 |
| 1927 | 1.66 | 3.06 | 1.35 | 3.45 | 3.07 | 3.20 | 5.03 | 6.84 | 1.89 | 7.30 | 2.70 | 3.89 |
| 1926 | 2.49 | 4.19 | 1.83 | 1.88 | 1.49 | 2.69 | 4.33 | 5.68 | 4.68 | 3.25 | 4.23 | 2.84 |
| 1925 | 4.13 | 1.69 | 2.68 | 2.10 | 2.15 | 2.75 | 6.43 | 1.58 | 1.84 | 3.91 | 2.87 | 2.23 |
| 1924 | 4.22 | 3.58 | 2.91 | 5.67 | 5.83 | 4.67 | 2.42 | 3.94 | 5.91 | 0.35 | 1.48 | 1.95 |
| 1923 | 4.70 | 2.29 | 3.37 | 3.54 | 1.89 | 1.71 | 3.83 | 1.75 | 3.45 | 3.20 | 2.21 | 3.64 |
| 1922 | 2.64 | 2.54 | 4.30 | 2.21 | 3.17 | 5.91 | 5.05 | 3.21 | 1.73 | 1.69 | 0.59 | 3.20 |
| 1921 | 2.16 | 3.21 | 2.29 | 3.34 | 4.55 | 2.98 | 3.79 | 3.42 | 3.60 | 0.91 | 4.07 | 2.03 |
| 1920 | 1.90 | 3.48 | 3.11 | 4.91 | 1.69 | 5.87 | 4.96 | 5.14 | 3.63 | 1.39 | 3.36 | 4.36 |
| 1919 | 2.92 | 2.82 | 4.18 | 2.92 | 5.08 | 3.13 | 7.39 | 5.71 | 2.41 | 2.83 | 3.81 | 2.44 |
| 1918 | 3.80 | 1.74 | 2.31 | 4.88 | 4.22 | 3.25 | 3.43 | 2.06 | 3.37 | 1.28 | 1.51 | 3.54 |
| 1917 | 2.85 | 1.55 | 4.47 | 2.28 | 2.78 | 4.59 | 4.87 | 3.50 | 2.55 | 6.17 | 0.40 | 2.41 |
| 1916 | 0.85 | 3.45 | 3.60 | 3.40 | 3.08 | 4.72 | 5.21 | 1.05 | 3.26 | 1.52 | 1.83 | 3.64 |
| 1915 | 6.57 | 4.86 | 0.82 | 1.97 | 3.51 | 3.28 | 4.60 | 7.36 | 1.73 | 2.48 | 1.41 | 4.15 |
| 1914 | 4.00 | 2.65 | 2.82 | 3.84 | 2.35 | 2.90 | 4.77 | 2.74 | 0.58 | 1.58 | 2.00 | 4.50 |
| 1913 | 3.00 | 1.91 | 4.45 | 5.21 | 3.39 | 1.66 | 2.67 | 3.17 | 3.35 | 6.15 | 2.09 | 2.57 |
| 1912 | 2.07 | 2.18 | 6.72 | 3.28 | 3.51 | 2.11 | 4.32 | 3.44 | 5.75 | 2.67 | 2.36 | 3.86 |
| 1911 | 2.87 | 2.28 | 2.75 | 3.61 | 0.92 | 5.15 | 3.02 | 8.31 | 3.61 | 4.23 | 3.83 | 3.20 |
| 1910 | 4.92 | 2.82 | 0.64 | 6.01 | 2.55 | 4.93 | 1.30 | 3.09 | 2.87 | 2.31 | 2.66 | 2.19 |
| 1909 | 2.81 | 4.51 | 3.25 | 4.98 | 2.58 | 3.25 | 1.48 | 3.13 | 2.96 | 1.33 | 1.26 | 3.66 |
| 1908 | 3.36 | 4.51 | 3.19 | 2.29 | 6.27 | 2.02 | 4.54 | 4.11 | 2.19 | 2.42 | 0.61 | 2.79 |
| 1907 | 3.04 | 2.32 | 3.03 | 3.59 | 3.87 | 4.44 | 2.74 | 2.78 | 7.30 | 3.18 | 4.87 | 4.23 |
| 1906 | 2.35 | 2.09 | 4.71 | 3.71 | 2.87 | 4.93 | 4.75 | 5.42 | 1.69 | 4.53 | 0.94 | 3.53 |
| 1905 | 3.94 | 2.07 | 3.72 | 2.71 | 1.82 | 3.38 | 4.97 | 5.18 | 3.49 | 2.64 | 1.53 | 3.22 |
| 1904 | 3.13 | 1.98 | 3.09 | 3.18 | 2.51 | 3.30 | 4.68 | 5.61 | 4.03 | 3.31 | 1.69 | 2.41 |
| 1903 | 3.89 | 4.55 | 4.92 | 4.03 | 1.20 | 7.51 | 5.65 | 6.53 | 2.57 | 6.47 | 1.10 | 2.86 |
| 1902 | 3.01 | 5.46 | 4.15 | 3.11 | 1.49 | 6.34 | 4.85 | 3.15 | 5.41 | 6.05 | 1.95 | 6.20 |
| 1901 | 2.22 | 0.61 | 4.24 | 6.19 | 4.75 | 1.48 | 5.21 | 8.48 | 3.29 | 1.56 | 2.39 | 6.70 |
| 1900 | 3.01 | 4.97 | 3.43 | 1.96 | 2.69 | 2.97 | 4.37 | 2.92 | 2.63 | 2.84 | 2.77 | 2.12 |
| 1899 | 3.27 | 5.50 | 5.57 | 1.55 | 2.70 | 2.45 | 4.44 | 3.93 | 5.64 | 2.11 | 2.13 | 1.95 |

## *Division Yearly Snowfall*

*The snowfall data is reported in inches*

| Year | January | February | March | April | May | June | July | August | September | October | November | December | Yearly |
|---|---|---|---|---|---|---|---|---|---|---|---|---|---|
| 2013 | 2.2 | 3.6 | 3.1 | 0.0 | 0.0 | 0.0 | 0.0 | 0.0 | 0.0 | | | | 8.87 |
| 2012 | 2.9 | 1.9 | 0.0 | 0.0 | 0.0 | 0.0 | 0.0 | 0.0 | 0.0 | 0.0 | 1.0 | 4.3 | 10.15 |
| 2011 | 20.4 | 3.9 | 0.4 | 0.3 | 0.0 | 0.0 | 0.0 | 0.0 | 0.0 | 4.9 | 0.0 | 0.1 | 29.9 |
| 2010 | 1.6 | 34.5 | 0.0 | 0.0 | 0.0 | 0.0 | 0.0 | 0.0 | 0.0 | 0.0 | 0.1 | 3.3 | 39.5 |
| 2009 | 5.1 | 3.2 | 4.0 | 0.0 | 0.0 | 0.0 | 0.0 | 0.0 | 0.0 | 0.0 | 0.0 | 12.4 | 24.7 |
| 2008 | 1.7 | 3.9 | 0.3 | 0.0 | 0.0 | 0.0 | 0.0 | 0.0 | 0.0 | 0.1 | 0.7 | 1.2 | 7.9 |
| 2007 | 1.5 | 8.0 | 7.6 | 0.3 | 0.0 | 0.0 | 0.0 | 0.0 | 0.0 | 0.0 | 0.6 | 2.4 | 20.4 |
| 2006 | 0.1 | 11.8 | 0.0 | 0.2 | 0.0 | 0.0 | 0.0 | 0.0 | 0.0 | 0.0 | 0.0 | 0.0 | 12.1 |
| 2005 | 11.9 | 9.6 | 6.0 | 0.0 | 0.0 | 0.0 | 0.0 | 0.0 | 0.0 | 0.0 | 0.3 | 8.7 | 36.5 |
| 2004 | 11.2 | 1.2 | 6.0 | 0.0 | 0.0 | 0.0 | 0.0 | 0.0 | 0.0 | 0.0 | 0.0 | 0.2 | 18.6 |
| 2003 | 7.1 | 30.6 | 0.6 | 2.4 | 0.0 | 0.0 | 0.0 | 0.0 | 0.0 | 0.0 | 0.0 | 10.1 | 50.8 |
| 2002 | 6.4 | 0.4 | 0.3 | 0.2 | 0.0 | 0.0 | 0.0 | 0.0 | 0.0 | 0.1 | 0.8 | 12.4 | 20.6 |
| 2001 | 5.9 | 10.5 | 2.4 | 0.4 | 0.0 | 0.0 | 0.0 | 0.0 | 0.0 | 0.0 | 0.0 | 0.0 | 19.2 |
| 2000 | 16.4 | 4.8 | 0.0 | 1.4 | 0.0 | 0.0 | 0.0 | 0.0 | 0.0 | 0.0 | 0.0 | 5.3 | 27.9 |
| 1999 | 3.5 | 0.9 | 5.4 | 0.0 | 0.0 | 0.0 | 0.0 | 0.0 | 0.0 | 0.0 | 0.0 | 0.0 | 9.8 |
| 1998 | 1.8 | 0.1 | 0.6 | 0.0 | 0.0 | 0.0 | 0.0 | 0.0 | 0.0 | 0.0 | 0.0 | 0.6 | 3.1 |
| 1997 | 1.8 | 4.5 | 4.4 | 2.7 | 0.0 | 0.0 | 0.0 | 0.0 | 0.0 | 0.0 | 0.0 | 1.4 | 14.8 |
| 1996 | 31.5 | 11.0 | 4.1 | 1.0 | 0.0 | 0.0 | 0.0 | 0.0 | 0.0 | 0.0 | 0.1 | 0.9 | 48.6 |
| 1995 | 0.3 | 8.4 | 1.0 | 0.0 | 0.0 | 0.0 | 0.0 | 0.0 | 0.0 | 0.0 | 3.5 | 13.0 | 26.2 |
| 1994 | 20.5 | 19.4 | 9.6 | 0.0 | 0.0 | 0.0 | 0.0 | 0.0 | 0.0 | 0.0 | 0.1 | 0.0 | 49.6 |
| 1993 | 1.3 | 15.4 | 17.0 | 0.1 | 0.0 | 0.0 | 0.0 | 0.0 | 0.0 | 0.0 | 0.0 | 0.9 | 34.7 |
| 1992 | 1.8 | 2.3 | 5.7 | 0.0 | 0.0 | 0.0 | 0.0 | 0.0 | 0.0 | 0.0 | 0.0 | 1.7 | 11.5 |
| 1991 | 5.2 | 0.5 | 2.4 | 0.0 | 0.0 | 0.0 | 0.0 | 0.0 | 0.0 | 0.0 | 0.0 | 0.2 | 8.3 |
| 1990 | 5.3 | 0.9 | 1.5 | 0.8 | 0.0 | 0.0 | 0.0 | 0.0 | 0.0 | 0.0 | 0.0 | 7.7 | 16.2 |
| 1989 | 6.8 | 1.4 | 4.4 | 0.0 | 0.0 | 0.0 | 0.0 | 0.0 | 0.0 | 0.0 | 3.8 | 6.2 | 22.6 |
| 1988 | 11.0 | 1.7 | 0.0 | 0.0 | 0.0 | 0.0 | 0.0 | 0.0 | 0.0 | 0.0 | 0.0 | 0.3 | 13 |
| 1987 | 19.8 | 10.8 | 0.9 | 0.0 | 0.0 | 0.0 | 0.0 | 0.0 | 0.0 | 0.0 | 3.8 | 2.6 | 37.9 |
| 1986 | 4.3 | 15.3 | 0.1 | 0.9 | 0.0 | 0.0 | 0.0 | 0.0 | 0.0 | 0.0 | 0.1 | 1.9 | 22.6 |
| 1985 | 10.0 | 8.7 | 0.1 | 0.7 | 0.0 | 0.0 | 0.0 | 0.0 | 0.0 | 0.0 | 0.1 | 3.0 | 22.6 |
| 1984 | 12.4 | 0.2 | 14.8 | 0.0 | 0.0 | 0.0 | 0.0 | 0.0 | 0.0 | 0.0 | 0.1 | 1.9 | 29.4 |
| 1983 | 4.7 | 25.4 | 2.8 | 4.4 | 0.0 | 0.0 | 0.0 | 0.0 | 0.0 | 0.0 | 0.7 | 3.0 | 41 |
| 1982 | 12.8 | 4.4 | 2.6 | 8.4 | 0.0 | 0.0 | 0.0 | 0.0 | 0.0 | 0.0 | 0.0 | 3.7 | 31.9 |
| 1981 | 6.2 | 0.6 | 7.8 | 0.0 | 0.0 | 0.0 | 0.0 | 0.0 | 0.0 | 0.0 | 0.0 | 7.5 | 22.1 |
| 1980 | 3.4 | 1.0 | 6.4 | 0.4 | 0.0 | 0.0 | 0.0 | 0.0 | 0.0 | 0.0 | 1.1 | 3.5 | 15.8 |
| 1979 | 9.7 | 25.8 | 0.0 | 0.0 | 0.0 | 0.0 | 0.0 | 0.0 | 0.0 | 0.5 | 0.0 | 2.9 | 38.9 |
| 1978 | 23.6 | 21.3 | 7.9 | 0.0 | 0.0 | 0.0 | 0.0 | 0.0 | 0.0 | 0.0 | 3.2 | 0.1 | 56.1 |
| 1977 | 14.8 | 1.9 | 0.2 | 0.0 | 0.0 | 0.0 | 0.0 | 0.0 | 0.0 | 0.0 | 0.2 | 0.9 | 18 |
| 1976 | 6.9 | 2.4 | 6.6 | 0.0 | 0.0 | 0.0 | 0.0 | 0.0 | 0.0 | 0.0 | 0.2 | 3.5 | 19.6 |

| | | | | | | | | | | | | | |
|---|---|---|---|---|---|---|---|---|---|---|---|---|---|
| 1975 | 6.6 | 9.3 | 2.1 | 0.0 | 0.0 | 0.0 | 0.0 | 0.0 | 0.0 | 0.0 | 0.0 | 0.8 | 18.8 |
| 1974 | 5.2 | 9.9 | 0.0 | 0.0 | 0.0 | 0.0 | 0.0 | 0.0 | 0.0 | 0.0 | 0.0 | 0.2 | 15.3 |
| 1973 | 0.4 | 0.3 | 0.0 | 0.0 | 0.0 | 0.0 | 0.0 | 0.0 | 0.0 | 0.0 | 0.0 | 7.5 | 8.2 |
| 1972 | 2.9 | 14.6 | 0.4 | 0.2 | 0.0 | 0.0 | 0.0 | 0.0 | 0.0 | 0.7 | 0.3 | 0.4 | 19.5 |
| 1971 | 9.4 | 0.9 | 4.2 | 1.1 | 0.0 | 0.0 | 0.0 | 0.0 | 0.0 | 0.0 | 1.2 | 0.1 | 16.9 |
| 1970 | 8.5 | 4.3 | 3.6 | 0.0 | 0.0 | 0.0 | 0.0 | 0.0 | 0.0 | 0.0 | 0.0 | 2.4 | 18.8 |
| 1969 | 2.0 | 9.8 | 8.8 | 0.0 | 0.0 | 0.0 | 0.0 | 0.0 | 0.0 | 0.0 | 0.2 | 13.5 | 34.3 |
| 1968 | 5.5 | 0.9 | 2.4 | 0.0 | 0.0 | 0.0 | 0.0 | 0.0 | 0.0 | 0.0 | 2.3 | 1.5 | 12.6 |
| 1967 | 0.5 | 17.8 | 8.6 | 0.3 | 0.0 | 0.0 | 0.0 | 0.0 | 0.0 | 0.0 | 2.7 | 5.6 | 35.5 |
| 1966 | 22.3 | 12.2 | 0.0 | 0.0 | 0.0 | 0.0 | 0.0 | 0.0 | 0.0 | 0.0 | 0.0 | 26.3 | 60.8 |
| 1965 | 12.9 | 1.9 | 7.1 | 1.7 | 0.0 | 0.0 | 0.0 | 0.0 | 0.0 | 0.0 | 0.0 | 0.0 | 23.6 |
| 1964 | 11.9 | 18.6 | 7.7 | 0.2 | 0.0 | 0.0 | 0.0 | 0.0 | 0.0 | 0.0 | 0.0 | 1.7 | 40.1 |
| 1963 | 6.4 | 7.6 | 1.1 | 0.0 | 0.0 | 0.0 | 0.0 | 0.0 | 0.0 | 0.0 | 0.0 | 10.8 | 25.9 |
| 1962 | 0.8 | 12.3 | 6.6 | 0.0 | 0.0 | 0.0 | 0.0 | 0.0 | 0.0 | 0.2 | 1.0 | 11.0 | 31.9 |
| 1961 | 19.9 | 15.5 | 0.6 | 0.5 | 0.0 | 0.0 | 0.0 | 0.0 | 0.0 | 0.0 | 2.9 | 7.4 | 46.8 |
| 1960 | 0.5 | 5.6 | 13.7 | 0.0 | 0.0 | 0.0 | 0.0 | 0.0 | 0.0 | 0.0 | 0.0 | 13.9 | 33.7 |
| 1959 | 2.5 | 0.8 | 3.4 | 1.4 | 0.0 | 0.0 | 0.0 | 0.0 | 0.0 | 0.0 | 0.0 | 8.1 | 16.2 |
| 1958 | 4.1 | 16.6 | 24.6 | 0.0 | 0.0 | 0.0 | 0.0 | 0.0 | 0.0 | 0.0 | 0.1 | 0.9 | 46.3 |
| 1957 | 4.6 | 6.0 | 1.2 | 0.1 | 0.0 | 0.0 | 0.0 | 0.0 | 0.0 | 0.0 | 0.2 | 9.0 | 21.1 |
| 1956 | 5.9 | 1.6 | 13.3 | 1.0 | 0.0 | 0.0 | 0.0 | 0.0 | 0.0 | 0.0 | 0.0 | 0.1 | 21.9 |
| 1955 | 3.4 | 7.3 | 1.9 | 0.0 | 0.0 | 0.0 | 0.0 | 0.0 | 0.0 | 0.0 | 2.9 | 2.3 | 17.8 |
| 1954 | 11.7 | 1.8 | 0.2 | 0.1 | 0.0 | 0.0 | 0.0 | 0.0 | 0.0 | 0.0 | 0.0 | 1.1 | 14.9 |
| 1953 | 5.5 | 1.1 | 5.3 | 0.0 | 0.0 | 0.0 | 0.0 | 0.0 | 0.0 | 0.0 | 8.8 | 0.0 | 20.7 |
| 1952 | 3.2 | 0.1 | 7.9 | 0.0 | 0.0 | 0.0 | 0.0 | 0.0 | 0.0 | 0.0 | 1.9 | 3.1 | 16.2 |
| 1951 | 2.1 | 1.7 | 0.6 | 0.0 | 0.0 | 0.0 | 0.0 | 0.0 | 0.0 | 0.0 | 0.0 | 10.0 | 14.4 |
| 1950 | 0.3 | 1.9 | 0.4 | 0.0 | 0.0 | 0.0 | 0.0 | 0.0 | 0.0 | 0.0 | 1.0 | 2.2 | 5.8 |

**** Prior to September of 1956 only three climate divisions existed in Pennsylvania; therefore, snowfall values for January 1950 through August 1956 are estimates.****

## *Division Seasonal Snowfall*

*The snowfall data is reported in inches*

| Season | September | October | November | December | January | February | March | April | May | Seasonal |
|---|---|---|---|---|---|---|---|---|---|---|
| 2013 - 2014 | 0.0 | | | | | | | | | 0.0 |
| 2012 - 2013 | 0.0 | 0.0 | 1.0 | 4.3 | 2.9 | 1.9 | 0.0 | 0.0 | 0.0 | 10.1 |
| 2011 - 2012 | 0.0 | 4.9 | 0.0 | 0.1 | 20.4 | 3.9 | 0.4 | 0.3 | 0.0 | 30.0 |
| 2010 - 2011 | 0.0 | 0.0 | 0.1 | 3.3 | 1.6 | 34.5 | 0.0 | 0.0 | 0.0 | 39.5 |
| 2009 - 2010 | 0.0 | 0.0 | 0.0 | 12.4 | 5.1 | 3.2 | 4.0 | 0.0 | 0.0 | 24.7 |
| 2008 - 2009 | 0.0 | 0.1 | 0.7 | 1.2 | 1.7 | 3.9 | 0.3 | 0.0 | 0.0 | 7.9 |
| 2007 - 2008 | 0.0 | 0.0 | 0.6 | 2.4 | 1.5 | 8.0 | 7.6 | 0.3 | 0.0 | 20.4 |
| 2006 - 2007 | 0.0 | 0.0 | 0.0 | 0.0 | 0.1 | 11.8 | 0.0 | 0.2 | 0.0 | 12.1 |
| 2005 - 2006 | 0.0 | 0.0 | 0.3 | 8.7 | 11.9 | 9.6 | 6.0 | 0.0 | 0.0 | 36.5 |
| 2004 - 2005 | 0.0 | 0.0 | 0.0 | 0.2 | 11.2 | 1.2 | 6.0 | 0.0 | 0.0 | 18.6 |
| 2003 - 2004 | 0.0 | 0.0 | 0.0 | 10.1 | 7.1 | 30.6 | 0.6 | 2.4 | 0.0 | 50.8 |
| 2002 - 2003 | 0.0 | 0.1 | 0.8 | 12.4 | 6.4 | 0.4 | 0.3 | 0.2 | 0.0 | 20.6 |
| 2001 - 2002 | 0.0 | 0.0 | 0.0 | 0.0 | 5.9 | 10.5 | 2.4 | 0.4 | 0.0 | 19.2 |
| 2000 - 2001 | 0.0 | 0.0 | 0.0 | 5.3 | 16.4 | 4.8 | 0.0 | 1.4 | 0.0 | 27.9 |
| 1999 - 2000 | 0.0 | 0.0 | 0.0 | 0.0 | 3.5 | 0.9 | 5.4 | 0.0 | 0.0 | 9.8 |
| 1998 - 1999 | 0.0 | 0.0 | 0.0 | 0.6 | 1.8 | 0.1 | 0.6 | 0.0 | 0.0 | 3.1 |
| 1997 - 1998 | 0.0 | 0.0 | 0.0 | 1.4 | 1.8 | 4.5 | 4.4 | 2.7 | 0.0 | 14.8 |
| 1996 - 1997 | 0.0 | 0.0 | 0.1 | 0.9 | 31.5 | 11.0 | 4.1 | 1.0 | 0.0 | 48.6 |
| 1995 - 1996 | 0.0 | 0.0 | 3.5 | 13.0 | 0.3 | 8.4 | 1.0 | 0.0 | 0.0 | 26.2 |
| 1994 - 1995 | 0.0 | 0.0 | 0.1 | 0.0 | 20.5 | 19.4 | 9.6 | 0.0 | 0.0 | 49.6 |
| 1993 - 1994 | 0.0 | 0.0 | 0.0 | 0.9 | 1.3 | 15.4 | 17.0 | 0.1 | 0.0 | 34.7 |
| 1992 - | 0.0 | 0.0 | 0.0 | 1.7 | 1.8 | 2.3 | 5.7 | 0.0 | 0.0 | 11.5 |

| | | | | | | | | | | |
|---|---|---|---|---|---|---|---|---|---|---|
| 1993 | | | | | | | | | | |
| 1991 - 1992 | 0.0 | 0.0 | 0.0 | 0.2 | 5.2 | 0.5 | 2.4 | 0.0 | 0.0 | 8.3 |
| 1990 - 1991 | 0.0 | 0.0 | 0.0 | 7.7 | 5.3 | 0.9 | 1.5 | 0.8 | 0.0 | 16.2 |
| 1989 - 1990 | 0.0 | 0.0 | 3.8 | 6.2 | 6.8 | 1.4 | 4.4 | 0.0 | 0.0 | 22.6 |
| 1988 - 1989 | 0.0 | 0.0 | 0.0 | 0.3 | 11.0 | 1.7 | 0.0 | 0.0 | 0.0 | 13.0 |
| 1987 - 1988 | 0.0 | 0.0 | 3.8 | 2.6 | 19.8 | 10.8 | 0.9 | 0.0 | 0.0 | 37.9 |
| 1986 - 1987 | 0.0 | 0.0 | 0.1 | 1.9 | 4.3 | 15.3 | 0.1 | 0.9 | 0.0 | 22.6 |
| 1985 - 1986 | 0.0 | 0.0 | 0.1 | 3.0 | 10.0 | 8.7 | 0.1 | 0.7 | 0.0 | 22.6 |
| 1984 - 1985 | 0.0 | 0.0 | 0.1 | 1.9 | 12.4 | 0.2 | 14.8 | 0.0 | 0.0 | 29.4 |
| 1983 - 1984 | 0.0 | 0.0 | 0.7 | 3.0 | 4.7 | 25.4 | 2.8 | 4.4 | 0.0 | 41.0 |
| 1982 - 1983 | 0.0 | 0.0 | 0.0 | 3.7 | 12.8 | 4.4 | 2.6 | 8.4 | 0.0 | 31.9 |
| 1981 - 1982 | 0.0 | 0.0 | 0.0 | 7.5 | 6.2 | 0.6 | 7.8 | 0.0 | 0.0 | 22.1 |
| 1980 - 1981 | 0.0 | 0.0 | 1.1 | 3.5 | 3.4 | 1.0 | 6.4 | 0.4 | 0.0 | 15.8 |
| 1979 - 1980 | 0.0 | 0.5 | 0.0 | 2.9 | 9.7 | 25.8 | 0.0 | 0.0 | 0.0 | 38.9 |
| 1978 - 1979 | 0.0 | 0.0 | 3.2 | 0.1 | 23.6 | 21.3 | 7.9 | 0.0 | 0.0 | 56.1 |
| 1977 - 1978 | 0.0 | 0.0 | 0.2 | 0.9 | 14.8 | 1.9 | 0.2 | 0.0 | 0.0 | 18.0 |
| 1976 - 1977 | 0.0 | 0.0 | 0.2 | 3.5 | 6.9 | 2.4 | 6.6 | 0.0 | 0.0 | 19.6 |
| 1975 - 1976 | 0.0 | 0.0 | 0.0 | 0.8 | 6.6 | 9.3 | 2.1 | 0.0 | 0.0 | 18.8 |
| 1974 - 1975 | 0.0 | 0.0 | 0.0 | 0.2 | 5.2 | 9.9 | 0.0 | 0.0 | 0.0 | 15.3 |
| 1973 - 1974 | 0.0 | 0.0 | 0.0 | 7.5 | 0.4 | 0.3 | 0.0 | 0.0 | 0.0 | 8.2 |
| 1972 - 1973 | 0.0 | 0.7 | 0.3 | 0.4 | 2.9 | 14.6 | 0.4 | 0.2 | 0.0 | 19.5 |
| 1971 - 1972 | 0.0 | 0.0 | 1.2 | 0.1 | 9.4 | 0.9 | 4.2 | 1.1 | 0.0 | 16.9 |
| 1970 - 1971 | 0.0 | 0.0 | 0.0 | 2.4 | 8.5 | 4.3 | 3.6 | 0.0 | 0.0 | 18.8 |
| 1969 - 1970 | 0.0 | 0.0 | 0.2 | 13.5 | 2.0 | 9.8 | 8.8 | 0.0 | 0.0 | 34.3 |
| 1968 - 1969 | 0.0 | 0.0 | 2.3 | 1.5 | 5.5 | 0.9 | 2.4 | 0.0 | 0.0 | 12.6 |
| 1967 - | 0.0 | 0.0 | 2.7 | 5.6 | 0.5 | 17.8 | 8.6 | 0.3 | 0.0 | 35.5 |

| | | | | | | | | | | |
|---|---|---|---|---|---|---|---|---|---|---|
| 1968 | | | | | | | | | | |
| 1966 - 1967 | 0.0 | 0.0 | 0.0 | 26.3 | 22.3 | 12.2 | 0.0 | 0.0 | 0.0 | 60.8 |
| 1965 - 1966 | 0.0 | 0.0 | 0.0 | 0.0 | 12.9 | 1.9 | 7.1 | 1.7 | 0.0 | 23.6 |
| 1964 - 1965 | 0.0 | 0.0 | 0.0 | 1.7 | 11.9 | 18.6 | 7.7 | 0.2 | 0.0 | 40.1 |
| 1963 - 1964 | 0.0 | 0.0 | 0.0 | 10.8 | 6.4 | 7.6 | 1.1 | 0.0 | 0.0 | 25.9 |
| 1962 - 1963 | 0.0 | 0.2 | 1.0 | 11.0 | 0.8 | 12.3 | 6.6 | 0.0 | 0.0 | 31.9 |
| 1961 - 1962 | 0.0 | 0.0 | 2.9 | 7.4 | 19.9 | 15.5 | 0.6 | 0.5 | 0.0 | 46.8 |
| 1960 - 1961 | 0.0 | 0.0 | 0.0 | 13.9 | 0.5 | 5.6 | 13.7 | 0.0 | 0.0 | 33.7 |
| 1959 - 1960 | 0.0 | 0.0 | 0.0 | 8.1 | 2.5 | 0.8 | 3.4 | 1.4 | 0.0 | 16.2 |
| 1958 - 1959 | 0.0 | 0.0 | 0.1 | 0.9 | 4.1 | 16.6 | 24.6 | 0.0 | 0.0 | 46.3 |
| 1957 - 1958 | 0.0 | 0.0 | 0.2 | 9.0 | 4.6 | 6.0 | 1.2 | 0.1 | 0.0 | 21.1 |
| 1956 - 1957 | 0.0 | 0.0 | 0.0 | 0.1 | 5.9 | 1.6 | 13.3 | 1.0 | 0.0 | 21.9 |
| 1955 - 1956 | 0.0 | 0.0 | 2.9 | 2.3 | 3.4 | 7.3 | 1.9 | 0.0 | 0.0 | 17.8 |
| 1954 - 1955 | 0.0 | 0.0 | 0.0 | 1.1 | 11.7 | 1.8 | 0.2 | 0.1 | 0.0 | 14.9 |
| 1953 - 1954 | 0.0 | 0.0 | 8.8 | 0.0 | 5.5 | 1.1 | 5.3 | 0.0 | 0.0 | 20.7 |
| 1952 - 1953 | 0.0 | 0.0 | 1.9 | 3.1 | 3.2 | 0.1 | 7.9 | 0.0 | 0.0 | 16.2 |
| 1951 - 1952 | 0.0 | 0.0 | 0.0 | 10.0 | 2.1 | 1.7 | 0.6 | 0.0 | 0.0 | 14.4 |
| 1950 - 1951 | 0.0 | 0.0 | 1.0 | 2.2 | 0.3 | 1.9 | 0.4 | 0.0 | 0.0 | 5.8 |

**** Prior to September of 1956 only three climate divisions existed in Pennsylvania; therefore, snowfall values for January 1950 through August 1956 are estimates.****

## *Division Average Temperature*

The temperature data is reported in degrees Farenheit
*Values since January 2011 are provisional

| Year | January | February | March | April | May | June | July | August | September | October | November | December |
|---|---|---|---|---|---|---|---|---|---|---|---|---|
| 2016 | 29.4 | 34.3 | 46.1 | 50.8 | 59.2 | 71.4 | | | | | | |
| 2015 | 27.4 | 22.1 | 35.6 | 51.8 | 67.5 | 70.6 | 75.0 | 73.6 | 70.2 | 54.9 | 49.6 | 46.2 |
| 2014 | 24.4 | 27.2 | 34.8 | 50.6 | 61.7 | 71.3 | 74.1 | 70.7 | 66.3 | 57.2 | 41.5 | 37.6 |
| 2013 | 33.5 | 32.2 | 38.3 | 52.3 | 61.4 | 71.5 | 77.6 | 71.2 | 64.0 | 56.6 | 42.0 | 35.0 |
| 2012 | 34.1 | 38.3 | 49.9 | 52.4 | 65.6 | 70.2 | 78.4 | 74.5 | 66.7 | 55.9 | 40.5 | 39.8 |
| 2011 | 26.4 | 33.1 | 41.0 | 54.4 | 64.2 | 72.2 | 78.7 | 73.0 | 67.9 | 54.6 | 48.2 | 40.1 |
| 2010 | 30.5 | 29.7 | 46.3 | 55.6 | 64.5 | 74.6 | 78.0 | 75.0 | 68.9 | 55.4 | 44.3 | 30.5 |
| 2009 | 25.5 | 34.2 | 41.1 | 53.0 | 62.1 | 69.1 | 71.8 | 74.9 | 64.6 | 53.0 | 48.4 | 33.3 |
| 2008 | 33.1 | 33.0 | 41.3 | 53.8 | 58.1 | 73.3 | 75.8 | 71.4 | 67.2 | 52.9 | 43.0 | 34.8 |
| 2007 | 35.1 | 25.0 | 40.3 | 48.3 | 63.6 | 72.0 | 73.6 | 74.3 | 68.4 | 61.6 | 42.8 | 34.6 |
| 2006 | 38.3 | 33.3 | 42.0 | 54.0 | 61.5 | 70.7 | 77.3 | 75.0 | 64.2 | 53.3 | 48.3 | 40.8 |
| 2005 | 29.6 | 33.5 | 36.7 | 53.1 | 57.4 | 73.2 | 76.8 | 76.6 | 70.6 | 56.4 | 46.6 | 31.0 |
| 2004 | 24.2 | 31.9 | 43.0 | 52.3 | 67.6 | 69.3 | 73.7 | 73.0 | 67.8 | 53.3 | 46.4 | 34.4 |
| 2003 | 25.8 | 27.4 | 41.1 | 49.9 | 58.1 | 67.8 | 75.0 | 75.3 | 66.3 | 52.6 | 48.2 | 34.8 |
| 2002 | 36.1 | 37.9 | 42.7 | 54.5 | 60.2 | 71.5 | 77.1 | 77.2 | 68.9 | 54.1 | 43.1 | 31.8 |
| 2001 | 29.0 | 34.5 | 37.9 | 51.5 | 62.2 | 71.7 | 72.1 | 76.2 | 64.9 | 55.3 | 48.5 | 40.4 |
| 2000 | 29.0 | 33.8 | 46.0 | 50.6 | 62.6 | 70.4 | 71.2 | 71.3 | 64.2 | 55.0 | 42.8 | 27.8 |
| 1999 | 31.6 | 34.8 | 39.3 | 51.3 | 61.5 | 71.0 | 78.8 | 73.8 | 66.9 | 52.7 | 48.4 | 36.7 |
| 1998 | 38.3 | 39.5 | 43.2 | 53.4 | 65.2 | 69.6 | 74.6 | 74.2 | 68.6 | 55.1 | 44.7 | 39.4 |
| 1997 | 29.2 | 37.3 | 41.6 | 49.1 | 57.5 | 68.9 | 74.2 | 71.4 | 64.6 | 54.8 | 41.7 | 35.2 |
| 1996 | 27.2 | 31.4 | 36.5 | 51.1 | 59.0 | 71.3 | 72.3 | 72.4 | 66.2 | 54.2 | 39.1 | 37.4 |
| 1995 | 34.5 | 28.2 | 43.4 | 49.7 | 59.8 | 70.0 | 76.1 | 75.2 | 65.5 | 57.9 | 39.7 | 29.2 |
| 1994 | 21.8 | 27.2 | 37.4 | 54.8 | 58.5 | 73.3 | 76.9 | 70.7 | 64.3 | 52.8 | 48.3 | 38.4 |
| 1993 | 34.0 | 27.6 | 35.8 | 50.2 | 62.7 | 70.0 | 76.2 | 74.0 | 64.8 | 52.0 | 43.3 | 33.0 |
| 1992 | 32.0 | 34.1 | 37.8 | 49.4 | 58.2 | 67.1 | 72.5 | 69.3 | 64.1 | 50.1 | 43.2 | 34.2 |
| 1991 | 31.1 | 36.7 | 42.9 | 52.7 | 67.2 | 71.6 | 75.5 | 74.6 | 64.3 | 54.7 | 43.3 | 35.9 |
| 1990 | 37.8 | 38.4 | 44.1 | 51.8 | 59.3 | 70.3 | 74.8 | 72.3 | 64.0 | 58.0 | 46.2 | 38.1 |
| 1989 | 33.8 | 31.6 | 39.4 | 48.8 | 59.6 | 71.3 | 73.7 | 72.0 | 66.1 | 55.5 | 42.6 | 22.3 |
| 1988 | 24.2 | 31.4 | 41.3 | 48.7 | 61.1 | 69.1 | 77.3 | 75.2 | 62.7 | 48.8 | 44.2 | 32.6 |
| 1987 | 29.0 | 30.2 | 43.2 | 51.1 | 62.2 | 71.8 | 76.6 | 71.6 | 65.0 | 49.1 | 44.2 | 36.1 |
| 1986 | 30.8 | 29.8 | 42.4 | 51.1 | 64.3 | 70.7 | 75.2 | 70.7 | 64.9 | 55.1 | 41.2 | 35.6 |
| 1985 | 26.0 | 32.8 | 42.5 | 53.9 | 62.9 | 67.1 | 73.5 | 72.2 | 66.7 | 56.2 | 48.2 | 30.5 |
| 1984 | 25.1 | 37.5 | 34.2 | 48.9 | 59.0 | 71.2 | 72.5 | 73.4 | 62.2 | 59.4 | 42.5 | 39.7 |
| 1983 | 31.6 | 32.3 | 42.0 | 49.0 | 59.1 | 70.0 | 75.6 | 75.2 | 66.8 | 54.8 | 44.7 | 30.7 |
| 1982 | 22.5 | 32.4 | 39.3 | 48.5 | 63.2 | 66.9 | 74.3 | 69.5 | 64.7 | 54.3 | 46.5 | 39.9 |
| 1981 | 24.3 | 36.6 | 38.7 | 53.5 | 61.3 | 70.6 | 74.8 | 71.3 | 64.4 | 50.9 | 43.6 | 32.1 |
| 1980 | 30.6 | 28.5 | 38.3 | 52.7 | 63.3 | 67.7 | 76.2 | 76.7 | 69.3 | 52.7 | 41.2 | 30.9 |
| 1979 | 29.3 | 21.8 | 44.1 | 49.9 | 62.3 | 67.4 | 73.2 | 72.7 | 65.3 | 52.8 | 48.3 | 36.5 |

| | | | | | | | | | | | | |
|---|---|---|---|---|---|---|---|---|---|---|---|---|
| 1978 | 26.4 | 23.6 | 37.6 | 50.3 | 59.6 | 70.0 | 72.5 | 75.3 | 65.4 | 53.0 | 45.4 | 36.2 |
| 1977 | 19.6 | 32.5 | 46.6 | 54.2 | 64.2 | 68.2 | 75.6 | 73.6 | 67.5 | 52.9 | 46.4 | 32.2 |
| 1976 | 26.9 | 39.2 | 44.9 | 54.8 | 60.1 | 73.0 | 72.7 | 72.1 | 64.7 | 50.6 | 38.9 | 28.8 |
| 1975 | 35.2 | 33.9 | 39.3 | 46.7 | 64.6 | 70.1 | 74.4 | 74.1 | 62.8 | 58.3 | 49.8 | 34.8 |
| 1974 | 34.3 | 31.3 | 41.7 | 53.3 | 60.3 | 67.4 | 74.2 | 73.6 | 64.8 | 51.6 | 45.8 | 37.4 |
| 1973 | 33.5 | 31.2 | 45.8 | 51.5 | 58.1 | 72.6 | 75.5 | 75.3 | 67.4 | 56.5 | 45.9 | 36.3 |
| 1972 | 33.5 | 29.4 | 38.9 | 48.4 | 61.3 | 66.4 | 74.8 | 72.6 | 66.9 | 50.2 | 41.4 | 37.6 |
| 1971 | 25.9 | 32.9 | 38.5 | 49.4 | 58.4 | 71.2 | 73.6 | 71.7 | 68.7 | 60.1 | 43.5 | 39.5 |
| 1970 | 22.6 | 31.6 | 36.7 | 50.3 | 63.5 | 69.6 | 74.5 | 74.1 | 69.2 | 57.4 | 45.8 | 33.9 |
| 1969 | 29.1 | 31.6 | 38.5 | 53.7 | 62.6 | 71.7 | 73.9 | 73.7 | 66.5 | 54.3 | 43.0 | 31.1 |
| 1968 | 25.8 | 29.3 | 43.4 | 53.3 | 57.6 | 69.3 | 75.7 | 75.2 | 67.7 | 57.0 | 44.8 | 32.1 |
| 1967 | 35.2 | 27.8 | 38.1 | 50.9 | 54.4 | 71.8 | 73.8 | 71.6 | 63.9 | 53.8 | 40.3 | 35.7 |
| 1966 | 28.2 | 30.7 | 41.9 | 46.9 | 58.7 | 71.4 | 77.0 | 74.2 | 64.0 | 52.7 | 45.5 | 33.6 |
| 1965 | 27.2 | 31.5 | 37.1 | 47.8 | 64.8 | 68.9 | 72.8 | 72.3 | 67.8 | 52.6 | 43.7 | 36.7 |
| 1964 | 31.4 | 29.6 | 41.5 | 48.4 | 63.0 | 70.0 | 74.7 | 69.7 | 66.0 | 51.7 | 46.6 | 34.9 |
| 1963 | 26.2 | 25.1 | 42.3 | 51.9 | 59.4 | 70.2 | 74.8 | 70.3 | 61.6 | 57.9 | 47.3 | 27.2 |
| 1962 | 29.5 | 29.2 | 39.5 | 51.4 | 63.4 | 70.8 | 72.0 | 71.5 | 61.7 | 55.1 | 41.1 | 29.1 |
| 1961 | 24.1 | 33.3 | 41.4 | 47.6 | 58.2 | 69.8 | 74.8 | 73.1 | 71.5 | 56.3 | 46.1 | 32.0 |
| 1960 | 33.6 | 34.9 | 31.6 | 55.8 | 60.0 | 70.1 | 72.6 | 74.1 | 66.3 | 54.1 | 45.4 | 26.6 |
| 1959 | 29.8 | 31.9 | 40.1 | 53.8 | 65.0 | 71.3 | 75.3 | 75.4 | 69.3 | 58.5 | 43.2 | 36.0 |
| 1958 | 30.3 | 26.9 | 38.6 | 52.9 | 59.9 | 66.9 | 76.0 | 72.5 | 65.3 | 54.0 | 45.3 | 27.4 |
| 1957 | 28.3 | 36.5 | 41.3 | 53.6 | 62.4 | 73.8 | 75.8 | 72.2 | 68.0 | 52.7 | 45.6 | 37.3 |
| 1956 | 31.4 | 36.3 | 37.9 | 49.0 | 59.9 | 71.2 | 72.4 | 72.9 | 63.6 | 55.9 | 44.8 | 40.5 |
| 1955 | 30.1 | 33.1 | 42.2 | 54.4 | 64.4 | 68.2 | 80.0 | 76.8 | 65.9 | 57.4 | 42.3 | 29.0 |
| 1954 | 30.0 | 39.3 | 41.0 | 54.5 | 59.0 | 71.1 | 75.2 | 71.7 | 67.0 | 58.8 | 42.6 | 34.3 |
| 1953 | 36.3 | 37.6 | 42.9 | 51.1 | 64.2 | 71.2 | 75.6 | 73.2 | 67.3 | 57.2 | 44.4 | 37.9 |
| 1952 | 35.5 | 36.4 | 39.4 | 53.5 | 59.9 | 72.7 | 77.6 | 73.2 | 66.4 | 51.7 | 44.8 | 36.4 |
| 1951 | 34.6 | 34.7 | 41.4 | 51.7 | 62.1 | 69.7 | 74.8 | 73.0 | 66.4 | 57.7 | 40.2 | 35.7 |
| 1950 | 41.4 | 32.6 | 37.2 | 48.2 | 60.2 | 69.7 | 73.6 | 72.4 | 63.2 | 57.6 | 45.8 | 31.8 |
| 1949 | 38.2 | 38.2 | 42.9 | 51.8 | 62.7 | 73.1 | 78.4 | 74.4 | 63.9 | 60.0 | 43.9 | 37.2 |
| 1948 | 24.4 | 30.2 | 43.1 | 51.6 | 61.2 | 69.8 | 75.2 | 73.3 | 66.4 | 53.7 | 49.5 | 35.7 |
| 1947 | 36.4 | 27.8 | 36.5 | 51.8 | 60.9 | 68.3 | 73.6 | 75.2 | 67.0 | 61.0 | 41.7 | 32.4 |
| 1946 | 32.5 | 32.6 | 48.8 | 50.9 | 61.8 | 68.6 | 74.2 | 69.1 | 67.2 | 58.6 | 47.7 | 36.2 |
| 1945 | 24.4 | 32.0 | 50.9 | 54.8 | 59.3 | 70.6 | 74.1 | 71.8 | 69.1 | 54.0 | 45.5 | 28.9 |
| 1944 | 32.6 | 32.2 | 37.5 | 48.4 | 67.2 | 71.2 | 76.8 | 74.7 | 67.1 | 53.5 | 44.0 | 30.0 |
| 1943 | 31.9 | 33.2 | 40.6 | 46.4 | 63.0 | 75.8 | 75.5 | 74.8 | 65.1 | 53.2 | 41.8 | 31.6 |
| 1942 | 28.9 | 29.5 | 42.4 | 54.2 | 65.3 | 70.9 | 75.1 | 71.7 | 66.3 | 55.9 | 44.5 | 30.1 |
| 1941 | 29.4 | 29.0 | 34.6 | 56.4 | 64.0 | 70.4 | 75.2 | 72.4 | 68.4 | 59.8 | 46.4 | 37.4 |
| 1940 | 21.7 | 31.6 | 34.9 | 46.0 | 60.9 | 69.7 | 75.3 | 70.1 | 63.5 | 51.0 | 43.5 | 37.4 |
| 1939 | 31.1 | 36.2 | 40.0 | 48.2 | 64.4 | 71.8 | 74.3 | 75.9 | 66.8 | 54.9 | 41.4 | 35.4 |
| 1938 | 31.1 | 34.9 | 43.4 | 53.0 | 60.1 | 69.6 | 75.5 | 76.1 | 64.0 | 55.8 | 45.0 | 34.3 |
| 1937 | 38.6 | 33.3 | 36.5 | 49.3 | 62.8 | 71.5 | 75.1 | 75.3 | 63.5 | 52.9 | 43.0 | 32.6 |
| 1936 | 26.1 | 23.5 | 45.6 | 48.2 | 64.5 | 70.2 | 75.8 | 74.8 | 67.7 | 55.9 | 40.6 | 36.8 |
| 1935 | 28.0 | 29.8 | 43.8 | 49.0 | 58.3 | 69.8 | 76.9 | 73.4 | 63.6 | 55.0 | 47.3 | 28.6 |

| | | | | | | | | | | | | |
|---|---|---|---|---|---|---|---|---|---|---|---|---|
| 1934 | 33.8 | 19.5 | 36.5 | 50.1 | 63.7 | 74.1 | 77.4 | 70.7 | 67.6 | 52.8 | 46.6 | 32.6 |
| 1933 | 38.4 | 32.7 | 38.4 | 51.3 | 63.9 | 72.3 | 74.1 | 73.2 | 68.1 | 53.6 | 40.2 | 31.9 |
| 1932 | 42.2 | 36.0 | 35.9 | 48.6 | 61.0 | 70.1 | 74.8 | 74.3 | 67.2 | 55.6 | 41.2 | 34.9 |
| 1931 | 31.6 | 33.6 | 38.9 | 50.1 | 61.6 | 70.2 | 76.9 | 73.5 | 71.2 | 58.1 | 49.7 | 39.5 |
| 1930 | 30.7 | 36.0 | 40.3 | 48.2 | 63.6 | 71.9 | 75.2 | 72.4 | 69.6 | 52.2 | 43.1 | 32.5 |
| 1929 | 29.8 | 31.0 | 45.5 | 52.3 | 60.8 | 70.5 | 73.7 | 70.3 | 66.6 | 52.1 | 44.0 | 34.0 |
| 1928 | 32.2 | 32.3 | 38.8 | 48.0 | 59.5 | 67.9 | 74.8 | 75.3 | 61.6 | 56.1 | 44.9 | 36.3 |
| 1927 | 29.0 | 36.3 | 42.9 | 48.0 | 59.5 | 66.1 | 73.6 | 67.5 | 65.1 | 56.8 | 47.5 | 35.1 |
| 1926 | 29.9 | 30.0 | 35.6 | 47.6 | 60.6 | 66.0 | 73.8 | 73.7 | 64.2 | 53.4 | 41.8 | 28.8 |
| 1925 | 26.6 | 37.4 | 43.2 | 52.3 | 58.1 | 74.8 | 72.6 | 71.3 | 68.0 | 49.0 | 41.2 | 33.7 |
| 1924 | 31.1 | 29.0 | 38.8 | 47.9 | 57.7 | 67.7 | 72.2 | 72.4 | 61.3 | 54.1 | 42.1 | 32.7 |
| 1923 | 30.4 | 26.7 | 39.2 | 50.6 | 60.6 | 73.5 | 73.3 | 71.4 | 66.2 | 53.5 | 42.3 | 41.2 |
| 1922 | 27.1 | 34.1 | 41.4 | 51.5 | 64.1 | 72.0 | 73.9 | 71.6 | 66.5 | 56.6 | 43.9 | 32.9 |
| 1921 | 32.5 | 34.5 | 49.9 | 57.1 | 60.9 | 71.7 | 77.5 | 70.3 | 69.9 | 54.0 | 44.0 | 32.8 |
| 1920 | 23.6 | 27.8 | 40.1 | 48.5 | 58.0 | 69.3 | 72.1 | 72.7 | 65.6 | 58.8 | 42.4 | 36.0 |
| 1919 | 33.8 | 33.6 | 43.6 | 50.0 | 61.9 | 71.4 | 74.6 | 70.5 | 65.2 | 59.7 | 43.2 | 28.2 |
| 1918 | 19.1 | 29.6 | 42.7 | 50.0 | 66.3 | 67.3 | 72.5 | 75.1 | 61.1 | 57.4 | 43.3 | 37.9 |
| 1917 | 31.0 | 28.3 | 38.6 | 50.2 | 55.5 | 69.7 | 74.5 | 73.9 | 59.9 | 50.2 | 39.2 | 24.7 |
| 1916 | 35.2 | 28.1 | 31.9 | 49.1 | 62.8 | 65.8 | 75.7 | 73.7 | 63.9 | 54.6 | 42.7 | 32.2 |
| 1915 | 31.6 | 34.6 | 35.8 | 55.2 | 58.8 | 67.8 | 73.0 | 71.4 | 67.7 | 56.2 | 42.9 | 31.6 |
| 1914 | 31.8 | 24.6 | 35.8 | 48.9 | 64.1 | 70.0 | 72.7 | 74.1 | 62.8 | 58.1 | 42.4 | 30.4 |
| 1913 | 38.4 | 30.4 | 44.9 | 52.6 | 61.1 | 70.1 | 74.8 | 72.1 | 63.8 | 57.3 | 45.4 | 37.4 |
| 1912 | 21.0 | 26.8 | 36.5 | 51.7 | 62.9 | 68.5 | 74.2 | 70.3 | 65.9 | 56.6 | 44.8 | 36.6 |
| 1911 | 33.2 | 31.3 | 37.3 | 47.6 | 66.1 | 70.0 | 76.5 | 73.2 | 66.1 | 54.3 | 40.4 | 38.2 |
| 1910 | 28.9 | 29.5 | 45.6 | 54.6 | 60.2 | 67.7 | 75.7 | 71.4 | 67.0 | 57.5 | 39.3 | 26.4 |
| 1909 | 32.1 | 38.1 | 38.0 | 50.7 | 61.4 | 70.9 | 72.3 | 70.9 | 64.0 | 50.7 | 46.3 | 29.5 |
| 1908 | 31.2 | 26.4 | 42.0 | 52.0 | 62.7 | 70.9 | 76.0 | 71.0 | 64.9 | 56.9 | 42.5 | 34.0 |
| 1907 | 31.3 | 23.6 | 41.9 | 46.0 | 56.5 | 65.3 | 74.0 | 70.7 | 66.4 | 50.3 | 42.3 | 35.6 |
| 1906 | 36.2 | 30.4 | 34.0 | 51.8 | 62.1 | 71.6 | 73.4 | 75.0 | 68.1 | 54.6 | 43.4 | 33.1 |
| 1905 | 26.9 | 22.9 | 40.6 | 50.7 | 62.9 | 69.6 | 75.0 | 71.8 | 64.8 | 55.4 | 41.3 | 35.9 |
| 1904 | 21.8 | 23.7 | 37.3 | 47.3 | 63.7 | 69.8 | 73.0 | 70.8 | 64.4 | 52.3 | 39.8 | 27.3 |
| 1903 | 29.2 | 32.9 | 47.5 | 51.2 | 63.4 | 65.1 | 74.2 | 69.0 | 64.0 | 55.6 | 39.1 | 28.6 |
| 1902 | 27.6 | 26.2 | 43.7 | 50.4 | 61.5 | 68.5 | 74.0 | 70.4 | 63.7 | 56.0 | 48.6 | 31.2 |
| 1901 | 30.4 | 24.5 | 39.5 | 48.6 | 60.0 | 71.0 | 78.1 | 74.3 | 65.4 | 54.1 | 37.5 | 31.8 |
| 1900 | 32.0 | 29.9 | 34.6 | 51.0 | 62.2 | 71.7 | 76.4 | 77.5 | 69.5 | 60.0 | 46.7 | 34.3 |
| 1899 | 28.6 | 24.7 | 38.3 | 50.6 | 62.3 | 72.9 | 75.1 | 72.8 | 63.2 | 56.2 | 42.9 | 34.7 |

## *Division Mean Precipitation and Departures from Normal*

The precipitation data is reported in inches
*Values since January 2011 are provisional

| Year | January | February | March | April | May | June | July | August | September | October | November | December |
|---|---|---|---|---|---|---|---|---|---|---|---|---|
| Mean | 3.69 | 2.77 | 3.76 | 3.67 | 4.46 | 3.96 | 4.51 | 3.82 | 4.33 | 3.35 | 3.72 | 3.43 |
| | | | | | | | | | | | | |
| 2016 | -1.21 | 1.30 | -2.31 | -1.63 | -0.54 | -1.95 | | | | | | |
| 2015 | -0.86 | -1.30 | 1.18 | -1.36 | -3.22 | 2.27 | -0.61 | 3.57 | -0.13 | -0.01 | -2.51 | 0.83 |
| 2014 | -0.61 | 1.33 | -0.80 | 0.70 | 1.79 | -0.14 | -0.06 | -1.61 | -2.37 | 0.15 | -0.47 | -0.19 |
| 2013 | -0.14 | -1.01 | -1.59 | -1.06 | -1.55 | 2.91 | 0.43 | 0.53 | -2.64 | 0.32 | -1.37 | 0.75 |
| 2012 | -1.23 | -1.73 | -2.31 | -1.37 | -0.02 | -0.71 | -1.15 | 0.12 | 0.76 | 2.48 | -2.71 | 0.23 |
| 2011 | -1.10 | -0.04 | 1.46 | 1.76 | -0.32 | -1.18 | -1.82 | 8.03 | 9.52 | 0.94 | 0.61 | 0.27 |
| 2010 | -1.21 | 1.35 | 1.53 | -1.14 | -0.65 | -1.32 | 1.48 | -1.64 | -0.27 | 3.88 | -1.28 | -0.49 |
| 2009 | -1.41 | -2.00 | -2.22 | 0.29 | 1.07 | 1.59 | -0.15 | 4.13 | -0.15 | 2.53 | -1.76 | 2.91 |
| 2008 | -2.33 | 2.83 | 0.57 | -0.54 | 0.23 | -1.13 | -0.05 | -1.90 | 2.02 | -0.46 | -0.95 | 2.79 |
| 2007 | -0.55 | -0.05 | 0.66 | 3.58 | -2.92 | 0.32 | -0.10 | 0.94 | -3.04 | 2.44 | -0.68 | 1.79 |
| 2006 | 1.08 | -0.50 | -2.78 | 0.18 | -1.91 | 7.22 | 0.47 | -0.45 | 1.70 | 1.38 | 1.65 | -1.20 |
| 2005 | 1.06 | -0.62 | 0.43 | 1.61 | -2.90 | -1.00 | 1.64 | -1.46 | -3.38 | 6.83 | -0.41 | -0.11 |
| 2004 | -1.63 | -0.14 | -1.71 | 1.51 | -0.92 | 1.22 | 4.09 | 1.90 | 4.77 | -0.97 | 0.85 | 0.48 |
| 2003 | -1.65 | 2.11 | 0.47 | -0.90 | -0.38 | 4.06 | -0.82 | 2.40 | 4.32 | 2.47 | 0.61 | 1.64 |
| 2002 | -0.84 | -2.23 | 0.40 | -0.33 | 0.17 | 0.32 | -3.27 | -0.88 | -0.22 | 3.56 | 0.62 | 1.85 |
| 2001 | -0.83 | -0.28 | 1.18 | -1.42 | -0.58 | 0.03 | -1.65 | -0.96 | -0.52 | -2.61 | -2.66 | -1.18 |
| 2000 | -0.66 | -0.41 | 2.32 | -0.38 | -0.14 | 0.82 | -1.05 | -0.16 | 1.74 | -2.10 | -1.56 | 0.76 |
| 1999 | 2.54 | 0.27 | 0.14 | -0.42 | -2.27 | -2.22 | -3.41 | 0.69 | 7.92 | -0.34 | -1.08 | -0.46 |
| 1998 | 0.71 | 1.23 | 1.10 | 1.32 | 1.09 | 1.36 | -1.67 | -0.80 | -2.63 | 0.28 | -2.42 | -2.59 |
| 1997 | -0.68 | -0.88 | 0.31 | -1.83 | -1.21 | -1.51 | -0.28 | -0.31 | -1.58 | -1.17 | 0.04 | -0.84 |
| 1996 | 2.73 | -0.81 | 0.41 | 1.34 | - | 1.39 | 3.19 | -0.08 | 0.85 | 2.55 | 0.53 | 4.17 |

| | | | | | | | | | | | | |
|---|---|---|---|---|---|---|---|---|---|---|---|---|
| | | | | | 0.74 | | | | | | | |
| 1995 | 0.00 | -0.52 | -1.31 | -1.94 | -0.51 | -1.54 | 0.26 | -2.68 | -0.79 | 3.97 | 0.39 | -1.05 |
| 1994 | 1.88 | 0.64 | 2.39 | -0.72 | -0.60 | -0.67 | 2.31 | 1.80 | -1.25 | -2.03 | 0.25 | -0.99 |
| 1993 | -1.60 | -0.04 | 3.35 | 2.89 | -2.98 | -1.27 | -1.18 | -0.01 | 2.84 | 0.16 | 0.27 | 1.36 |
| 1992 | -1.99 | -1.21 | 0.17 | -1.99 | -0.32 | -0.77 | 0.47 | -1.15 | -0.19 | -1.30 | 1.31 | 0.26 |
| 1991 | -0.68 | -1.60 | 0.22 | -1.12 | -1.67 | -1.82 | -0.03 | 0.25 | -0.35 | -0.87 | -1.41 | 0.37 |
| 1990 | 1.22 | -0.78 | -1.70 | -0.38 | 2.36 | -1.07 | -0.83 | 2.41 | -2.28 | 0.24 | -1.32 | 2.04 |
| 1989 | -1.28 | -0.02 | -0.02 | -1.81 | 4.89 | 2.21 | 3.19 | -1.46 | 0.78 | 0.96 | -1.46 | -2.58 |
| 1988 | -1.16 | 0.58 | -1.61 | -1.03 | 1.95 | -3.04 | 3.09 | -0.38 | -1.64 | -0.86 | 1.65 | -2.42 |
| 1987 | 0.50 | -1.61 | -1.95 | -0.03 | -1.15 | -1.62 | -0.30 | -0.09 | 2.86 | -0.46 | 0.05 | -1.60 |
| 1986 | -0.14 | 0.77 | -1.72 | 0.25 | -2.83 | -2.06 | 0.48 | 1.21 | -2.24 | -1.02 | 2.85 | 1.69 |
| 1985 | -2.41 | -0.28 | -2.00 | -2.84 | 0.90 | -1.11 | 0.19 | 0.42 | 2.06 | -1.56 | 2.40 | -2.00 |
| 1984 | -2.08 | 1.47 | 1.44 | 0.57 | 2.81 | 0.18 | 3.85 | -0.93 | -2.34 | -0.06 | -1.19 | -1.18 |
| 1983 | -0.72 | 0.48 | 2.02 | 4.89 | 0.97 | -0.66 | -3.45 | -1.33 | -2.21 | 1.78 | 2.59 | 4.43 |
| 1982 | 0.48 | 0.21 | -1.48 | 2.05 | -0.86 | 4.04 | -1.56 | -1.10 | -1.42 | -1.73 | 0.14 | -1.53 |
| 1981 | -3.20 | 1.47 | -2.28 | 0.32 | -0.13 | 0.42 | -0.33 | -1.13 | -0.86 | -0.08 | -2.19 | 0.05 |
| 1980 | -2.06 | -1.95 | 2.38 | 1.06 | -0.42 | -0.81 | -1.53 | -1.95 | -2.47 | 0.58 | -0.43 | -2.78 |
| 1979 | 5.89 | 2.55 | -1.55 | 0.18 | 0.86 | -0.60 | 0.01 | 0.26 | 3.30 | 1.86 | -0.53 | -1.62 |
| 1978 | 4.58 | -1.38 | 0.64 | -1.88 | 1.58 | -0.73 | 0.57 | 2.18 | -2.78 | -1.43 | -1.49 | 1.68 |
| 1977 | -1.69 | -1.21 | 1.69 | 1.18 | -3.26 | 0.57 | -1.92 | 1.84 | -0.39 | 0.48 | 2.55 | 2.43 |
| 1976 | 1.45 | -0.78 | -1.62 | -1.45 | -0.37 | -0.15 | 0.50 | 0.10 | -1.08 | 2.86 | -3.19 | -1.51 |
| 1975 | 0.66 | 0.28 | 0.64 | -0.18 | 0.29 | 4.19 | 4.00 | -1.37 | 4.35 | 0.32 | -0.52 | -0.87 |
| 1974 | -0.23 | -1.17 | 0.62 | -0.02 | -0.45 | 0.29 | -2.18 | 0.61 | 1.17 | -1.51 | -2.23 | 0.65 |
| 1973 | 0.27 | 0.15 | -0.77 | 3.33 | 0.60 | 2.15 | -1.88 | -0.41 | -0.26 | -0.51 | -2.70 | 4.09 |
| 1972 | -1.21 | 1.98 | -0.94 | 0.35 | 0.18 | 6.47 | -1.30 | -2.05 | -2.99 | 0.42 | 4.71 | 2.24 |
| 1971 | -1.10 | 2.68 | -1.00 | -1.64 | 1.29 | -2.55 | 0.64 | 5.48 | 1.79 | 0.61 | 1.41 | -2.07 |

| | | | | | | | | | | | | |
|---|---|---|---|---|---|---|---|---|---|---|---|---|
| 1970 | -2.80 | -0.39 | -0.02 | 1.70 | -2.09 | 0.98 | 0.66 | 0.14 | -2.86 | 0.56 | 1.79 | -0.30 |
| 1969 | -2.34 | -1.31 | -1.58 | -1.14 | -1.99 | 0.80 | 4.46 | -0.83 | -0.60 | -2.03 | -1.26 | 2.94 |
| 1968 | -1.37 | -1.88 | 0.35 | -1.52 | 1.98 | 1.53 | -2.38 | -1.76 | -1.56 | -0.11 | 0.19 | -0.72 |
| 1967 | -1.99 | -0.85 | 1.28 | -0.97 | -0.45 | -1.15 | 1.80 | 3.42 | -2.33 | -0.76 | -1.33 | 1.88 |
| 1966 | 0.25 | 1.17 | -2.08 | 0.01 | -1.38 | -3.18 | -1.77 | -1.82 | 2.34 | 0.48 | -0.91 | 0.54 |
| 1965 | -1.19 | 0.12 | -0.80 | -1.79 | -2.68 | -2.04 | -0.29 | 0.10 | -1.23 | -0.75 | -2.12 | -1.96 |
| 1964 | 0.58 | 0.30 | -1.74 | 2.26 | -3.46 | -2.06 | -0.16 | -2.71 | -1.45 | -1.51 | -1.52 | 1.28 |
| 1963 | -1.55 | -0.69 | 0.17 | -2.85 | -2.57 | -1.14 | -2.03 | -0.60 | 0.78 | -3.26 | 3.06 | -1.55 |
| 1962 | -1.22 | 1.16 | -0.42 | 0.33 | -2.53 | -0.06 | -3.29 | 1.07 | -0.77 | -1.04 | 1.19 | -0.87 |
| 1961 | -0.81 | 0.30 | 0.78 | 1.80 | -1.48 | -0.79 | 2.37 | -0.21 | -2.55 | -1.65 | -0.95 | -0.26 |
| 1960 | -0.54 | 0.96 | -1.88 | -0.22 | 1.13 | -1.40 | 1.55 | -0.37 | 4.26 | -1.24 | -1.56 | -0.83 |
| 1959 | -1.42 | -0.90 | -0.52 | -0.77 | -3.05 | 0.43 | 0.39 | 1.44 | -1.60 | 1.06 | -0.41 | 0.54 |
| 1958 | 0.52 | 1.34 | 1.50 | 1.24 | -0.89 | -0.51 | 1.99 | 0.68 | -0.91 | 0.26 | -0.43 | -2.20 |
| 1957 | -2.00 | -0.06 | -1.04 | 1.25 | -3.04 | -1.11 | -3.15 | -2.36 | -1.00 | -1.13 | -0.29 | 2.27 |
| 1956 | -1.30 | 1.54 | 1.28 | -0.79 | -1.69 | 0.12 | 0.51 | -0.66 | -0.73 | 0.10 | 0.56 | 0.26 |
| 1955 | -3.16 | -0.09 | 1.16 | -1.23 | -2.86 | 0.65 | -3.40 | 8.72 | -2.32 | 1.92 | -2.24 | -3.18 |
| 1954 | -1.90 | -1.33 | 0.21 | -0.29 | -1.19 | -2.32 | -2.97 | 2.61 | -1.87 | -0.34 | 0.17 | -0.52 |
| 1953 | 1.64 | -0.28 | 2.22 | 1.07 | 2.71 | -0.36 | -0.79 | -1.92 | -1.20 | 0.28 | -1.33 | 1.23 |
| 1952 | 1.16 | -0.90 | 1.20 | 3.73 | 1.10 | -1.62 | 0.71 | 0.83 | 0.71 | -2.34 | 1.78 | 0.72 |
| 1951 | -0.21 | 0.98 | 0.23 | -0.99 | -1.47 | 1.04 | -1.65 | -1.88 | -1.84 | -0.24 | 2.69 | 1.64 |
| 1950 | -1.59 | 1.07 | 1.21 | -1.88 | 0.14 | -1.51 | 0.03 | 0.77 | -0.64 | -0.78 | 1.72 | 0.05 |
| 1949 | 2.19 | 0.47 | -1.74 | -0.12 | -0.09 | -3.36 | 1.59 | -0.74 | -1.05 | -0.49 | -2.50 | -0.01 |
| 1948 | 0.58 | -0.40 | -0.22 | 0.13 | 3.35 | 0.83 | -1.06 | 0.95 | -2.22 | -1.17 | 0.92 | 1.64 |
| 1947 | -0.13 | -0.84 | -1.56 | -0.28 | 2.75 | 0.15 | 0.03 | -0.26 | -1.65 | -1.60 | 2.37 | -1.78 |
| 1946 | -2.38 | -0.61 | -0.44 | -2.55 | 2.50 | 3.21 | 0.52 | 0.63 | -1.49 | -0.96 | -2.58 | -1.04 |

| | | | | | | | | | | | | |
|---|---|---|---|---|---|---|---|---|---|---|---|---|
| 1945 | -0.24 | -0.06 | -1.71 | 0.11 | 0.45 | 0.78 | 4.05 | 0.38 | 1.11 | -1.43 | 1.67 | 0.81 |
| 1944 | -0.72 | -0.88 | 1.91 | 1.44 | -1.89 | 0.29 | -3.37 | -1.10 | 1.47 | -1.01 | 0.67 | 0.00 |
| 1943 | -0.99 | -1.02 | -0.84 | -0.68 | 1.50 | -0.28 | -0.94 | -2.30 | -3.60 | 3.89 | -0.07 | -2.20 |
| 1942 | -1.31 | -0.35 | 1.11 | -2.22 | 0.00 | -0.24 | 1.46 | 4.20 | -0.86 | 0.84 | -0.39 | 1.37 |
| 1941 | -0.67 | -0.88 | -1.12 | -1.40 | -2.90 | 0.38 | 1.90 | -0.43 | -3.67 | -1.79 | -1.04 | 0.40 |
| 1940 | -2.25 | 0.10 | 1.55 | 2.47 | 0.06 | -1.40 | -1.43 | 1.90 | -0.11 | -0.86 | 0.89 | -0.49 |
| 1939 | -0.04 | 2.70 | -0.21 | 1.23 | -3.08 | 0.35 | -2.11 | 2.46 | -2.20 | 1.23 | -2.86 | -1.42 |
| 1938 | -1.06 | -0.53 | -1.48 | -1.51 | -1.08 | 3.92 | 3.12 | 0.00 | 2.31 | -0.83 | -0.54 | -0.43 |
| 1937 | 2.02 | -0.39 | -1.57 | 0.75 | -1.32 | 0.23 | -1.06 | 2.49 | -3.17 | 2.66 | -0.29 | -2.09 |
| 1936 | 2.77 | 0.31 | 2.02 | -0.72 | -2.45 | 0.99 | -1.83 | 0.85 | -1.93 | -0.63 | -2.71 | 2.23 |
| 1935 | -0.14 | -0.27 | -1.32 | -0.54 | -2.61 | 0.52 | 0.92 | -0.84 | 1.25 | -0.05 | 1.48 | -1.41 |
| 1934 | -0.59 | -0.70 | -0.19 | -0.36 | -0.19 | -0.07 | -0.32 | 0.42 | 3.95 | -1.76 | -0.09 | -0.63 |
| 1933 | -1.67 | 0.15 | 1.55 | 1.43 | 1.17 | -0.99 | 1.30 | 7.71 | 0.07 | -1.41 | -2.89 | -1.14 |
| 1932 | 0.70 | -1.15 | 2.36 | -1.69 | -0.74 | -0.62 | -1.85 | -0.22 | -2.81 | 3.09 | 2.93 | -0.80 |
| 1931 | -1.72 | -1.01 | 0.06 | -1.29 | -0.36 | 0.12 | 2.43 | 1.28 | -2.50 | -1.06 | -2.90 | -1.43 |
| 1930 | -1.51 | -0.25 | -1.39 | -1.18 | -2.44 | 0.33 | -1.77 | -1.84 | -2.75 | -2.09 | -1.66 | -1.00 |
| 1929 | -0.63 | 0.74 | -1.02 | 2.75 | -1.21 | -0.98 | -3.04 | -1.89 | -0.26 | 1.34 | -1.35 | -0.84 |
| 1928 | -1.71 | 0.78 | -0.93 | 1.55 | -2.61 | 3.18 | 1.38 | 2.29 | -0.43 | -2.51 | -2.23 | -2.41 |
| 1927 | -2.03 | 0.29 | -2.41 | -0.22 | -1.39 | -0.76 | 0.52 | 3.02 | -2.44 | 3.95 | -1.02 | 0.46 |
| 1926 | -1.20 | 1.42 | -1.93 | -1.79 | -2.97 | -1.27 | -0.18 | 1.86 | 0.35 | -0.10 | 0.51 | -0.59 |
| 1925 | 0.44 | -1.08 | -1.08 | -1.57 | -2.31 | -1.21 | 1.92 | -2.24 | -2.49 | 0.56 | -0.85 | -1.20 |
| 1924 | 0.53 | 0.81 | -0.85 | 2.00 | 1.37 | 0.71 | -2.09 | 0.12 | 1.58 | -3.00 | -2.24 | -1.48 |
| 1923 | 1.01 | -0.48 | -0.39 | -0.13 | -2.57 | -2.25 | -0.68 | -2.07 | -0.88 | -0.15 | -1.51 | 0.21 |
| 1922 | -1.05 | -0.23 | 0.54 | -1.46 | -1.29 | 1.95 | 0.54 | -0.61 | -2.60 | -1.66 | -3.13 | -0.23 |
| 1921 | -1.53 | 0.44 | -1.47 | -0.33 | 0.09 | -0.98 | -0.72 | -0.40 | -0.73 | -2.44 | 0.35 | -1.40 |
| 1920 | -1.79 | 0.71 | -0.65 | 1.24 | - | 1.91 | 0.45 | 1.32 | -0.70 | -1.96 | -0.36 | 0.93 |

| | | | | | | | | | | | | |
|---|---|---|---|---|---|---|---|---|---|---|---|---|
| | | | | | 2.77 | | | | | | | |
| 1919 | -0.77 | 0.05 | 0.42 | -0.75 | 0.62 | -0.83 | 2.88 | 1.89 | -1.92 | -0.52 | 0.09 | -0.99 |
| 1918 | 0.11 | -1.03 | -1.45 | 1.21 | -0.24 | -0.71 | -1.08 | -1.76 | -0.96 | -2.07 | -2.21 | 0.11 |
| 1917 | -0.84 | -1.22 | 0.71 | -1.39 | -1.68 | 0.63 | 0.36 | -0.32 | -1.78 | 2.82 | -3.32 | -1.02 |
| 1916 | -2.84 | 0.68 | -0.16 | -0.27 | -1.38 | 0.76 | 0.70 | -2.77 | -1.07 | -1.83 | -1.89 | 0.21 |
| 1915 | 2.88 | 2.09 | -2.94 | -1.70 | -0.95 | -0.68 | 0.09 | 3.54 | -2.60 | -0.87 | -2.31 | 0.72 |
| 1914 | 0.31 | -0.12 | -0.94 | 0.17 | -2.11 | -1.06 | 0.26 | -1.08 | -3.75 | -1.77 | -1.72 | 1.07 |
| 1913 | -0.69 | -0.86 | 0.69 | 1.54 | -1.07 | -2.30 | -1.84 | -0.65 | -0.98 | 2.80 | -1.63 | -0.86 |
| 1912 | -1.62 | -0.59 | 2.96 | -0.39 | -0.95 | -1.85 | -0.19 | -0.38 | 1.42 | -0.68 | -1.36 | 0.43 |
| 1911 | -0.82 | -0.49 | -1.01 | -0.06 | -3.54 | 1.19 | -1.49 | 4.49 | -0.72 | 0.88 | 0.11 | -0.23 |
| 1910 | 1.23 | 0.05 | -3.12 | 2.34 | -1.91 | 0.97 | -3.21 | -0.73 | -1.46 | -1.04 | -1.06 | -1.24 |
| 1909 | -0.88 | 1.74 | -0.51 | 1.31 | -1.88 | -0.71 | -3.03 | -0.69 | -1.37 | -2.02 | -2.46 | 0.23 |
| 1908 | -0.33 | 1.74 | -0.57 | -1.38 | 1.81 | -1.94 | 0.03 | 0.29 | -2.14 | -0.93 | -3.11 | -0.64 |
| 1907 | -0.65 | -0.45 | -0.73 | -0.08 | -0.59 | 0.48 | -1.77 | -1.04 | 2.97 | -0.17 | 1.15 | 0.80 |
| 1906 | -1.34 | -0.68 | 0.95 | 0.04 | -1.59 | 0.97 | 0.24 | 1.60 | -2.64 | 1.18 | -2.78 | 0.10 |
| 1905 | 0.25 | -0.70 | -0.04 | -0.96 | -2.64 | -0.58 | 0.46 | 1.36 | -0.84 | -0.71 | -2.19 | -0.21 |
| 1904 | -0.56 | -0.79 | -0.67 | -0.49 | -1.95 | -0.66 | 0.17 | 1.79 | -0.30 | -0.04 | -2.03 | -1.02 |
| 1903 | 0.20 | 1.78 | 1.16 | 0.36 | -3.26 | 3.55 | 1.14 | 2.71 | -1.76 | 3.12 | -2.62 | -0.57 |
| 1902 | -0.68 | 2.69 | 0.39 | -0.56 | -2.97 | 2.38 | 0.34 | -0.67 | 1.08 | 2.70 | -1.77 | 2.77 |
| 1901 | -1.47 | -2.16 | 0.48 | 2.52 | 0.29 | -2.48 | 0.70 | 4.66 | -1.04 | -1.79 | -1.33 | 3.27 |
| 1900 | -0.68 | 2.20 | -0.33 | -1.71 | -1.77 | -0.99 | -0.14 | -0.90 | -1.70 | -0.51 | -0.95 | -1.31 |
| 1899 | -0.42 | 2.73 | 1.81 | -2.12 | -1.76 | -1.51 | -0.07 | 0.11 | 1.31 | -1.24 | -1.59 | -1.48 |

## *Division Mean Snowfall and Departures from Normal*

*The snowfall data is reported in inches*

| Year | January | February | March | April | May | June | July | August | September | October | November | December |
|---|---|---|---|---|---|---|---|---|---|---|---|---|
| Mean | 8.7 | 7.5 | 3.8 | 0.7 | 0.0 | 0.0 | 0.0 | 0.0 | 0.0 | 0.0 | 0.6 | 2.7 |
| | | | | | | | | | | | | |
| 2013 | -6.5 | -3.9 | -0.7 | -0.7 | 0.0 | 0.0 | 0.0 | 0.0 | 0.0 | | | |
| 2012 | -5.8 | -5.6 | -3.8 | -0.7 | 0.0 | 0.0 | 0.0 | 0.0 | 0.0 | 0.0 | 0.4 | 1.6 |
| 2011 | 11.7 | -3.6 | -3.4 | -0.5 | 0.0 | 0.0 | 0.0 | 0.0 | 0.0 | 4.9 | -0.6 | -2.7 |
| 2010 | -7.1 | 27.0 | -3.8 | -0.7 | 0.0 | 0.0 | 0.0 | 0.0 | 0.0 | 0.0 | -0.5 | 0.6 |
| 2009 | -3.6 | -4.3 | 0.2 | -0.7 | 0.0 | 0.0 | 0.0 | 0.0 | 0.0 | 0.0 | -0.6 | 9.7 |
| 2008 | -7.0 | -3.6 | -3.5 | -0.7 | 0.0 | 0.0 | 0.0 | 0.0 | 0.0 | 0.1 | 0.1 | -1.5 |
| 2007 | -7.2 | 0.5 | 3.8 | -0.4 | 0.0 | 0.0 | 0.0 | 0.0 | 0.0 | 0.0 | 0.0 | -0.3 |
| 2006 | -8.6 | 4.3 | -3.8 | -0.5 | 0.0 | 0.0 | 0.0 | 0.0 | 0.0 | 0.0 | -0.6 | -2.7 |
| 2005 | 3.2 | 2.1 | 2.2 | -0.7 | 0.0 | 0.0 | 0.0 | 0.0 | 0.0 | 0.0 | -0.3 | 6.0 |
| 2004 | 2.5 | -6.3 | 2.2 | -0.7 | 0.0 | 0.0 | 0.0 | 0.0 | 0.0 | 0.0 | -0.6 | -2.5 |
| 2003 | -1.6 | 23.1 | -3.2 | 1.7 | 0.0 | 0.0 | 0.0 | 0.0 | 0.0 | 0.0 | -0.6 | 7.4 |
| 2002 | -2.3 | -7.1 | -3.5 | -0.5 | 0.0 | 0.0 | 0.0 | 0.0 | 0.0 | 0.1 | 0.2 | 9.7 |
| 2001 | -2.8 | 3.0 | -1.4 | -0.3 | 0.0 | 0.0 | 0.0 | 0.0 | 0.0 | 0.0 | -0.6 | -2.7 |
| 2000 | 7.7 | -2.7 | -3.8 | 0.7 | 0.0 | 0.0 | 0.0 | 0.0 | 0.0 | 0.0 | -0.6 | 2.6 |
| 1999 | -5.2 | -6.6 | 1.6 | -0.7 | 0.0 | 0.0 | 0.0 | 0.0 | 0.0 | 0.0 | -0.6 | -2.7 |
| 1998 | -6.9 | -7.4 | -3.2 | -0.7 | 0.0 | 0.0 | 0.0 | 0.0 | 0.0 | 0.0 | -0.6 | -2.1 |
| 1997 | -6.9 | -3.0 | 0.6 | 2.0 | 0.0 | 0.0 | 0.0 | 0.0 | 0.0 | 0.0 | -0.6 | -1.3 |
| 1996 | 22.8 | 3.5 | 0.3 | 0.3 | 0.0 | 0.0 | 0.0 | 0.0 | 0.0 | 0.0 | -0.5 | -1.8 |
| 1995 | -8.4 | 0.9 | -2.8 | -0.7 | 0.0 | 0.0 | 0.0 | 0.0 | 0.0 | 0.0 | 2.9 | 10.3 |
| 1994 | 11.8 | 11.9 | 5.8 | -0.7 | 0.0 | 0.0 | 0.0 | 0.0 | 0.0 | 0.0 | -0.5 | -2.7 |
| 1993 | -7.4 | 7.9 | 13.2 | -0.6 | 0.0 | 0.0 | 0.0 | 0.0 | 0.0 | 0.0 | -0.6 | -1.8 |
| 1992 | -6.9 | -5.2 | 1.9 | -0.7 | 0.0 | 0.0 | 0.0 | 0.0 | 0.0 | 0.0 | -0.6 | -1.0 |
| 1991 | -3.5 | -7.0 | -1.4 | -0.7 | 0.0 | 0.0 | 0.0 | 0.0 | 0.0 | 0.0 | -0.6 | -2.5 |
| 1990 | -3.4 | -6.6 | -2.3 | 0.1 | 0.0 | 0.0 | 0.0 | 0.0 | 0.0 | 0.0 | -0.6 | 5.0 |
| 1989 | -1.9 | -6.1 | 0.6 | -0.7 | 0.0 | 0.0 | 0.0 | 0.0 | 0.0 | 0.0 | 3.2 | 3.5 |
| 1988 | 2.3 | -5.8 | -3.8 | -0.7 | 0.0 | 0.0 | 0.0 | 0.0 | 0.0 | 0.0 | -0.6 | -2.4 |
| 1987 | 11.1 | 3.3 | -2.9 | -0.7 | 0.0 | 0.0 | 0.0 | 0.0 | 0.0 | 0.0 | 3.2 | -0.1 |
| 1986 | -4.4 | 7.8 | -3.7 | 0.2 | 0.0 | 0.0 | 0.0 | 0.0 | 0.0 | 0.0 | -0.5 | -0.8 |
| 1985 | 1.3 | 1.2 | -3.7 | 0.0 | 0.0 | 0.0 | 0.0 | 0.0 | 0.0 | 0.0 | -0.5 | 0.3 |
| 1984 | 3.7 | -7.3 | 11.0 | -0.7 | 0.0 | 0.0 | 0.0 | 0.0 | 0.0 | 0.0 | -0.5 | -0.8 |
| 1983 | -4.0 | 17.9 | -1.0 | 3.7 | 0.0 | 0.0 | 0.0 | 0.0 | 0.0 | 0.0 | 0.1 | 0.3 |
| 1982 | 4.1 | -3.1 | -1.2 | 7.7 | 0.0 | 0.0 | 0.0 | 0.0 | 0.0 | 0.0 | -0.6 | 1.0 |
| 1981 | -2.5 | -6.9 | 4.0 | -0.7 | 0.0 | 0.0 | 0.0 | 0.0 | 0.0 | 0.0 | -0.6 | 4.8 |
| 1980 | -5.3 | -6.5 | 2.6 | -0.3 | 0.0 | 0.0 | 0.0 | 0.0 | 0.0 | 0.0 | 0.5 | 0.8 |
| 1979 | 1.0 | 18.3 | -3.8 | -0.7 | 0.0 | 0.0 | 0.0 | 0.0 | 0.0 | 0.5 | -0.6 | 0.2 |
| 1978 | 14.9 | 13.8 | 4.1 | -0.7 | 0.0 | 0.0 | 0.0 | 0.0 | 0.0 | 0.0 | 2.6 | -2.6 |

| | | | | | | | | | | | | |
|---|---|---|---|---|---|---|---|---|---|---|---|---|
| 1977 | 6.1 | -5.6 | -3.6 | -0.7 | 0.0 | 0.0 | 0.0 | 0.0 | 0.0 | 0.0 | -0.4 | -1.8 |
| 1976 | -1.8 | -5.1 | 2.8 | -0.7 | 0.0 | 0.0 | 0.0 | 0.0 | 0.0 | 0.0 | -0.4 | 0.8 |
| 1975 | -2.1 | 1.8 | -1.7 | -0.7 | 0.0 | 0.0 | 0.0 | 0.0 | 0.0 | 0.0 | -0.6 | -1.9 |
| 1974 | -3.5 | 2.4 | -3.8 | -0.7 | 0.0 | 0.0 | 0.0 | 0.0 | 0.0 | 0.0 | -0.6 | -2.5 |
| 1973 | -8.3 | -7.2 | -3.8 | -0.7 | 0.0 | 0.0 | 0.0 | 0.0 | 0.0 | 0.0 | -0.6 | 4.8 |
| 1972 | -5.8 | 7.1 | -3.4 | -0.5 | 0.0 | 0.0 | 0.0 | 0.0 | 0.0 | 0.7 | -0.3 | -2.3 |
| 1971 | 0.7 | -6.6 | 0.4 | 0.4 | 0.0 | 0.0 | 0.0 | 0.0 | 0.0 | 0.0 | 0.6 | -2.6 |
| 1970 | -0.2 | -3.2 | -0.2 | -0.7 | 0.0 | 0.0 | 0.0 | 0.0 | 0.0 | 0.0 | -0.6 | -0.3 |
| 1969 | -6.7 | 2.3 | 5.0 | -0.7 | 0.0 | 0.0 | 0.0 | 0.0 | 0.0 | 0.0 | -0.4 | 10.8 |
| 1968 | -3.2 | -6.6 | -1.4 | -0.7 | 0.0 | 0.0 | 0.0 | 0.0 | 0.0 | 0.0 | 1.7 | -1.2 |
| 1967 | -8.2 | 10.3 | 4.8 | -0.4 | 0.0 | 0.0 | 0.0 | 0.0 | 0.0 | 0.0 | 2.1 | 2.9 |
| 1966 | 13.6 | 4.7 | -3.8 | -0.7 | 0.0 | 0.0 | 0.0 | 0.0 | 0.0 | 0.0 | -0.6 | 23.6 |
| 1965 | 4.2 | -5.6 | 3.3 | 1.0 | 0.0 | 0.0 | 0.0 | 0.0 | 0.0 | 0.0 | -0.6 | -2.7 |
| 1964 | 3.2 | 11.1 | 3.9 | -0.5 | 0.0 | 0.0 | 0.0 | 0.0 | 0.0 | 0.0 | -0.6 | -1.0 |
| 1963 | -2.3 | 0.1 | -2.7 | -0.7 | 0.0 | 0.0 | 0.0 | 0.0 | 0.0 | 0.0 | -0.6 | 8.1 |
| 1962 | -7.9 | 4.8 | 2.8 | -0.7 | 0.0 | 0.0 | 0.0 | 0.0 | 0.0 | 0.2 | 0.4 | 8.3 |
| 1961 | 11.2 | 8.0 | -3.2 | -0.2 | 0.0 | 0.0 | 0.0 | 0.0 | 0.0 | 0.0 | 2.3 | 4.7 |
| 1960 | -8.2 | -1.9 | 9.9 | -0.7 | 0.0 | 0.0 | 0.0 | 0.0 | 0.0 | 0.0 | -0.6 | 11.2 |
| 1959 | -6.2 | -6.7 | -0.4 | 0.7 | 0.0 | 0.0 | 0.0 | 0.0 | 0.0 | 0.0 | -0.6 | 5.4 |
| 1958 | -4.6 | 9.1 | 20.8 | -0.7 | 0.0 | 0.0 | 0.0 | 0.0 | 0.0 | 0.0 | -0.5 | -1.8 |
| 1957 | -4.1 | -1.5 | -2.6 | -0.6 | 0.0 | 0.0 | 0.0 | 0.0 | 0.0 | 0.0 | -0.4 | 6.3 |
| 1956 | -2.8 | -5.9 | 9.5 | 0.3 | 0.0 | 0.0 | 0.0 | 0.0 | 0.0 | 0.0 | -0.6 | -2.6 |
| 1955 | -5.3 | -0.2 | -1.9 | -0.7 | 0.0 | 0.0 | 0.0 | 0.0 | 0.0 | 0.0 | 2.3 | -0.4 |
| 1954 | 3.0 | -5.7 | -3.6 | -0.6 | 0.0 | 0.0 | 0.0 | 0.0 | 0.0 | 0.0 | -0.6 | -1.6 |
| 1953 | -3.2 | -6.4 | 1.5 | -0.7 | 0.0 | 0.0 | 0.0 | 0.0 | 0.0 | 0.0 | 8.2 | -2.7 |
| 1952 | -5.5 | -7.4 | 4.1 | -0.7 | 0.0 | 0.0 | 0.0 | 0.0 | 0.0 | 0.0 | 1.3 | 0.4 |
| 1951 | -6.6 | -5.8 | -3.2 | -0.7 | 0.0 | 0.0 | 0.0 | 0.0 | 0.0 | 0.0 | -0.6 | 7.3 |
| 1950 | -8.4 | -5.6 | -3.4 | -0.7 | 0.0 | 0.0 | 0.0 | 0.0 | 0.0 | 0.0 | 0.4 | -0.5 |

**** Prior to September of 1956 only three climate divisions existed in Pennsylvania; therefore, snowfall values for January 1950 through August 1956 are estimates.****

## *Division Mean Temperature and Departures from Normal*

Temperature data is reported in degrees Farenheit
*Values since January 2011 are provisional

| Year | January | February | March | April | May | June | July | August | September | October | November | December |
|---|---|---|---|---|---|---|---|---|---|---|---|---|
| Mean | 29.6 | 32.3 | 40.9 | 51.0 | 61.2 | 69.9 | 74.6 | 72.9 | 65.5 | 54.0 | 44.2 | 34.5 |
| | | | | | | | | | | | | |
| 2016 | -0.2 | 2.0 | 5.2 | -0.2 | -2.0 | 1.5 | | | | | | |
| 2015 | -2.2 | -10.2 | -5.3 | 0.8 | 6.3 | 0.7 | 0.4 | 0.7 | 4.7 | 0.9 | 5.4 | 11.7 |
| 2014 | -5.2 | -5.1 | -6.2 | -0.4 | 0.5 | 1.4 | -0.5 | -2.2 | 0.8 | 3.2 | -2.7 | 3.1 |
| 2013 | 3.9 | -0.1 | -2.6 | 1.3 | 0.2 | 1.6 | 3.0 | -1.7 | -1.5 | 2.6 | -2.2 | 0.5 |
| 2012 | 4.5 | 6.0 | 9.0 | 1.4 | 4.4 | 0.3 | 3.8 | 1.6 | 1.2 | 1.9 | -3.7 | 5.3 |
| 2011 | -3.2 | 0.8 | 0.1 | 3.4 | 3.0 | 2.3 | 4.1 | 0.1 | 2.4 | 0.6 | 4.0 | 5.6 |
| 2010 | 0.9 | -2.6 | 5.4 | 4.6 | 3.3 | 4.7 | 3.4 | 2.1 | 3.4 | 1.4 | 0.1 | -4.0 |
| 2009 | -4.1 | 1.9 | 0.2 | 2.0 | 0.9 | -0.8 | -2.8 | 2.0 | -0.9 | -1.0 | 4.2 | -1.2 |
| 2008 | 3.5 | 0.7 | 0.4 | 2.8 | -3.1 | 3.4 | 1.2 | -1.5 | 1.7 | -1.1 | -1.2 | 0.3 |
| 2007 | 5.5 | -7.3 | -0.6 | -2.7 | 2.4 | 2.1 | -1.0 | 1.4 | 2.9 | 7.6 | -1.4 | 0.1 |
| 2006 | 8.7 | 1.0 | 1.1 | 3.0 | 0.3 | 0.8 | 2.7 | 2.1 | -1.3 | -0.7 | 4.1 | 6.3 |
| 2005 | 0.0 | 1.2 | -4.2 | 2.1 | -3.8 | 3.3 | 2.2 | 3.7 | 5.1 | 2.4 | 2.4 | -3.5 |
| 2004 | -5.4 | -0.4 | 2.1 | 1.3 | 6.4 | -0.6 | -0.9 | 0.1 | 2.3 | -0.7 | 2.2 | -0.1 |
| 2003 | -3.8 | -4.9 | 0.2 | -1.1 | -3.1 | -2.1 | 0.4 | 2.4 | 0.8 | -1.4 | 4.0 | 0.3 |
| 2002 | 6.5 | 5.6 | 1.8 | 3.5 | -1.0 | 1.6 | 2.5 | 4.3 | 3.4 | 0.1 | -1.1 | -2.7 |
| 2001 | -0.6 | 2.2 | -3.0 | 0.5 | 1.0 | 1.8 | -2.5 | 3.3 | -0.6 | 1.3 | 4.3 | 5.9 |
| 2000 | -0.6 | 1.5 | 5.1 | -0.4 | 1.4 | 0.5 | -3.4 | -1.6 | -1.3 | 1.0 | -1.4 | -6.7 |
| 1999 | 2.0 | 2.5 | -1.6 | 0.3 | 0.3 | 1.1 | 4.2 | 0.9 | 1.4 | -1.3 | 4.2 | 2.2 |
| 1998 | 8.7 | 7.2 | 2.3 | 2.4 | 4.0 | -0.3 | 0.0 | 1.3 | 3.1 | 1.1 | 0.5 | 4.9 |
| 1997 | -0.4 | 5.0 | 0.7 | -1.9 | -3.7 | -1.0 | -0.4 | -1.5 | -0.9 | 0.8 | -2.5 | 0.7 |
| 1996 | -2.4 | -0.9 | -4.4 | 0.1 | -2.2 | 1.4 | -2.3 | -0.5 | 0.7 | 0.2 | -5.1 | 2.9 |
| 1995 | 4.9 | -4.1 | 2.5 | -1.3 | -1.4 | 0.1 | 1.5 | 2.3 | 0.0 | 3.9 | -4.5 | -5.3 |
| 1994 | -7.8 | -5.1 | -3.5 | 3.8 | -2.7 | 3.4 | 2.3 | -2.2 | -1.2 | -1.2 | 4.1 | 3.9 |
| 1993 | 4.4 | -4.7 | -5.1 | -0.8 | 1.5 | 0.1 | 1.6 | 1.1 | -0.7 | -2.0 | -0.9 | -1.5 |
| 1992 | 2.4 | 1.8 | -3.1 | -1.6 | -3.0 | -2.8 | -2.1 | -3.6 | -1.4 | -3.9 | -1.0 | -0.3 |
| 1991 | 1.5 | 4.4 | 2.0 | 1.7 | 6.0 | 1.7 | 0.9 | 1.7 | -1.2 | 0.7 | -0.9 | 1.4 |
| 1990 | 8.2 | 6.1 | 3.2 | 0.8 | -1.9 | 0.4 | 0.2 | -0.6 | -1.5 | 4.0 | 2.0 | 3.6 |
| 1989 | 4.2 | -0.7 | -1.5 | -2.2 | -1.6 | 1.4 | -0.9 | -0.9 | 0.6 | 1.5 | -1.6 | -12.2 |
| 1988 | -5.4 | -0.9 | 0.4 | -2.3 | -0.1 | -0.8 | 2.7 | 2.3 | -2.8 | -5.2 | 0.0 | -1.9 |
| 1987 | -0.6 | -2.1 | 2.3 | 0.1 | 1.0 | 1.9 | 2.0 | -1.3 | -0.5 | -4.9 | 0.0 | 1.6 |
| 1986 | 1.2 | -2.5 | 1.5 | 0.1 | 3.1 | 0.8 | 0.6 | -2.2 | -0.6 | 1.1 | -3.0 | 1.1 |
| 1985 | -3.6 | 0.5 | 1.6 | 2.9 | 1.7 | -2.8 | -1.1 | -0.7 | 1.2 | 2.2 | 4.0 | -4.0 |
| 1984 | -4.5 | 5.2 | -6.7 | -2.1 | -2.2 | 1.3 | -2.1 | 0.5 | -3.3 | 5.4 | -1.7 | 5.2 |
| 1983 | 2.0 | 0.0 | 1.1 | -2.0 | -2.1 | 0.1 | 1.0 | 2.3 | 1.3 | 0.8 | 0.5 | -3.8 |
| 1982 | -7.1 | 0.1 | -1.6 | -2.5 | 2.0 | -3.0 | -0.3 | -3.4 | -0.8 | 0.3 | 2.3 | 5.4 |
| 1981 | -5.3 | 4.3 | -2.2 | 2.5 | 0.1 | 0.7 | 0.2 | -1.6 | -1.1 | -3.1 | -0.6 | -2.4 |

| | | | | | | | | | | | | |
|---|---|---|---|---|---|---|---|---|---|---|---|---|
| 1980 | 1.0 | -3.8 | -2.6 | 1.7 | 2.1 | -2.2 | 1.6 | 3.8 | 3.8 | -1.3 | -3.0 | -3.6 |
| 1979 | -0.3 | -10.5 | 3.2 | -1.1 | 1.1 | -2.5 | -1.4 | -0.2 | -0.2 | -1.2 | 4.1 | 2.0 |
| 1978 | -3.2 | -8.7 | -3.3 | -0.7 | -1.6 | 0.1 | -2.1 | 2.4 | -0.1 | -1.0 | 1.2 | 1.7 |
| 1977 | -10.0 | 0.2 | 5.7 | 3.2 | 3.0 | -1.7 | 1.0 | 0.7 | 2.0 | -1.1 | 2.2 | -2.3 |
| 1976 | -2.7 | 6.9 | 4.0 | 3.8 | -1.1 | 3.1 | -1.9 | -0.8 | -0.8 | -3.4 | -5.3 | -5.7 |
| 1975 | 5.6 | 1.6 | -1.6 | -4.3 | 3.4 | 0.2 | -0.2 | 1.2 | -2.7 | 4.3 | 5.6 | 0.3 |
| 1974 | 4.7 | -1.0 | 0.8 | 2.3 | -0.9 | -2.5 | -0.4 | 0.7 | -0.7 | -2.4 | 1.6 | 2.9 |
| 1973 | 3.9 | -1.1 | 4.9 | 0.5 | -3.1 | 2.7 | 0.9 | 2.4 | 1.9 | 2.5 | 1.7 | 1.8 |
| 1972 | 3.9 | -2.9 | -2.0 | -2.6 | 0.1 | -3.5 | 0.2 | -0.3 | 1.4 | -3.8 | -2.8 | 3.1 |
| 1971 | -3.7 | 0.6 | -2.4 | -1.6 | -2.8 | 1.3 | -1.0 | -1.2 | 3.2 | 6.1 | -0.7 | 5.0 |
| 1970 | -7.0 | -0.7 | -4.2 | -0.7 | 2.3 | -0.3 | -0.1 | 1.2 | 3.7 | 3.4 | 1.6 | -0.6 |
| 1969 | -0.5 | -0.7 | -2.4 | 2.7 | 1.4 | 1.8 | -0.7 | 0.8 | 1.0 | 0.3 | -1.2 | -3.4 |
| 1968 | -3.8 | -3.0 | 2.5 | 2.3 | -3.6 | -0.6 | 1.1 | 2.3 | 2.2 | 3.0 | 0.6 | -2.4 |
| 1967 | 5.6 | -4.5 | -2.8 | -0.1 | -6.8 | 1.9 | -0.8 | -1.3 | -1.6 | -0.2 | -3.9 | 1.2 |
| 1966 | -1.4 | -1.6 | 1.0 | -4.1 | -2.5 | 1.5 | 2.4 | 1.3 | -1.5 | -1.3 | 1.3 | -0.9 |
| 1965 | -2.4 | -0.8 | -3.8 | -3.2 | 3.6 | -1.0 | -1.8 | -0.6 | 2.3 | -1.4 | -0.5 | 2.2 |
| 1964 | 1.8 | -2.7 | 0.6 | -2.6 | 1.8 | 0.1 | 0.1 | -3.2 | 0.5 | -2.3 | 2.4 | 0.4 |
| 1963 | -3.4 | -7.2 | 1.4 | 0.9 | -1.8 | 0.3 | 0.2 | -2.6 | -3.9 | 3.9 | 3.1 | -7.3 |
| 1962 | -0.1 | -3.1 | -1.4 | 0.4 | 2.2 | 0.9 | -2.6 | -1.4 | -3.8 | 1.1 | -3.1 | -5.4 |
| 1961 | -5.5 | 1.0 | 0.5 | -3.4 | -3.0 | -0.1 | 0.2 | 0.2 | 6.0 | 2.3 | 1.9 | -2.5 |
| 1960 | 4.0 | 2.6 | -9.3 | 4.8 | -1.2 | 0.2 | -2.0 | 1.2 | 0.8 | 0.1 | 1.2 | -7.9 |
| 1959 | 0.2 | -0.4 | -0.8 | 2.8 | 3.8 | 1.4 | 0.7 | 2.5 | 3.8 | 4.5 | -1.0 | 1.5 |
| 1958 | 0.7 | -5.4 | -2.3 | 1.9 | -1.3 | -3.0 | 1.4 | -0.4 | -0.2 | 0.0 | 1.1 | -7.1 |
| 1957 | -1.3 | 4.2 | 0.4 | 2.6 | 1.2 | 3.9 | 1.2 | -0.7 | 2.5 | -1.3 | 1.4 | 2.8 |
| 1956 | 1.8 | 4.0 | -3.0 | -2.0 | -1.3 | 1.3 | -2.2 | 0.0 | -1.9 | 1.9 | 0.6 | 6.0 |
| 1955 | 0.5 | 0.8 | 1.3 | 3.4 | 3.2 | -1.7 | 5.4 | 3.9 | 0.4 | 3.4 | -1.9 | -5.5 |
| 1954 | 0.4 | 7.0 | 0.1 | 3.5 | -2.2 | 1.2 | 0.6 | -1.2 | 1.5 | 4.8 | -1.6 | -0.2 |
| 1953 | 6.7 | 5.3 | 2.0 | 0.1 | 3.0 | 1.3 | 1.0 | 0.3 | 1.8 | 3.2 | 0.2 | 3.4 |
| 1952 | 5.9 | 4.1 | -1.5 | 2.5 | -1.3 | 2.8 | 3.0 | 0.3 | 0.9 | -2.3 | 0.6 | 1.9 |
| 1951 | 5.0 | 2.4 | 0.5 | 0.7 | 0.9 | -0.2 | 0.2 | 0.1 | 0.9 | 3.7 | -4.0 | 1.2 |
| 1950 | 11.8 | 0.3 | -3.7 | -2.8 | -1.0 | -0.2 | -1.0 | -0.5 | -2.3 | 3.6 | 1.6 | -2.7 |
| 1949 | 8.6 | 5.9 | 2.0 | 0.8 | 1.5 | 3.2 | 3.8 | 1.5 | -1.6 | 6.0 | -0.3 | 2.7 |
| 1948 | -5.2 | -2.1 | 2.2 | 0.6 | 0.0 | -0.1 | 0.6 | 0.4 | 0.9 | -0.3 | 5.3 | 1.2 |
| 1947 | 6.8 | -4.5 | -4.4 | 0.8 | -0.3 | -1.6 | -1.0 | 2.3 | 1.5 | 7.0 | -2.5 | -2.1 |
| 1946 | 2.9 | 0.3 | 7.9 | -0.1 | 0.6 | -1.3 | -0.4 | -3.8 | 1.7 | 4.6 | 3.5 | 1.7 |
| 1945 | -5.2 | -0.3 | 10.0 | 3.8 | -1.9 | 0.7 | -0.5 | -1.1 | 3.6 | 0.0 | 1.3 | -5.6 |
| 1944 | 3.0 | -0.1 | -3.4 | -2.6 | 6.0 | 1.3 | 2.2 | 1.8 | 1.6 | -0.5 | -0.2 | -4.5 |
| 1943 | 2.3 | 0.9 | -0.3 | -4.6 | 1.8 | 5.9 | 0.9 | 1.9 | -0.4 | -0.8 | -2.4 | -2.9 |
| 1942 | -0.7 | -2.8 | 1.5 | 3.2 | 4.1 | 1.0 | 0.5 | -1.2 | 0.8 | 1.9 | 0.3 | -4.4 |
| 1941 | -0.2 | -3.3 | -6.3 | 5.4 | 2.8 | 0.5 | 0.6 | -0.5 | 2.9 | 5.8 | 2.2 | 2.9 |
| 1940 | -7.9 | -0.7 | -6.0 | -5.0 | -0.3 | -0.2 | 0.7 | -2.8 | -2.0 | -3.0 | -0.7 | 2.9 |
| 1939 | 1.5 | 3.9 | -0.9 | -2.8 | 3.2 | 1.9 | -0.3 | 3.0 | 1.3 | 0.9 | -2.8 | 0.9 |
| 1938 | 1.5 | 2.6 | 2.5 | 2.0 | -1.1 | -0.3 | 0.9 | 3.2 | -1.5 | 1.8 | 0.8 | -0.2 |
| 1937 | 9.0 | 1.0 | -4.4 | -1.7 | 1.6 | 1.6 | 0.5 | 2.4 | -2.0 | -1.1 | -1.2 | -1.9 |

| | | | | | | | | | | | | |
|---|---|---|---|---|---|---|---|---|---|---|---|---|
| 1936 | -3.5 | -8.8 | 4.7 | -2.8 | 3.3 | 0.3 | 1.2 | 1.9 | 2.2 | 1.9 | -3.6 | 2.3 |
| 1935 | -1.6 | -2.5 | 2.9 | -2.0 | -2.9 | -0.1 | 2.3 | 0.5 | -1.9 | 1.0 | 3.1 | -5.9 |
| 1934 | 4.2 | -12.8 | -4.4 | -0.9 | 2.5 | 4.2 | 2.8 | -2.2 | 2.1 | -1.2 | 2.4 | -1.9 |
| 1933 | 8.8 | 0.4 | -2.5 | 0.3 | 2.7 | 2.4 | -0.5 | 0.3 | 2.6 | -0.4 | -4.0 | -2.6 |
| 1932 | 12.6 | 3.7 | -5.0 | -2.4 | -0.2 | 0.2 | 0.2 | 1.4 | 1.7 | 1.6 | -3.0 | 0.4 |
| 1931 | 2.0 | 1.3 | -2.0 | -0.9 | 0.4 | 0.3 | 2.3 | 0.6 | 5.7 | 4.1 | 5.5 | 5.0 |
| 1930 | 1.1 | 3.7 | -0.6 | -2.8 | 2.4 | 2.0 | 0.6 | -0.5 | 4.1 | -1.8 | -1.1 | -2.0 |
| 1929 | 0.2 | -1.3 | 4.6 | 1.3 | -0.4 | 0.6 | -0.9 | -2.6 | 1.1 | -1.9 | -0.2 | -0.5 |
| 1928 | 2.6 | 0.0 | -2.1 | -3.0 | -1.7 | -2.0 | 0.2 | 2.4 | -3.9 | 2.1 | 0.7 | 1.8 |
| 1927 | -0.6 | 4.0 | 2.0 | -3.0 | -1.7 | -3.8 | -1.0 | -5.4 | -0.4 | 2.8 | 3.3 | 0.6 |
| 1926 | 0.3 | -2.3 | -5.3 | -3.4 | -0.6 | -3.9 | -0.8 | 0.8 | -1.3 | -0.6 | -2.4 | -5.7 |
| 1925 | -3.0 | 5.1 | 2.3 | 1.3 | -3.1 | 4.9 | -2.0 | -1.6 | 2.5 | -5.0 | -3.0 | -0.8 |
| 1924 | 1.5 | -3.3 | -2.1 | -3.1 | -3.5 | -2.2 | -2.4 | -0.5 | -4.2 | 0.1 | -2.1 | -1.8 |
| 1923 | 0.8 | -5.6 | -1.7 | -0.4 | -0.6 | 3.6 | -1.3 | -1.5 | 0.7 | -0.5 | -1.9 | 6.7 |
| 1922 | -2.5 | 1.8 | 0.5 | 0.5 | 2.9 | 2.1 | -0.7 | -1.3 | 1.0 | 2.6 | -0.3 | -1.6 |
| 1921 | 2.9 | 2.2 | 9.0 | 6.1 | -0.3 | 1.8 | 2.9 | -2.6 | 4.4 | 0.0 | -0.2 | -1.7 |
| 1920 | -6.0 | -4.5 | -0.8 | -2.5 | -3.2 | -0.6 | -2.5 | -0.2 | 0.1 | 4.8 | -1.8 | 1.5 |
| 1919 | 4.2 | 1.3 | 2.7 | -1.0 | 0.7 | 1.5 | 0.0 | -2.4 | -0.3 | 5.7 | -1.0 | -6.3 |
| 1918 | -10.5 | -2.7 | 1.8 | -1.0 | 5.1 | -2.6 | -2.1 | 2.2 | -4.4 | 3.4 | -0.9 | 3.4 |
| 1917 | 1.4 | -4.0 | -2.3 | -0.8 | -5.7 | -0.2 | -0.1 | 1.0 | -5.6 | -3.8 | -5.0 | -9.8 |
| 1916 | 5.6 | -4.2 | -9.0 | -1.9 | 1.6 | -4.1 | 1.1 | 0.8 | -1.6 | 0.6 | -1.5 | -2.3 |
| 1915 | 2.0 | 2.3 | -5.1 | 4.2 | -2.4 | -2.1 | -1.6 | -1.5 | 2.2 | 2.2 | -1.3 | -2.9 |
| 1914 | 2.2 | -7.7 | -5.1 | -2.1 | 2.9 | 0.1 | -1.9 | 1.2 | -2.7 | 4.1 | -1.8 | -4.1 |
| 1913 | 8.8 | -1.9 | 4.0 | 1.6 | -0.1 | 0.2 | 0.2 | -0.8 | -1.7 | 3.3 | 1.2 | 2.9 |
| 1912 | -8.6 | -5.5 | -4.4 | 0.7 | 1.7 | -1.4 | -0.4 | -2.6 | 0.4 | 2.6 | 0.6 | 2.1 |
| 1911 | 3.6 | -1.0 | -3.6 | -3.4 | 4.9 | 0.1 | 1.9 | 0.3 | 0.6 | 0.3 | -3.8 | 3.7 |
| 1910 | -0.7 | -2.8 | 4.7 | 3.6 | -1.0 | -2.2 | 1.1 | -1.5 | 1.5 | 3.5 | -4.9 | -8.1 |
| 1909 | 2.5 | 5.8 | -2.9 | -0.3 | 0.2 | 1.0 | -2.3 | -2.0 | -1.5 | -3.3 | 2.1 | -5.0 |
| 1908 | 1.6 | -5.9 | 1.1 | 1.0 | 1.5 | 1.0 | 1.4 | -1.9 | -0.6 | 2.9 | -1.7 | -0.5 |
| 1907 | 1.7 | -8.7 | 1.0 | -5.0 | -4.7 | -4.6 | -0.6 | -2.2 | 0.9 | -3.7 | -1.9 | 1.1 |
| 1906 | 6.6 | -1.9 | -6.9 | 0.8 | 0.9 | 1.7 | -1.2 | 2.1 | 2.6 | 0.6 | -0.8 | -1.4 |
| 1905 | -2.7 | -9.4 | -0.3 | -0.3 | 1.7 | -0.3 | 0.4 | -1.1 | -0.7 | 1.4 | -2.9 | 1.4 |
| 1904 | -7.8 | -8.6 | -3.6 | -3.7 | 2.5 | -0.1 | -1.6 | -2.1 | -1.1 | -1.7 | -4.4 | -7.2 |
| 1903 | -0.4 | 0.6 | 6.6 | 0.2 | 2.2 | -4.8 | -0.4 | -3.9 | -1.5 | 1.6 | -5.1 | -5.9 |
| 1902 | -2.0 | -6.1 | 2.8 | -0.6 | 0.3 | -1.4 | -0.6 | -2.5 | -1.8 | 2.0 | 4.4 | -3.3 |
| 1901 | 0.8 | -7.8 | -1.4 | -2.4 | -1.2 | 1.1 | 3.5 | 1.4 | -0.1 | 0.1 | -6.7 | -2.7 |
| 1900 | 2.4 | -2.4 | -6.3 | 0.0 | 1.0 | 1.8 | 1.8 | 4.6 | 4.0 | 6.0 | 2.5 | -0.2 |
| 1899 | -1.0 | -7.6 | -2.6 | -0.4 | 1.1 | 3.0 | 0.5 | -0.1 | -2.3 | 2.2 | -1.3 | 0.2 |

APPENDIX D-18

DRBC WATER QUALITY OBJECTIVES AND STATE WATER QUALITY REQUIREMENTS

# Administrative Manual – Part III
# WATER QUALITY REGULATIONS

## WITH AMENDMENTS THROUGH
## DECEMBER 4, 2013

## 18 CFR PART 410

Delaware River Basin Commission
DELAWARE · NEW JERSEY
PENNSYLVANIA · NEW YORK
UNITED STATES OF AMERICA

**DELAWARE RIVER BASIN COMMISSION**
**P.O. BOX 7360, WEST TRENTON, NEW JERSEY 08628**
**(609) 883-9500 ● www.drbc.net**

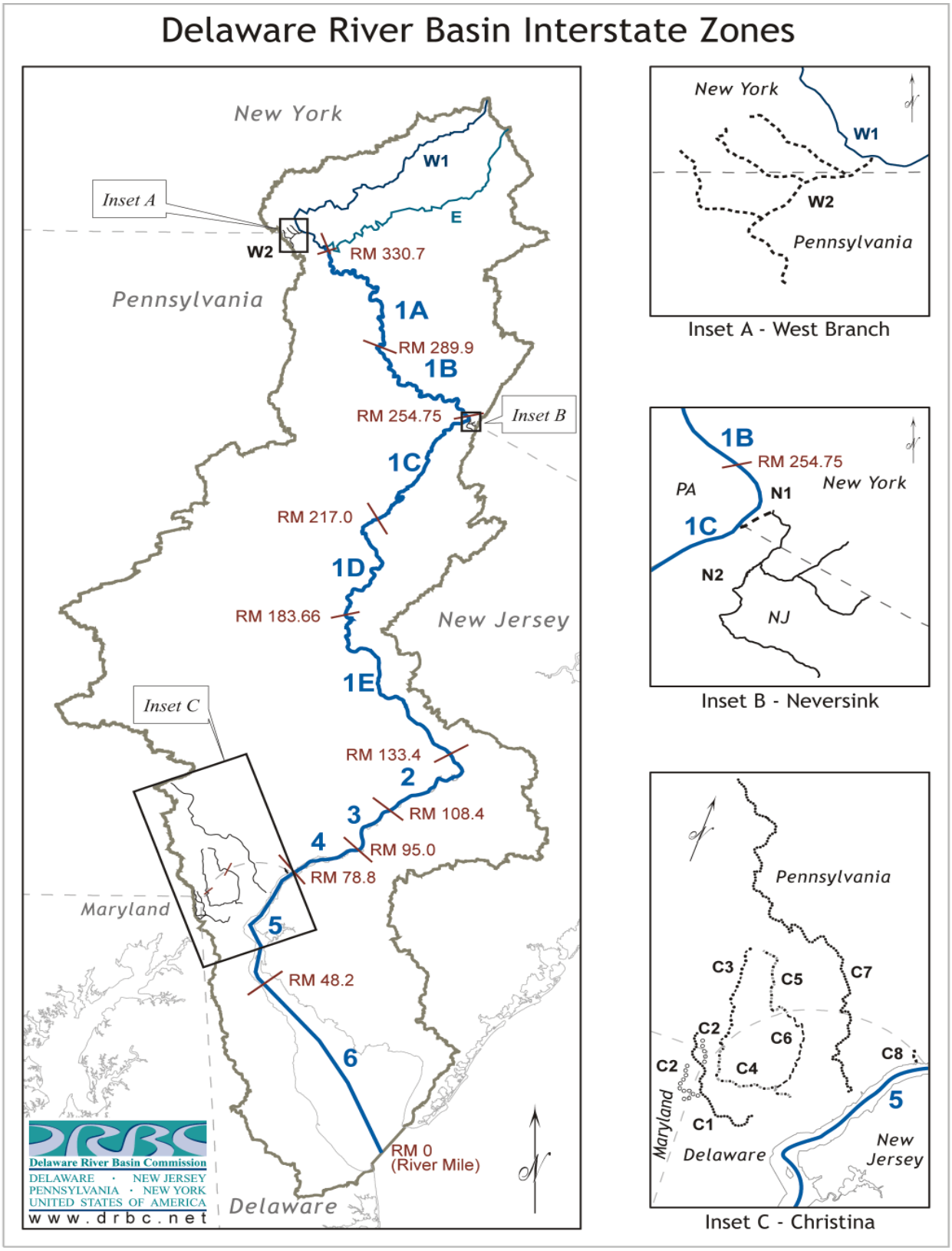
Delaware River Basin Interstate Zones
New York
W1
E
Inset A
W2
RM 330.7
Pennsylvania
1A
RM 289.9
1B
RM 254.75
Inset B
1C
RM 217.0
1D
RM 183.66
New Jersey
1E
Inset C
RM 133.4
2
3
RM 108.4
4
RM 95.0
RM 78.8
Maryland
5
RM 48.2
6
RM 0
(River Mile)
Delaware
Delaware River Basin Commission
DELAWARE · NEW JERSEY
PENNSYLVANIA · NEW YORK
UNITED STATES OF AMERICA
www.drbc.net
New York
W1
W2
Pennsylvania
Inset A - West Branch
1B
RM 254.75
PA
N1
New York
1C
N2
NJ
Inset B - Neversink
Pennsylvania
C3
C5
C7
C2
C6
C8
C2
C4
5
C1
Maryland
Delaware
New Jersey
Inset C - Christina

b. natural temperature will prevail above 87°F (30.6°C).

3. **pH**. Between 6.0 and 8.5.

4. **Phenols**. Not to exceed 0.005 mg/l, unless due to natural conditions.

5. **Threshold Odor Number**. Not to exceed 24 at 60°C.

6. **Synthetic Detergents** (M.B.A.S.). Not to exceed 0.5 mg/l.

7. **Radioactivity**.
   a. alpha emitters - not to exceed 3 pc/l (picocuries per liter);
   b. beta emitters - not to exceed 1,000 pc/l.

8. **Fecal Coliform**. Not to exceed 200 per 100 milliliters as a geometric average; samples shall be taken at such frequency and location as to permit valid interpretation.

9. **Total Dissolved Solids**. Not to exceed
   a. 133 percent of background, or
   b. 500 mg/l, whichever is less.

D. **Effluent Quality Requirements**.

1. All discharges shall meet the effluent quality requirements of Section 3.10.

2. The carbonaceous oxygen demand from an outfall (exclusive of stormwater bypass) shall not exceed that assigned by the Commission to maintain stream quality objectives.

**Section 3.30 Interstate Streams – Tidal.**

3.30.1 **Application**. This Article shall apply to the Delaware River Estuary and Bay, including the tidal portions of the tributaries thereof.

3.30.2 **Zone 2.**

A. **Description**. Zone 2 is that part of the Delaware River extending from the head of tidewater at Trenton, New Jersey, R.M. (River Mile) 133.4 (Trenton-Morrisville Toll Bridge) to R.M. 108.4 below the mouth of Pennypack Creek, including the tidal portions of the tributaries thereof.

B. **Water Uses to be Protected**. The quality of Zone 2 waters shall be maintained in a safe and satisfactory condition for the following uses:

1. a. public water supplies after reasonable treatment,

b. industrial water supplies after reasonable treatment,
c. agricultural water supplies;

2. a. maintenance and propagation of resident fish and other aquatic life,
   b. passage of anadromous fish,
   c. wildlife;

3. a. recreation;

4. a. navigation.

C. **Stream Quality Objectives.**

1. **Dissolved Oxygen**.
   a. 24-hour average concentration shall not be less than 5.0 mg/l.
   b. During the periods from April 1 to June 15, and September 16 to December 31, the dissolved oxygen shall not have a seasonal average less than 6.5 mg/l.

2. **Temperature**. Shall not exceed
   a. 5°F (2.8°C) above the average 24-hour temperature gradient displayed during the 1961-66 period, or
   b. a maximum of 86°F (30.0°C), whichever is less. [See 4.30.6.F.3.]

3. **pH**. Between 6.5 and 8.5 inclusive, unless outside this range due to natural conditions.

4. **Phenols**. Maximum 0.005 mg/l unless exceeded due to natural conditions.

5. **Threshold Odor Number**. Not to exceed 24 at 60°C.

6. **Synthetic Detergents** (M.B.A.S.). Maximum 30-day average 0.5 mg/l.

7. **Radioactivity**.
   a. alpha emitters - maximum 3 pc/l (picocuries per liter);
   b. beta emitters - maximum 1,000 pc/l.

8. **Bacteria**.
   a. **Fecal Coliform**. Maximum geometric average 200 per 100 milliliters.
   b. **Enterococcus**. Maximum geometric average 33 per 100 milliliters.

9. **Total Dissolved Solids**. Not to exceed
   a. 133 percent of background, or
   b. 500 mg/l, whichever is less.

10. **Turbidity**. Unless exceeded due to natural conditions
    a. maximum 30-day average 40 units;

b. maximum 150 units;
c. except above R.M. 117.81 during the period May 30 to September 15 when the turbidity shall not exceed 30 units.

11. **Alkalinity**. Between 20 and 100 mg/l.

12. **Chlorides**. Maximum 15-day average 50 mg/l.

13. **Hardness**. Maximum 30-day average 95 mg/l.

14. **Toxic Pollutants**.

    a. Applicable MCLs and criteria to protect the taste and odor of ingested water and fish are presented in Tables 3 and 4.

    b. Applicable freshwater stream quality objectives for the protection of aquatic life are presented in Table 5.

    c. Applicable freshwater stream quality objectives for the protection of human health are presented in Tables 6 and 7.

D. **Effluent Quality Requirements**.

1. All discharges shall meet the effluent quality requirements of Section 3.10.

2. The carbonaceous oxygen demand from all outfalls in the zone (exclusive of stormwater bypass) shall not exceed that assigned by Commission regulations.

TABLE 3: MAXIMUM CONTAMINANT LEVELS TO BE APPLIED AS HUMAN HEALTH STREAM QUALITY OBJECTIVES IN ZONES 2 AND 3 OF THE DELAWARE RIVER ESTUARY.

| **Parameter** | **Maximum Contaminant Level (µg/l)** |
|---|---|
| **Metals** | |
| Arsenic | 10 |
| Barium | 2000 |
| Beryllium | 4 |
| Chromium (trivalent) | 100 |
| Copper | 1300 |
| Lead | 15 |
| Selenium | 50 |
| **Pesticides/PCBs** | |
| alpha-BHC | 0.2 |
| beta-BHC | 0.2 |
| gamma - BHC (Lindane) | 2 |
| 2,4-Dichloro-phenoxyacetic acid (2,4-D) | 70 |
| Methoxychlor | 40 |
| Toxaphene | 3 |
| Dioxin (2,3,7,8-TCDD) | 0.00003 |
| 2,4,5 Trichloro-phenoxypropionic acid (2,4,5-TP-Silvex) | 50 |
| **Volatile Organic Compounds (VOCs)** | |
| Benzene | 5 |
| Carbon Tetrachloride | 5 |
| 1,2-Dichloroethane | 5 |
| 1,1-Dichloroethylene | 7 |
| [1,2 - trans – Dichloroethene] 1,2 - trans – Dichloroethylene | 100 |
| Dichloromethane (methylene chloride) | 5 |
| Tetrachloroethylene (PCE) | 5 |
| Toluene | 1000 |
| Total Trihalomethanes | 80 |
| 1,1,1-Trichloroethane | 200 |
| 1,1,2-Trichloroethane | 5 |

| Parameter | Maximum Contaminant Level (µg/l) |
|---|---|
| Trichloroethylene | 5 |
| Vinyl Chloride | 2 |
| **Polycyclic Aromatic Hydrocarbons (PAHs)** | |
| Benzo(a)Pyrene | 0.2 |
| **Other Compounds** | |
| Asbestos | 7 million fibers/L |
| Bis(2-Ethylhexyl) Phthalate | 6 |
| Fluoride | 4,000 |
| Nitrate | 10,000 |
| Pentachlorophenol | 1 |
| Dioxin (2,3,7,8-TCDD) | 0.00003 |

TABLE 4: CRITERIA TO PROTECT THE TASTE AND ODOR OF INGESTED WATER AND FISH TO BE APPLIED AS HUMAN HEALTH STREAM QUALITY OBJECTIVES IN ALL ZONES OF THE DELAWARE RIVER ESTUARY.

| **Parameter** | **Stream Quality Objective (µg/l)** |
|---|---|
| Phenol | 300 |
| 2 – Chlorophenol | 0.1 |
| 2,4 - Dichlorophenol | 0.3 |
| 2,4 - Dimethylphenol | 400 |
| 4 - Chloro - 3 - methylphenol | 3.0 mg/l |
| Pentachlorophenol | 30 |
| Acenaphthene | 20 |
| Chlorobenzene | 20 |
| Hexachlorocyclopentadiene | 1.0 |
| Nitrobenzene | 30 |

TABLE 5: STREAM QUALITY OBJECTIVES FOR TOXIC POLLUTANTS FOR THE PROTECTION OF AQUATIC LIFE IN THE DELAWARE RIVER ESTUARY AND BAY.

| **Parameter** | **Freshwater Objectives (µg/l)** | | **Marine Objectives (µg/l)** | |
|---|---|---|---|---|
| | **Acute** | **Chronic** | **Acute** | **Chronic** |
| Metals | | | | |
| Aluminum[a,b] | 750 | 87 | NA | NA |
| Arsenic (trivalent) [c] | 340 | 150 | 69 | 36 |
| Cadmium [c] | 0.651*EXP(1.0166* LN(hardness)-3.924) | 0.651*EXP(0.7409* LN(hardness)-4.719) | 40 | 8.8 |
| Chromium (trivalent) [c] | 0.277*EXP(0.819* LN(hardness)+3.7256) | 0.277*EXP(0.819* LN(hardness)+0.6848) | NA | NA |
| Chromium (hexavalent) [c] | 16 | 11 | 1,100 | 50 |
| Copper [c] | 0.908*EXP(0.9422* LN(hardness)-1.7) | 0.908*EXP(0.8545* LN(hardness)-1.702) | 4.8 | 3.1 |
| Lead [c] | 38 | 5.4 | 210 | 8.1 |
| Mercury [c] | 1.4 | 0.77 | 1.8 | 0.94 |
| Nickel [c] | 0.846*EXP(0.846* LN(hardness)+2.255) | 0.846*EXP(0.846* LN(hardness)+0.0584) | 64 | 22 |
| Selenium[a] | 20 | 5.0 | 290 | 71 |
| Silver [c] | 0.85*EXP(1.72* LN(hardness)-6.59) | NA | 1.9 | NA |
| Zinc [c] | 0.95*EXP(0.8473* LN(hardness)+0.884) | 0.95*EXP(0.8473* LN(hardness)+0.884) | 90 | 81 |
| **Pesticides/PCBs** | | | | |
| Aldrin | 3 | NA | 1.3 | NA |
| gamma - BHC (Lindane) | 0.95 | NA | 0.16 | NA |
| Chlordane | 2.4 | 0.0043 | 0.09 | 0.004 |
| Chlorpyrifos (Dursban) | 0.083 | 0.041 | 0.011 | 0.0056 |
| DDT and metabolites (DDE & DDD) [d] | 1.1 | 0.001 | 0.13 | 0.001 |
| Dieldrin | 0.24 | 0.056 | 0.71 | 0.0019 |
| Endosulfan [e] | 0.22 | 0.056 | 0.034 | 0.0087 |
| Endrin | 0.086 | 0.036 | 0.037 | 0.0023 |
| Heptachlor | 0.52 | 0.0038 | 0.053 | 0.0036 |
| Heptachlor Epoxide | 0.52 | 0.0038 | 0.053 | 0.0036 |
| Parathion | 0.065 | 0.013 | NA | NA |
| PCBs (Total) | 1.0 | 0.014 | 5.0 | 0.03 |
| Toxaphene | 0.73 | 0.0002 | 0.21 | 0.0002 |
| **Other Compounds** | | | | |

| Parameter | Freshwater Objectives (µg/l) | | Marine Objectives (µg/l) | |
|---|---|---|---|---|
| | **Acute** | **Chronic** | **Acute** | **Chronic** |
| **Cyanide (free)** | 22 | 5.2 | 1 | 1 |
| Pentachlorophenol | $e^{(1.005*pH-4.83)}$ | $e^{(1.005*pH-5.29)}$ | 13 | 7.9 |
| Indicator Parameters | | | | |
| Whole Effluent Toxicity | 0.3 Toxic Units $_{acute}$ | 1.0 Toxic Units $_{chronic}$ | 0.3 $TU_a$ | 1.0 $TU_c$ |

**Footnotes to Table 5:**

[a] **Total recoverable criteria**

[b] **Aluminum criteria listed are restricted to waters with pH between 6.5 and 9.0.**

[c] **Dissolved criteria**

[d] **Criteria apply to DDT and its metabolites (i.e., the total concentration of DDT and its metabolites should not exceed this value).**

[e] **Values were derived from data for endosulfan and are most appropriately applied to the sum of alpha-endosulfan and beta-endosulfan.**

**Criteria for cadmium, chromium (trivalent), copper, nickel, silver and zinc are hardness-dependent and are expressed as the dissolved form (see Section 3.10.3.C.2. on form of metal).**

TABLE 6: STREAM QUALITY OBJECTIVES FOR CARCINOGENS FOR THE DELAWARE RIVER ESTUARY AND BAY.

| Parameter | Freshwater Objectives (µg/l) | | Marine Objectives (µg/l) |
|---|---|---|---|
| | Fish & Water Ingestion | Fish Ingestion Only | Fish Ingestion Only |
| **Metals** | | | |
| Arsenic | * | NA | NA |
| **Pesticides/PCBs** | | | |
| Aldrin | 0.000049 | 0.000050 | 0.000050 |
| alpha – BHC | 0.0026 | 0.0049 | 0.0049 |
| beta – BHC | 0.0091 | 0.017 | 0.017 |
| Chlordane | 0.00080 | 0.00081 | 0.00081 |
| DDD | 0.00031 | 0.00031 | 0.00031 |
| DDE | 0.00022 | 0.00022 | 0.00022 |
| DDT | 0.00022 | 0.00022 | 0.00022 |
| Dieldrin | 0.000052 | 0.000054 | 0.000054 |
| Heptachlor | 0.000079 | 0.000079 | 0.000079 |
| Heptachlor Epoxide | 0.000039 | 0.000039 | 0.000039 |
| PCBs (Total) | 0.000016 | 0.000016 | 0.000016 |
| Toxaphene | 0.00028 | 0.00028 | 0.00028 |
| **Volatile Organic Compounds (VOCs)** | | | |
| Acrylonitrile | 0.051 | 0.25 | 0.25 |
| Benzene | 0.61 | 14 | 14 |
| Benzidine | 0.000086 | 0.00020 | 0.00020 |
| Bromoform | 4.3 | 140 | 140 |
| Bromodichloromethane | 0.55 | 17 | 17 |
| Carbon Tetrachloride | 0.23 | 1.6 | 1.6 |
| Chlorodibromomethane | 0.40 | 13 | 13 |
| Chloroform | 5.7 | 470 | 470 |
| 3,3 – Dichlorobenzidine | 0.021 | 0.028 | 0.028 |
| 1,2 – Dichloroethane | 0.38 | 37 | 37 |
| 1,2 – Dichloropropane | 0.50 | 15 | 15 |
| 1,3 – Dichloropropene | 0.34 | 21 | 21 |

| Parameter | Freshwater Objectives (µg/l) | | Marine Objectives (µg/l) |
|---|---|---|---|
| | Fish & Water Ingestion | Fish Ingestion Only | Fish Ingestion Only |
| Dichloromethane (Methylene Chloride) | * | 590 | 590 |
| Tetrachloroethylene | 0.69 | 3.3 | 3.3 |
| 1,1,2,2 – Tetrachloroethane | 0.17 | 4.0 | 4.0 |
| 1,1,2 – Trichloroethane | 0.59 | 16 | 16 |
| Trichloroethylene | 2.5 | 30 | 30 |
| Vinyl Chloride | 0.025 | 2.4 | 2.4 |
| **Polycyclic Aromatic Hydrocarbons (PAHs)** | | | |
| Benz[a]anthracene | 0.0038 | 0.18 | 0.18 |
| Benzo[b]fluoranthene | 0.038 | 0.18 | 0.18 |
| Benzo[k]fluoranthene | 0.38 | 1.8 | 1.8 |
| Benzo[a]pyrene | 0.0038 | 0.018 | 0.018 |
| Chrysene | 3.8 | 18 | 18 |
| Dibenz[a,h]anthracene | 0.0038 | 0.018 | 0.018 |
| Indeno[1,2,3-cd]pyrene | 0.038 | 0.18 | 0.18 |
| **Other Compounds** | | | |
| Bis (2-chloroethyl) ether | 0.03 | 0.53 | 0.53 |
| Bis (2-ethylhexyl) phthalate | 1.2 | 2.2 | 2.2 |
| 2,4 - Dinitrotoluene | 0.11 | 3.4 | 3.4 |
| 1,2 – Diphenylhydrazine | 0.036 | 0.2 | 0.2 |
| Hexachlorobenzene | 0.00028 | 0.00029 | 0.00029 |
| Hexachlorobutadiene | 0.44 | 18 | 18 |
| Hexachloroethane | 1.4 | 3.3 | 3.3 |
| Isophorone | 35 | 960 | 960 |
| N-Nitrosodi-N-butylamine | 0.0063 | 14 | 14 |
| N-Nitrosodi-N-methylamine | 0.00069 | 3.0 | 3.0 |
| N-Nitrosodiethylamine | 0.0008 | 1.24 | 1.24 |
| N-Nitrosodi-N-phenylamine | 3.3 | 6 | 6 |
| N-Nitrosodi-N-propylamine | 0.0050 | 0.51 | 0.51 |
| N-Nitrosopyrrolidine | 0.016 | 34 | 34 |

| Parameter | Freshwater Objectives (µg/l) | | Marine Objectives (µg/l) |
|---|---|---|---|
| | Fish & Water Ingestion | Fish Ingestion Only | Fish Ingestion Only |
| Pentachlorophenol | 0.27 | 3.0 | 3.0 |
| Dioxin (2,3,7,8 – TCDD) | 0.000000005 | 0.0000000051 | 0.0000000051 |
| 2,4,6 – Trichlorophenol | 1.4 | 2.4 | 2.4 |

*** The MCL for this compound applies in Zones 2 and 3 and is listed in Table 3.**

TABLE 7: STREAM QUALITY OBJECTIVES FOR SYSTEMIC TOXICANTS FOR THE DELAWARE RIVER ESTUARY AND BAY.

| Parameter | Freshwater Objectives (µg/l) | | Marine Objectives (µg/l) |
|---|---|---|---|
| | Fish & Water Ingestion | Fish Ingestion Only | Fish Ingestion Only |
| **Metals** | | | |
| Antimony | 5.6 | 640 | 640 |
| Arsenic | * | NA | NA |
| Beryllium | * | 420 | 420 |
| Cadmium | 3.4 | 16 | 16 |
| Chromium (trivalent) | * | 380,000 | 380,000 |
| Chromium (hexavalent) | 92 | NA | NA |
| Chromium (total) | NA | 750 | 750 |
| Mercury | 0.050 | 0.051 | 0.051 |
| Methylmercury | 0.3 mg/kg fish tissue | 0.3 mg/kg fish tissue | 0.3 mg/kg fish tissue |
| Nickel | 500 | 1,700 | 1,700 |
| Selenium | 170 | 4,200 | 4,200 |
| Silver | 170 | 40,000 | 40,000 |
| Thallium | 0.24 | 0.47 | 0.47 |
| Zinc | 7,400 | 26,000 | 26,000 |
| **Pesticides/PCBs** | | | |
| Aldrin | 0.025 | 0.025 | 0.025 |
| gamma - BHC (Lindane) | 0.98 | 1.8 | 1.8 |
| Chlordane | 0.14 | 0.14 | 0.14 |
| DDT and Metabolites (DDD and DDE) | 0.037 | 0.037 | 0.037 |
| Dieldrin | 0.041 | 0.043 | 0.043 |
| alpha –Endosulfan | 62 | 89 | 89 |
| beta- Endosulfan | 62 | 89 | 89 |
| Endosulfan Sulfate | 62 | 89 | 89 |
| Endrin | 0.059 | 0.060 | 0.060 |
| Endrin Aldehyde | 0.29 | 0.30 | 0.30 |
| Heptachlor | 0.18 | 0.18 | 0.18 |

| Parameter | Freshwater Objectives (µg/l) | | Marine Objectives (µg/l) |
|---|---|---|---|
| | Fish & Water Ingestion | Fish Ingestion Only | Fish Ingestion Only |
| Heptachlor Epoxide | 0.0046 | 0.0046 | 0.0046 |
| Total PCBs | 0.00839 | 0.00849 | 0.00149 |
| **Volatile Organic Compounds (VOCs)** | | | |
| Acrolein | 6.1 | 9.3 | 9.3 |
| Benzene | * | 3,100 | 3,100 |
| Bromoform | 650 | 9,600 | 9,600 |
| Bromodichloromethane | 680 | NA | NA |
| Dibromochloromethane | 680 | 21,000 | 21,000 |
| Carbon Tetrachloride | * | 150 | 150 |
| Chloroform | 68 | 2,100 | 2,100 |
| Chlorobenzene | 130 | 1,600 | 1,600 |
| 1,1 – Dichloroethylene | * | 7,100 | 7,100 |
| 1,2 - trans - Dichloroethylene | 140 | 10,000 | 10,000 |
| 1,3 – Dichloropropene | 1,000 | 63,000 | 63,000 |
| Ethylbenzene | 530 | 2,100 | 2,100 |
| Methyl Bromide | 47 | 1,500 | 1,500 |
| Methylene Chloride (Dichloromethane) | * | 260,000 | 260,000 |
| 1,1,2 – Trichloroethane | * | 3,600 | 3,600 |
| Tetrachloroethylene | * | 1,300 | 1,300 |
| Toluene | 1,300 | 15,000 | 15,000 |
| **Polycyclic Aromatic Hydrocarbons (PAHs)** | | | |
| Anthracene | 8,300 | 40,000 | 40,000 |
| Fluoranthene | 130 | 140 | 140 |
| Fluorene | 1,100 | 5,300 | 5,300 |
| Pyrene | 830 | 4,000 | 4,000 |
| **Other Compounds** | | | |
| Acenaphthene | 670 | 990 | 990 |
| Benzidine | 59 | 140 | 140 |

| Parameter | Freshwater Objectives (µg/l) | | Marine Objectives (µg/l) |
|---|---|---|---|
| | Fish & Water Ingestion | Fish Ingestion Only | Fish Ingestion Only |
| Bis (2-chloroisopropyl) ether | 1,400 | 65,000 | 65,000 |
| Bis (2-ethylhexyl) phthalate | * | 620 | 620 |
| Butylbenzyl phthalate | 1,500 | 1,900 | 1,900 |
| 2 – Chloronaphthalene | 1,000 | 1,600 | 1,600 |
| 2 – Chlorophenol | 81 | 150 | 150 |
| Cyanide | 140 | 140 | 140 |
| Dibutyl Phthalate | 2,000 | 4,500 | 4,500 |
| 1,2 – Dichlorobenzene | 420 | 1,300 | 1,300 |
| 1,3 – Dichlorobenzene | 420 | 1,300 | 1,300 |
| 1,4 – Dichlorobenzene | 63 | 190 | 190 |
| 2,4 – Dichlorophenol | 77 | 290 | 290 |
| Diethyl Phthalate | 17,000 | 44,000 | 44,000 |
| Dimethyl Phthalate | 270,000 | 1,100,000 | 1,100,000 |
| 2,4 – Dimethylphenol | 380 | 850 | 850 |
| 2,4 – Dinitrophenol | 69 | 5,300 | 5,300 |
| 2,4 – Dinitrotoluene | 68 | 2,100 | 2,100 |
| Hexachlorobenzene | 0.35 | 0.36 | 0.36 |
| Hexachlorocyclopentadiene | 40 | 1,100 | 1,100 |
| Hexachloroethane | 20 | 46 | 46 |
| Isophorone | 6,700 | 180,000 | 180,000 |
| 2-Methyl-4,6-dinitrophenol | 13 | 280 | 280 |
| Nitrobenzene | 17 | 690 | 690 |
| Pentachlorobenzene | 1.4 | 1.5 | 1.5 |
| Pentachlorophenol | * | 11,000 | 11,000 |
| Phenol | 10,000 | 860,000 | 860,000 |
| 1,2,4,5-Tetrachlorobenzene | 0.97 | 1.1 | 1.1 |
| 1,2,4 – Trichlorobenzene | 35 | 70 | 70 |
| 2,4,5-Trichlorophenol | 1,800 | 3,600 | 3,600 |
| Vinyl Chloride | * | 10,000 | 10,000 |

*** The MCL for this compound applies in Zones 2 and 3 and is listed in Table 3.**

# WATER QUALITY CRITERIA

## § 93.6. General water quality criteria

(a) Water may not contain substances attributable to point or nonpoint source discharges in concentration or amounts sufficient to be inimical or harmful to the water uses to be protected or to human, animal, plant or aquatic life.

(b) In addition to other substances listed within or addressed by this chapter, specific substances to be controlled include, but are not limited to, floating materials, oil, grease, scum and substances that produce color, tastes, odors, turbidity or settle to form deposits.

### Authority

The provisions of this § 93.6 amended under sections 5(b)(1) and 402 of The Clean Streams Law (35 P. S. § § 691.5(b)(1) and 691.402); and section 1920-A of The Administrative Code of 1929 (71 P. S. § 510-20).

### Source

The provisions of this § 93.6 amended March 10, 1989, effective March 11, 1989, 19 Pa.B. 968; amended November 17, 2000, effective November 18, 2000, 30 Pa.B. 6059; amended February 11, 2005, effective February 12, 2005, 35 Pa.B. 1197. Immediately preceding text appears at serial page (272025).

### Notes of Decisions

Denial of an application for a mine drainage permit cannot be based solely on the ground that the watershed has been designated a conservation area, but must be reviewed on the basis of whether its proposed operation would discharge an effluent which would result in the degradation of the water quality of a stream in terms of its protected uses designated under this section. *Doraville Enterprises v. Commonwealth*, 73 Pa. D. & C.2d 635, 645, 646 (1975)

The water quality criteria do not preclude the allowance of a reasonable mixing zone if there is no significant effect on the ambient temperature of the stream outside the mixing zone. *Bartram v. Parrish*, 74 Pa. D. & C.2d 627, 649 (1974).

### Cross References

This section cited in 25 Pa. Code § 71.64 (relating to small flow treatment facilities); 25 Pa. Code § 93.7 (relating to specific water quality criteria); and 25 Pa. Code § 96.3 (relating to water quality protection requirements).

## § 93.7. Specific water quality criteria.

(a) Table 3 displays specific water quality criteria and associated critical uses. The criteria associated with the Statewide water uses listed in § 93.4, Table 2 apply to all surface waters, unless a specific exception is indicated in § § 93.9a—93.9z. These exceptions will be indicated on a stream-by-stream or segment-by-segment basis by the words ‘‘Add’’ or ‘‘Delete’’ followed by the appropriate symbols described elsewhere in this chapter. Other specific water quality criteria apply to surface waters as specified in § § 93.9a—93.9z. All applicable criteria shall be applied in accordance with this chapter, Chapter 96 (relating to water quality standards implementation) and other applicable State and Federal laws and regulations.

### TABLE 3

| ***Parameter*** | *Symbol* | *Criteria* | *Critical Use** |
|---|---|---|---|
| Alkalinity | Alk | Minimum 20 mg/l as CaCO3, except where natural conditions are less. Where discharges are to waters with 20 mg/l or less alkalinity, the discharge should not further reduce the alkalinity of the receiving waters. | CWF, WWF, TSF, MF |
| Ammonia Nitrogen | Am | The maximum total ammonia nitrogen concentration (in mg/L) at all times shall be the numerical value given by: un-ionized ammonia nitrogen ($NH_3$-N) x ($\log^{-1}[pK_T-pH] + 1$), where:<br>un-ionized ammonia nitrogen = 0.12 x f(T)/f(pH)<br>$f(pH) = 1 + 10^{1.03(7.32-pH)}$<br>f(T) = 1, T ›= 10°C<br>$f(T) = 1 + 10^{(9.73-pH)}$ , T ‹ 10°C<br>$1 + 10(^{pK_T}-^{pH})$<br>and<br>$pK_T$ =<br><br>, the dissociation 0.090 +…constant for ammonia in water.<br>2730<br>(T + 273.2)<br><br>[]<br>The average total ammonia nitrogen concentration over any 30 consecutive days shall be less than or equal to the numerical value given by: | CWF, WWF, TSF, MF |

| | | | |
|---|---|---|---|
| | | un-ionized ammonia nitrogen ($NH_3$-N) x ($\log^{-1}[pK_T-pH]$ + 1), where:<br>un-ionized ammonia nitrogen = 0.025 x f(T)/f(pH)<br>f(pH) = 1, pH ›= 7.7<br>f(pH) = $10^{0.74(7.7-pH)}$, pH ‹ 7.7<br>f(T) = 1, T ›= 10°C<br>f(T) = 1 + $10^{(9.73-pH)}$ , T ‹ 10°C<br>1 + $10^{(pK_T-pH)}$<br>The pH and temperature used to derive the appropriate ammonia criteria shall be determined by one of the following methods:<br>1) Instream measurements, representative of median pH and temperature—July through September.<br>2) Estimates of median pH and temperature—July through September—based upon available data or values determined by the Department.<br>For purposes of calculating effluent limitations based on this value the accepted design stream flow shall be the actual or estimated lowest 30-consecutive-day average flow that occurs once in 10 years. | |
| Bacteria | $Bac_1$ | (Fecal coliforms/ 100 ml)—During the swimming season (May 1 through September 30), the maximum fecal coliform level shall be a geometric mean of 200 per 100 milliliters (ml) based on a minimum of five consecutive samples each sample collected on different days during a 30-day period. No more than 10% of the total samples taken during a 30-day period may exceed 400 per 100 ml. For the remainder of the year, the maximum fecal coliform level shall be a geometric mean of 2,000 per 100 milliliters (ml) based on a minimum of five consecutive samples collected on different days during a 30-day period. | WC |
| | $Bac_2$ | (Coliforms/100 ml)—Maximum of 5,000/100 ml as a monthly average value, no more than this number in more than 20 of the samples collected during a month, nor more than 20,000/100 ml in more than 5% of the samples. | PWS |
| Chloride | Ch | Maximum 250 mg/l. | PWS |
| Color | Col | Maximum 75 units on the platinum-cobalt scale; no other colors perceptible to the human eye. | PWS |
| Dissolved Oxygen | | The following specific dissolved oxygen criteria recognize the natural process of stratification in lakes, ponds and impoundments. These criteria apply to flowing freshwater and to the epilimnion of a naturally stratified lake, pond or impoundment. The hypolimnion in a naturally stratified lake, pond or impoundment is protected by the narrative water quality criteria in § 93.6 (relating to general water | |

| | | | |
|---|---|---|---|
| | | quality criteria). For nonstratified lakes, ponds or impoundments, the dissolved oxygen criteria apply throughout the lake, pond or impoundment to protect the critical uses. | |
| | $DO_1$ | For flowing waters, 7-day average 6.0 mg/l; minimum 5.0 mg/l. For naturally reproducing salmonid early life stages, applied in accordance with subsection (b), 7-day average 9.0 mg/l; minimum 8.0 mg/l. For lakes, ponds and impoundments, minimum 5.0 mg/l. | CWF |
| | $DO_2$ | 7-day average 5.5 mg/l; minimum 5.0 mg/l. | WWF |
| | $DO_3$ | For the period February 15 to July 31 of any year, 7-day average 6.0 mg/l; minimum 5.0 mg/l. For the remainder of the year, 7-day average 5.5 mg/l; minimum 5.0 mg/l. | TSF |
| Fluoride | F | Daily average 2.0 mg/l. | PWS |
| Iron | $Fe_1$ | 30-day average 1.5 mg/l as total recoverable. | CWF, WWF, TSF, MF |
| | $Fe_2$ | Maximum 0.3 mg/l as dissolved. | PWS |
| Manganese | Mn | Maximum 1.0 mg/l, as total recoverable. | PWS |
| Nitrite plus Nitrate | N | Maximum 10 mg/l as nitrogen. | PWS |
| Osmotic Pressure | OP | Maximum 50 milliosmoles per kilogram. | CWF, WWF, TSF, MF |
| pH | pH | From 6.0 to 9.0 inclusive. | CWF, WWF, TSF, MF |
| Phenolics (except § 307(a)(1) (33 U.S.C.A. § 1317(a)(1)), Priority Pollutants) | Phen | Maximum 0.005 mg/l. | PWS |
| Sulfate | Sul | Maximum 250 mg/l. | PWS |
| Temperature | | Maximum temperatures in the receiving water body resulting from heated waste sources regulated under Chapters 92a, 96 and other sources where temperature limits are necessary to protect designated and existing uses. | See the following table. |

| ***SYMBOL: CRITICAL USE: PERIOD*** | *$TEMP_1$ CWF* | *$TEMP_2$ WWF TEMPERATURE °F* | *$TEMP_3$ TSF* |
|---|---|---|---|
| January 1-31 | 38 | 40 | 40 |
| February 1-29 | 38 | 40 | 40 |
| March 1-31 | 42 | 46 | 46 |
| April 1-15 | 48 | 52 | 52 |
| April 16-30 | 52 | 58 | 58 |
| May 1-15 | 54 | 64 | 64 |
| May 16-31 | 58 | 72 | 68 |
| June 1-15 | 60 | 80 | 70 |
| June 16-30 | 64 | 84 | 72 |
| July 1-31 | 66 | 87 | 74 |
| August 1-15 | 66 | 87 | 80 |
| August 16-30 | 66 | 87 | 87 |
| September 1-15 | 64 | 84 | 84 |
| September 16-30 | 60 | 78 | 78 |
| October 1-15 | 54 | 72 | 72 |
| October 16-31 | 50 | 66 | 66 |
| November 1-15 | 46 | 58 | 58 |
| November 16-30 | 42 | 50 | 50 |
| December 1-31 | 40 | 42 | 42 |

| ***Parameter*** | *Symbol* | *Criteria* | *Critical Use** |
|---|---|---|---|
| Total Dissolved Solids | TDS | 500 mg/l as a monthly average value; maximum 750 mg/l. | PWS |
| Total Residual Chlorine | TRC | Four-day average 0.011 mg/l; 1-hour average 0.019 mg/l. | CWF, WWF, TSF, MF |

* Critical Use: The designated or existing use the criteria are designed to protect. More stringent site-specific criteria may be developed to protect other more sensitive, intervening uses.

(b) For naturally reproducing salmonids, protected early life stages include embryonic and larval stages and juvenile forms to 30 days after hatching. The $DO_1$ standard for naturally reproducing salmonid early life stages applies October 1 through May 31. The $DO_1$ standard for naturally reproducing salmonid early life stages applies unless it can be demonstrated to the

Department's satisfaction, that the following conditions are documented: 1) the absence of young of the year salmonids measuring less than 150 mm in the surface water; and 2) the absence of multiple age classes of salmonids in the surface water. These conditions only apply to salmonids resulting from natural reproduction occurring in the surface waters. Additional biological information may be considered by the Department which evaluates the presence or absence of early life stages.

(c) The list of specific water quality criteria does not include all possible substances that could cause pollution. For substances not listed, the general criterion that these substances may not be inimical or injurious to the existing or designated water uses applies. The Department will develop a criterion for any substance not listed in Table 3 that is determined to be inimical or injurious to existing or designated water uses using the best available scientific information, as determined by the Department.

(d) If the Department determines that natural quality of a surface water segment is of lower quality than the applicable aquatic life criteria in Table 3 or 5, the natural quality shall constitute the aquatic life criteria for that segment. All draft natural quality determinations will be published in the *Pennsylvania Bulletin* and be subject to a minimum 30-day comment period. The Department will maintain a publicly available list of surface waters and parameters where this subsection applies, and will, from time to time, submit appropriate amendments to § § 93.9a—93.9z.

**Authority**

The provisions of this § 93.7 amended under sections 5(b)(1) and 402 of The Clean Streams Law (35 P. S. § § 691.5(b)(1) and 691.402); and section 1920-A of The Administrative Code of 1929 (71 P. S. § 510-20).

**Source**

The provisions of this § 93.7 amended through March 8, 1985, effective February 16, 1985, 15 Pa.B. 907; amended March 10, 1989, effective March 11, 1989, 19 Pa.B. 968; amended February 11, 1994, effective February 12, 1994, 24 Pa.B. 832; amended April 3, 1998, effective November 4, 1995, 28 Pa.B. 1633; amended July 16, 1999, effective July 17, 1999, 29 Pa.B. 3720; amended November 17, 2000, effective November 18, 2000, 30 Pa.B. 6059; amended February 11, 2005, effective February 12, 2005, 35 Pa.B. 1197; amended January 5, 2007, effective January 6, 2007, 37 Pa.B. 11; amended May 15, 2009, effective May 16, 2009, 39 Pa.B. 2523; amended July 19, 2013, effective July 20, 2013, 43 Pa.B. 4080. Immediately preceding text appears at serial pages (343950) to (343955).

**Notes of Decisions**

The Department of Environmental Resources is not required to consider the economic consequences to a discharger in establishing water-quality based effluent limitations in a National Pollutant Discharge Elimination System (NPDES) Permit. *Mathies Coal Company v. Department of Environmental Resources*, 559 A.2d 506 (Pa. 1989).

The water quality standards in 25 Pa. Code § 93.7 are to be considered only as one of the major factors in developing discharge limitations, and neither these standards nor effluent limitations based on them in case-by-case DER determinations require a presumption of validity. *Lucas v. Department of Environmental Resources*, 420 A.2d 1 (Pa. Cmwlth. 1980).

**Cross References**

This section cited in 25 Pa. Code § 93.4b (relating to qualifying as High Quality or Exceptional Value Waters); 25 Pa. Code § 93.8d (relating to development on site-specific water quality criteria); and 25 Pa. Code § 96.3 (relating to water quality protection requirements).

## § 93.8a. Toxic substances.

(a) The waters of this Commonwealth may not contain toxic substances attributable to point or nonpoint source waste discharges in concentrations or amounts that are inimical to the water uses to be protected.

(b) Water quality criteria for toxic substances shall be established as described under Chapter 16 (relating to water quality toxics management strategy—statement of policy). The Department will develop water quality criteria for toxic substances not listed in Chapter 93, Table 5 in accordance with § 93.8d (relating to development of site-specific water quality criteria) and Chapter 16. Appendix A, Table 1A in Chapter 16 lists site-specific human health and aquatic life criteria that have been recently developed or adopted by the Department based on approved methodologies and the best scientific information currently available. The approved analytical procedures and detection limits for these substances will also be listed in Chapter 16. Chapter 16, along with changes made to it, is hereby specifically incorporated by reference.

(c) Water quality criteria for toxic substances which exhibit threshold effects will be established by application of margins of safety to the results of toxicity testing to prevent the occurrence of a threshold effect.

(d) Nonthreshold carcinogenic effects of toxic substances, will be controlled to a risk management level of one excess case of cancer in a population of 1 million ($1 \times 10^{-6}$) over a 70-year lifetime. Other nonthreshold effects of toxic substances will be controlled at a risk management level as determined by the Department.

(e) Water quality criteria for toxics shall be applied in accordance with Chapter 96 (relating to water quality standards implementation) and any other applicable State and Federal laws and regulations. For carcinogens, the design conditions shall result in a lifetime—70 years—average exposure corresponding to the risk management level specified in subsection (d).

(f) The Department will consider both the acute and chronic toxic impacts to aquatic life and human health.

(g) The Department may consider synergistic, antagonistic and additive toxic impacts.

(h) The Department will periodically, but at least once every 3 years, review, revise as necessary, and publish new or revised water quality criteria for toxic substances, and revised procedures for criteria development in the *Pennsylvania Bulletin*.

(i) A person challenging criteria established by the Department under this section shall have the burden of proof to demonstrate that the criteria does not meet the requirements of this section. In addition, a person who proposes an alternative site-specific criterion shall have the burden of proof to demonstrate that the site specific criterion meets the requirements of this section.

(j) The requirements for discharges to and antidegradation requirements for the Great Lakes System are as follows:

(1) *Definitions*. The following words and terms, when used in this section, have the following meanings, unless the context clearly indicates otherwise:

*BAF—Bioaccumulation Factor*—The ratio in liters per kilogram of a substance's concentration in tissues of an aquatic organism to its concentration in the ambient water, when both the organism and its food are exposed and the ratio does not change substantially over time.

*BCC—Bioaccumulative Chemical of Concern*—A chemical that has the potential to cause adverse effects which, upon entering the surface waters, by itself or its toxic transformation product, accumulates in aquatic organisms by a human health BAF greater than 1,000, after considering metabolism and other physiochemical properties that might enhance or inhibit bioaccumulation, under the methodology in 40 CFR Part 132 Appendix B (relating to Great Lakes Water Quality Initiative). Current BCCs are listed in 40 CFR 132.6, Table 6.A (relating to pollutants of initial focus in the Great Lakes Water Quality Initiative).

*Great Lakes System*—The streams, rivers, lakes and other bodies of surface water within the drainage basin of the Great Lakes in this Commonwealth.

*Open Waters of the Great Lakes*—The waters within the Great Lakes in this Commonwealth lakeward from a line drawn across the mouth of the tributaries to the lakes, including the waters enclosed by constructed breakwaters, but not including the connecting channels.

(2) *Total Maximum Daily Loads (TMDLs)*. TMDLs for Open Waters of the Great Lakes shall be derived following the procedures in 40 CFR Part 132, Appendix F, Procedure 3.D (relating to Great Lakes Water Quality Initiative implementation procedures).

(3) Statewide antidegradation requirements in this chapter and Chapter 96 (relating to water quality standards implementation) and in the Federal regulation in 40 CFR 131.32(a) (relating to Pennsylvania) as applicable, apply to all surface waters of the Great Lakes System.

(4) If, for any BCC, the quality of the surface water exceeds the levels necessary to support the propagation of fish, shellfish and wildlife and recreation in and on the waters, that quality shall be maintained and protected, unless the Department finds that allowing lower water quality is

necessary to accommodate important economic or social development in the area in which the surface water is located.

**Authority**

The provisions of this § 93.8a issued under sections 5 and 402 of The Clean Streams Law (35 P. S. § § 691.5 and 691.402); and section 1920-A of The Administrative Code of 1929 (71 P. S. § 510-20).

**Source**

The provisions of this § 93.8a adopted March 10, 1989, effective March 11, 1989, 19 Pa.B. 968; amended December 26, 1997, effective December 27, 1997, 27 Pa.B. 6799; amended November 17, 2000, effective November 18, 2000, 30 Pa.B. 6059; amended December 13, 2002, effective December 14, 2002, 32 Pa.B. 6098; amended May 15, 2009, effective May 16, 2009, 39 Pa.B. 2523. Immediately preceding text appears at serial pages (309714) to (309716).

**Cross References**

This section cited in 25 Pa. Code § 16.33 (relating to nonthreshold effects (cancer)); 25 Pa. Code § 93.4b (relating to qualifying as High Quality or Exceptional Value Waters); 25 Pa. Code § 93.8 (relating to development of site-specific water quality criteria for the protection of aquatic life); and 25 Pa. Code § 96.3 (relating to water quality protection requirements).

## § 93.8b. Metals criteria.

Dissolved criteria are footnoted in Table 5, and have been developed by applying the most current EPA conversion factors to the total recoverable criteria. The EPA factors are listed in the following Conversion Factors Table.

### Conversion Factors Table

| | *Chronic* | *Acute* | *Source* |
|---|---|---|---|
| Arsenic | 1.000 (As3+) | 1.000 (As3+) | 1,2 |
| Cadmium | 1.101672- (ln[H] x 0.041838) | 1.136672- (ln[H] x 0.041838) | 2 |
| Chromium III | 0.860 | 0.316 | 1,2 |
| Chromium VI | 0.962 | 0.982 | 1,2 |
| Copper | 0.960 | 0.960 | 1,2 |
| Lead* | | 1.46203- (ln[H] x 0.145712) | 2 |

| | | | |
|---|---|---|---|
| Mercury | 0.85 | 0.85 | 1,2 |
| Nickel | 0.997 | 0.998 | 1,2 |
| Selenium | 0.922 | 0.922 | 1 |
| Silver | N/A | 0.85 | 2 |
| Zinc | 0.986 | 0.978 | 1,2 |

* Conversion factor applies to both acute and chronic criteria.

Source 1—Final Water Quality Guidance for the Great Lakes System (60 FR 15366, March 23, 1995)

Source 2—Establishment of Numeric Criteria for Priority Pollutants; Revision of Metals Criteria—Interim Final Rule (60 FR 22229, May 4, 1995)

**Authority**

The provisions of this § 93.8b amended under sections 5(b)(1) and 402 of The Clean Streams Law (35 P. S. § § 691.5(b)(1) and 691.402); and section 1920-A of The Administrative Code of 1929 (71 P. S. § 510-20).

**Source**

The provisions of this § 93.8b adopted May 15, 2009, effective May 16, 2009, 39 Pa.B. 2523; amended July 19, 2013, effective July 20, 2013, 43 Pa.B. 4080. Immediately preceding text appears at serial pages (343957) to (343958).

**Cross References**

This section cited at 25 Pa. Code § 16.24 (relating to metals criteria).

## § 93.8c. Human health and aquatic life criteria for toxic substances.

(a) Table 5 and Chapter 16, Appendix A, Table 1A (relating to site-specific water quality criteria for toxic substances) list the aquatic life and human health criteria for toxic substances which the Department uses in development of effluent limitations in NPDES Permits and for other purposes. The human health criteria, which include probable modes of exposure (such as, but not limited to ingestion from drinking water and fish consumption, inhalation and dermal absorption), are further defined as to the specific effect (that is, cancer or threshold health effects). For those aquatic life criteria which are hardness related and specified as a formula, such as several of the heavy metals, the Department will use the specific hardness of the receiving stream after mixing with the waste discharge in calculating criteria on a case-by-case basis. The priority pollutant numbers (PP NO) used by the EPA to identify priority pollutants are

included in Table 5 for reference purposes. The toxics without a PP NO are nonpriority pollutants or State-derived criteria.

(b) Some of these criteria may be superseded for the Delaware Estuary, Ohio River Basin, Lake Erie Basin, and Genesee River Basin under interstate and international compact agreements with the Delaware River Basin Commission, Ohio River Valley Sanitation Commission and International Joint Commission, respectively. The criteria in Table 5 do not apply to the Great Lakes System. Water quality criteria for the Great Lakes System are contained in § 93.8e (relating to special criteria for the Great Lakes System) and Table 6 (relating to Great Lakes Aquatic Life and Human Health Criteria). Criteria may be developed for the Great Lakes System for substances other than those listed in § 93.8e under the methodologies in § 16.61 (relating to special provisions for the Great Lakes system).

## TABLE 5

## WATER QUALITY CRITERIA FOR TOXIC SUBSTANCES

| | | | Fish and Aquatic Life Criteria | | Human | |
|---|---|---|---|---|---|---|
| *PP NO* | *Chemical Name* | *CAS Number* | *Criteria Continuous Concentrations (ug/L)* | *Criteria Maximum Concentration (ug/L)* | *Health Criteria (ug/L)* | |
| 1M | ANTIMONY | 07440360 | 220 | 1100 | 5.6 | H |
| 2M | ARSENIC | 07440382 | 150 (As3+) | 340 (As3+) | 10 | H |
| 3M | BERYLLIUM | 07440417 | N/A | N/A | N/A | - |
| 4M | CADMIUM | 07440439 | *{1.101672-(ln[H]x0.041838)}x Exp(0.7409xln[H]-4.719) (ex: @H=100, CCC=0.25) | *{1.136672-(ln[H]x0.041838)}x Exp(1.0166xln[H]-3.924) (ex: @H=100, CMC=2.0) | N/A | - |
| 5M | CHROMIUM III | 16065831 | *0.860xExp(0.819xln[H]+0.6848) (ex: @H=100, CCC=74) | *0.316Exp(0.819xln[H]+3.7256) (ex: @H=100, CMC=570) | N/A | - |
| 5M | CHROMIUM VI | 18540299 | *10 | *16 | N/A | - |
| 6M | COPPER | 07440508 | *0.960xExp(0.8545xln[H]-1.702) | *0.960xExp(0.9422xln[H]-1.700) | N/A | - |

| | | | | | | |
|---|---|---|---|---|---|---|
| | | | (ex: @H=100, CCC=9.0) | (ex: @H=100, CMC=13) | | |
| 7M | LEAD | 07439921 | *{1.46203-(ln[H]x0.145712)}x Exp(1.273xln[H]-4.705) (ex: @H=100, CCC=2.5) | *{1.46203-(ln[H]x0.145712)}x Exp(1.273xln[H]-1.460) (ex: @H=100, CMC=65) | N/A | - |
| 8M | MERCURY | 07439976 | *0.77 (Hg2+) | *1.4 (Hg2+) | 0.05 | H |
| 9M | NICKEL | 07440020 | *0.997xExp(0.846xln[H]+0.0584) (ex: @H=100, CCC=52) | *0.998xExp(0.846xln[H]+2.255) (ex: @H=100, CMC=470) | 610 | H |
| 10M | SELENIUM | 07782492 | *4.6 | N/A | N/A | - |
| 11M | SILVER | 07440224 | N/A | *0.850xExp(1.72xln[H]-6.590) (ex: @H=100, CMC=3.2) | N/A | - |
| 12M | THALLIUM | 07440280 | 13 | 65 | 0.24 | H |
| 13M | ZINC | 07440666 | *0.986xExp(0.8473xln[H]+0.884) (ex: @H=100, CCC=120) | *0.978xExp(0.8473xln[H]+0.884) (ex: @H=100, CMC=120) | N/A | - |
| 14M | CYANIDE, FREE | 00057125 | 5.2 | 22 | 140 | H |
| 1A | 2-CHLOROPHENOL | 00095578 | 110 | 560 | 81 | H |
| 2A | 2,4-DICHLORO-PHENOL | 00120832 | 340 | 1700 | 77 | H |
| 3A | 2,4-DIMETHYL-PHENOL | 00105679 | 130 | 660 | 380 | H |
| 4A | 4,6-DINITRO-o-CRESOL | 00534521 | 16 | 80 | 13 | H |
| 5A | 2,4-DINITRO-PHENOL | 00051285 | 130 | 660 | 69 | H |
| 6A | 2-NITROPHENOL | 00088755 | 1600 | 8000 | N/A | - |
| 7A | 4-NITROPHENOL | 00100027 | 470 | 2300 | N/A | - |

| | | | | | | |
|---|---|---|---|---|---|---|
| 8A | P-CHLORO-m-CRESOL | 00059507 | 30 | 160 | N/A | - |
| 9A | PENTACHLORO-PHENOL | 00087865 | Exp(1.005x[pH]-5.134)<br>@pH= 6.5 7.8 9.0<br>Crit= 4.1 15 50 | Exp(1.005x[pH]-4.869)<br>@pH= 6.5 7.8 9.0<br>Crit= 5.3 19 65 | 0.27 | CRL |
| 10A | PHENOL | 00108952 | N/A | N/A | 10400 | H |
| 11A | 2,4,6-TRICHLOROPHENOL | 00088062 | 91 | 460 | 1.4 | CRL |
| 1V | ACROLEIN | 00107028 | 3.0 | 3.0 | 6.0 | H |
| 2V | ACRYLONITRILE | 00107131 | 130 | 650 | 0.051 | CRL |
| 3V | BENZENE | 00071432 | 130 | 640 | 1.2 | CRL |
| 5V | BROMOFORM | 00075252 | 370 | 1800 | 4.3 | CRL |
| 6V | CARBON TETRACHLORIDE | 00056235 | 560 | 2800 | 0.23 | CRL |
| 7V | CHLORO-BENZENE | 00108907 | 240 | 1200 | 130 | H |
| 8V | CHLORODIBRO-MO-METHANE | 00124481 | N/A | N/A | 0.40 | CRL |
| 9V | CHLOROETHANE | 00075003 | N/A | N/A | N/A | - |
| 10V | 2-CHLOROETHYL VINYL ETHER | 00110758 | 3500 | 18000 | N/A | - |
| 11V | CHLOROFORM | 00067663 | 390 | 1900 | 5.7 | CRL |
| 12V | DICHLOROBROMO- METHANE | 00075274 | N/A | N/A | 0.55 | CRL |
| 14V | 1,1-DICHLORO-ETHANE | 00075343 | N/A | N/A | N/A | - |
| 15V | 1,2-DICHLORO-ETHANE | 00107062 | 3100 | 15000 | 0.38 | CRL |
| 16V | 1,1-DICHLORO-ETHYLENE | 00075354 | 1500 | 7500 | 33.0 | H |

| | | | | | | |
|---|---|---|---|---|---|---|
| 17 V | 1,2-DICHLORO-PROPANE | 00078875 | 2200 | 11000 | N/A | - |
| 18 V | 1,3-DICHLORO-PROPYLENE | 00542756 | 61 | 310 | 0.34 | CRL |
| 19 V | ETHYLBENZENE | 00100414 | 580 | 2900 | 530 | H |
| 20 V | METHYL BROMIDE | 00074839 | 110 | 550 | 47 | H |
| 21 V | METHYL CHLORIDE | 0074873 | 5500 | 28000 | N/A | - |
| 22 V | METHYLENE CHLORIDE | 00075092 | 2400 | 12000 | 4.6 | CRL |
| 23 V | 1,1,2,2-TETRA-CHLOROETHANE | 00079345 | 210 | 1000 | 0.17 | CRL |
| 24 V | TETRACHLORO-ETHYLENE | 00127184 | 140 | 700 | 0.69 | CRL |
| 25 V | TOLUENE | 00108883 | 330 | 1700 | 1300 | H |
| 26 V | 1,2-trans-DICHLORO-ETHYLENE | 00156605 | 1400 | 6800 | 140 | H |
| — | 1,2 cis-DICHLORO-ETHYLENE | 00156592 | N/A | N/A | 12 | H |
| 27 V | 1,1,1-TRICHLORO-ETHANE | 00071556 | 610 | 3000 | N/A | - |
| 28 V | 1,1,2-TRICHLORO-ETHANE | 00079005 | 680 | 3400 | 0.59 | CRL |
| 29 V | TRICHLORO-ETHYLENE | 00079016 | 450 | 2300 | 2.5 | CRL |
| 31 V | VINYL CHLORIDE | 00075014 | N/A | N/A | 0.025 | CRL |
| 1B | ACENAPHTHENE | 00083329 | 17 | 83 | 670 | H |
| 2B | ACENAPHTHYLENE | 00208968 | N/A | N/A | N/A | - |
| 3B | ANTHRACENE | 00120127 | N/A | N/A | 8300 | H |

| | | | | | | |
|---|---|---|---|---|---|---|
| 4B | BENZIDINE | 00092875 | 59 | 300 | 0.000086 | CRL |
| 5B | BENZO(a)-ANTHRACENE | 00056553 | 0.1 | 0.5 | 0.0038 | CRL |
| 6B | BENZO(a)PYRENE | 00050328 | N/A | N/A | 0.0038 | CRL |
| 7B | 3,4-BENZO-FLUORANTHENE | 00205992 | N/A | N/A | 0.0038 | CRL |
| 8B | BENZO(ghi)-PERYLENE | 00191242 | N/A | N/A | N/A | - |
| 9B | BENZO(k)-FLUORANTHENE | 00207089 | N/A | N/A | 0.0038 | CRL |
| 10B | BIS(2-CHLORO-ETHOXY)METHANE | 00111911 | N/A | N/A | N/A | - |
| 11B | BIS(2-CHLORO-ETHYL)ETHER | 00111444 | 6000 | 30000 | 0.030 | CRL |
| 12B | BIS(2-CHLORO-ISOPROPYL)ETHER | 00108601 | N/A | N/A | 1400 | H |
| 13B | BIS(2-ETHYL-HEXYL)PHTHALATE | 00117817 | 910 | 4500 | 1.2 | CRL |
| 14B | 4-BROMOPHENYL PHENYL ETHER | 00101553 | 54 | 270 | N/A | - |
| 15B | BUTYLBENZYL PHTHALATE | 00085687 | 35 | 140 | 150 | H |
| 16B | 2-CHLORO-NAPHTHALENE | 00091587 | N/A | N/A | 1000 | H |
| 17B | 4-CHLORO-PHENYL PHENYL ETHER | 07005723 | N/A | N/A | N/A | - |
| 18B | CHRYSENE | 00218019 | N/A | N/A | 0.0038 | CRL |
| 19B | DIBENZO(a,h)-ANTHRACENE | 00053703 | N/A | N/A | 0.0038 | CRL |
| 20B | 1,2-DICHLORO-BENZENE | 00095501 | 160 | 820 | 420 for dichloro- | H |

| | | | | | | |
|---|---|---|---|---|---|---|
| | | | | | benzene | |
| 21B | 1,3-DICHLORO-BENZENE | 00541731 | 69 | 350 | See 20B | H |
| 22B | 1,4-DICHLORO-BENZENE | 00106467 | 150 | 730 | See 20B | H |
| 23B | 3,3-DICHLORO-BENZIDINE | 00091941 | N/A | N/A | 0.021 | CRL |
| 24B | DIETHYL PHTHALATE | 00084662 | 800 | 4000 | 17000 | H |
| 25B | DIMETHYL PHTHALATE | 00131113 | 500 | 2500 | 270000 | H |
| 26B | DI-N-BUTYL PHTHALATE | 00084742 | 21 | 110 | 2000 | H |
| 27B | 2,4-DINITRO-TOLUENE | 00121142 | 320 | 1600 | 0.05 for dinitro-toluene | CRL |
| 28B | 2,6-DINITRO-TOLUENE | 00606202 | 200 | 990 | See 27B | CRL |
| 29B | DI-N-OCTYL PHTHALATE | 00117840 | N/A | N/A | N/A | - |
| 30B | 1,2-DIPHENYL-HYDRAZINE | 00122667 | 3 | 15 | 0.036 | CRL |
| 31B | FLUORANTHENE | 00206440 | 40 | 200 | 130 | H |
| 32B | FLUORENE | 00086737 | N/A | N/A | 1100 | H |
| 33B | HEXACHLORO-BENZENE | 00118741 | N/A | N/A | 0.00028 | CRL |
| 34B | HEXACHLORO-BUTADIENE | 00087683 | 2 | 10 | 0.44 | CRL |
| 35B | HEXACHLORO-CYCLOPENTADIENE | 00077474 | 1 | 5 | 40 | H |
| 36B | HEXACHLORO-ETHANE | 00067721 | 12 | 60 | 1.4 | CRL |
| 37B | INDENO(1,2,3-cd)PYRENE | 00193395 | N/A | N/A | 0.0038 | CRL |
| 38B | ISOPHORONE | 00078591 | 2100 | 10000 | 35 | H |
| 39B | NAPHTHALENE | 00091203 | 43 | 140 | N/A | - |

| | | | | | | |
|---|---|---|---|---|---|---|
| 40B | NITROBENZENE | 00098953 | 810 | 4000 | 17 | H |
| 41B | N-NITROSO-DIMETHYLAMINE | 00062759 | 3400 | 17000 | 0.00069 | CRL |
| 42B | N-NITROSODI-N-PROPYLAMINE | 00621647 | N/A | N/A | 0.005 | CRL |
| 43B | N-NITROSO-DIPHENYLAMINE | 00086306 | 59 | 300 | 3.3 | CRL |
| 44B | PHENANTHRENE | 00085018 | 1 | 5 | N/A | - |
| 45B | PYRENE | 00129000 | N/A | N/A | 830 | H |
| 46B | 1,2,4-TRICHLORO-BENZENE | 00120821 | 26 | 130 | 35 | H |
| 1P | ALDRIN | 00309002 | 0.1 | 3 | 0.000049 | CRL |
| 2P | alpha-BHC | 00319846 | N/A | N/A | 0.0026 | CRL |
| 3P | beta-BHC | 00319857 | N/A | N/A | 0.0091 | CRL |
| 4P | gamma-BHC (LINDANE) | 00058899 | N/A | 0.95 | 0.098 | H |
| 5P | delta-BHC | 00319868 | N/A | N/A | N/A | - |
| 6P | CHLORDANE | 00057749 | 0.0043 | 2.4 | 0.00080 | CRL |
| 7P | 4,4-DDT | 00050293 | 0.001 | 1.1 | 0.00022 | CRL |
| 8P | 4,4-DDE | 00072559 | 0.001 | 1.1 | 0.00022 | CRL |
| 9P | 4,4-DDD | 00072548 | 0.001 | 1.1 | 0.00031 | CRL |
| 10P | DIELDRIN | 00060571 | 0.056 | 0.24 | 0.000052 | CRL |
| 11P | alpha-ENDOSUL-FAN | 00959988 | 0.056 | 0.22 | 62 for endosulfan | H |

| | | | | | | |
|---|---|---|---|---|---|---|
| 12P | beta-ENDOSULFAN | 33213659 | 0.056 | 0.22 | See 11P | H |
| 13P | ENDOSULFAN SULFATE | 01031078 | N/A | N/A | N/A | - |
| 14P | ENDRIN | 00072208 | 0.036 | 0.086 | 0.059 | H |
| 15P | ENDRIN ALDEHYDE | 07421934 | N/A | N/A | 0.29 | H |
| 16P | HEPTACHLOR | 00076448 | 0.0038 | 0.52 | 0.000079 | CRL |
| 17P | HEPTACHLOR EPOXIDE | 01024573 | 0.0038 | 0.5 | 0.000039 | CRL |
| 18P | PCB | | 0.014 | N/A | 0.000064 for PCBs | CRL |
| 25P | TOXAPHENE | 08001352 | 0.0002 | 0.73 | 0.00028 | CRL |
| PP | 2,3,7,8-TCDD | 01746016 | N/A | N/A | 5.0 E-9 | CRL |
| — | ACETONE | 00067641 | 86000 | 450000 | 3500 | H |
| — | ACRYLAMIDE | 00079061 | N/A | N/A | 0.07 | CRL |
| — | ALUMINUM | 07429905 | N/A | 750 | N/A | - |
| — | BARIUM | 07440393 | 4100 | 21000 | 2400 | H |
| — | BENZENE METADISULFONIC ACID | 00098486 | 1600000 | 2600000 | N/A | - |
| — | BENZENE MONOSULFONIC ACID | 00098113 | 1200000 | 2000000 | N/A | - |
| — | BENZYL CHLORIDE | 00100447 | N/A | N/A | 0.2 | CRL |
| — | BORON | 07440428 | 1600 | 8100 | 3100 | H |
| — | 2-BUTOXY ETHANOL | 00111762 | N/A | N/A | 700 | H |
| — | COBALT | 07440484 | 19 | 95 | N/A | - |

| | | | | | | |
|---|---|---|---|---|---|---|
| — | p-CRESOL | 00106445 | 160 | 800 | N/A | - |
| — | CYCLOHEXYLAMINE | 00108918 | N/A | N/A | 1000 | H |
| — | DIAZINON | 00333415 | 0.17 | 0.17 | N/A | - |
| — | FORMALDEHYDE | 00050000 | 440 | 2200 | 700 | H |
| — | 2-HEXANONE | 00591786 | 4300 | 21000 | N/A | - |
| — | LITHIUM | 07439932 | N/A | N/A | N/A | - |
| — | METHYLETHYL KETONE | 00078933 | 32000 | 230000 | 21000 | H |
| — | METHYLISO-BUTYL KETONE | 00108101 | 5000 | 26000 | N/A | - |
| — | METOLACHLOR | 51218452 | N/A | N/A | 69 | H |
| — | NONYLPHENOL | 00104405 | 6.6 | 28 | N/A | - |
| — | P-PHENOL SULFONIC ACID | 00098679 | 1400000 | 3500000 | N/A | - |
| — | I-PROPANOL | 00071238 | 46000 | 230000 | N/A | - |
| — | 2-PROPANOL | 00067630 | 89000 | 440000 | N/A | - |
| — | RESORCINOL | 01084603 | 7200 | 28000 | 2700 | H |
| — | STRONTIUM | 07440246 | N/A | N/A | 4000 | H |
| — | 1,2,3-TRICHLORO-PROPANE | 00096184 | N/A | N/A | 210 | H |
| — | 1,2,4-TRIMETHYLBENZENE | 00095636 | N/A | N/A | 72 | H |
| — | 1,3,5-TRIMETHYLBENZENE | 00108678 | N/A | N/A | 72 | H |
| — | VANADIUM | 07440622 | 100 | 510 | N/A | - |

| | | | | | | |
|---|---|---|---|---|---|---|
| — | XYLENE | 01330 207 | 210 | 1100 | 70000 | H |

# Acronyms and Footnotes to Table 5

* Indicates dissolved metal criterion; others are total recoverable metals. Each listed dissolved criterion in Table 5 is equal to the corresponding total recoverable criterion before rounding (from the EPA National Ambient Water Quality Criteria Documents) multiplied by the conversion factor (from the Conversion Factors Table); a criterion that is expressed as a hardness (H)-based equation is shown in Table 5 as the conversion factor (listed) multiplied by the hardness criterion equation; an example criterion at hardness=100mg/L is included.

CAS—Chemical Abstract Service number

CRL—Cancer risk level at $1 \times 10^{-6}$

H—Threshold effect human health criterion; incorporates additional uncertainty factor for some Group C carcinogens.

ln [H]—Natural Logarithm of the Hardness of stream as mg/l $CaCO_3$

ug/L—Micrograms per liter

N/A—Criterion not developed

PP NO—Priority Pollutant Number

**Authority**

The provisions of this § 93.8c amended under sections 5(b)(1) and 402 of The Clean Streams Law (35 P. S. § § 691.5(b)(1) and 691.402); and section 1920-A of The Administrative Code of 1929 (71 P. S. § 510-20).

**Source**

The provisions of this § 93.8c adopted May 15, 2009, effective May 16, 2009, 39 Pa.B. 2523; amended July 19, 2013, effective July 20, 2013, 43 Pa.B. 4080. Immediately preceding text appears at serial pages (343958) to (343968) and (349191).

**Cross References**

This section cited in 25 Pa. Code § 16.51 (relating to human health and aquatic life criteria); and 25 Pa. Code § 93.8d (relating to development of site-specific water quality criteria).

## § 93.8d. Development of site-specific water quality criteria.

(a) The Department will consider a request for site-specific criteria when one or more of the following apply:

(1) There exist site-specific biological or chemical conditions of receiving waters which differ from conditions upon which the water quality criteria were based.

(2) More stringent criteria are needed for a parameter listed in § 93.7 (relating to specific water quality criteria) to protect more sensitive, intervening uses.

(3) There exists a need for a site-specific criterion for a substance not listed in § 93.8c, Table 5 (relating to water quality criteria for toxic substances).

(b) The request for site-specific criteria must include the results of scientific studies for the purpose of:

(1) Defining the areal boundaries for application of the site-specific criteria which will include the potentially affected wastewater dischargers identified by the Department, through various means, including, but not limited to, the total maximum daily load (TMDL) process described in Chapter 96 (relating to water quality standards implementation) or biological assessments.

(2) Developing site-specific criteria which protect the surface water's existing and designated uses.

(c) Scientific studies shall be performed in accordance with the procedures and guidance in the Water Quality Standards Handbook (EPA 1994), as amended and updated, including: ''Guidance on the Determination and Use of Water-Effect Ratios for Metals'' (February 1994); and the ''Methodology for Deriving Ambient Water Quality Criteria for the Protection of Human Health'' (2000). Other guidance approved by the Department, which is based on other EPA-approved or scientifically defensible methodologies, may be used.

(d) Prior to conducting studies specified in subsections (b) and (c), a proposed plan of study shall be submitted to the Department for review, consideration and approval.

(e) Signed copies of all reports including toxicity test data shall be submitted to the Department within 60 days of completion of the tests.

(f) If the Department determines that site-specific criteria are appropriate in accordance with subsection (a), the Department will do the following:

(1) Publish the site-specific criterion in the *Pennsylvania Bulletin*, along with other special conditions under § 92a.82(b)(3) (relating to public notice of permit applications and draft

permits) and provide for public participation and public hearing in accordance with § § 92a.81, 92a.82, 92a.83 and 92a.85.

(2) Maintain publicly available lists of site-specific criteria.

(3) Submit the methodologies used for site-specific criteria development to the EPA's Regional Administrator for review and approval, within 30 days of Department's final action.

(4) Prepare a recommendation to the EQB in the form of proposed rulemaking, incorporating that criterion for the water body segment.

(g) If the Department determines that new Statewide criteria or modifications to Statewide criteria are appropriate, the Department will prepare a recommendation to the EQB in the form of proposed rulemaking, incorporating the criteria into this chapter. The new criteria and changes to the criteria will become effective following adoption by the EQB as final rulemaking and publication in the *Pennsylvania Bulletin*.

(h) A person challenging a Department action under this section shall have the burden of proof to demonstrate that the Department's action does not meet the requirements of this section.

## Authority

The provisions of this § 93.8d amended under sections 5(b)(1) and 402 of The Clean Streams Law (35 P. S. § § 691.5(b)(1) and 691.402); and section 1920-A of The Administrative Code of 1929 (71 P. S. § 510-20).

## Source

The provisions of this § 93.8d adopted May 15, 2009, effective May 16, 2009, 39 Pa.B. 2523; amended July 19, 2013, effective July 20, 2013, 43 Pa.B. 4080. Immediately preceding text appears at serial pages (349191) to (349192).

## Cross References

This section cited in 25 Pa. Code § 16.41 (relating to changes and additions); and 25 Pa. Code § 93.8a (relating to toxic substances).

APPENDIX D-19

PORTIONS OF DRBC 2016 ASSESSMENT REPORT

# 2016 Delaware River and Bay Water Quality Assessment

DELAWARE RIVER BASIN COMMISSION

Delaware River Basin Commission

DELAWARE • NEW JERSEY
PENNSYLVANIA • NEW YORK
UNITED STATES OF AMERICA

WWW.DRBC.NET

**August 2016**

**Acknowledgements**

This report was prepared by the Delaware River Basin Commission staff: Steven J. Tambini, P.E., Executive Director. John Yagecic and A. Ronald MacGillivray, Ph.D. were the principal authors of the report. Mr. Yagecic is the Supervisor of the Standards & Assessment Section in the Modeling, Monitoring, and Assessment Branch and a licensed professional engineer. Dr. MacGillivray is the DRBC Senior Environmental Toxicologist. Other contributing authors include Dr. Erik Silldorff, Senior Aquatic Biologist, Robert Limbeck, Senior Aquatic Biologist, and Karen Reavy, Information Specialist/GIS. Technical recommendations and support were provided by Namsoo Suk, Ph.D., Thomas Fikslin, Ph.D., and Elaine Panuccio.

**Suggested Citation**

DRBC. 2016 Delaware River and Bay Water Quality Assessment. Delaware River Basin Commission. West Trenton, NJ. August 2016.

### *Dissolved Oxygen*

Dissolved oxygen (DO) refers to the concentration of oxygen gas incorporated in water. Oxygen enters water both by direct absorption from the atmosphere, which is enhanced by turbulence, and as a by-product of photosynthesis from algae and aquatic plants. Sufficient DO is essential to growth and reproduction of aerobic aquatic life. Oxygen levels in water bodies can be depressed by the discharge of oxygen-depleting materials (measured in aggregate as biochemical oxygen demand, BOD, from wastewater treatment facilities), from the decomposition of organic matter including algae generated during nutrient-induced blooms, and from the oxidation of ammonia and other nitrogen-based compounds.

Table 11 below shows the assessment results for DO for all Zones. All criteria were met in Zones 1A, 1E, 3, and 4. In Zones 1C and 1D, all instantaneous minima criteria were met. Since only daytime spot measurements were made in Zones 1C and 1D, attainment of the 24-hour mean criteria was presumed since all measurements were above (met) that criteria. All seasonal mean criteria were met in Zones 2 through 5. The majority of observations met criteria in Zones 1B, 2, 5, and 6.

**Table 11: DO Assessment Results**

| Zone | % Observations Meeting Daily Mean Criteria | % Meeting Seasonal Criteria | % Meeting Instantaneous Minimum Criteria | Primary Data Source(s) | Notes |
|---|---|---|---|---|---|
| 1A | 100% | 100% (trout spawning minimum) | 100% | • National Park Service continuous monitor at Lordville | Continuous monitor data for 2013 and 2014 only. |
| 1B | 100% | N/A | 99.8% | • National Park Service continuous monitor at Barryville | No continuous monitor data before October 2012. Majority of data points below criteria are indicated as zero, which is suspect. Actual percentage meting criteria is likely closer to 100%. May 2015 data removed with consent of NPS. |

| Zone | % Observations Meeting Daily Mean Criteria | % Meeting Seasonal Criteria | % Meeting Instantaneous Minimum Criteria | Primary Data Source(s) | Notes |
|---|---|---|---|---|---|
| 1C | 100% (presumed) | N/A | 100% | • SRMP Monitoring<br>• USGS NJ | Daytime spot measurements only for assessment. Continuous monitor data is available beginning October 2014. Given that this duration covers only a small portion of the assessment window, we did not rely on this data. We did review the available continuous monitor data and it supports that the zone is fully meeting criteria. |
| 1D | 100% (presumed) | N/A | 100% | • SRMP / Lower Delaware Monitoring<br>• USGS (PA & NJ)<br>• PADEP | Daytime spot measurements only |
| 1E | 100% | N/A | 100% | • USGS 01463500 Delaware River at Trenton NJ<br>• USGS 01458500 Delaware River at Frenchtown NJ | Frenchtown data began in September 2014 |

| Zone | % Observations Meeting Daily Mean Criteria | % Meeting Seasonal Criteria | % Meeting Instantaneous Minimum Criteria | Primary Data Source(s) | Notes |
|---|---|---|---|---|---|
| 2 | 99.0% | 100% | N/A | • USGS 014670261 Delaware River nr Pennypack Woods, PA | No data before March 2011 |
| 3 | 100% | 100% | N/A | • USGS 01467200 Delaware R at Ben Franklin Bridge at Philadelphia | |
| 4 | 100% | 100% | N/A | • USGS 01477050 Delaware River at Chester, PA | |
| 5 | 98.5% | 100% | N/A | • USGS 01482800 Delaware River at Reedy Island Jetty, DE | |
| 6 | 90.8% (presumed) | N/A | 97.9% | • DRBC Boat Run<br>• Delaware Department Of Natural Resources And Environmental Control<br>• NJDEP Bureau of Marine Water Monitoring | Daytime spot measurements only |

Determining whether 24-hour criteria were met is most appropriately accomplished by comparing the daily mean DO from continuous monitors, which record data hourly or sub-hourly, and comparing these computed results to the criteria. Where only daytime spot measurements are available, we presumed that if the measured value is less than the 24-hour mean criterion, then the 24-hour mean is also likely to be below (not meet) the criterion. Zones 1D and 6 currently lack continuous water quality meters, and were assessed using daytime spot measurements only. Figure 3 below shows a comparison of daily mean and seasonal mean DO observations at the USGS monitor at the Ben Franklin Bridge (Zone 3) to the 24-hour mean and seasonal criteria.

**Table 12: pH Assessment Results**

| Zone | % Observations or Observations Days Meeting Criteria | Primary Data Source(s) | Notes |
|---|---|---|---|
| 1A | 70.77% | • National Park Service continuous monitor at Lordville | 2014 data only. Most violations were higher than the pH maximum (8.5). Only 2 violations observed below the pH minimum (6.5). |
| 1B | 62% | • National Park Service continuous monitor at Barryville | No data before September 2012 |
| 1C | 94.78% | • SRMP Monitoring | Daytime spot measurements only |
| 1D | 95.56% | • SRMP / Lower Delaware Monitoring<br>• USGS PA<br>• PADEP | Daytime spot measurements only. |
| 1E | 69.4% | • USGS 01463500 Delaware River at Trenton NJ | All violations were higher than the pH maximum (8.5). No violations observed below the pH minimum (6.5). Comparable results at Frenchtown (USGS 01458500) although slightly worse and a limited period of record beginning in September 2014. |
| 2 | 98.7% | • USGS 014670261 Delaware River nr Pennypack Woods, PA | No data before March 2011 |
| 3 | 100% | • USGS 01467200 Delaware R at Ben Franklin Bridge at Philadelphia | |
| 4 | 100% | • USGS 01477050 Delaware River at Chester, PA | |
| 5 | 100% | • USGS 01482800 Delaware River at Reedy Island Jetty, DE | |
| 6 | 98.4% | • DRBC Boat Run<br>• Delaware Department Of Natural Resources And Environmental Control<br>• New Jersey Bureau of Marine Water Monitoring | Daytime spot measurements only |

### *Turbidity*

According to Standard Methods (2005), "Turbidity in water is caused by suspended and colloidal matter such as clay, silt, finely divided organic and inorganic matter, and plankton and other microscopic organisms. Turbidity is an expression of the optical property that causes light to be scattered and absorbed rather than transmitted with no change in direction or flux level through the sample." From an observational perspective, water with low turbidity appears clear, while higher turbidity waters are cloudy or muddy. Table 13 below shows the assessment results for each Zone relative to DRBC's turbidity criteria.

**Table 13: Turbidity Assessment Results**

| Zone | % Observation Meeting Max Criteria | % Meeting 30-day Average Criteria | Primary Data Source(s) | Notes |
|---|---|---|---|---|
| 1A | 98.9% | 73.7% | • National Park Service continuous monitor at Lordville | No data before August 2012 |
| 1B | 100% | Insufficient Data to Assess | • SRMP Monitoring | Continuous monitor data not used at recommendation of owner. |
| 1C | 100% | Insufficient Data to Assess | • SRMP Monitoring | Daytime spot measurements only. The criteria for 30-day average is less than 20 TU. Although there was insufficient data to assess on a 30-day average basis, 97.6% of all observations were less than 20 TU. |
| 1D | 100% | Insufficient Data to Assess | • SRMP / Lower Delaware Monitoring | Daytime spot measurements only. The criteria for 30-day average is less than 20 TU. Although there was insufficient data to assess on a 30-day average basis, 98.6% of all observations were less than 20 TU. |
| 1E | 98.75% | 98.55% | • USGS 01463500 Delaware River at Trenton NJ | |
| 2 | 99.6% | 100% | • USGS 014670261 Delaware River nr Pennypack Woods, PA | No data before March 2011 |
| 3 | 100% | Insufficient Data to Assess | • DRBC Boat Run | Continuous Monitor Data discontinued after December 2011 |

| Zone | % Observation Meeting Max Criteria | % Meeting 30-day Average Criteria | Primary Data Source(s) | Notes |
|---|---|---|---|---|
| 4 | 100% | Insufficient Data to Assess | • DRBC Boat Run | No Turbidity on USGS Monitor, spot measurements only |
| 5 | 99.64% | Insufficient Data to Assess | • DRBC Boat Run<br>• Delaware Department Of Natural Resources And Environmental Control | Continuous Monitor Data discontinued after December 2011 |
| 6 | 96.9% | Insufficient Data to Assess | • DRBC Boat Run<br>• Delaware Department Of Natural Resources And Environmental Control | Spot measurements only |

Figure 5 below shows daily maximum turbidity compared to the instantaneous maximum criteria and 30-day mean turbidity compared to the 3-day mean criteria at the USGS monitor at Trenton, NJ in Zone 1E.

**Table 14: Temperature Assessment Results**

| Zone | % Observation Days Meeting Criteria | Primary Data Source(s) | Notes |
|---|---|---|---|
| 1A | Criteria applicable to Heat Dissipation Areas only for Zone 1 AU's | | |
| 1B | | | |
| 1C | | | |
| 1D | | | |
| 1E | | | |
| 2 | 87.35% | • Newbold (NOAA PORTS)<br>• Burlington (NOAA PORTS)<br>• Delaware River nr Pennypack Woods, PA (USGS NWIS) | NWIS Pennypack Woods site no data before March 2011 |
| 3 | 96.22% | • Philadelphia (NOAA PORTS)<br>• Ben Franklin Bridge (USGS NWIS)<br>• Tacony Palmyra (NOAA PORTS) | Tacony Palmyra temperature discontinued February 2013. |
| 4 | 92.52% | • Marcus Hook (NOAA PORTS)<br>• Chester (USGS NWIS)<br>• Fort Mifflin (USGS NWIS) | Marcus Hook temperature discontinued July 2015. Fort Mifflin during low flow only (313 observation days during 5 year data window). |
| 5 | 98.85% | • Reedy Island (USGS NWIS)<br>• Delaware City (NOAA PORTS) | |
| 6 | 99.18% | • Brandywine Shoal (NOAA PORTS)<br>• Lewes (NOAA PORTS)<br>• Ship John Shoal (NOAA PORTS) | Brandywine Shoal data from July 2011 through October 2012 only. |

Figure 6 below shows the comparison of water temperature observations in Zone 2 to the day-of-year temperature criteria. Note that observations in Zone 4 include continuous monitor data from NOAA PORTS monitors at Burlington and Newbold and USGS at Pennypack Woods.

Table 15 below shows the TDS criteria were met in all Zones except 1D. The TDS criteria in Zone 4 is expressed only as a percentage above background, and background in Zone 4 has not been defined. DRBC has no TDS criteria in Zones 5 and 6, presumably because TDS in marine waters is naturally high.

**Table 15: TDS Assessment Results**

| Zone | % Observations Meeting Criteria 500 mg/L | % Observations Meeting Criteria 133% of background | Primary Data Source(s) | Notes |
|---|---|---|---|---|
| 1A | 100% | 100% | • DRBC (SRMP)<br>• NY DECA<br>• PADEP | |
| 1B | 100% | 98.8% | • DRBC (SRMP)<br>• NY DECA<br>• PADEP | One apparent violation of 133% of background (90 mg/L) with no confirmatory violation |
| 1C | 100% | 100% | • DRBC (SRMP) | |
| 1D | 100% | 98% | • DRBC (SRMP)<br>• PADEP<br>• USGS-PAWSC | |
| 1E | 99.2% | 99.2% | • DRBC (SRMP)<br>• PADEP | One apparent violation of both criteria, but no confirmatory violation |
| 2 | 100% | 100% | • DRBC Boat Run | |
| 3 | 100% | N/A | • DRBC Boat Run | Background not defined in regulations for 133% of Background criteria |
| 4 | Does not apply | N/A | • DRBC Boat Run | Background not defined in regulations for 133% of Background criteria |
| 5 | No Criteria | | • DRBC Boat Run | |
| 6 | | | • DRBC Boat Run | |

### *Alkalinity*

According to Standard Methods (2005), "alkalinity of a water is its acid-neutralizing capacity. It is the sum of all the titratable bases." As shown in Table 16 below, alkalinity criteria were met in Zones 2 through 5.

**Table 16: Alkalinity Assessment Results**

| Zone | % Observations Meeting Criteria | Primary Data Source(s) | Notes |
|---|---|---|---|
| 1A | No Criteria | | |
| 1B | | | |
| 1C | | | |
| 1D | | | |
| 1E | 96.7% | • SRMP / Lower Delaware Monitoring<br>• PADEP | |
| 2 | 100% | • DRBC Boat Run | |
| 3 | 100% | • DRBC Boat Run | |
| 4 | 100% | • DRBC Boat Run<br>• PADEP | One data point, listed as 0, excluded as suspect |
| 5 | 100% | • DRBC Boat Run<br>• DNREC | One apparent violation (>100 mg/L) with no confirmatory violation |
| 6 | 90.3% | • DRBC Boat Run<br>• DNREC<br>• NJDEP | |

### *Toxic Pollutants*

The Delaware River Basin Commission (DRBC) stream quality objectives for human health and aquatic life in the tidal portion of Delaware Basin from the head of tide at Trenton, NJ to the mouth of the Delaware Bay (Zones 2 through 6) reflect current scientific information and harmonize DRBC criteria with basin states' criteria. DRBC criteria are used in the 2016 assessment for Zones 2 through 6, as described in Methodology for the 2016 Delaware River and Bay Water Quality Assessment Report. DRBC has adopted numeric toxics criteria in Zones 2 through 6. In addition, DRBC has a narrative standard applicable to waters of the Basin requiring that: *"the waters shall be substantially free from … substances in concentrations or combinations which are toxic or harmful to human, animal, plant, or aquatic life"*

The DRBC toxics criteria subcommittee recommended, at the November 19, 2014 meeting, a review of DRBC water quality assessment methodology for toxics in Zone 1. To ensure attainment and maintenance of downstream water quality standards and to facilitate consistent and efficient implementation and coordination of water quality-related management actions in shared interstate waters, an assessment methodology based on the most stringent of basin state standards in Zones 1A

exceedances and six chronic exceedances in Zone 1D computed with paired site specific hardness measured concurrently with the toxic analytical parameter and compared to numeric criteria values calculated with hardness measured at the nearest interstate control point (ICP) The apparent exceedances are low in both frequency and magnitude. For total copper measurements compared to total copper criteria (using conversion factors) one exceedance in Zone 1D and one in Zone 1E are observed.

- Exceedances of human health objectives (systemic) for mercury in Zone 1B.
- Exceedances of human health objectives (carcinogens) for total PCB in Zones 1A, 1B, 1D and 1E. PCB were not monitored in Zone 1C.

### *Biological Assessment*

Biological assessment results indicate reference-quality invertebrate communities in Zones 1A, 1B, 1C, and 1D. This includes "attaining" scores in the thermally altered upper mainstem Delaware River between Hancock and Callicoon (i.e., the upper portion of Zone 1A). It is important to note that the "background" rate of scores below 75.6 in reference reaches of the Delaware River in 10%.

Below the Lehigh River in Zone 1E (as was seen in past assessment cycles) 40% of the invertebrate samples fell below the impairment threshold (6 of 15 samples). For the interim methodology, DRBC has defined "impairment" as greater than 30% of sampling falling below the threshold (see Table 17). Therefore, Zone 1E is listed as not meeting the biocriteria for the assessment period.

To maximize the utility of the biological data, 2010 data collected outside the data window was included in this assessment.

**Table 17: Summary of Biological Assessment Results**

| Zone | Years of Data | Stations per Assessment Unit | % of samples in time window w/ 6-metric IBI < 75.6 |
|---|---|---|---|
| 1A | 2 (2010, 2012) | 4 | 0% |
| 1B | | 3 | 17% |
| 1C | | 4 | 13% |
| 1D | | 5 | 20% |
| 1E | | 7 | 40% |

## Public Water Supply

The public water supply designated use is assessed through evaluation of TDS, hardness, chlorides, odor, phenols, sodium, turbidity, systemic toxicants, carcinogens, and administrative drinking water closures. Table 18 below shows the Public Water Supply assessment results for the 2016 assessment. Additional detail on each evaluation is provided in the subsequent sections.

**Table 18: Public Water Supply Designated Use Assessment Results**

| Zone (AU) | TDS | Hardness | Chlorides | Odor | Phenols | Sodium | Turbidity | Systemic Toxicants | Carcinogens | Drinking water closures | 2016 Assessment | 2014 Assessment |
|---|---|---|---|---|---|---|---|---|---|---|---|---|
| 1A | + | N/A | N/A | ID | ID | N/A | -[A] | + | + | + | NS[B] | NS[B] |
| 1B | + | N/A | N/A | ID | + | N/A | + | + | + | + | S | NS[B] |
| 1C | + | N/A | N/A | ID | ID | N/A | + | + | + | + | S | S |
| 1D | + | N/A | N/A | ID | ID | N/A | + | + | + | + | S | S |
| 1E | + | N/A | N/A | ID | ID | N/A | -[A] | + | + | + | NS[B] | NS[B] |
| 2 | + | + | + | ID | + | N/A | -[A] | + | + | + | NS[B] | NS[B] |
| 3 | + | + | + | ID | + | + | + | + | + | + | S | NS[B] |

Notes:
**+** -- The Assessment unit meets WQC
**-** -- The Assessment unit does not meet WQC
A – Rate of criteria exceedance is below the historical threshold of 10%.
B – Based primarily on fewer than 10% exceedances of criteria
ID – Insufficient Data
N/A – Not applicable (no criteria in this assessment unit)
S – The use is supported in this Assessment Unit
NS – The use is not supported in this Assessment Unit

### *TDS*

A description of TDS and assessment against the TDS criteria are presented under the Aquatic Life designated use in the previous section.

### *Hardness*

Hardness is an integrated measure of divalent metallic cations. Measuring hardness in source water provides an indication of whether water softening will be desirable either in drinking water processing or in the finished drinking water at the point of use. Table 19 below shows that hardness criteria were met in all samples in Zones 2 and 3, where hardness criteria have been adopted.

**Table 19: Hardness Assessment Results**

| Zone | % Observations Meeting Criteria | Primary Data Source(s) | Notes |
|---|---|---|---|
| 1A | No Criteria | | |
| 1B | | | |
| 1C | | | |
| 1D | | | |
| 1E | | | |
| 2 | 100% (presumed) | • DRBC Boat Run | No individual observation exceeded criteria, therefore, attainment of 30-day mean criteria is presumed |
| 3 | 100% (presumed) | • DRBC Boat Run | |
| 4 | Use not applicable in this Zone | | |
| 5 | | | |
| 6 | | | |

### *Chlorides*

Chloride is one of the major inorganic ions in water and wastewater, and can impart a salty taste to drinking water at elevated concentrations. Chloride criteria are expressed as a 15-day mean in Zone 2 and a 30-day mean in Zone 3. Although sequential daily measurements are not made as part of routine surface water monitoring programs, no individual observation exceeded the numerical criteria (as shown in Table 20 below), therefore 100% attainment of the criteria is presumed.

**Table 20: Chlorides Assessment Results**

| Zone | % Observations Meeting Criteria | Primary Data Source(s) | Notes |
|---|---|---|---|
| 1A | No Criteria | | |
| 1B | | | |
| 1C | | | |
| 1D | | | |
| 1E | | | |
| 2 | 100% (presumed) | • DRBC Boat Run | No individual observation exceeded criteria, therefore, attainment of 15-day mean criteria is presumed |
| 3 | 100% (presumed) | • DRBC Boat Run | No individual observation exceeded criteria, therefore, attainment of 30-day mean criteria is presumed |
| 4 | Use not applicable in this Zone | | |
| 5 | | | |
| 6 | | | |

### *Odor*

No odor data was indicated in any of the data sets reviewed. Therefore, no assessment against odor criteria was made.

### *Phenols*

One attempted observation of phenol was made in Zone 1A and was not-detected. In Zone 1B, 20 attempted observations of phenol were made, with all results below criteria or not-detected. No data was found for Zones 1C, 1D, or 1E. In Zone 2, 28 attempted observations of phenol were made, all not-detected. In Zone 3, 17 attempted observations of phenol were made, all not-detected. The public water supply use does not apply to Zones 4, 5, or 6 (although phenol observations were attempted, nearly all not-detected).

### *Sodium*

A criterion for sodium exists only in Zone 3. A review of all available data shows 68 observations of sodium in Zone 3 with all values were below the 30-day mean criterion of 100 mg/L. Although the spacing of the data did not support computing a 30-day mean, since all values were below 100 mg/L, attainment of this criterion is presumed.

that the mean would be higher than the geometric mean. If the mean count was lower than criteria, we presume that the geometric mean would also be lower than criteria.

**Table 21: Primary and Secondary Contact Recreation Assessment Results**

| AU | Fecal Coliform | | Enterococcus | | 2016 Assessment | 2014 Assessment |
|---|---|---|---|---|---|---|
| | Primary | Secondary | Primary | Secondary | | |
| 1A | ID | ID | N/A | N/A | ID | S |
| 1B | + | + | N/A | N/A | S | S |
| 1C | + | + | N/A | N/A | S | S |
| 1D | + | + | N/A | N/A | S | S |
| 1E | + | + | N/A | N/A | S | S |
| 2 | + | + | + | + | S | NS |
| 3 | N/A | + | N/A | + | S | S |
| 4 (> RM 81.8) | N/A | + | N/A | + | S | S |
| 4 (< RM 81.8) | ID | ID | ID | ID | ID | ID |
| 5 | + | + | + | + | S | S |
| 6 | + | + | + | + | S | S |

Notes:
**+** -- The Assessment Unit meets WQC
**-** -- The Assessment Unit does not meet WQC
ID – Insufficient Data
N/A – Not applicable (no criteria in this assessment unit)
S – The use is supported in this Assessment Unit
NS – The use is not supported in this Assessment Unit

## Fish Consumption

The fish consumption designated use applies to all DRBC WQM Zones. The assessment criterion is based primarily on the presence of the Basin states' fish consumption advisories in the mainstem Delaware River and Bay for the assessment period. The presence of fish consumption advisories results in an assessment of "not supporting the designated use".
The following fish advisories reports were used:

| State | Fish Consumption Advisory Link |
|---|---|
| Delaware | http://www.dnrec.delaware.gov/fw/Fisheries/Pages/Advisories.aspx |
| New Jersey | http://www.state.nj.us/dep/dsr/fishadvisories/2013-final-fish-advisories.pdf |
| Pennsylvania | http://fishandboat.com/fishpub/summary/sumconsumption.pdf |
| New York | http://www.health.ny.gov/environmental/outdoors/fish/health_advisories/regional |

Table 22 below provides a summary of the consumption advisories issued by the states. For each assessment unit, advisories were issued. There is no assessment unit without an advisory, so the use is not supported in any zone.

**Table 22: Fish Consumption Advisory Summary**

| Fish Species | Contaminant | Fish Consumption Advisory – General Population | | | | | | | | | |
|---|---|---|---|---|---|---|---|---|---|---|---|
| | | 1A | 1B | 1C | 1D | 1E | 2 | 3 | 4 | 5 | 6 |
| **DELAWARE** | | | | | | | | | | | |
| All Finfish | PCBs, Dioxins and furans, Dieldrin | | | | | | | | | 1/year State line to C&D Canal | |
| Weakfish (all sizes), Bluefish (14 inches or less) | PCBs | | | | | | | | | | 12/year C&D Canal to mouth of bay |
| Bluefish (greater than 14 inches) | PCBs, Mercury | | | | | | | | | | 1/year C&D Canal to mouth of bay |
| Striped Bass, White Perch, American Eel, White Catfish, Channel Catfish | PCBs | | | | | | | | | | 2/year C&D Canal to mouth of bay |
| **NEW JERSEY** | | | | | | | | | | | |
| Smallmouth Bass | Not listed | | | 1/week | 1/week | 1/week | | | | | |
| White Sucker | Not listed | | | 1/month | 1/week | 1/week | | | | | |
| Largemouth Bass | Not listed | | | | | No restrictions | 1/month | 1/month | 1/month | | |
| Walleye | Not listed | | | 1/week | No restrictions | | | | | | |
| American Eel | Not listed | | | 1/month | 1/month | 1/month | 1/year | 1/year | 1/year | | 1/year |
| Channel Catfish | Not listed | | | No restrictions | No restrictions | 4/year | 1/year | 1/year | 1/year | | 1/year |
| White Catfish | Not listed | | | | 1/week | | 1/month | 1/month | 1/month | | 1/year |
| Striped Bass | Not listed | | | | | 4/year | 4/year | 4/year | 4/year | | 1/year |
| White Perch | Not listed | | | | | | 4/year | 4/year | 4/year | | 1/year |
| All Finfish | Not listed | | | | | | | | | 1/year (state line to C&D | |

| | | | | | | | | | | | |
|---|---|---|---|---|---|---|---|---|---|---|---|
| | | | | | | | | | | canal) | |
| Bluefish - larger than 24 inches or 6 lbs. | Not listed | | | | | | | | | | Do Not Eat |
| Bluefish - smaller than 24 inches or 6 lbs. | Not listed | | | | | | | | | | 1/year |
| Striped Bass, White Perch, American Eel, Channel Catfish, White Catfish | Not listed | | | | | | | | | | 1/year |
| Weakfish | Not listed | | | | | | | | | | 1/week |
| **NEW YORK** | | | | | | | | | | | |
| No advisories for the mainstem Delaware River, although advisories are listed for Cannonsville and Pepacton Reservoirs | | | | | | | | | | | |
| **PENNSYLVANIA** | | | | | | | | | | | |
| Smallmouth Bass | Mercury | 1/month | 1/month | 1/month | 1/month | 1/month | | | | | |
| Rock Bass | Mercury | 2/month | 2/month | 2/month | 2/month | 2/month | | | | | |
| American Eel | Mercury | 2/month | 2/month | 2/month | 2/month | 2/month | | | | | |
| | PCBs | | | | | | Do Not Eat | Do Not Eat | Do Not Eat | | |
| Carp | PCBs | | | | | | 6/Year | 6/Year | 6/Year | | |
| White Perch, Flathead Catfish, Channel Catfish | PCBs | | | | | | 1/month | 1/month | 1/month | | |
| Striped Bass (Over 28 inches) | PCBs | | | | | | 1/month | 1/month | 1/month | | |
| | | | | | | | | | | | |
| **Advisories in Place?** | | **Yes** | **Yes** | **Yes** | **Yes** | **Yes** | **Yes** | **Yes** | **Yes** | **Yes** | **Yes** |

# Appendix C: Toxic Pollutants Water Quality Assessment Details

## Table C1: Human Health Objectives (Toxics MCLs) Assessment Results

| Parameter | Maximum Contaminant Level (µg/l) | 2016 Assessment/Zones monitored |
|---|---|---|
| **Metals** | | |
| Arsenic | 10 | No exceedance (NE) Zones 1A, 1B or 6 |
| Barium | 2000 | No exceedances Zones 1A and 1B |
| Beryllium | 4 | Not monitored (NM) |
| Chromium (trivalent) | 100 | NE Zones 2 and 3 |
| Copper | 1300 | NE Zones 1, 2 and 3 |
| Lead | 15 | NE Zones 1, 2 and 3 |
| Selenium | 50 | NM |
| **Pesticides/PCBs** | | |
| alpha-BHC | 0.2 | NM |
| beta-BHC | 0.2 | NM |
| gamma - BHC (Lindane) | 2 | One measurement and exceedance Zone 1D<br>(no impairment)<br>NE Zone 2,3 (2012 low DL study) |
| 2,4-Dichloro-phenoxyacetic acid (2,4-D) | 70 | NM |

| Parameter | Maximum Contaminant Level (µg/l) | 2016 Assessment/Zones monitored |
|---|---|---|
| Methoxychlor | 40 | NE single sample 10/11/2011 Zone 1D |
| Toxaphene | 3 | One measurement and exceedance Zone 3<br>(no impairment) |
| Dioxin (2,3,7,8-TCDD) | 0.00003 | NE Zones 2, 3 (2012 low DL study) |
| 2,4,5 Trichloro-phenoxypropionic acid (2,4,5-TP-Silvex) | 50 | NM |
| **Volatile Organic Compounds (VOCs)** | | |
| Benzene | 5 | NE Zones 1, 2 and 3 |
| Carbon Tetrachloride | 5 | NE Zones 1, 2 and 3 |
| 1,2-Dichloroethane | 5 | Units reported as % |
| 1,1-Dichloroethylene | 7 | NE Zones 1, 2 and 3 |
| [1,2 - trans – Dichloroethene] 1,2 - trans - Dichloroethylene | 100 | NM |
| Dichloromethane (methylene chloride) | 5 | NE Zone 1B |
| Tetrachloroethylene (PCE) | 5 | NE Zone 1B |
| Toluene | 1000 | NE Zones 1, 2 and 3 |
| Total Trihalomethanes | 80 | NM |
| 1,1,1-Trichloroethane | 200 | NE Zones 1, 2 and 3 |
| 1,1,2-Trichloroethane | 5 | NE Zones 1, 2 and 3 |

| Parameter | Maximum Contaminant Level (µg/l) | 2016 Assessment/Zones monitored |
|---|---|---|
| Trichloroethylene | 5 | NE Zone 1B |
| Vinyl Chloride | 2 | NE Zone 1B |
| **Polycyclic Aromatic Hydrocarbons (PAHs)** | | |
| Benzo(a)Pyrene | 0.2 | ND > 3 ug/L |
| **Other Compounds** | | |
| Asbestos | 7 million fibers/L | NM |
| Bis(2-Ethylhexyl) Phthalate | 6 | NM |
| Fluoride | 4,000 | NE Zones 1, 2 and 3 |
| Nitrate | 10,000 | NE Zones 1, 2 and 3 |
| Pentachlorophenol | 1 | NE Zones 1, 2 and 3 |
| | | |

**Table C2: Aquatic Life Objectives Assessment Results**

| Parameter | Freshwater Objectives (µg/l) | | 2016 | Marine Objectives (µg/l) | | 2016 |
|---|---|---|---|---|---|---|
| | Acute | Chronic | | Acute | Chronic | |
| | Metals | | | | | |
| Aluminum[a,b] | 750 | 87 | Exceedances acute and chronic Zones 1B, 1E, 4 and chronic in Zone 1D | NA | NA | NM |
| Arsenic (trivalent)[c] | 340 | 150 | No exceedances 1A,1B | 69 | 36 | NE Zone 6 |
| Cadmium[c] | 0.651*EXP(1.0166* LN(hardness)-3.924) | 0.651*EXP(0.7409* LN(hardness)-4.719) | Exceedances of acute and chronic in Zone1B with hardness <25 mg/L and J flagged data (no impairment with unflagged data) | 40 | 8.8 | NM |
| Chromium (trivalent)[c] | 0.277*EXP(0.819* LN(hardness)+3.7256) | 0.277*EXP(0.819* LN(hardness)+0.6848) | NM | NA | NA | |
| Chromium (hexavalent)[c] | 16 | 11 | Single chronic exceedance in Zones 5 & 6 (no impairment) | 1,100 | 50 | NE |

| Parameter | Freshwater Objectives (µg/l) | | 2016 | Marine Objectives (µg/l) | | 2016 |
|---|---|---|---|---|---|---|
| | Acute | Chronic | | Acute | Chronic | |
| Copper [c,g] | 0.908*EXP(0.9422* LN(hardness)-1.7) | 0.908*EXP(0.8545* LN(hardness)-1.702) | Exceedances chronic using DRBC regulatory hardness but not site specific hardness Zone 5<br><br>Exceedances of acute and chronic in Zones 1A, 1B,and 1D; chronic in Zone 1E total copper | 4.8 | 3.1 | Exceed-ances Zones 5 and 6 |
| Lead [c] | 38 | 5.4 | NE | 210 | 8.1 | NE |
| Mercury [c] | 1.4 | 0.77 | NE Zones 1 – 5 | 1.8 | 0.94 | NE Zones 5 and 6 |
| Nickel [c] | 0.846*EXP(0.846* LN(hardness)+2.255) | 0.846*EXP(0.846* LN(hardness)+0.0584) | NE Zones 1A,1B, & Zones 2-5 | 64 | 22 | NE Zones 5-6 |
| Selenium[a] | 20 | 5.0 | NM | 290 | 71 | NM |
| Silver [c] | 0.85*EXP(1.72* LN(hardness)-6.59) | NA | NM | 1.9 | NA | NM |
| Zinc [c] | 0.95*EXP(0.8473* LN(hardness)+0.884) | 0.95*EXP(0.8473* LN(hardness)+0.884) | NE Zones 1A,1B, & Zones 2-5 | 90 | 81 | NE Zones 5-6 |

| Parameter | Freshwater Objectives (µg/l) | | 2016 | Marine Objectives (µg/l) | | 2016 |
|---|---|---|---|---|---|---|
| | Acute | Chronic | | Acute | Chronic | |
| | Pesticides/PCBs | | | | | |
| Aldrin | 3 | NA | NE Zones 2-5 | 1.3 | NA | NE Zones 5 and 6 |
| gamma - BHC (Lindane) | 0.95 | NA | One measurement and exceedance Zone 1D<br>(no impairment)<br>NE Zone 2,3 (2012 low DL study) | 1.3 | NA | NE Zones 5 and 6 |
| Chlordane | 2.4 | 0.0043 | NE Zones 2-5 | 0.16 | NA | NE Zone 5 and 6 |
| Chlorpyrifos (Dursban) | 0.083 | 0.041 | NM | 0.09 | 0.004 | NM |
| DDT and metabolites (DDE & DDD) [d] | 1.1 | 0.001 | NE Zones 2-5 | 0.011 | 0.0056 | NE Zones 5 and 6 |
| Dieldrin | 0.24 | 0.056 | NE Zones 2-5 | 0.13 | 0.001 | NE Zones 5 and 6 |
| Endosulfan [e] | 0.22 | 0.056 | NE Zones 2-5 | 0.71 | 0.0019 | NE Zones 5 |
| Endrin | 0.086 | 0.036 | NE Zones 2-5 | 0.034 | 0.0087 | NM |
| Heptachlor | 0.52 | 0.0038 | NE Zones 2-5 | 0.037 | 0.0023 | NE |

| Parameter | Freshwater Objectives (µg/l) | | 2016 | Marine Objectives (µg/l) | | 2016 |
|---|---|---|---|---|---|---|
| | Acute | Chronic | | Acute | Chronic | |
| Heptachlor Epoxide | 0.52 | 0.0038 | NE Zones 1D, 2,and 3<br><br>One measurement and exceedance Zone 4<br><br>(no impairment) | 0.053 | 0.0036 | One measure-ment and exceed-ance Zone 5<br><br>(no impair-ment) |
| Parathion | 0.065 | 0.013 | NM | 0.053 | 0.0036 | NM |
| PCBs (Total) | 1.0 | 0.014 | Not assessed ongoing TMDL | NA | NA | |
| Toxaphene | 0.73 | 0.0002 | One measurement and exceedance Zones 3<br><br>(no impairment) | 5.0 | 0.03 | One measure-ment and exceed-ance Zones 6<br><br>(no impair-ment) |
| | **Other Compounds** | | | | | |
| **Cyanide (free)** | 22 | 5.2 | | 1 | 1 | |

| Parameter | Freshwater Objectives (µg/l) | | 2016 | Marine Objectives (µg/l) | | 2016 |
|---|---|---|---|---|---|---|
| | Acute | Chronic | | Acute | Chronic | |
| Pentachlorophenol | $e^{(1.005*pH-4.83)}$ | $e^{(1.005*pH-5.29)}$ | NE ≥ 4 µg/L DL Zones 2-5 | 13 | 7.9 | NE ≥ 4 µg/L DL Zones 5-6 |
| | Indicator Parameters | | | | | |
| Whole Effluent Toxicity | 0.3 Toxic Units $_{acute}$ | 1.0 Toxic Units $_{chronic}$ | NE[f] | 0.3 $TU_a$ | 1.0 $TU_c$ | NE[f] |

[a] Total recoverable criterion

[b] Aluminum criteria listed should be restricted to waters with pH between 6.5 and 9.0.

[c] Dissolved Criterion

[d] This criterion applies to DDT and its metabolites (i.e., the total concentration of DDT and its metabolites should not exceed this value.

[e] This value was derived from data for endosulfan and is most appropriately applied to the sum of alpha-endosulfan and beta-endosulfan.

Criteria for cadmium, chromium(trivalent), copper, nickel, silver and zinc are hardness dependent and are expressed as the dissolved form ( see Section 3.10.3.C.2. for form of metal).

[f] Based on sampling in 2012, measured endpoints at eleven sites in the main stem of the Delaware River clearly did not indicate chronic toxicity to the tested species. However, three sites in main stem DRBC Water Quality Zone 5 warrant further assessment to confirm the existence and persistence of toxicity and to evaluate potential sources (chemical causes) of observed toxicity (http://www.state.nj.us/drbc/quality/toxics/wet/). As a follow-up to screening level toxicity tests

conducted in 2012, confirmatory samples were collected from DRBC Water Quality Zone 5 in the main stem Delaware River in 2013. Based on the test species tested and the measured endpoints, the water sampled did not confirm chronic toxicity to aquatic life at a biologically significant level.

[g] Copper concentrations continue to be near water quality criteria in the Delaware Estuary with several apparent exceedances of the marine criteria in Zones 5 and 6. In the non-tidal river, exceedances of acute and chronic site specific criteria for copper were reported two times in Zone 1A and one time in Zone 1B, two times for acute criterion and six times for chronic criterion in Zone 1D. For total copper measurements compared to total copper criteria (using conversion factors) one exceedance in Zone 1D and one in Zone 1E are observed. The apparent exceedances are low in both frequency and magnitude. Assessment is complicated by factors such as field sampling and analytical issues with contamination, the applicability of DRBC's freshwater or marine criteria, a need to assess revisions to the current freshwater and marine criteria, and the influence of other water quality attributes that influence the partitioning and toxicity of copper. Therefore, copper levels in the Delaware River should be considered of concern warranting additional monitoring and assessment. Suggested studies include additional synoptic sampling surveys targeted to copper and other metals with finer spatial and temporal scales, as well as, further assessment including the evaluation of water quality models such as the Biotic Ligand Model to assess the frequency of criteria exceedances and the factors contributing to those exceedances. Coordination among basin states and agencies should continue to ensure the use of the most appropriate methods and procedures for the conduct of monitoring studies in the Basin, and the harmonization of water quality criteria and assessment methodologies.

NA = not available; NE = no exceedances; E = exceedances; NM = not monitored; DL detection limit

**Table C3: Human Health Objectives (Carcinogens) Assessment Results**

| PARAMETER | FRESHWATER OBJECTIVES (µg/l) | | 2016 assessment | MARINE OBJECTIVES (µg/l) | 2016 assessment |
|---|---|---|---|---|---|
| | FISH & WATER INGESTION | FISH INGESTION ONLY | | FISH INGESTION ONLY | |
| **Metals** | | | | | |
| Arsenic | * | NA | | NA | |
| **Pesticides/PCBs** | | | | | |
| Aldrin | 0.000049 | 0.000050 | NE Zones 2-5 | 0.000050 | NE Zones 5-6 |
| alpha – BHC | 0.0026 | 0.0049 | NM | 0.0049 | NM |
| beta – BHC | 0.0091 | 0.017 | NM | 0.017 | NM |
| Chlordane | 0.00080 | 0.00081 | NE Zones 2-5 | 0.00081 | NE |
| DDD | 0.00031 | 0.00031 | Exceedances Zone 2-5 (low DL study) single sample day | 0.00031 | NE Zone 6 |
| DDE | 0.00022 | 0.00022 | Exceedances Zone 2 – 5 (low DL study) single sample day | 0.00022 | NE Zone 6 |
| DDT | 0.00022 | 0.00022 | Exceedances Zone 2 - 5 | 0.00022 | NE Zone 6 |

| PARAMETER | FRESHWATER OBJECTIVES (µg/l) | | 2016 assessment | MARINE OBJECTIVES (µg/l) | 2016 assessment |
|---|---|---|---|---|---|
| | FISH & WATER INGESTION | FISH INGESTION ONLY | | FISH INGESTION ONLY | |
| | | | (low DL study) single sample day | | |
| Dieldrin | 0.000052 | 0.000054 | Exceedances Zone 2 – 5 (low DL study) single sample day | 0.000054 | NE Zone 6 |
| Heptachlor | 0.000079 | 0.000079 | NE Zones 2-5 | 0.000079 | NE Zone 6 |
| | | | | | |
| | | | | | |
| Heptachlor Epoxide | 0.000039 | 0.000039 | Exceedances Zone 4 and 5 (low DL study) single sample day | 0.000039 | NE Zone 6 |
| PCBs (Total) | 0.0000444 | 0.0000448 | Not assessed ongoing TMDL<br>Exceedances in Zone 1 | 0.0000079 | Not assessed ongoing TMDL |
| Toxaphene | 0.00028 | 0.00028 | NE Zones 2-5 | 0.00028 | NE |

| PARAMETER | FRESHWATER OBJECTIVES (µg/l) | | 2016 assessment | MARINE OBJECTIVES (µg/l) | 2016 assessment |
|---|---|---|---|---|---|
| | FISH & WATER INGESTION | FISH INGESTION ONLY | | FISH INGESTION ONLY | |
| **Volatile Organic Compounds (VOCs)** | | | | | |
| Acrylonitrile | 0.051 | 0.25 | NM | 0.25 | NM |
| Benzene | 0.61 | 14 | NE Zones 2-5 | 14 | NE |
| Benzidine | 0.000086 | 0.00020 | NM | 0.00020 | NM |
| Bromoform(tribromomethane) | 4.3 | 140 | ND > 0.5 ug/L Zones 2-5 | 140 | ND > 0.5 ug/L Zones 5-6 |
| Bromodichloromethane | 0.55 | 17 | NM | 17 | NM |
| Carbon Tetrachloride | 0.23 | 1.6 | NE Zones 2-5 | 1.6 | NE Zone 6 |
| Chlorodibromomethane | 0.40 | 13 | NE Zone 1B, | 13 | NE Zone 6 |

| PARAMETER | FRESHWATER OBJECTIVES (µg/l) | | 2016 assessment | MARINE OBJECTIVES (µg/l) | 2016 assessment |
|---|---|---|---|---|---|
| | FISH & WATER INGESTION | FISH INGESTION ONLY | | FISH INGESTION ONLY | |
| | | | NE Zones 2-5 | | |
| Chloroform | 5.7 | 470 | NE 1B, 2,3 4, 5,6 | 470 | NE 5-6 |
| 3,3 - Dichlorobenzidine | 0.021 | 0.028 | ND > 4 ug/L | 0.028 | ND > 4 ug/L |
| 1,2 - Dichloroethane | 0.38 | 37 | Unit report % | 37 | |
| 1,2 - Dichloropropane | 0.50 | 15 | ND > 0.1 ug/L<br>Zones 2-5 | 15 | ND > 0.1 ug/L<br>Zones 5-6 |
| 1,3 - Dichloropropene | 0.34 | 21 | NM | 21 | NM |
| Dichloromethane (Methylene chloride) | * | 590 | NE | 590 | NE Zone 6 |
| Tetrachloroethylene | 0.69 | 3.3 | NE Zone 1B | 3.3 | NE |
| 1,1,2,2 - Tetrachloroethane | 0.17 | 4.0 | NE Zones 2-5 | 4.0 | NE |
| 1,1,2 - Trichloroethane | 0.59 | 16 | NE Zones 2-5 | 16 | NE |
| Trichloroethylene | 2.5 | 30 | NE Zones 2-5 | 30 | NE |

| PARAMETER | FRESHWATER OBJECTIVES (µg/l) | | 2016 assessment | MARINE OBJECTIVES (µg/l) | 2016 assessment |
|---|---|---|---|---|---|
| | FISH & WATER INGESTION | FISH INGESTION ONLY | | FISH INGESTION ONLY | |
| Vinyl Chloride | 0.025 | 2.4 | NE Zone 1B | 2.4 | NM |
| **Polycyclic Aromatic Hydrocarbons (PAHs)** | | | | | |
| Benz[a]anthracene | 0.0038 | 0.18 | ND > 2 ug/L Zones 2 - 5 | 0.18 | ND > 2 ug/L |
| Benzo[b]fluoranthene | 0.038 | 0.18 | ND > 2 ug/L Zones 2 - 5 | 0.18 | ND > 2 ug/L |
| Benzo[k]fluoranthene | 0.38 | 1.8 | ND > 1 ug/L Zones 2-5 | 1.8 | NE Zones 5 - 6 |
| Benzo[a]pyrene | 0.0038 | 0.018 | ND > 3 ug/L Zones 2 - 5 | 0.018 | ND > 3 ug/L |
| Chrysene | 3.8 | 18 | NE Zones 2 - 5 | 18 | NE Zones 5 - 6 |
| Dibenz[a,h]anthracene | 0.0038 | 0.018 | ND > 5 ug/L Zones 2-5 | 0.018 | ND > 5 ug/L |
| Indeno[1,2,3-cd]pyrene | 0.038 | 0.18 | ND > 5 ug/L Zones 2-5 | 0.18 | ND > 5 ug/L |
| **Other Compounds** | | | | | |
| Bis (2-chloroethyl) ether | 0.03 | 0.53 | ND > 2 ug/L Zones 2-5 | 0.53 | ND > 2 ug/L Zones 5-6 |
| Bis (2-ethylhexyl) phthalate | 1.2 | 2.2 | NM | 2.2 | NM |

| PARAMETER | FRESHWATER OBJECTIVES (µg/l) | | 2016 assessment | MARINE OBJECTIVES (µg/l) | 2016 assessment |
|---|---|---|---|---|---|
| | FISH & WATER INGESTION | FISH INGESTION ONLY | | FISH INGESTION ONLY | |
| 2,4 - Dinitrotoluene | 0.11 | 3.4 | ND > 1 ug/L Zones 2 – 3<br>NE Zones 4-5 | 3.4 | NE<br>Zones 5-6 |
| 1,2 - Diphenylhydrazine | 0.036 | 0.2 | NM | 0.2 | NM |
| Hexachlorobenzene | 0.00028 | 0.00029 | ND > 2 ug/L Zones 2-5 | 0.00029 | ND > 2 ug/L Zones 5 -m6 |
| Hexachlorobutadiene | 0.44 | 18 | ND > 2 ug/L Zones 2–3<br>NE Zones 4 - 5 | 18 | NE Zones 5-6 |
| Hexachloroethane | 1.4 | 3.3 | ND > 3 ug/L Zones 2–3<br>NE Zones 4-5 | 3.3 | NE Zones 5-6 |
| Isophorone | 35 | 960 | NE<br>Zones 2-5 | 960 | NE Zones 5-6 |
| N-Nitrosodi-N-butylamine | 0.0063 | 14 | NM | 14 | NM |
| N-Nitrosodi-N-methylamine | 0.00069 | 3.0 | NM | 3.0 | NM |
| N-Nitrosodiethylamine | 0.0008 | 1.24 | NM | 1.24 | NM |
| N-Nitrosodi-N-phenylamine | 3.3 | 6 | NE Zones 2- | 6 | NE Zones 5-6 |

| PARAMETER | FRESHWATER OBJECTIVES (µg/l) | | 2016 assessment | MARINE OBJECTIVES (µg/l) | 2016 assessment |
|---|---|---|---|---|---|
| | FISH & WATER INGESTION | FISH INGESTION ONLY | | FISH INGESTION ONLY | |
| | | | 5 | | |
| N-Nitrosodi-N-propylamine | 0.0050 | 0.51 | ND > 2 ug/L Zones 2-5 | 0.51 | ND > 2 ug/L Zones 5-6 |
| N-Nitrosopyrrolidine | 0.016 | 34 | NM | 34 | NM |
| Pentachlorophenol | 0.27 | 3.0 | | 3.0 | |
| Dioxin (2,3,7,8 – TCDD) | 0.000000005 | 0.0000000051 | One Zone 5 exceedance in 2012 (low DL study) (no impairment) | 0.0000000051 | NE |
| 2,4,6 - Trichlorophenol | 1.4 | 2.4 | NE Zones 2-5 | 2.4 | NE Zones 5-6 |

* The MCL for this compound applies in Zones 2 and 3 and is listed in Table 3.

NA = not available; NE = No Exceedance; NM = Not Monitored

**Table C4: Human Health Objectives (Systemic Toxicants) Assessment Results**

| PARAMETER | FRESHWATER OBJECTIVES (µg/l) | | 2016 | MARINE OBJECTIVES (µg/l) | 2016 |
|---|---|---|---|---|---|
| | FISH & WATER INGESTION | FISH INGESTION ONLY | | FISH INGESTION ONLY | |
| **Metals** | | | | | |
| **Antimony** | 5.6 | 640 | NE Zones 2-5 | 640 | NE Zones 5-6 |
| **Arsenic** | * | NA | | NA | |
| **Beryllium** | * | 420 | NM | 420 | NM |
| **Cadmium** | 3.4 | 16 | NE Zones 1A, 1B<br>NM Zones 2 - 5 | 16 | NM Zones 5-6 |
| **Chromium (trivalent)** | * | 380,000 | NM | 380,000 | NM |
| **Chromium (hexavalent)** | 92 | NA | NE Zones 2-5 | NA | NE Zones 5 |
| **Chromium (total)** | NA | 750 | NM | 750 | NM |
| **Mercury** | 0.050 | 0.051 | NE | 0.051 | NE |
| **Methylmercury a** | 0.3 mg/kg fish tissue | 0.3 mg/kg fish tissue | NE | 0.3 mg/kg fish tissue | NE |
| **Nickel** | 500 | 1,700 | NE Zones 1A, 1B,1D, 1E & Zones 2-5 | 1,700 | NE Zones 5-6 |
| **Selenium** | 170 | 4,200 | NE Zones 1A & 1B | 4,200 | NM |

| PARAMETER | FRESHWATER OBJECTIVES (µg/l) | | 2016 | MARINE OBJECTIVES (µg/l) | 2016 |
|---|---|---|---|---|---|
| | FISH & WATER INGESTION | FISH INGESTION ONLY | | FISH INGESTION ONLY | |
| **Silver** | 170 | 40,000 | NE Zones 1A & 1B | 40,000 | NM |
| **Thallium** | 0.24 | 0.47 | NM | 0.47 | NM |
| **Zinc** | 7,400 | 26,000 | NE Zones 1A,1B, 1D, 1E & Zones 2-5 | 26,000 | NE Zones 5-6 |
| **Pesticides/PCBs** | | | | | |
| **Aldrin** | 0.025 | 0.025 | NE | 0.025 | NE |
| **gamma - BHC (Lindane)** | 0.98 | 1.8 | One measurement and exceedance Zone 1D<br>(no impairment)<br>NE Zone 2,3 (2012 low DL study) | 1.8 | NE |
| **Chlordane** | 0.14 | 0.14 | NE | 0.14 | NE |
| **DDT and Metabolites (DDD and DDE)** | 0.037 | 0.037 | NE | 0.037 | NE |
| **Dieldrin** | 0.041 | 0.043 | NE | 0.043 | NE |
| **alpha -Endosulfan** | 62 | 89 | NE | 89 | NE |

| PARAMETER | FRESHWATER OBJECTIVES (µg/l) | | 2016 | MARINE OBJECTIVES (µg/l) | 2016 |
|---|---|---|---|---|---|
| | FISH & WATER INGESTION | FISH INGESTION ONLY | | FISH INGESTION ONLY | |
| **beta- Endosulfan** | 62 | 89 | NE | 89 | NE |
| **Endosulfan Sulfate** | 62 | 89 | NE | 89 | NE |
| **Endrin** | 0.059 | 0.060 | NE | 0.060 | NE |
| **Endrin Aldehyde** | 0.29 | 0.30 | NE | 0.30 | NE |
| **Heptachlor** | 0.18 | 0.18 | NE | 0.18 | NE |
| **Heptachlor Epoxide** | 0.0046 | 0.0046 | NE | 0.0046 | NE |
| **Total PCBs** | 0.00839 | 0.00849 | Not assessed ongoing TMDL<br>NE Zone 1 | 0.00149 | Not assessed ongoing TMDL |
| **Volatile Organic Compounds (VOCs)** | | | | | |
| **Acrolein** | 6.1 | 9.3 | NM | 9.3 | NM |
| **Benzene** | * | 3,100 | NE Zones 2-5 | 3,100 | NE Zones 5-6 |
| **Bromoform (tribromomethane)** | 650 | 9,600 | NE Zones 2-5 | 9,600 | NE Zones 5-6 |
| **Bromodichloromethane** | 680 | NA | NM | NA | NM |
| **Dibromochloromethane** | 680 | 21,000 | NM | 21,000 | NM |
| **Carbon Tetrachloride** | * | 150 | NE Zones 2-5 | 150 | NE Zones 5-6 |

| PARAMETER | FRESHWATER OBJECTIVES (µg/l) | | 2016 | MARINE OBJECTIVES (µg/l) | 2016 |
|---|---|---|---|---|---|
| | FISH & WATER INGESTION | FISH INGESTION ONLY | | FISH INGESTION ONLY | |
| **Chloroform** | 68 | 2,100 | NE Zones 1B, 2,3,4,5 | 2,100 | NE Zones 5-6 |
| **Chlorobenzene** | 130 | 1,600 | NE Zones 2-5 | 1,600 | NE Zones 5-6 |
| **1,1 - Dichloroethylene** | * | 7,100 | NE | 7,100 | NE |
| **1,2 - trans - Dichloroethylene** | 140 | 10,000 | NM | 10,000 | NM |
| **1,3 - Dichloropropene** | 1,000 | 63,000 | NM | 63,000 | NM |
| **Ethylbenzene** | 530 | 2,100 | NE Zones 2-5 | 2,100 | NE Zones 5-6 |
| **Methyl Bromide** | 47 | 1,500 | NE Zones 2-5 | 1,500 | NE Zones 5-6 |
| **Methylene Chloride** | * | 260,000 | NE | 260,000 | NE |
| **1,1,2 – Trichloroethane** | * | 3,600 | NE | 3,600 | NE |
| **Tetrachloroethylene** | * | 1,300 | NE | 1,300 | NE |
| **Toluene** | 1,300 | 15,000 | NE | 15,000 | NE |
| **Polycyclic Aromatic Hydrocarbons (PAHs)** | | | | | |
| **Anthracene** | 8,300 | 40,000 | NE Zones 2-5 | 40,000 | NE Zones 5-6 |
| **Fluoranthene** | 130 | 140 | NE Zones 2-5 | 140 | NE Zones 5-6 |

| PARAMETER | FRESHWATER OBJECTIVES (µg/l) | | 2016 | MARINE OBJECTIVES (µg/l) | 2016 |
|---|---|---|---|---|---|
| | FISH & WATER INGESTION | FISH INGESTION ONLY | | FISH INGESTION ONLY | |
| **Fluorene** | 1,100 | 5,300 | NE Zones 2-5 | 5,300 | NE Zones 5-6 |
| **Pyrene** | 830 | 4,000 | NE Zones 2-5 | 4,000 | NE Zones 5-6 |
| **Other Compounds** | | | | | |
| **Acenaphthene** | 670 | 990 | NE Zones 2-5 | 990 | NE Zones 5-6 |
| **Benzidine** | 59 | 140 | NM | 140 | NM |
| **Bis (2-chloroisopropyl) ether** | 1,400 | 65,000 | NE Zones 2-5 | 65,000 | NE Zones 5-6 |
| **Bis (2-ethylhexyl) phthalate** | * | 620 | NM | 620 | NM |
| **Butylbenzyl phthalate** | 1,500 | 1,900 | NE Zones 2-5 | 1,900 | NE Zones 5-6 |
| **2 - Chloronaphthalene** | 1,000 | 1,600 | NM | 1,600 | NM |
| **2 - Chlorophenol** | 81 | 150 | NM | 150 | NM |
| **Cyanide** | 140 | 140 | NM | 140 | NM |
| **Dibutyl Phthalate** | 2,000 | 4,500 | NM | 4,500 | NM |
| **1,2 - Dichlorobenzene** | 420 | 1,300 | NM | 1,300 | NM |
| **1,3 - Dichlorobenzene** | 420 | 1,300 | NM | 1,300 | NM |

| PARAMETER | FRESHWATER OBJECTIVES (µg/l) | | 2016 | MARINE OBJECTIVES (µg/l) | 2016 |
|---|---|---|---|---|---|
| | FISH & WATER INGESTION | FISH INGESTION ONLY | | FISH INGESTION ONLY | |
| **1,4 - Dichlorobenzene** | 63 | 190 | NM | 190 | NM |
| **2,4 - Dichlorophenol** | 77 | 290 | NM | 290 | NM |
| **Diethyl Phthalate** | 17,000 | 44,000 | NE Zones 2-5 | 44,000 | NE Zones 5-6 |
| **Dimethyl Phthalate** | 270,000 | 1,100,000 | NE Zones 2-5 | 1,100,000 | NE Zones 5-6 |
| **2,4 - Dimethylphenol** | 380 | 850 | NE Zones 2-5 | 850 | NE Zones 5-6 |
| **2,4 - Dinitrophenol** | 69 | 5,300 | NE Zones 2-5 | 5,300 | NE Zones 5-6 |
| **2,4 - Dinitrotoluene** | 68 | 2,100 | NE Zones 2-5 | 2,100 | NE Zones 5-6 |
| **Hexachlorobenzene** | 0.35 | 0.36 | NE Zones 2-5 | 0.36 | NE Zones 5-6 |
| **Hexachlorocyclopentadiene** | 40 | 1,100 | NE Zones 2-5 | 1,100 | NE Zones 5-6 |
| **Hexachloroethane** | 20 | 46 | NE Zones 2-5 | 46 | NE Zones 5-6 |
| **Isophorone** | 6,700 | 180,000 | NE Zones 2-5 | 180,000 | NE Zones 5-6 |

| PARAMETER | FRESHWATER OBJECTIVES (µg/l) | | 2016 | MARINE OBJECTIVES (µg/l) | 2016 |
|---|---|---|---|---|---|
| | FISH & WATER INGESTION | FISH INGESTION ONLY | | FISH INGESTION ONLY | |
| **2-Methyl-4,6-dinitrophenol** | 13 | 280 | NM | 280 | NM |
| **Nitrobenzene** | 17 | 690 | NE Zones 2-5 | 690 | NE Zones 5-6 |
| **Pentachlorobenzene** | 1.4 | 1.5 | NM | 1.5 | NM |
| **Pentachlorophenol** | * | 11,000 | NE Zones 2-5 | 11,000 | NE Zones 5-6 |
| **Phenol** | 10,000 | 860,000 | NE Zones 2-5 | 860,000 | NE Zones 5-6 |
| **1,2,4,5-Tetrachlorobenzene** | 0.97 | 1.1 | NM | 1.1 | NM |
| **1,2,4 - Trichlorobenzene** | 35 | 70 | NE Zones 2-5 | 70 | NE Zones 5-6 |
| **2,4,5-Trichlorophenol** | 1,800 | 3,600 | NM | 3,600 | NM |
| **Vinyl Chloride** | * | 10,000 | NE Zone 1B | 10,000 | NM |

* The MCL for this compound applies in Zones 2 and 3 and is listed in Table 3.

DL = Detection Limit; NA = not available; NE = No Exceedance; Nm = Not Monitored

For this assessment cycle, where DRBC has not adopted numeric toxics criteria (Zones 1A through 1E), to ensure attainment and maintenance of downstream water quality standards and to facilitate consistent and efficient implementation and coordination of water quality-related management actions in shared interstate waters, an assessment methodology based on the most stringent of basin state standards in Zones 1A though 1E is used in the assessment.

Some criteria require hardness values to compute the actual criteria numeric value. In these cases, toxics data from ambient water are compared to stream quality objectives using hardness values listed in DRBC Water Quality Regulations for Zones 2 through 5 (i.e., 74 mg/L as $CaCO_3$).

- An additional comparison is conducted as part of this assessment with site-specific paired hardness measured concurrently with toxic analytical parameters.
- For Zone 1 assessments, the actual criteria numeric value is computed with site-specific paired hardness measured concurrently with the toxic analytical parameter and the measured ambient water concentrations of copper were also compared to criteria numeric values calculated with median, minimum and maximum hardness values measured at the nearest interstate control point (ICP) or boundary control point (BCP).

For criteria expressed as the dissolved form of the metal, assessment of monitoring data is as follows:

- In assessment Zones with dissolved metals data collected, direct comparison to DRBC dissolved criteria;
- In assessment Zones with only total metals data collected (as noted in Table 5), comparison of total metals data to estimated total metals criteria using conversion factors listed in "Revised Procedure for Converting Total Recoverable Water Quality Criteria for Metals to Dissolved Criteria" http://www.state.nj.us/drbc/regs/critmetals.pdf.

[a]The DRBC methylmercury criterion is fish tissue residue based as recommended by USEPA. No exceedances were observed in the fish species monitored by the DRBC in tidal and non-tidal waters (channel catfish, white perch, smallmouth bass and white sucker). Concentrations of mercury as wet weight in fish species sampled do not exceed a residue based water quality criteria of 300 ppb methylmercury in 2012 data or in 2011 data assuming methyl mercury is approximately 80% or less of total mercury measured in the fish tissue. In order to include available data for other aquatic biota in the water quality assessment, DRBC staff is soliciting data on methyl mercury in biota sampled from the Delaware River especially large fish that have a high potential for bioaccumulation of methyl mercury.

APPENDIX D-20

SAMPLING DATA FOR DELAWARE RIVER AT BILES CREEK

APPENDIX D-20, SURFACE WATER QUALITY DATA FROM DRBC

| Analyte | Type | Date | | | | | | | Units |
|---|---|---|---|---|---|---|---|---|---|
| | | 4/21/2015 | 5/19/2015 | 6/16/2015 | 7/14/2015 | 8/18/2015 | 9/15/2015 | 10/14/2015 | |
| Total Nickel | Sample-Routine | **1.2 J** | **0.98 J** | ND | ND | ND | ND | ND | ug/l |
| Total Calcium | Sample-Routine | **13000** | **22100** | ND | **13300** | **18100** | ND | **17700** | ug/l |
| Total Magnesium | Sample-Routine | **4780** | **8810** | **6190** | **4600** | **6980** | ND | **6320** | ug/l |
| Total Copper | Sample-Routine | **2.2** | **2.2** | ND | ND | ND | ND | ND | ug/l |
| Dissolved Zinc | Sample-Routine | **3.5 J** | **3.2 J** | ND | ND | ND | ND | ND | ug/l |
| Total Zinc | Sample-Routine | **12 J** | **8.1 J** | ND | ND | ND | ND | ND | ug/l |
| Total Sodium | Sample-Routine | **18300** | **20000** | **17900** | **13400** | **17000** | ND | **18300** | ug/l |
| Dissolved Copper | Sample-Routine | **1.2 J** | **1.1 J** | ND | ND | ND | ND | **3.8 J** | ug/l |
| Dissolved Lead | Sample-Routine | **0.11 J** | ND | ND | ND | ND | ND | ND | ug/l |
| Dissolved Antimony | Sample-Routine | ND | ND | ND | ND | ND | ND | ND | ug/l |
| Total Nutrient-nitrogen | Sample-Routine | **1.26** | **2.13** | **1.24** | **1.06** | **1.47** | ND | **1.82** | mg/l |
| Dissolved Orthophosphate | Sample-Routine | **0.036** | **0.11** | **0.062** | **0.043** | **0.081** | ND | **0.079** | mg/l |
| Dissolved Phosphate-phosphorus | Sample-Routine | **0.049** | **0.117** | **0.075** | **0.046** | **0.094** | **0.006 J** | **0.084** | mg/l |
| Non-Filterable (Particle) Phosphate-phosphorus | Sample-Routine | **0.0263** | **0.0261** | **0.0172** | **0.0115** | **0.013** | **0.0095** | **0.0079** | mg/l |
| Turbidity | Sample-Routine | **15** | **2** | **5** | **3** | **2** | **4** | **2** | NTU |
| Dissolved Ammonia-nitrogen | Sample-Routine | **0.112** | **0.163** | **0.025** | **0.054** | **0.1** | **0.069** | **0.081** | mg/l |
| Dissolved Inorganic nitrogen (nitrate and nitrite) | Sample-Routine | **1.08** | **1.33** | ND | **0.603** | **1.09 J** | ND | **0.864** | mg/l |
| Temperature, air | Field Msr/Obs | **16** | **22** | **30** | **27** | **28** | **22** | **16** | deg C |
| Dissolved oxygen (DO) | Field Msr/Obs | **9.97** | **8** | **7.17** | **7.86** | **7.97** | **8.45** | **9.78** | mg/l |
| Temperature, water | Field Msr/Obs | **13.79** | **21.15** | **25.78** | **24.65** | **27.59** | **20.95** | **16.89** | deg C |
| Escherichia coli | Sample-Routine | **550** | **9** | **187** | **51** | **150** | ND | **197** | cfu/100ml |
| Enterococcus | Sample-Routine | **390** | **5** | **41** | **90** | **5** | ND | **123** | cfu/100ml |
| Fecal Coliform | Sample-Routine | ND | **47** | **220** | **90** | **30** | ND | **370** | cfu/100ml |
| Dissolved oxygen saturation | Field Msr/Obs | **96.3** | **90.1** | **88** | **94.5** | **101.2** | **94.8** | **101** | % |
| pH | Field Msr/Obs | **6.83** | **7.28** | **7.21** | **7.18** | **7.91** | **7.61** | **7.79** | None |
| Depth, Secchi disk depth | Field Msr/Obs | **1.5** | **2** | **1.3** | **1.9** | **1.9** | **2.1** | **2.3** | m |
| Specific conductance | Field Msr/Obs | **200** | **289** | **227** | **187** | **244** | **245** | **231** | uS/cm |
| Salinity | Field Msr/Obs | **0.1** | **0.14** | **0.11** | ND | **0.11** | **0.12** | **0.11** | ppt |
| Dissolved Nitrate | Sample-Routine | **1.06** | **1.31** | ND | **0.594** | **1.08** | **1.1** | **0.855** | mg/l |
| Total Lead | Sample-Routine | **0.9 J** | **0.66 J** | ND | ND | ND | ND | ND | ug/l |
| Total Antimony | Sample-Routine | ND | ND | ND | ND | ND | ND | ND | ug/l |
| Total Mercury | Sample-Routine | ND | ND | ND | ND | ND | ND | NA | ug/l |
| Total Potassium | Sample-Routine | **1670** | **2230** | **1770** | **1250** | **1520** | ND | **1790** | ug/l |
| Dissolved Nickel | Sample-Routine | ND | ND | ND | ND | ND | ND | ND | ug/l |
| Dissolved Chromium(VI) | Sample-Routine | ND | ND | ND | ND | ND | ND | ND | ug/l |
| Dissolved Nutrient-nitrogen | Sample-Routine | **1.56** | **1.9** | **1.01** | **0.901** | **1.29** | **1.47** | **1.62** | mg/l |
| Non-Filterable (Particle) Carbon | Sample-Routine | **0.757** | **0.93** | **0.663** | **0.467 J** | **0.559** | **0.131 J** | **0.308 J** | mg/l |
| Total Chloride | Sample-Routine | **31** | **37** | **37** | **24** | **30** | ND | **29** | mg/l |
| Hardness, Ca, Mg | Sample-Routine | **51.3** | **88.7** | **68.3** | **53.8** | **73.8** | **75.9** | **68.9** | mg/l CaCO3 |
| Non-Filterable (Particle) Nutrient-nitrogen | Sample-Routine | **0.0937** | **1.56** | **0.0905** | **0.0507** | **0.0816** | **0.0582** | **0.034 J** | mg/l |
| Total Phosphate-phosphorus | Sample-Routine | **0.092** | **0.148** | **0.103** | **0.06** | **0.103** | **0.12** | **0.096** | mg/l |
| Total dissolved solids | Sample-Routine | **106** | **127** | **100** | **88** | **86** | ND | **108** | mg/l |
| Total suspended solids | Sample-Routine | **11** | **3** | **4** | **3** | **14** | **4** | **3** | mg/l |
| Total Alkalinity, total | Sample-Routine | **34.2** | **57.4** | **44.2** | **35.7** | **51.2** | ND | **44.6** | mg/l |
| Dissolved Nitrite | Sample-Routine | **0.012** | **0.027** | **0.008** | **0.009** | **0.02** | ND | **0.009** | mg/l |
| Dissolved Silica | Sample-Routine | **4.1** | **3.9** | **3.6** | **4.1** | **3.8** | **5.1** | **3.7** | mg/l |
| Dissolved Sulfate | Sample-Routine | **12** | **19.3** | **14.2** | **11.8** | **16.4** | ND | **17.3** | mg/l |
| Dissolved Organic carbon | Sample-Routine | **3.2** | **2.3 J** | ND | **2.8** | **2.5** | ND | **NA** | mg/l |
| Chlorophyll a | Sample-Routine | **3.3** | **7.02** | **4.92** | **1.67** | **1.88** | **0.97** | **0.47** | mg/l |

- All samples taken at: DRBC monitoring location 31DELRBC_WQX-332068, Biles Channel, River Mile 131.04 (Lat 40.174465, Long 74.734848)

APPENDIX D-21

ACT 2 DATA FOR NEARBY PROPERTIES

Note: Information in this appendix was provided by EPA and is reproduced from the best available copy. Even printing some of the tables on larger paper did not improve the legibility of the information.

# Facility Decommissioning Report and Phase II Environmental Site Assessment
American National Can Company
1001 New Ford Mill Road
Morrisville, Pennsylvania

August 18, 1997

Prepared for

American National Can Company
8770 West Bryn Mawr Avenue
Chicago, Illinois, 60631

**TABLE 3**
**American National Can**
**Morrisville, PA**

***Front Loading Dock Area***
***Surface Soil Samples***
***(mg/Kg)***

| Sample ID: | SS-1 (0'-2') | SS-2 (0'-2') | SS-3 (0'-2') | Standards Act II Soil to Groundwater |
|---|---|---|---|---|
| **SVOCs** | | | | |
| Isophorone | **12.6** | 2.43 | 0.77 | 10 |
| Dimethyl Phthalate | ND | **6.85** | ND | 0.6 |
| Acenapthene | 1.2 | 1.1 | ND | 30 |
| Fluorene | 1.2 | 1.3 | ND | 400 |
| Phenanthrene | 24.8 | 22.9 | 5.52 | 80 |
| Anthracene | 2.74 | 2.49 | ND | 70 |
| Fluoranthene | 38.4 | 33.5 | 10.3 | 400 |
| Pyrene | 32.7 | 28.3 | 8.78 | 300 |
| Benzo (a) anthracene | **11.2** | **9.33** | 2.93 | 8 (1) |
| Chrysene | 15.1 | 12.8 | 4.67 | 500 |
| Benzo (b) fluoranthene | **13.8** | 12 | 5.57 | 8 (1) |
| Benzo (k) fluoranthene | 16.2 | 12.1 | 4.1 | 80 (1) |
| Benzo (a) pyrene | **16.9** | **13.5** | **4.98** | .8 (1) |
| Indeno (1,2,3-cd) pyrene | **10.3** | **8.06** | 3.45 | 8 (1) |
| Dibenzo (a,h) anthracene | **4.77** | **3.58** | **1.45** | .8 (1) |
| Benzo (g,h,i) perylene | 11.2 | 8.82 | 3.7 | 500 |
| **METALS** | | | | |
| Arsenic | **13.6** | **15** | **9.09** | 4 (1) |
| Barium | 84.4 | 65.6 | 75.8 | 200 |
| Cadmium | **0.779** | 0.485 | 0.39 | 0.5 |
| Chromium | **28.4** | **25.4** | **33.4** | 10 |
| Lead | 97.4 | 79.3 | 65 | 1000 (1) |
| Mercury | 0.17 | 0.13 | 0.18 | 300 (1) |
| Silver | 1.3 | 0.881 | 0.866 | -- |
| Total Petroleum Hydrocarbons | 96 | 243 | 80 | -- |
| pH (S.U.) | 7.0 | 7.0 | 7.0 | -- |

Notes:

1. "(1)" indicates Act II Non-Residential Ingestion standard
2. "ND" indicates none detected
3. Samples collected on June 6, 1997
4. "--" indicates no data
5. Boldface type indicates Act II standard exceeded

TABLE 4
American National Can
Morrisville, PA

*Eastern Fence Line and Roof Drain Outfall*
*Surface Soil Samples*
*(mg/Kg)*

| Sample ID: | SS-4 (0'-1.5') | SS-5 (0'-1.5') | SS-6 (0'-1.5') | SS-7 (0'-1.5') (NE outfall) | SS-8 (0'-1') (stressed areas) | Standards Act II Soil to Groundwater |
|---|---|---|---|---|---|---|
| **SVOCs** | | | | | | |
| Phenanthrene | ND | ND | ND | ND | 2.64 | 80 |
| Fluoranthene | 0.1 | ND | ND | ND | 5.3 | 400 |
| Pyrene | ND | ND | ND | ND | 4.81 | 300 |
| Benzo (a) anthracene | ND | ND | ND | ND | 2.05 | 8 (1) |
| Chrysene | ND | ND | ND | ND | 2.72 | 500 |
| Bezo (b) fluoranthene | ND | ND | ND | ND | 2.98 | 8 (1) |
| Benzo (k) fluoranthene | ND | ND | ND | ND | 2.55 | 80 (1) |
| Benzo (a) pyrene | ND | ND | ND | ND | **3.02** | .8 (1) |
| Indeno (1,2,3-cd) pyrene | ND | ND | ND | ND | 1.5 | 8 (1) |
| Benzo (g,h,i) perylene | ND | ND | ND | ND | 1.57 | 500 |
| **METALS** | | | | | | |
| Arsenic | **9.06** | 2.75 | **6.35** | **33** | **16.6** | 4 (1) |
| Barium | 44.2 | 26.1 | 28 | 45.5 | 114 | 200 |
| Cadmium | ND | **0.69** | ND | **4.1** | **0.7** | 0.5 |
| Chromium | **13.8** | 7.43 | 9.9 | **154** | **42.9** | 10 |
| Lead | 19 | ND | 6.5 | 47.9 | 45.2 | 1000 (1) |
| Mercury | 0.07 | 0.02 | 0.01 | 0.04 | 0.08 | 300 (1) |
| Selenium | ND | ND | ND | **10.6** | ND | 5 |
| Silver | ND | 0.92 | ND | 1.6 | 1.01 | – |

Notes:
1. "(1)" indicates Act II Non-Residential Ingestion standard
2. "ND" indicates none detected
3. Samples collected on June 6, 1997
4. "–" indicates no data
5. Boldface type indicates Act II standard exceeded

**TABLE 5**
**American National Can**
**Morrisville, PA**

***Eastern Truck Yard Soil Borings***
***Soil Samples***
***(mg/Kg)***

| Sample ID: | SB-1-1 (0'-2') | SB-2-3 (4'-6') | SB-3-5 (8'-10') | SB-4-3 (4'-6') | Standards Act II Soil to Groundwater |
|---|---|---|---|---|---|
| **VOCs** | | | | | |
| Ethylbenzene | 1.05 | ND | ND | ND | 70 |
| Toluene | 0.668 | ND | ND | ND | 100 |
| Xylenes | 6.87 | 0.006 | ND | ND | 1000 |
| **SVOCs** | | | | | |
| Naphthalene | 3.31 | ND | ND | ND | 8 |
| Fluorene | 3.68 | ND | ND | 0.488 | 400 |
| Phenanthrene | 8.64 | ND | ND | 0.926 | 80 |
| Anthracene | 0.754 | ND | ND | ND | 70 |
| Fluoranthene | 0.251 | ND | ND | ND | 400 |
| Pyrene | 1.84 | ND | ND | ND | 300 |
| Chrysene | 0.186 | ND | ND | ND | 500 |

Notes:
1. "ND" indicates none detected
2. Samples collected on June 17, 1997

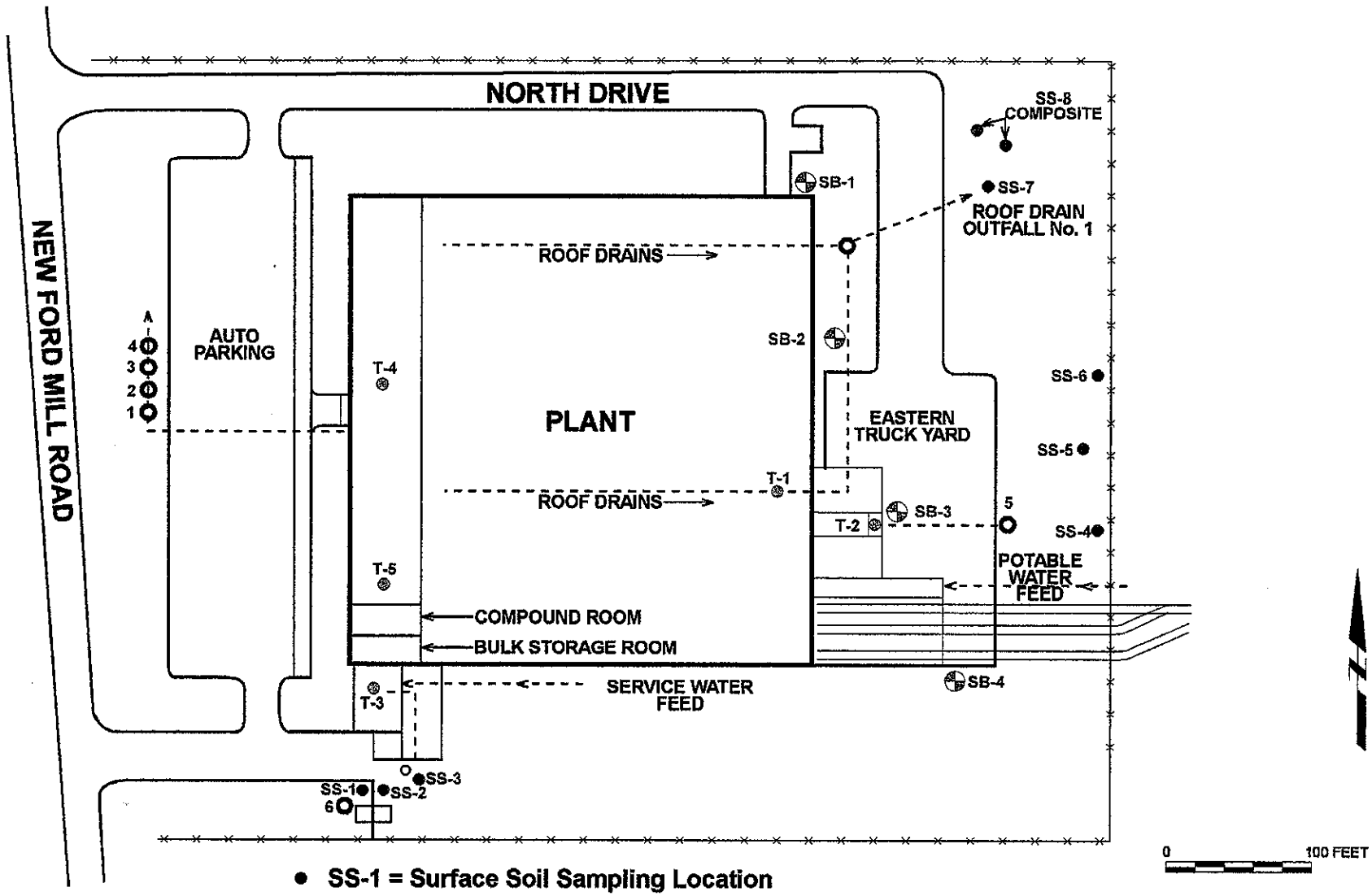


- SS-1 = Surface Soil Sampling Location
- T-1 = Tracer Dye Testing Location
- SB-1 = Soil Boring Location
- Inferred Underground Piping
- Septic/drainage Manholes
- Groundwater Well

AMERICAN NATIONAL CAN

**Site Plan Showing Sampling Locations**

Levine·Fricke·Recon
ENGINEERS, HYDROGEOLOGISTS & APPLIED SCIENTISTS

Figure 02

Project No. 6184.00

SEP 20 1989

R-585-5-9-49

# ENVIRONMENTAL PRIORITIES INITIATIVE
# PRELIMINARY ASSESSMENT OF
# NATIONAL CAN CORPORATION
# PREPARED UNDER

TDD NO. F3-8903-38
EPA NO. PA-2454
CONTRACT NO. 68-01-7346

FOR THE

HAZARDOUS SITE CONTROL DIVISION
U.S. ENVIRONMENTAL PROTECTION AGENCY

AUGUST 21, 1989

NUS CORPORATION
SUPERFUND DIVISION

SUBMITTED BY

DONNA MCKEEVER
PROJECT MANAGER

REVIEWED BY

CARL RODZEWICH
SECTION SUPERVISOR

APPROVED BY

GARTH GLENN
REGIONAL OPERATIONS
MANAGER, FIT 3

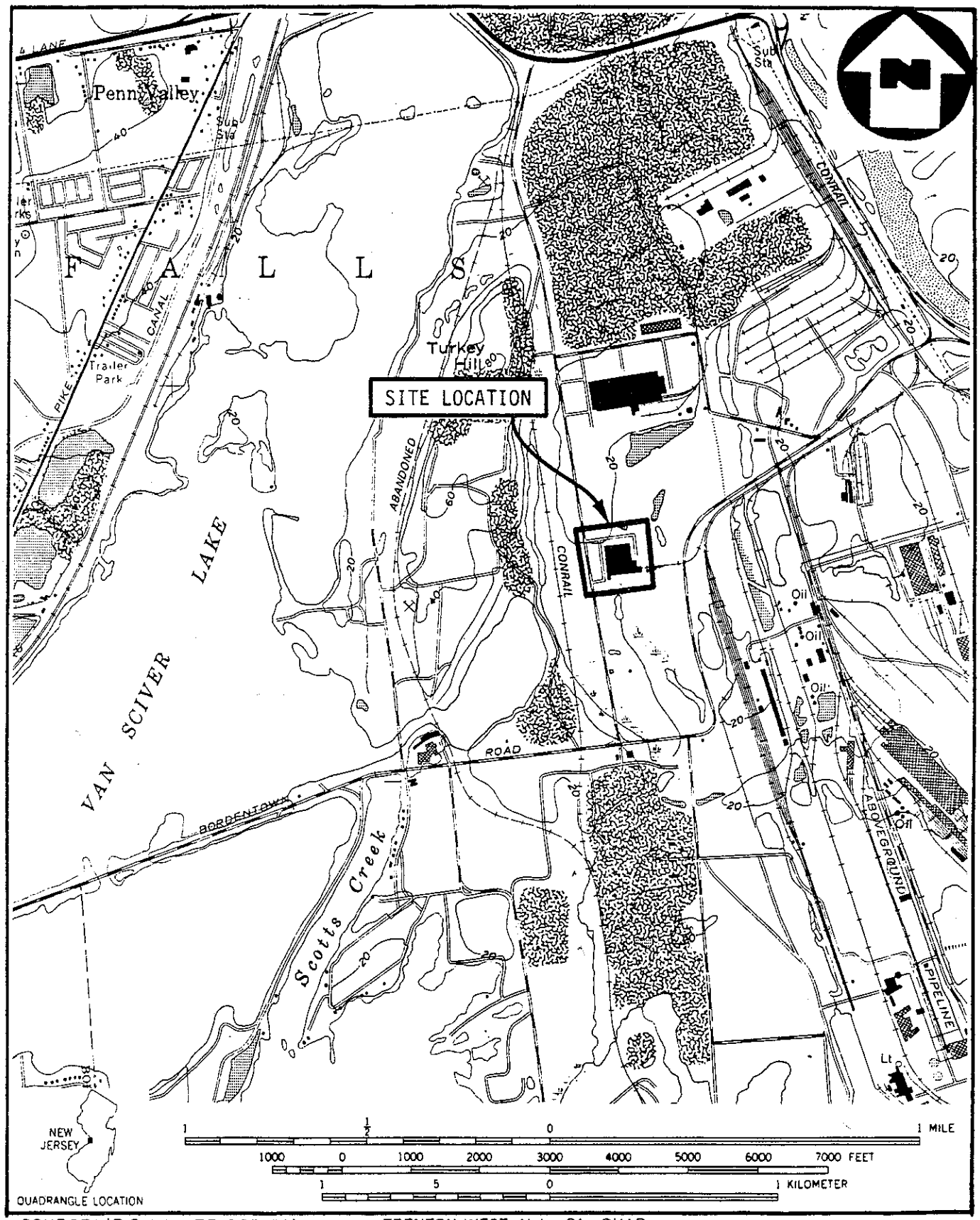


SOURCE: (7.5 MINUTE SERIES) U.S.G.S. TRENTON WEST, N.J. - PA., QUAD

SITE LOCATION MAP

NATIONAL CAN CORPORATION

SCALE 1:24000

FIGURE 2.1

NUS CORPORATION

# APPENDIX D

# EXHIBIT "B"

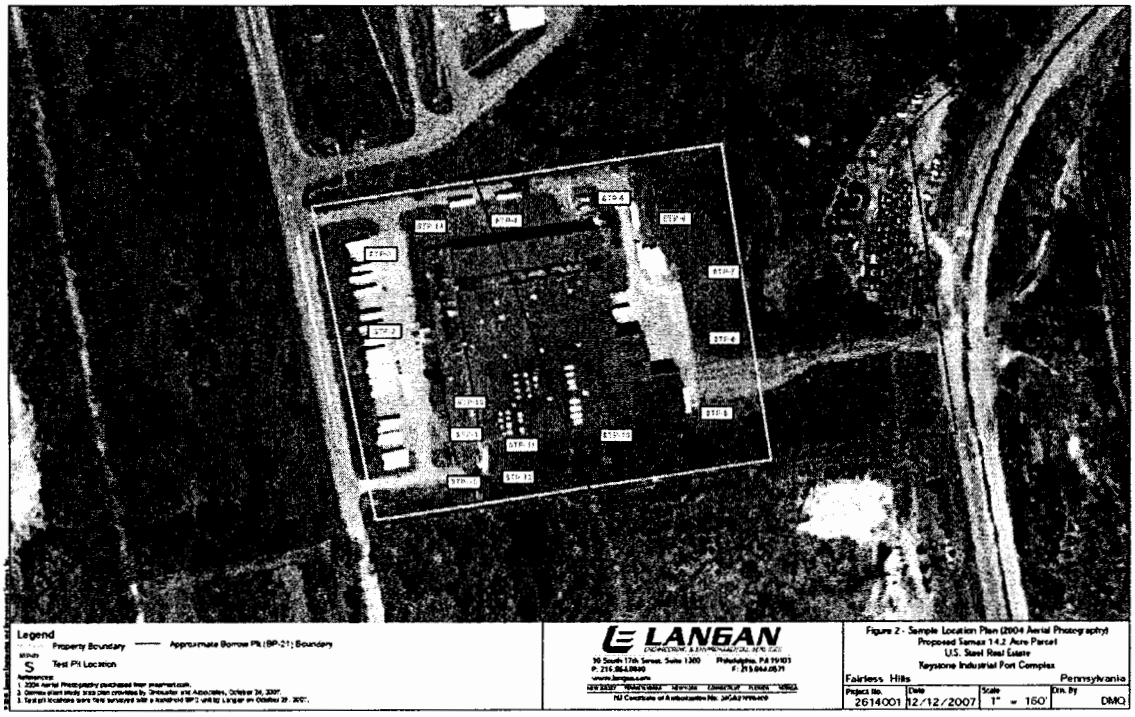


Legend

Property Boundary — Approximate Borrow Pit (BP-21) Boundary

Test Pit Location

References:
1. 2004 Aerial Photography purchased from magnet.com.
2. Demolition Study area plan provided by Schneider and Associates, October 24, 2007.
3. Test pit locations were field surveyed with a hundred (BP2) unit by Langan on October 29, 2007.

LANGAN
ENGINEERING & ENVIRONMENTAL SERVICES
30 South 17th Street, Suite 1300 Philadelphia, PA 19103
P: 215.861.0900 F: 215.861.0671
www.langan.com
NEW JERSEY NEW YORK NEW YORK CONNECTICUT FLORIDA NEVADA
NJ Certificate of Authorization No. 24GA27996400

Figure 2 - Sample Location Plan (2004 Aerial Photography)
Proposed Samax 14.2 Acre Parcel
U.S. Steel Real Estate
Keystone Industrial Port Complex

Fairless Hills Pennsylvania

| Project No. | Date | Scale | Drn. By |
|---|---|---|---|
| 2614001 | 12/12/2007 | 1" = 160' | DMQ |

**Table 1**
**Summary of Test Pit Excavation Activities**
**U. S. Steel - Proposed Samax 14.2-Acre Parcel**
**Fairless Hills, Pennsylvania**

| ID | DATE | LOCATION | TOTAL DEPTH (ft bgs) | DEPTH TO GW (ft bgs) | DEPTH OF SOIL SAMPLES COLLECTED (ft bgs) | DEPTH AND DESCRIPTION OF FILL (ft bgs) | FIELD SCREENING/OBSERVATIONS/PID READINGS | ADDITIONAL COMMENTS |
|---|---|---|---|---|---|---|---|---|
| STP-1 | 10/30/2007 | Southwestern portion of the Site in the former UST excavation | 10.50 | NE | 1.5 -2.0 & 10.0 -10.5 | Topsoil was encountered from 0.0 to 0.5 feet bgs. Fill material consisting of dark grey sub-angular gravel, some brown fine to medium sand grading into a brown silty fine sand, some rounded gravel, trace plastic, and angular road gravel to a completion depth of 10.5 feet bgs. | Topsoil was encountered from 0.0 to 0.5 feet bgs. Fill material consisting of dark grey sub-angular gravel, some brown fine to medium sand grading into a brown silty fine sand, some rounded gravel, trace plastic, and angular road gravel to a completion depth of 10.5 feet bgs No evidence of groundwater was observed. Soil samples for laboratory analysis were collected from test pit STP-1 at depths of 1.5 to 2.0 ft bgs (fill) and 10.0 to 10.5 ft bgs. Registered PID readings ranged from zero ppm to 67.8 ppm (max 67.8 ppm @ 10.5 feet bgs) | Metal strap noted at 5.0 feet bgs. Terminated test pit at 10.5 feet bgs because of refusal (concrete). |
| STP-2 | 10/30/2007 | Northwester portion of the Site adjacent to the front septic system | 13.00 | 11.00 | 1.5-2.0 & 10.5-11.0 | (0.0-3.0) Asphalt, road gravel, and slag was noted from 0.0 to 0.5 feet bgs. Brown silty fine to medium sand and rounded gravel was observed from 0.5 to 3.0 feet bgs. | Asphalt, road gravel, and slag was noted from 0.0 to 0.5 feet bgs. Fill material consisting of brown silty fine to medium sand and rounded gravel was observed from 0.5 to 3.0 feet bgs. Brown fine to medium sand, trace rounded gravel and cobbles was observed from 3.0 to a completion depth of 13.0 feet bgs. Evidence of groundwater was observed at 11.0 feet bgs. No PID readings greater than 0.0 ppm were observed. Soil samples for laboratory analysis were collected from test pit STP-2 at depths of 1.5 to 2.0 feet bgs (fill) and 10.5 to 11.0 feet bgs (soil/water interface). The test pit collapsed in the sand and cobble unit and was terminated at approximately 13.0 feet bgs. | Evidence of groundwater was observed at 11.0 feet bgs |
| STP-3 | 10/30/2007 | Northwester portion of the Site adjacent to the front septic system | 12.00 | 11.00 | 1.5-2.0 & 10.5-11.0 | (0.0-2.0) Asphalt and slag were noted from 0.0 to 0.5 feet bgs Fill material consisting of brown silty fine sand and trace rounded gravel was encountered from 0.5 to 2.0 feet bgs. | Asphalt and slag were noted from 0.0 to 0.5 feet bgs. Fill material consisting of brown silty fine sand and trace rounded gravel was encountered from 0.5 to 2.0 feet bgs Brown fine to medium sand with some rounded cobbles was observed from 2.0 to 11.0 feet bgs. Evidence of groundwater was observed at 11.0 ft bgs No PID readings greater than 0.0 ppm were observed. Soil samples for laboratory analysis were collected from test pit STP-3 at depths of 1.5 to 2.0 feet bgs (fill) and 10.5 to 11.0 feet bgs (soil/water interface). The test pit collapsed in the sand and cobble unit and was terminated at approximately 12.0 feet bgs. | Evidence of groundwater was observed at 11.0 feet bgs. |
| STP-4 | 10/30/2007 | North side of the former National Can Warehouse | 14.00 | 12.00 | 1.5-2.0 &11.5-12.0 | (0.0-5.0) Topsoil was encountered from 0.0 to 0.5 feet bgs Fill material consisting of brown silty find sand, trace slag and rounded gravel was encountered from 0.5 to 4.0 feet bgs. | Topsoil was encountered from 0.0 to 0.5 feet bgs. Fill material consisting of brown silty find sand, trace slag and rounded gravel was encountered from 0.5 to 4.0 feet bgs. Dark grey silt, trace fine sand was noted from 4.0 to 5.0 feet bgs Below the silt was a brown silty fine sand with trace rounded gravel from 5.0 to 12.0 feet bgs. Evidence of groundwater was observed at 12.0 feet bgs No PID readings greater than 0.0 ppm were observed. Soil samples for laboratory analysis were collected from test pit STP-4 at depths of 1.5 to 2.0 feet bgs (fill) and 11.5 to 12.0 feet bgs (soil/water interface). The test pit collapsed in the sand and gravel unit and was terminated at approximately 14.0 feet bgs. | Evidence of groundwater was observed at 12.0 feet bgs |
| STP-5 | 10/31/2007 | Northeast portion of the site (BP-21) | 14.00 | 11.00 | 1.5-2.0 & 10.5-11.0 | (0.0-4.0) Topsoil was encountered from 0.0 to 0.5 feet bgs. Fill material consisting of brown fine to medium sand, some rounded gravel, trace silt and slag was encountered from 0.5 to 4.0 feet bgs. | Topsoil was encountered from 0.0 to 0.5 feet bgs. Fill material consisting of brown fine to medium sand, some rounded gravel, trace silt and slag was encountered from 0.5 to 4.0 feet bgs. Beneath the fill material was brown fine to medium sand, some rounded gravel, and trace silt from 4.0 to 8.0 feet bgs Beneath the sand was a brown silty fine sand, some rounded gravel was observed from 8.0 to 10.0 feet bgs. A six-inch lens of grey silt was noted from 10.0 to 10.5 feet bgs. Below the silt lens was a brown fine to medium sand, some rounded gravel from 10.5 to 14.0 feet bgs. Evidence of groundwater was observed at 11.0 feet bgs. No PID readings greater then 0.0 ppm were observed. Soil samples for laboratory analysis were collected from test pit STP-5 at depths of 1.5 to 2.0 feet bgs (fill) and 10.5 to 11.0 feet bgs (soil/water interface). The test pit collapsed in the sand and gravel unit and was terminated at approximately 14.0 feet bgs. | Evidence of groundwater was observed at 11.0 feet bgs. |
| STP-6 | 10/31/2007 | Eastern portion of the Site (BP-21) | 10.00 | 8.00 | 1.5-2.0 &7.5-8.0 | (0.0-6.0) Topsoil was encountered from 0.0 to 0.5 feet bgs. Fill material consisting of brown fine to medium sand, some rounded gravel were observed from 0.5 to 6.0 feet bgs. | Topsoil was encountered from 0.0 to 0.5 feet bgs. Fill material consisting of brown fine to medium sand, some rounded gravel were observed from 0.5 to 6.0 feet bgs. Below the fill was dark grey silt, some clay, and trace rounded gravel from 6.0 to 8.0 feet bgs. Evidence of groundwater was observed at 8.0 feet bgs. No PID readings greater than 0.0 ppm were observed Soil samples for laboratory analysis were collected from test pit STP-6 at depths of 1.5 to 2.0 feet bgs (fill) and 7.5 to 8.0 feet bgs (soil/water interface) The test pit collapsed and was terminated at approximately 10.0 feet bgs. | Evidence of groundwater was observed at 8.0 feet bgs. |
| STP-7 | 10/31/2007 | Eastern portion of the Site (BP-21) | 6.00 | 4.00 | 1.5-2.0 3.5-4.0 | (0.0-3.0) Topsoil was encountered from 0.0 to 0.5 feet bgs. Fill material consisting of brown fine to medium sand, some rounded gravel, trace silt was observed from 0.5 to 3.0 feet bgs | Topsoil was encountered from 0.0 to 0.5 feet bgs. Fill material consisting of brown fine to medium sand, some rounded gravel, trace silt was observed from 0.5 to 3.0 feet bgs. A dark grey silt lens was noted from 3.0 to 3.5 feet bgs. Beneath the silt was brown fine to medium sand, some rounded gravel that was observed from 3.5 to 4.0 feet bgs Beneath the sand was gravel with some fine to medium sand from 4.0 to 6.0 feet bgs Evidence of groundwater was observed at 4.0 ft bgs. No PID readings greater than 0.0 ppm were observed. Soil samples for laboratory analysis were collected from test pit STP-7 at depths of 1.5 to 2.0 ft bgs (fill) and 3.5 to 4.0 ft bgs (soil/water interface). The test pit collapsed in the gravel unit and was terminated at approximately 6.0 feet bgs | Evidence of groundwater was observed at 4.0 feet bgs |
| STP-8 | 10/31/2007 | Eastern portion of the Site (BP-21) adjacent to rear septic field | 8.00 | 5.00 | 1.5-2.0 & 4.5-5.0 | (0.0-4.0) Topsoil and debris (paper, scrap metal and wood) were encountered from 0.0 to 0.5 ft bgs. Fill materials consisting of brown fine to medium sand, trace silt was observed from 0.5 to 4.0 feet bgs. | Topsoil and debris (paper, scrap metal and wood) were encountered from 0.0 to 0.5 ft bgs. Fill materials consisting of brown fine to medium sand, trace silt was observed from 0.5 to 4.0 feet bgs. A dark grey silt lens was observed from 4.0 to 4.5 feet bgs Gravel and some fine to medium sand was observed from 4.5 to 8.0 feet bgs. Evidence of groundwater was observed at 5.0 feet bgs. No PID readings greater than 0.0 ppm were observed. Soil samples for laboratory analysis were collected from test pit STP-8 at depths of 1.5 to 2.0 feet bgs (fill) and 4.5 to 5.0 feet bgs (soil/water interface). The test pit collapsed in the gravel unit and was terminated at approximately 8.0 feet bgs. | Evidence of groundwater was observed at 5.0 feet bgs |
| STP-9 | 10/31/2007 | Southeastern portion of the Site (BP-21) | 10.00 | 6.00 | 1.5-2.0 & 5.5-6.0 | (0.0-5.5) Topsoil was encountered from 0.0 to 0.5 feet bgs. Fill material consisting of brown fine to medium sand and trace silt was observed from 0.5 to 5.5 feet bgs. | Topsoil was encountered from 0.0 to 0.5 feet bgs. Fill material consisting of brown fine to medium sand and trace silt was observed from 0.5 to 5.5 feet bgs. A dark grey silt lens was observed from 5.5 to 6.0 feet bgs. Gravel with some fine to medium sand was observed from 6.0 to 10.0 feet bgs. Evidence of groundwater was observed at 6.0 ft bgs. No PID readings greater than 0.0 ppm were observed Soil samples for laboratory analysis were collected from test pit STP-9 at depths of 1.5 to 2.0 feet bgs (fill) and 5.5 to 6.0 feet bgs (soil/water interface). The test pit collapsed in the gravel unit and was terminated at approximately 10.0 feet bgs. | Evidence of groundwater was observed at 6.0 feet bgs. |
| STP-10 | 10/31/2007 | South portion of the Site (BP-21) | 14.00 | 13.00 | 1.5-2.0 12.5-13.0 | (0.0-9.0) Topsoil was encountered from 0.0 to 1.0 feet bgs. Fill material consisting of brown to black fine to medium sand, some silt, and trace rounded gravel was observed from 1.0 to 9.0 feet bgs. | Topsoil was encountered from 0.0 to 1.0 feet bgs Fill material consisting of brown to black fine to medium sand, some silt, and trace rounded gravel was observed from 1.0 to 9.0 feet bgs. Below the sand was dark grey silt, some clay, and trace fine sand from 9.0 to 13.0 feet bgs Beneath the silt, gravel and some fine to medium sand was observed from 13.0 to 14.0 feet bgs. Evidence of groundwater was observed at 13.0 ft bgs. No PID readings greater than 0.0 ppm were observed. Soil samples for laboratory analysis were collected from test pit STP-10 at depths of 1.5 to 2.0 ft bgs (fill) and 12.5 to 13.0 ft bgs (soil/water interface) The test pit collapsed in the gravel unit and was terminated at approximately 14.0 feet bgs. | Evidence of groundwater was observed at 13.0 feet bgs. |
| STP-11 | 11/1/2007 | South portion of the Site (BP-21) | 15.00 | 14.50 | 1.5-2.0 7.5-8.0 | (0.0-6.5) Topsoil was encountered from 0.0 to 1.0 feet bgs. Fill material consisting of brown fine to medium sand, some silt, and trace rounded gravel was observed from 1.0 to 6.5 feet bgs. | Topsoil was encountered from 0.0 to 1.0 feet bgs Fill material consisting of brown fine to medium sand, some silt, and trace rounded gravel was observed from 1.0 to 6.5 feet bgs. Below the fill was a grey silty clay, trace rounded gravel and fine sand from 6.5 to 10.0 feet bgs. Brown silty fine sand and some rounded gravel was noted from 10.0 to 15 feet bgs. Evidence of groundwater was observed at 14.5 ft bgs. Registered PID readings ranged from zero ppm to 37.6 ppm (max 37.6 ppm @ 8.0 feet bgs). Soil samples for laboratory analysis were collected from test pit STP-11 at depths of 1.5 to 2.0 ft bgs (fill) and 7.5 to 8.0 ft bgs (highest PID reading) The test pit collapsed in the gravel unit and was terminated at approximately 15.0 feet bgs | Evidence of groundwater was observed at 14.5 feet bgs |
| STP-12 | 11/1/2007 | Southwestern portion of the Site adjacent to the former outside drum storage area | 10.00 | 8.00 | 1.5-2.0 & 7.5-8.0 | (0.0-7.0) Topsoil was encountered from 0.0 to 1.0 feet bgs. Fill material consisting of brown fine to medium sand, some silt, and trace rounded gravel was observed from 1.0 to 7.0 feet bgs. | Topsoil was encountered from 0.0 to 1.0 feet bgs. Fill material consisting of brown fine to medium sand, some silt, and trace rounded gravel was observed from 1.0 to 7.0 feet bgs Below the fill was a stained grey fine to medium sand, some silt and rounded gravel from 7.0 to 9.5 feet bgs. Beneath the sand, was gravel with some fine to medium sand from 9.5 to 10.0 feet bgs. Evidence of groundwater was observed at 8.0 ft bgs. Registered PID readings ranged from zero ppm to 1863 ppm (max 1,863 ppm @ 7.5 feet bgs). Soil samples for laboratory analysis were collected from test pit STP-12 at depths of 1.5 to 2.0 feet bgs (fill) and 7.5 to 8.0 feet bgs (highest PID reading) The test pit collapsed in the gravel unit and was terminated at approximately 10.0 feet bgs. | Evidence of groundwater was observed at 8 feet bgs. |
| STP-13 | 11/1/2007 | Southwester portion of the Site in the former UST excavation | 10.00 | NE | 1.5 -2.0 & 10.0 -10.5 | (0.0-10.5) Fill material consisting of a dark grey sub-angular road gravel, some fine to medium sand that graded into a brown silty fine to medium sand, some rounded gravels and cobbles was observed to a completion depth of 10.5 feet bgs | Fill material consisting of a dark grey sub-angular road gravel, some fine to medium sand that graded into a brown silty fine to medium sand, some rounded gravels and cobbles was observed to a completion depth of 10.5 feet bgs. Evidence of groundwater was not observed. Registered PID readings ranged from 0.0 ppm to 1.3 ppm (max 1.3 ppm @ 2.0 feet bgs). Soil samples for laboratory analysis were collected from test pit STP-13 at depths of 1.5 to 2.0 feet bgs (fill, highest PID hit) and 9.5 to 10.0 feet bgs (bottom of test pit). The test pit was terminated at 10.0 feet bgs because of excavator refusal (concrete). | Terminated test pit at 10.0 feet bgs because of excavator refusal (concrete) |
| STP-14 | 11/1/2007 | Southwestern portion of the Site adjacent to the former outside drum storage area and the former waste solvent tank | 14.00 | 12.00 | 1.5-2.0 & 11.5-12.0 | (0.0-7.0) Topsoil was encountered from 0.0 to 0.5 feet bgs. Fill material consisting of brown silty fine sand, trace slag and rounded gravel was observed from 0.5 to 7.0 feet bgs. | Topsoil was encountered from 0.0 to 0.5 feet bgs Fill material consisting of brown silty fine sand, trace slag and rounded gravel was observed from 0.5 to 7.0 feet bgs. Below the fill was a brown fine to medium sand, some rounded gravel from 7.0 to 14.0 feet bgs. Evidence of groundwater was observed at 12.0 ft bgs. No PID readings greater than 0 ppm were observed. Soil samples for laboratory analysis were collected from test pit STP-14 at depths of 1.5 to 2.0 feet bgs (fill) and 11.5 to 12.0 feet bgs (soil/water interface). The test pit collapsed in the sand and gravel unit and was terminated at approximately 14.0 feet bgs. | Evidence of groundwater was observed at 12 feet bgs and a 1-inch diameter steel rod was noted at [illegible] bgs. |
| STP-15 | 11/1/2007 | Southwestern portion of the Site adjacent to the roof drain outfall (leaching pit) | 12.00 | 9.00 | 1.5-2.0 & 8.5-9.0) | (0.0-8.0) Topsoil was encountered from 0.0 to 1.0 feet bgs. Fill material consisting of brown fine to medium sand and rounded gravel was observed from 1.0 to 8.0 feet bgs | Topsoil was encountered from 0.0 to 1.0 feet bgs. Fill material consisting of brown fine to medium sand and rounded gravel was observed from 1.0 to 8.0 feet bgs. Brown fine sand was observed from 8.0 to 12.0 feet bgs. Evidence of groundwater was observed at 9.0 ft bgs. No PID readings greater then 0 ppm were observed. Soil samples for laboratory analysis were collected from test pit STP-15 at depths of 1.5 to 2.0 feet bgs (fill) and 8.5 to 9.0 feet bgs (soil/water interface). The test pit collapsed in the sand unit and was terminated at approximately 12.0 feet bgs. | Evidence of groundwater was observed at 9 feet bgs |

**Notes:**
bgs - Below Ground Surface
ppm - Parts Per Million
PID - Photo Ionization Detector (readings in ppm)
STP - Test Pit (Advanced by Trackhoe Excavator)

# Table 2
## Summary of Soil Analytical Results
## Comparison to Pennsylvania Non-Residential Statewide Health Direct Contact Soil MSCs
## U. S. Steel - Proposed Samax 14.2-Acre Parcel
## Fairless Hills, Pennsylvania

| | CAS No. | PADEP Non-Residential Direct Contact Non-Use Aquifer MSC | | Location ID | STP-1 | | | STP-1 | | | STP-2 | | | STP-2 | | | STP-3 | | | STP-3 | | | STP-3 | | | STP-4 | | | STP-4 | | |
|---|---|---|---|---|---|---|---|---|---|---|---|---|---|---|---|---|---|---|---|---|---|---|---|---|---|---|---|---|---|---|---|
| | | | | Sample ID | 001-STP-1_1.5-2.0 | | | 002-STP-1_10-10.5 | | | 005-STP-2_1.5-2.0 | | | 006-STP-2_10.5-11.0 | | | 008-STP-3_1.5-2.0 | | | 009-DUP-1-103007 | | | 010-STP-3_10.5-11 | | | 014-STP-4_1.5-2.0 | | | 015-STP-4_11.5-12 | | |
| | | | | Sample Date | 10/30/07 | | | 10/30/07 | | | 10/30/07 | | | 10/30/07 | | | 10/30/07 | | | 10/30/07 | | | 10/30/07 | | | 10/31/07 | | | 10/31/07 | | |
| | | | | Depth to GW | NA | | | NA | | | 11.00 | | | 11.00 | | | 11.00 | | | 11.00 | | | 11.00 | | | 11.00 | | | 11.00 | | |
| | | 0-2 ft Surface Soil | 2-15 ft Sub-Surface Soil | Start Depth (ft) | 1.50 | | | 10.00 | | | 1.50 | | | 10.50 | | | 1.50 | | | 1.50 | | | 10.50 | | | 1.50 | | | 11.50 | | |
| | | | | End Depth (ft) | 2.00 | | | 10.50 | | | 2.00 | | | 11.00 | | | 2.00 | | | 2.00 | | | 11.00 | | | 2.00 | | | 12.00 | | |
| **TCL Volatiles** | | | | Units | Result | Q | RL | Result | Q | RL | Result | Q | RL | Result | Q | RL | Result | Q | RL | Result | Q | RL | Result | Q | RL | Result | Q | RL | Result | Q | RL |
| Acetone | 67-64-1 | 10,000,000 | 10,000,000 | ug/kg | ND | | 26 | ND | | 22 | ND | | 23 | ND | | 23 | ND | | 22 | ND | | 23 | ND | | 19 | ND | | 20 | ND | | 26 |
| Benzene | 71-43-2 | 210,000 | 240,000 | ug/kg | ND | | 6.5 | ND | | 5.5 | ND | | 5.6 | ND | | 5.9 | ND | | 5.6 | ND | | 5.7 | ND | | 4.7 | ND | | 5.1 | ND | | 6.4 |
| Bromodichloromethane | 75-27-4 | 45,000 | 51,000 | ug/kg | ND | | 6.5 | ND | | 5.5 | ND | | 5.6 | ND | | 5.9 | ND | | 5.6 | ND | | 5.7 | ND | | 4.7 | ND | | 5.1 | ND | | 6.4 |
| Bromoform | 75-25-2 | 1,500,000 | 1,700,000 | ug/kg | ND | | 6.5 | ND | | 5.5 | ND | | 5.6 | ND | | 5.9 | ND | | 5.6 | ND | | 5.7 | ND | | 4.7 | ND | | 5.1 | ND | | 6.4 |
| Bromomethane | 74-83-9 | 270,000 | 300,000 | ug/kg | ND | | 6.5 | ND | | 5.5 | ND | | 5.6 | ND | | 5.9 | ND | | 5.6 | ND | | 5.7 | ND | | 4.7 | ND | | 5.1 | ND | | 6.4 |
| 2-Butanone | 78-93-3 | 10,000,000 | 10,000,000 | ug/kg | ND | | 6.5 | ND | | 5.5 | ND | | 5.6 | ND | | 5.9 | ND | | 5.6 | ND | | 5.7 | ND | | 4.7 | ND | | 5.1 | ND | | 6.4 |
| Carbon Disulfide | 75-15-0 | 10,000,000 | 10,000,000 | ug/kg | ND | | 6.5 | ND | | 5.5 | ND | | 5.6 | 4 | J | 5.9 | ND | | 5.6 | ND | | 5.7 | ND | | 4.7 | ND | | 5.1 | ND | | 6.4 |
| Carbon Tetrachloride | 56-23-5 | 110,000 | 120,000 | ug/kg | ND | | 6.5 | ND | | 5.5 | ND | | 5.6 | ND | | 5.9 | ND | | 5.6 | ND | | 5.7 | ND | | 4.7 | ND | | 5.1 | ND | | 6.4 |
| Chlorobenzene | 108-90-7 | 10,000,000 | 10,000,000 | ug/kg | ND | | 6.5 | ND | | 5.5 | ND | | 5.6 | ND | | 5.9 | ND | | 5.6 | ND | | 5.7 | ND | | 4.7 | ND | | 5.1 | ND | | 6.4 |
| Chloroethane | 75-00-3 | 10,000,000 | 10,000,000 | ug/kg | ND | | 6.5 | ND | | 5.5 | ND | | 5.6 | ND | | 5.9 | ND | | 5.6 | ND | | 5.7 | ND | | 4.7 | ND | | 5.1 | ND | | 6.4 |
| Chloroform | 67-66-3 | 17,000 | 19,000 | ug/kg | ND | | 6.5 | ND | | 5.5 | ND | | 5.6 | ND | | 5.9 | ND | | 5.6 | ND | | 5.7 | ND | | 4.7 | ND | | 5.1 | ND | | 6.4 |
| Chloromethane | 74-87-3 | 920,000 | 1,000,000 | ug/kg | ND | | 6.5 | ND | | 5.5 | ND | | 5.6 | ND | | 5.9 | ND | | 5.6 | ND | | 5.7 | ND | | 4.7 | ND | | 5.1 | ND | | 6.4 |
| Isopropylbenzene | 98-82-8 | 10,000,000 | 10,000,000 | ug/kg | ND | | 6.5 | ND | | 5.5 | ND | | 5.6 | ND | | 5.9 | ND | | 5.6 | ND | | 5.7 | ND | | 4.7 | ND | | 5.1 | ND | | 6.4 |
| Cyclohexane | 110-82-7 | 100,000 | 100,000 | ug/kg | ND | | 6.5 | ND | | 5.5 | ND | | 5.6 | ND | | 5.9 | ND | | 5.6 | ND | | 5.7 | ND | | 4.7 | ND | | 5.1 | ND | | 6.4 |
| 1,2-Dibromoethane | 106-93-4 | 930 | 8,600 | ug/kg | ND | | 6.5 | ND | | 5.5 | ND | | 5.6 | ND | | 5.9 | ND | | 5.6 | ND | | 5.7 | ND | | 4.7 | ND | | 5.1 | ND | | 6.4 |
| 1,2-Dibromo-3-chloropropane | 96-12-8 | 11,000 | 12,000 | ug/kg | ND | | 6.5 | ND | | 5.5 | ND | | 5.6 | ND | | 5.9 | ND | | 5.6 | ND | | 5.7 | ND | | 4.7 | ND | | 5.1 | ND | | 6.4 |
| Dibromochloromethane | 124-48-1 | 61,000 | 70,000 | ug/kg | ND | | 6.5 | ND | | 5.5 | ND | | 5.6 | ND | | 5.9 | ND | | 5.6 | ND | | 5.7 | ND | | 4.7 | ND | | 5.1 | ND | | 6.4 |
| 1,4-Dichlorobenzene | 106-46-7 | 3,300,000 | 190,000,000 | ug/kg | ND | | 6.5 | ND | | 5.5 | ND | | 5.6 | ND | | 5.9 | ND | | 5.6 | ND | | 5.7 | ND | | 4.7 | ND | | 5.1 | ND | | 6.4 |
| 1,2-Dichlorobenzene | 95-50-1 | 10,000,000 | 10,000,000 | ug/kg | ND | | 6.5 | ND | | 5.5 | ND | | 5.6 | ND | | 5.9 | ND | | 5.6 | ND | | 5.7 | ND | | 4.7 | ND | | 5.1 | ND | | 6.4 |
| 1,3-Dichlorobenzene | 541-73-1 | 10,000,000 | 10,000,000 | ug/kg | ND | | 6.5 | ND | | 5.5 | ND | | 5.6 | ND | | 5.9 | ND | | 5.6 | ND | | 5.7 | ND | | 4.7 | ND | | 5.1 | ND | | 6.4 |
| Dichlorodifluoromethane | 75-71-8 | 10,000,000 | 10,000,000 | ug/kg | ND | | 6.5 | ND | | 5.5 | ND | | 5.6 | ND | | 5.9 | ND | | 5.6 | ND | | 5.7 | ND | | 4.7 | ND | | 5.1 | ND | | 6.4 |
| 1,1-Dichloroethane | 75-34-3 | 1,000,000 | 1,200,000 | ug/kg | ND | | 6.5 | ND | | 5.5 | ND | | 5.6 | ND | | 5.9 | ND | | 5.6 | ND | | 5.7 | ND | | 4.7 | ND | | 5.1 | ND | | 6.4 |
| 1,2-Dichloroethane | 107-06-2 | 63,000 | 73,000 | ug/kg | ND | | 6.5 | ND | | 5.5 | ND | | 5.6 | ND | | 5.9 | ND | | 5.6 | ND | | 5.7 | ND | | 4.7 | ND | | 5.1 | ND | | 6.4 |
| trans-1,2-Dichloroethene | 156-60-5 | 3,700,000 | 4,300,000 | ug/kg | ND | | 6.5 | ND | | 5.5 | ND | | 5.6 | ND | | 5.9 | ND | | 5.6 | ND | | 5.7 | ND | | 4.7 | ND | | 5.1 | ND | | 6.4 |
| cis-1,2-Dichloroethene | 156-59-2 | 1,900,000 | 2,100,000 | ug/kg | ND | | 6.5 | ND | | 5.5 | ND | | 5.6 | ND | | 5.9 | ND | | 5.6 | ND | | 5.7 | ND | | 4.7 | ND | | 5.1 | ND | | 6.4 |
| 1,1-Dichloroethene | 75-35-4 | 33,000 | 38,000 | ug/kg | ND | | 6.5 | ND | | 5.5 | ND | | 5.6 | ND | | 5.9 | ND | | 5.6 | ND | | 5.7 | ND | | 4.7 | ND | | 5.1 | ND | | 6.4 |
| 1,2-Dichloropropane | 78-87-5 | 160,000 | 180,000 | ug/kg | ND | | 6.5 | ND | | 5.5 | ND | | 5.6 | ND | | 5.9 | ND | | 5.6 | ND | | 5.7 | ND | | 4.7 | ND | | 5.1 | ND | | 6.4 |
| trans-1,3-Dichloropropene | 10061-02-6 | 410,000 | 470,000 | ug/kg | ND | | 6.5 | ND | | 5.5 | ND | | 5.6 | ND | | 5.9 | ND | | 5.6 | ND | | 5.7 | ND | | 4.7 | ND | | 5.1 | ND | | 6.4 |
| cis-1,3-Dichloropropene | 10061-01-5 | 410,000 | 470,000 | ug/kg | ND | | 6.5 | ND | | 5.5 | ND | | 5.6 | ND | | 5.9 | ND | | 5.6 | ND | | 5.7 | ND | | 4.7 | ND | | 5.1 | ND | | 6.4 |
| Ethylbenzene | 100-41-4 | 10,000,000 | 10,000,000 | ug/kg | ND | | 6.5 | ND | | 5.5 | ND | | 5.6 | ND | | 5.9 | ND | | 5.6 | ND | | 5.7 | ND | | 4.7 | ND | | 5.1 | ND | | 6.4 |
| 2-Hexanone | 591-78-6 | 100,000 | 100,000 | ug/kg | ND | | 6.5 | ND | | 5.5 | ND | | 5.6 | ND | | 5.9 | ND | | 5.6 | ND | | 5.7 | ND | | 4.7 | ND | | 5.1 | ND | | 6.4 |
| Methyl Acetate | 79-20-9 | 10,000,000 | 10,000,000 | ug/kg | ND | | 6.5 | ND | | 5.5 | ND | | 5.6 | ND | | 5.9 | ND | | 5.6 | ND | | 5.7 | ND | | 4.7 | ND | | 5.1 | ND | | 6.4 |
| Methyl tert-Butyl Ether | 1634-04-4 | 3,200,000 | 3,700,000 | ug/kg | ND | | 6.5 | ND | | 5.5 | ND | | 5.6 | ND | | 5.9 | ND | | 5.6 | ND | | 5.7 | ND | | 4.7 | ND | | 5.1 | ND | | 6.4 |
| 4-Methyl-2-pentanone | 108-10-1 | 4,300,000 | 4,900,000 | ug/kg | ND | | 6.5 | ND | | 5.5 | ND | | 5.6 | ND | | 5.9 | ND | | 5.6 | ND | | 5.7 | ND | | 4.7 | ND | | 5.1 | ND | | 6.4 |
| Methylcyclohexane | 108-87-2 | NS | NS | ug/kg | ND | | 6.5 | ND | | 5.5 | ND | | 5.6 | ND | | 5.9 | ND | | 5.6 | ND | | 5.7 | ND | | 4.7 | ND | | 5.1 | ND | | 6.4 |
| Methylene Chloride | 75-09-2 | 3,500,000 | 4,000,000 | ug/kg | 1.8 | J B | 6.5 | 1.9 | J B | 5.5 | 2.5 | J B | 5.6 | 2.6 | J B | 5.9 | 1.7 | J | 5.6 | 1.3 | J | 5.7 | 1 | J | 4.7 | 1.6 | J | 5.1 | 2.1 | J B | 6.4 |
| Styrene | 100-42-5 | 1,000,000 | 1,000,000 | ug/kg | ND | | 6.5 | ND | | 5.5 | ND | | 5.6 | ND | | 5.9 | ND | | 5.6 | ND | | 5.7 | ND | | 4.7 | ND | | 5.1 | ND | | 6.4 |
| 1,1,2,2-Tetrachloroethane | 79-34-5 | 28,000 | 33,000 | ug/kg | ND | | 6.5 | ND | | 5.5 | ND | | 5.6 | ND | | 5.9 | ND | | 5.6 | ND | | 5.7 | ND | | 4.7 | ND | | 5.1 | ND | | 6.4 |
| Tetrachloroethene | 127-18-4 | 1,500,000 | 3,300,000 | ug/kg | ND | | 6.5 | ND | | 5.5 | ND | | 5.6 | ND | | 5.9 | ND | | 5.6 | ND | | 5.7 | ND | | 4.7 | ND | | 5.1 | ND | | 6.4 |
| Toluene | 108-88-3 | 10,000,000 | 10,000,000 | ug/kg | ND | | 6.5 | ND | | 5.5 | ND | | 5.6 | ND | | 5.9 | ND | | 5.6 | ND | | 5.7 | ND | | 4.7 | ND | | 5.1 | ND | | 6.4 |
| Xylenes (Total) | 1330-20-7 | 10,000,000 | 10,000,000 | ug/kg | ND | | 19 | ND | | 16 | ND | | 17 | ND | | 18 | ND | | 17 | ND | | 17 | ND | | 14 | ND | | 15 | ND | | 19 |
| 1,1,2-Trichloro-1,2,2-trifluoroethane | 76-13-1 | 190,000,000 | 190,000,000 | ug/kg | ND | | 6.5 | ND | | 5.5 | ND | | 5.6 | ND | | 5.9 | ND | | 5.6 | ND | | 5.7 | ND | | 4.7 | ND | | 5.1 | ND | | 6.4 |
| 1,2,4-Trichlorobenzene | 120-82-1 | 10,000,000 | 10,000,000 | ug/kg | ND | | 6.5 | ND | | 5.5 | ND | | 5.6 | ND | | 5.9 | ND | | 5.6 | ND | | 5.7 | ND | | 4.7 | ND | | 5.1 | ND | | 6.4 |
| 1,1,1-Trichloroethane | 71-55-6 | 10,000,000 | 10,000,000 | ug/kg | ND | | 6.5 | ND | | 5.5 | ND | | 5.6 | ND | | 5.9 | ND | | 5.6 | ND | | 5.7 | ND | | 4.7 | ND | | 5.1 | ND | | 6.4 |
| 1,1,2-Trichloroethane | 79-00-5 | 100,000 | 120,000 | ug/kg | ND | | 6.5 | ND | | 5.5 | ND | | 5.6 | ND | | 5.9 | ND | | 5.6 | ND | | 5.7 | ND | | 4.7 | ND | | 5.1 | ND | | 6.4 |
| Trichloroethene | 79-01-6 | 970,000 | 1,100,000 | ug/kg | ND | | 6.5 | ND | | 5.5 | ND | | 5.6 | ND | | 5.9 | ND | | 5.6 | ND | | 5.7 | ND | | 4.7 | ND | | 5.1 | ND | | 6.4 |
| Trichlorofluoromethane | 75-69-4 | 10,000,000 | 10,000,000 | ug/kg | ND | | 6.5 | ND | | 5.5 | ND | | 5.6 | ND | | 5.9 | ND | | 5.6 | ND | | 5.7 | ND | | 4.7 | ND | | 5.1 | ND | | 6.4 |
| Vinyl Chloride | 75-01-4 | 53,000 | 220,000 | ug/kg | ND | | 6.5 | ND | | 5.5 | ND | | 5.6 | ND | | 5.9 | ND | | 5.6 | ND | | 5.7 | ND | | 4.7 | ND | | 5.1 | ND | | 6.4 |

# Table 2
## Summary of Soil Analytical Results
## Comparison to Pennsylvania Non-Residential Statewide Health Direct Contact Soil MSCs
## U. S. Steel - Proposed Samax 14.2-Acre Parcel
## Fairless Hills, Pennsylvania

| | CAS No. | PADEP Non-Residential Direct Contact Non-Use Aquifer MSC | | Location ID | STP-1 | | | STP-1 | | | STP-2 | | | STP-2 | | | STP-3 | | | STP-3 | | | STP-3 | | | STP-4 | | | STP-4 | | |
|---|---|---|---|---|---|---|---|---|---|---|---|---|---|---|---|---|---|---|---|---|---|---|---|---|---|---|---|---|---|---|---|
| | | | | Sample ID | 001-STP-1_1.5-2.0 | | | 002-STP-1_10-10.5 | | | 005-STP-2_1.5-2.0 | | | 006-STP-2_10.5-11.0 | | | 008-STP-3_1.5-2.0 | | | 009-DUP-1-103007 | | | 010-STP-3_10.5-11 | | | 014-STP-4_1.5-2.0 | | | 015-STP-4_11.5-12 | | |
| | | | | Sample Date | 10/30/07 | | | 10/30/07 | | | 10/30/07 | | | 10/30/07 | | | 10/30/07 | | | 10/30/07 | | | 10/30/07 | | | 10/31/07 | | | 10/31/07 | | |
| | | | | Depth to GW | NA | | | NA | | | 11.00 | | | 11.00 | | | 11.00 | | | 11.00 | | | 11.00 | | | 11.00 | | | 11.00 | | |
| | | 0-2 ft Surface Soil | 2-15 ft Sub-Surface Soil | Start Depth (ft) | 1.50 | | | 10.00 | | | 1.50 | | | 10.50 | | | 1.50 | | | 1.50 | | | 10.50 | | | 1.50 | | | 11.50 | | |
| | | | | End Depth (ft) | 2.00 | | | 10.50 | | | 2.00 | | | 11.00 | | | 2.00 | | | 2.00 | | | 11.00 | | | 2.00 | | | 12.00 | | |
| **TCL Semivolatiles** | | | | Units | Result | Q | RL | Result | Q | RL | Result | Q | RL | Result | Q | RL | Result | Q | RL | Result | Q | RL | Result | Q | RL | Result | Q | RL | Result | Q | RL |
| Acenaphthene | 83-32-9 | 170,000,000 | 190,000,000 | ug/kg | ND | | 6.9 | 13 | | 7.9 | 35 | | 23 | ND | | 7.3 | ND | | 7.8 | ND | | 7.9 | 6.1 | J | 7.5 | ND | | 7.2 | ND | | 7.9 |
| Acenaphthylene | 208-96-8 | 170,000,000 | 190,000,000 | ug/kg | ND | | 6.9 | 3.5 | J | 7.9 | 17 | J | 23 | ND | | 7.3 | ND | | 7.8 | ND | | 7.9 | 6.5 | J | 7.5 | ND | | 7.2 | ND | | 7.9 |
| Acetophenone | 98-86-2 | 10,000,000 | 10,000,000 | ug/kg | ND | | 34 | ND | | 39 | ND | | 110 | ND | | 36 | ND | | 39 | ND | | 39 | ND | | 37 | 3.2 | J | 36 | 3 | J | 39 |
| Anthracene | 120-12-7 | 190,000,000 | 190,000,000 | ug/kg | 2.1 | J | 6.9 | 5.4 | J | 7.9 | 94 | | 23 | ND | | 7.3 | ND | | 7.8 | ND | | 7.9 | 16 | | 7.5 | ND | | 7.2 | ND | | 7.9 |
| Atrazine[a] | 1912-24-9 | 360,000 | 190,000,000 | ug/kg | ND | | 34 | ND | | 39 | ND | | 110 | ND | | 36 | ND | | 39 | ND | | 39 | ND | | 37 | ND | | 36 | ND | | 39 |
| Benzaldehyde | 100-52-7 | NS | NS | ug/kg | ND | | 34 | ND | | 39 | ND | | 110 | ND | | 36 | ND | | 39 | ND | | 39 | ND | | 37 | ND | | 36 | ND | | 39 |
| Benzo(a)anthracene | 56-55-3 | 110,000 | 190,000,000 | ug/kg | 13 | | 6.9 | 21 | | 7.9 | 410 | | 23 | ND | | 7.3 | ND | | 7.8 | ND | | 7.9 | 74 | | 7.5 | 1.8 | J | 7.2 | ND | | 7.9 |
| Benzo(a)pyrene | 50-32-8 | 11,000 | 190,000,000 | ug/kg | 15 | | 6.9 | 23 | | 7.9 | 410 | | 23 | ND | | 7.3 | 1.3 | J | 7.8 | 1.6 | J | 7.9 | 99 | | 7.5 | 2.1 | J | 7.2 | ND | | 7.9 |
| Benzo(b)fluoranthene | 205-99-2 | 110,000 | 190,000,000 | ug/kg | 23 | | 6.9 | 34 | | 7.9 | 550 | | 23 | ND | | 7.3 | 2.2 | J | 7.8 | ND | | 7.9 | 140 | | 7.5 | ND | | 7.2 | ND | | 7.9 |
| Benzo(g,h,i)perylene | 191-24-2 | 170,000,000 | 190,000,000 | ug/kg | 12 | | 6.9 | 12 | | 7.9 | 300 | | 23 | ND | | 7.3 | ND | | 7.8 | 1.4 | J | 7.9 | 86 | | 7.5 | ND | | 7.2 | ND | | 7.9 |
| Benzo(k)fluoranthene | 207-08-9 | 1,100,000 | 190,000,000 | ug/kg | 6.5 | J | 6.9 | 11 | | 7.9 | 190 | | 23 | ND | | 7.3 | ND | | 7.8 | ND | | 7.9 | 56 | | 7.5 | ND | | 7.2 | ND | | 7.9 |
| 1,1'-Biphenyl | 92-52-4 | 140,000,000 | 190,000,000 | ug/kg | 3.1 | J | 34 | ND | | 39 | ND | | 110 | ND | | 36 | ND | | 39 | ND | | 39 | ND | | 37 | ND | | 36 | ND | | 39 |
| bis(2-Chloroethoxy) methane[a] | 111-91-1 | 100,000 | 100,000 | ug/kg | ND | | 34 | ND | | 39 | ND | | 110 | ND | | 36 | ND | | 39 | ND | | 39 | ND | | 37 | ND | | 36 | ND | | 39 |
| bis(2-Chloroethyl) ether | 111-44-4 | 5,000 | 5,700 | ug/kg | ND | | 6.9 | ND | | 7.9 | ND | | 23 | ND | | 7.3 | ND | | 7.8 | ND | | 7.9 | ND | | 7.5 | ND | | 7.2 | ND | | 7.9 |
| 2,2'-oxybis(1-Chloropropane) | 108-60-1 | 160,000 | 190,000 | ug/kg | ND | | 6.9 | ND | | 7.9 | ND | | 23 | ND | | 7.3 | ND | | 7.8 | ND | | 7.9 | ND | | 7.5 | ND | | 7.2 | ND | | 7.9 |
| bis-(2-Ethylhexyl)phthalate | 117-81-7 | 5,700,000 | 10,000,000 | ug/kg | 7.6 | J | 34 | ND | | 39 | ND | | 110 | 7.7 | J | 36 | 10 | J | 39 | 13 | J | 39 | ND | | 37 | 5 | J | 36 | ND | | 39 |
| 4-Bromophenyl-phenylether[a] | 101-55-3 | 100,000 | 100,000 | ug/kg | ND | | 34 | ND | | 39 | ND | | 110 | ND | | 36 | ND | | 39 | ND | | 39 | ND | | 37 | ND | | 36 | ND | | 39 |
| Butylbenzylphthalate | 85-68-7 | 10,000,000 | 10,000,000 | ug/kg | 7.6 | J | 34 | 9 | J | 39 | ND | | 110 | ND | | 36 | ND | | 39 | ND | | 39 | ND | | 37 | 3.8 | J | 36 | 6.2 | J | 39 |
| Caprolactam | 105-60-2 | NS | NS | ug/kg | 38 | | 34 | 56 | | 39 | ND | | 110 | 37 | | 36 | 40 | | 39 | 55 | | 39 | 34 | J | 37 | 10 | J | 36 | 13 | J | 39 |
| Carbazole | 86-74-8 | 4,000,000 | 190,000,000 | ug/kg | 2.2 | J | 6.9 | 5.2 | J | 7.9 | 96 | | 23 | ND | | 7.3 | ND | | 7.8 | ND | | 7.9 | 16 | | 7.5 | ND | | 7.2 | ND | | 7.9 |
| 4-Chloro-3-methylphenol | 59-50-7 | 14,000,000 | 190,000,000 | ug/kg | ND | | 34 | ND | | 39 | ND | | 110 | ND | | 36 | ND | | 39 | ND | | 39 | ND | | 37 | ND | | 36 | ND | | 39 |
| 4-Chloroaniline | 106-47-8 | 11,000,000 | 190,000,000 | ug/kg | ND | | 34 | ND | | 39 | ND | | 110 | ND | | 36 | ND | | 39 | ND | | 39 | ND | | 37 | ND | | 36 | ND | | 39 |
| 2-Chloronapthalene | 91-58-7 | 190,000,000 | 190,000,000 | ug/kg | ND | | 6.9 | ND | | 7.9 | ND | | 23 | ND | | 7.3 | ND | | 7.8 | ND | | 7.9 | ND | | 7.5 | ND | | 7.2 | ND | | 7.9 |
| 2-Chlorophenol | 95-57-8 | 920,000 | 1,100,000 | ug/kg | ND | | 34 | ND | | 39 | ND | | 110 | ND | | 36 | ND | | 39 | ND | | 39 | ND | | 37 | ND | | 36 | ND | | 39 |
| 4-Chlorophenyl-phenylether[a] | 7005-72-3 | 100,000 | 100,000 | ug/kg | ND | | 34 | ND | | 39 | ND | | 110 | ND | | 36 | ND | | 39 | ND | | 39 | ND | | 37 | ND | | 36 | ND | | 39 |
| Chrysene | 218-01-9 | 11,000,000 | 190,000,000 | ug/kg | 18 | | 6.9 | 25 | | 7.9 | 450 | | 23 | ND | | 7.3 | ND | | 7.8 | ND | | 7.9 | 100 | | 7.5 | 2.4 | J | 7.2 | ND | | 7.9 |
| 2-Methylphenol | 95-48-7 | 10,000,000 | 10,000,000 | ug/kg | ND | | 34 | ND | | 39 | ND | | 110 | ND | | 36 | ND | | 39 | ND | | 39 | ND | | 37 | ND | | 36 | ND | | 39 |
| 4-Methylphenol [f] | 106-44-5 | 14,000,000 | 190,000,000 | ug/kg | ND | | 34 | ND | | 39 | ND | | 110 | ND | | 36 | ND | | 39 | ND | | 39 | ND | | 37 | ND | | 36 | ND | | 39 |
| Dibenzo(a,h)anthracene | 53-70-3 | 11,000 | 190,000,000 | ug/kg | ND | | 6.9 | 4 | J | 7.9 | 68 | | 23 | ND | | 7.3 | ND | | 7.8 | ND | | 7.9 | 17 | | 7.5 | ND | | 7.2 | ND | | 7.9 |
| Dibenzofuran[a] | 132-64-9 | 100,000 | 100,000 | ug/kg | 2.3 | J | 34 | 5.6 | J | 39 | 21 | J | 110 | 2 | J | 36 | ND | | 39 | 2.1 | J | 39 | 4.5 | J | 37 | ND | | 36 | ND | | 39 |
| 3,3'-Dichlorobenzidine | 91-94-1 | 180,000 | 190,000,000 | ug/kg | ND | | 34 | ND | | 39 | ND | | 110 | ND | | 36 | ND | | 39 | ND | | 39 | ND | | 37 | ND | | 36 | ND | | 39 |
| 2,4-Dichlorophenol | 120-83-2 | 8,400,000 | 190,000,000 | ug/kg | ND | | 6.9 | ND | | 7.9 | ND | | 23 | ND | | 7.3 | ND | | 7.8 | ND | | 7.9 | ND | | 7.5 | ND | | 7.2 | ND | | 7.9 |
| Diethylphthalate | 84-66-2 | 10,000,000 | 10,000,000 | ug/kg | ND | | 34 | 4.4 | J | 39 | ND | | 110 | ND | | 36 | ND | | 39 | ND | | 39 | ND | | 37 | ND | | 36 | ND | | 39 |
| 2,4-Dimethylphenol | 105-67-9 | 10,000,000 | 10,000,000 | ug/kg | ND | | 34 | ND | | 39 | ND | | 110 | ND | | 36 | ND | | 39 | ND | | 39 | ND | | 37 | ND | | 36 | ND | | 39 |
| Dimethylphthalate[a] | 131-11-3 | 100,000 | 100,000 | ug/kg | ND | | 34 | ND | | 39 | ND | | 110 | ND | | 36 | ND | | 39 | ND | | 39 | ND | | 37 | ND | | 36 | ND | | 39 |
| Di-n-butylphthalate | 84-74-2 | 10,000,000 | 10,000,000 | ug/kg | 16 | J | 34 | 19 | J | 39 | ND | | 110 | 17 | J | 36 | 17 | J | 39 | 21 | J | 39 | 16 | J | 37 | ND | | 36 | ND | | 39 |
| 4,6-Dinitro-2-methylphenol[a,f] | 534-52-1 | 100,000 | 100,000 | ug/kg | ND | | 180 | ND | | 200 | ND | | 590 | ND | | 180 | ND | | 200 | ND | | 200 | ND | | 190 | ND | | 180 | ND | | 200 |
| 2,4-Dinitrophenol | 51-28-5 | 5,600,000 | 190,000,000 | ug/kg | ND | | 180 | ND | | 200 | ND | | 590 | ND | | 180 | ND | | 200 | ND | | 200 | ND | | 190 | ND | | 180 | ND | | 200 |
| 2,4-Dinitrotoluene | 121-14-2 | 260,000 | 190,000,000 | ug/kg | ND | | 34 | ND | | 39 | ND | | 110 | ND | | 36 | ND | | 39 | ND | | 39 | ND | | 37 | ND | | 36 | ND | | 39 |
| 2,6-Dinitrotoluene | 606-20-2 | 2,800,000 | 190,000,000 | ug/kg | ND | | 34 | ND | | 39 | ND | | 110 | ND | | 36 | ND | | 39 | ND | | 39 | ND | | 37 | ND | | 36 | ND | | 39 |
| Fluoranthene | 206-44-0 | 110,000,000 | 190,000,000 | ug/kg | 37 | | 6.9 | 21 | | 7.9 | 1300 | | 23 | ND | | 7.3 | 2.7 | J | 7.8 | 3.2 | J | 7.9 | 260 | | 7.5 | 4.4 | J | 7.2 | ND | | 7.9 |
| Fluorene | 86-73-7 | 110,000,000 | 190,000,000 | ug/kg | 2.3 | J | 6.9 | 9.6 | | 7.9 | 34 | | 23 | ND | | 7.3 | ND | | 7.8 | ND | | 7.9 | 6.3 | J | 7.5 | ND | | 7.2 | ND | | 7.9 |
| Hexachlorobenzene | 118-74-1 | 50,000 | 190,000,000 | ug/kg | ND | | 6.9 | ND | | 7.9 | ND | | 23 | ND | | 7.3 | ND | | 7.8 | ND | | 7.9 | ND | | 7.5 | ND | | 7.2 | ND | | 7.9 |
| Hexachlorobutadiene | 87-68-3 | 560,000 | 10,000,000 | ug/kg | ND | | 6.9 | ND | | 7.9 | ND | | 23 | ND | | 7.3 | ND | | 7.8 | ND | | 7.9 | ND | | 7.5 | ND | | 7.2 | ND | | 7.9 |
| Hexachlorocyclopentadiene | 77-47-4 | 10,000,000 | 10,000,000 | ug/kg | ND | | 34 | ND | | 39 | ND | | 110 | ND | | 36 | ND | | 39 | ND | | 39 | ND | | 37 | ND | | 36 | ND | | 39 |
| Hexachloroethane | 67-72-1 | 2,800,000 | 190,000,000 | ug/kg | ND | | 34 | ND | | 39 | ND | | 110 | ND | | 36 | ND | | 39 | ND | | 39 | ND | | 37 | ND | | 36 | ND | | 39 |
| Indeno(1,2,3-cd)pyrene | 193-39-5 | 110,000 | 190,000,000 | ug/kg | 10 | | 6.9 | 11 | | 7.9 | 270 | | 23 | ND | | 7.3 | ND | | 7.8 | ND | | 7.9 | 77 | | 7.5 | ND | | 7.2 | ND | | 7.9 |
| Isophorone | 78-59-1 | 10,000,000 | 10,000,000 | ug/kg | ND | | 34 | ND | | 39 | ND | | 110 | ND | | 36 | ND | | 39 | ND | | 39 | ND | | 37 | ND | | 36 | ND | | 39 |
| 2-Methylnaphthalene | 91-57-6 | 10,000,000 | 10,000,000 | ug/kg | 2.3 | J | 6.9 | ND | | 7.9 | ND | | 23 | ND | | 7.3 | ND | | 7.8 | ND | | 7.9 | ND | | 7.5 | ND | | 7.2 | ND | | 7.9 |
| Naphthalene | 91-20-3 | 56,000,000 | 190,000,000 | ug/kg | 4.5 | J | 6.9 | 12 | | 7.9 | 8.1 | J | 23 | ND | | 7.3 | ND | | 7.8 | ND | | 7.9 | 3.3 | J | 7.5 | 1.9 | J | 7.2 | ND | | 7.9 |
| 2-Nitroaniline[a] | 88-74-4 | 160,000 | 190,000,000 | ug/kg | ND | | 180 | ND | | 200 | ND | | 590 | ND | | 180 | ND | | 200 | ND | | 200 | ND | | 190 | ND | | 180 | ND | | 200 |
| 3-Nitroaniline[a] | 99-09-2 | 160,000 | 190,000,000 | ug/kg | ND | | 180 | ND | | 200 | ND | | 590 | ND | | 180 | ND | | 200 | ND | | 200 | ND | | 190 | ND | | 180 | ND | | 200 |
| 4-Nitroaniline[a] | 100-01-6 | 160,000 | 190,000,000 | ug/kg | ND | | 180 | ND | | 200 | ND | | 590 | ND | | 180 | ND | | 200 | ND | | 200 | ND | | 190 | ND | | 180 | ND | | 200 |
| Nitrobenzene | 98-95-3 | 1,400,000 | 10,000,000 | ug/kg | ND | | 6.9 | ND | | 7.9 | ND | | 23 | ND | | 7.3 | ND | | 7.8 | ND | | 7.9 | ND | | 7.5 | ND | | 7.2 | ND | | 7.9 |
| 2-Nitrophenol | 88-75-5 | 22,000,000 | 190,000,000 | ug/kg | ND | | 34 | ND | | 39 | ND | | 110 | ND | | 36 | ND | | 39 | ND | | 39 | ND | | 37 | ND | | 36 | ND | | 39 |
| 4-Nitrophenol | 100-02-7 | 22,000,000 | 190,000,000 | ug/kg | ND | | 180 | ND | | 200 | ND | | 590 | ND | | 180 | ND | | 200 | ND | | 200 | ND | | 190 | ND | | 180 | ND | | 200 |
| N-Nitrosodi-n-propylamine | 621-64-7 | 11,000 | 10,000,000 | ug/kg | ND | | 6.9 | ND | | 7.9 | ND | | 23 | ND | | 7.3 | ND | | 7.8 | ND | | 7.9 | ND | | 7.5 | ND | | 7.2 | ND | | 7.9 |
| N-Nitrosodiphenylamine | 86-30-6 | 10,000,000 | 10,000,000 | ug/kg | ND | | 6.9 | ND | | 7.9 | ND | | 23 | ND | | 7.3 | ND | | 7.8 | ND | | 7.5 | ND | | 7.5 | ND | | 7.2 | ND | | 7.9 |
| Di-n-octylphthalate | 117-84-0 | 10,000,000 | 10,000,000 | ug/kg | ND | | 34 | ND | | 39 | ND | | 110 | ND | | 36 | ND | | 39 | ND | | 39 | ND | | 37 | ND | | 36 | ND | | 39 |
| Pentachlorophenol | 87-86-5 | 660,000 | 190,000,000 | ug/kg | ND | | 34 | ND | | 39 | ND | | 110 | ND | | 36 | ND | | 39 | ND | | 39 | ND | | 37 | ND | | 36 | ND | | 39 |
| Phenanthrene | 85-01-8 | 190,000,000 | 190,000,000 | ug/kg | 23 | | 6.9 | 16 | | 7.9 | 680 | | 23 | 3.2 | J | 7.3 | 3.3 | J | 7.8 | 4.5 | J | 7.9 | 110 | | 7.5 | 4.6 | J | 7.2 | 3.2 | J | 7.9 |
| Phenol | 108-95-2 | 190,000,000 | 190,000,000 | ug/kg | ND | | 6.9 | ND | | 7.9 | ND | | 23 | ND | | 7.3 | ND | | 7.8 | ND | | 7.9 | ND | | 7.5 | ND | | 7.2 | ND | | 7.9 |
| Pyrene | 129-00-0 | 84,000,000 | 190,000,000 | ug/kg | 30 | | 6.9 | 21 | | 7.9 | 870 | | 23 | ND | | 7.3 | ND | | 7.8 | 2.5 | J | 7.9 | 170 | | 7.5 | 3.9 | J | 7.2 | ND | | 7.9 |
| 2,4,5-Trichlorophenol | 95-95-4 | 190,000,000 | 190,000,000 | ug/kg | ND | | 34 | ND | | 39 | ND | | 110 | ND | | 36 | ND | | 39 | ND | | 39 | ND | | 37 | ND | | 36 | ND | | 39 |
| 2,4,6-Trichlorophenol | 88-06-2 | 840,000 | 190,000,000 | ug/kg | ND | | 34 | ND | | 39 | ND | | 110 | ND | | 36 | ND | | 39 | ND | | 39 | ND | | 37 | ND | | 36 | ND | | 39 |

# Table 2
## Summary of Soil Analytical Results
## Comparison to Pennsylvania Non-Residential Statewide Health Direct Contact Soil MSCs
## U. S. Steel - Proposed Samax 14.2-Acre Parcel
## Fairless Hills, Pennsylvania

| | CAS No. | PADEP Non-Residential Direct Contact Non-Use Aquifer MSC | | Location ID | STP-1 | | | STP-1 | | | STP-2 | | | STP-2 | | | STP-3 | | | STP-3 | | | STP-3 | | | STP-4 | | | STP-4 | | |
|---|---|---|---|---|---|---|---|---|---|---|---|---|---|---|---|---|---|---|---|---|---|---|---|---|---|---|---|---|---|---|---|
| | | | | Sample ID | 001-STP-1_1.5-2.0 | | | 002-STP-1_10-10.5 | | | 005-STP-2_1.5-2.0 | | | 006-STP-2_10.5-11.0 | | | 008-STP-3_1.5-2.0 | | | 009-DUP-1-103007 | | | 010-STP-3_10.5-11 | | | 014-STP-4_1.5-2.0 | | | 015-STP-4_11.5-12 | | |
| | | | | Sample Date | 10/30/07 | | | 10/30/07 | | | 10/30/07 | | | 10/30/07 | | | 10/30/07 | | | 10/30/07 | | | 10/30/07 | | | 10/31/07 | | | 10/31/07 | | |
| | | | | Depth to GW | NA | | | NA | | | 11.00 | | | 11.00 | | | 11.00 | | | 11.00 | | | 11.00 | | | 11.00 | | | 11.00 | | |
| | | 0-2 ft Surface Soil | 2-15 ft Sub-Surface Soil | Start Depth (ft) | 1.50 | | | 10.00 | | | 1.50 | | | 10.50 | | | 1.50 | | | 1.50 | | | 10.50 | | | 1.50 | | | 11.50 | | |
| | | | | End Depth (ft) | 2.00 | | | 10.50 | | | 2.00 | | | 11.00 | | | 2.00 | | | 2.00 | | | 11.00 | | | 2.00 | | | 12.00 | | |
| **PCB (ug/kg)** | | | | **Units** | **Result** | **Q** | **RL** | **Result** | **Q** | **RL** | **Result** | **Q** | **RL** | **Result** | **Q** | **RL** | **Result** | **Q** | **RL** | **Result** | **Q** | **RL** | **Result** | **Q** | **RL** | **Result** | **Q** | **RL** | **Result** | **Q** | **RL** |
| Aroclor 1016 | 12674-11-2 | 200,000 | 10,000,000 | ug/kg | ND | | 34 | ND | | 38 | ND | | 38 | ND | | 36 | ND | | 39 | ND | | 39 | ND | | 37 | ND | | 36 | ND | | 38 |
| Aroclor 1221 | 11104-28-2 | 160,000 | 10,000,000 | ug/kg | ND | | 34 | ND | | 38 | ND | | 38 | ND | | 36 | ND | | 39 | ND | | 39 | ND | | 37 | ND | | 36 | ND | | 38 |
| Aroclor 1232 | 11141-16-5 | 160,000 | 10,000,000 | ug/kg | ND | | 34 | ND | | 38 | ND | | 38 | ND | | 36 | ND | | 39 | ND | | 39 | ND | | 37 | ND | | 36 | ND | | 38 |
| Aroclor 1242 | 53469-21-9 | 160,000 | 10,000,000 | ug/kg | ND | | 34 | ND | | 38 | ND | | 38 | ND | | 36 | ND | | 39 | ND | | 39 | ND | | 37 | ND | | 36 | ND | | 38 |
| Aroclor 1248 | 12672-29-6 | 44,000 | 10,000,000 | ug/kg | ND | | 34 | ND | | 38 | ND | | 38 | ND | | 36 | ND | | 39 | ND | | 39 | ND | | 37 | ND | | 36 | ND | | 38 |
| Aroclor 1254 | 11097-69-1 | 44,000 | 10,000,000 | ug/kg | ND | | 34 | ND | | 38 | 41 | | 38 | ND | | 36 | ND | | 39 | ND | | 39 | ND | | 37 | ND | | 36 | ND | | 38 |
| Aroclor 1260 | 11096-82-5 | 130,000 | 190,000,000 | ug/kg | ND | | 34 | ND | | 38 | ND | | 38 | ND | | 36 | ND | | 39 | ND | | 39 | ND | | 37 | ND | | 36 | ND | | 38 |
| **PP Metals (mg/kg)** | | | | **Units** | **Result** | **Q** | **RL** | **Result** | **Q** | **RL** | **Result** | **Q** | **RL** | **Result** | **Q** | **RL** | **Result** | **Q** | **RL** | **Result** | **Q** | **RL** | **Result** | **Q** | **RL** | **Result** | **Q** | **RL** | **Result** | **Q** | **RL** |
| Antimony | 7440-36-0 | 1,100 | 190,000 | mg/kg | 0.059 | B | 0.21 | 0.04 | B | 0.23 | 0.021 | B | 0.23 | 0.0053 | B | 0.22 | ND | | 0.23 | ND | | 0.23 | 0.029 | B | 0.22 | 0.022 | B | 0.22 | 0.017 | B | 0.24 |
| Arsenic | 7440-38-2 | 53 | 190,000 | mg/kg | 8.1 | | 0.1 | 4.7 | | 0.12 | 9.8 | | 0.11 | 2.5 | | 0.11 | 4.9 | | 0.12 | 5 | | 0.12 | 2 | | 0.11 | 2 | J | 0.11 | 3.4 | J | 0.12 |
| Beryllium | 7440-41-7 | 190,000 | 190,000 | mg/kg | 1 | | 0.1 | 0.44 | | 0.12 | 0.47 | | 0.11 | 0.21 | | 0.11 | 0.39 | | 0.12 | 0.39 | | 0.12 | 0.23 | | 0.11 | 0.3 | | 0.11 | 0.29 | | 0.12 |
| Cadmium | 7440-43-9 | 210 | 190,000 | mg/kg | 0.12 | | 0.1 | 0.099 | B | 0.12 | 0.071 | B | 0.11 | 0.052 | B | 0.11 | 0.065 | B | 0.12 | 0.055 | B | 0.12 | 0.09 | B | 0.11 | 0.072 | B | 0.11 | 0.076 | B | 0.12 |
| Chromium | 7440-47-3 | 190,000 | 190,000 | mg/kg | 31.3 | J | 0.21 | 9.9 | J | 0.23 | 16.9 | J | 0.23 | 5.5 | J | 0.22 | 11.4 | J | 0.23 | 11.2 | J | 0.23 | 6.2 | J | 0.22 | 6.1 | J | 0.22 | 7.1 | J | 0.24 |
| Copper | 7440-50-8 | 100,000 | 190,000 | mg/kg | 27.2 | J | 0.21 | 12.6 | J | 0.23 | 12.5 | J | 0.23 | 6.8 | J | 0.22 | 10.8 | J | 0.23 | 11.6 | J | 0.23 | 8.1 | J | 0.22 | 9.3 | | 0.22 | 9 | | 0.24 |
| Lead | 7439-92-1 | 1,000 | 190,000 | mg/kg | 12.9 | | 0.1 | 10.4 | | 0.12 | 23.6 | | 0.11 | 3.6 | | 0.11 | 9.4 | | 0.12 | 9.6 | | 0.12 | 9.4 | | 0.11 | 10 | | 0.11 | 6.7 | | 0.12 |
| Mercury | 7439-97-6 | 840 | 190,000 | mg/kg | ND | | 0.034 | 0.031 | B | 0.039 | 0.025 | B | 0.038 | ND | | 0.036 | 0.024 | B | 0.039 | 0.03 | B | 0.039 | 0.026 | B | 0.037 | 0.013 | B | 0.036 | 0.016 | B | 0.039 |
| Nickel | 7440-02-0 | 56,000 | 190000 | mg/kg | 20.7 | | 0.1 | 12.8 | | 0.12 | 9.5 | | 0.11 | 7.1 | | 0.11 | 12.9 | | 0.12 | 12.8 | | 0.12 | 7.9 | | 0.11 | 7.6 | J | 0.11 | 11.5 | J | 0.12 |
| Selenium | 7782-49-2 | 14,000 | 190,000 | mg/kg | 0.68 | J | 0.52 | 0.56 | B J | 0.59 | 0.74 | J | 0.57 | 0.32 | B J | 0.54 | 0.5 | B J | 0.58 | 0.54 | B J | 0.59 | 0.41 | B J | 0.56 | 0.29 | B | 0.55 | 0.35 | B | 0.59 |
| Silver | 7440-22-4 | 14,000 | 190000 | mg/kg | 0.031 | B | 0.1 | ND | | 0.12 | ND | | 0.11 | ND | | 0.11 | ND | | 0.12 | ND | | 0.12 | 0.0049 | B | 0.11 | ND | | 0.11 | ND | | 0.12 |
| Thallium | 7440-28-0 | 200 | 190000 | mg/kg | 0.47 | J | 0.1 | 0.11 | B J | 0.12 | 0.1 | B J | 0.11 | 0.027 | B J | 0.11 | 0.084 | B J | 0.12 | 0.084 | B J | 0.12 | 0.027 | B J | 0.11 | 0.054 | B | 0.11 | 0.05 | B | 0.12 |
| Zinc | 7440-66-6 | 190,000 | 190,000 | mg/kg | 53.3 | J | 0.52 | 31.8 | J | 0.59 | 36.9 | J | 0.57 | 19.6 | J | 0.54 | 28.4 | J | 0.58 | 28.8 | J | 0.59 | 27 | J | 0.56 | 20.6 | J | 0.55 | 24.7 | J | 0.59 |
| **General Chemistry** | | | | **Units** | **Result** | **Q** | **RL** | **Result** | **Q** | **RL** | **Result** | **Q** | **RL** | **Result** | **Q** | **RL** | **Result** | **Q** | **RL** | **Result** | **Q** | **RL** | **Result** | **Q** | **RL** | **Result** | **Q** | **RL** | **Result** | **Q** | **RL** |
| Percent Solids | none | NS | NS | percent | 96.9 | | | 85.2 | | | 87 | | | 92.1 | | | 85.6 | | | 85.3 | | | 89.5 | | | 92.9 | | | 85.1 | | |

# Table 2
## Summary of Soil Analytical Results
## Comparison to Pennsylvania Non-Residential Statewide Health Direct Contact Soil MSCs
## U. S. Steel - Proposed Samax 14.2-Acre Parcel
## Fairless Hills, Pennsylvania

| | CAS No. | PADEP Non-Residential Direct Contact Non-Use Aquifer MSC | | Location ID | STP-5 | | | STP-5 | | | STP-6 | | | STP-6 | | | STP-7 | | | STP-7 | | | STP-8 | | | STP-8 | | |
|---|---|---|---|---|---|---|---|---|---|---|---|---|---|---|---|---|---|---|---|---|---|---|---|---|---|---|---|---|
| | | | | Sample ID | 017-STP-5_1.5-2.0 | | | 018-STP-5_10.5-11 | | | 019-STP-6_1.5-2.0 | | | 020-STP-6_7.5-8 | | | 021-STP-7_1.5-2.0 | | | 022-STP-7_3.5-4.0 | | | 023-STP-8_1.5-2.0 | | | 024-STP-8_4.5-5.0 | | |
| | | | | Sample Date | 10/31/07 | | | 10/31/07 | | | 10/31/07 | | | 10/31/07 | | | 10/31/07 | | | 10/31/07 | | | 10/31/07 | | | 10/31/07 | | |
| | | | | Depth to GW | 11.00 | | | 11.00 | | | 8.00 | | | 8.00 | | | 4.00 | | | 4.00 | | | 5.00 | | | 5.00 | | |
| | | 0-2 ft Surface Soil | 2-15 ft Sub-Surface Soil | Start Depth (ft) | 1.50 | | | 10.50 | | | 1.50 | | | 7.50 | | | 1.50 | | | 3.50 | | | 1.50 | | | 4.50 | | |
| | | | | End Depth (ft) | 2.00 | | | 11.00 | | | 2.00 | | | 8.00 | | | 2.00 | | | 4.00 | | | 2.00 | | | 5.00 | | |
| **TCL Volatiles** | | | | Units | Result | Q | RL | Result | Q | RL | Result | Q | RL | Result | Q | RL | Result | Q | RL | Result | Q | RL | Result | Q | RL | Result | Q | RL |
| Acetone | 67-64-1 | 10,000,000 | 10,000,000 | ug/kg | ND | | 21 | ND | | 20 | ND | | 24 | 9.5 | J | 22 | ND | | 21 | ND | | 23 | ND | | 24 | ND | | 33 |
| Benzene | 71-43-2 | 210,000 | 240,000 | ug/kg | ND | | 5.2 | ND | | 5.1 | ND | | 5.9 | ND | | 5.5 | ND | | 5.3 | ND | | 5.8 | ND | | 5.9 | ND | | 8.3 |
| Bromodichloromethane | 75-27-4 | 45,000 | 51,000 | ug/kg | ND | | 5.2 | ND | | 5.1 | ND | | 5.9 | ND | | 5.5 | ND | | 5.3 | ND | | 5.8 | ND | | 5.9 | ND | | 8.3 |
| Bromoform | 75-25-2 | 1,500,000 | 1,700,000 | ug/kg | ND | | 5.2 | ND | | 5.1 | ND | | 5.9 | ND | | 5.5 | ND | | 5.3 | ND | | 5.8 | ND | | 5.9 | ND | | 8.3 |
| Bromomethane | 74-83-9 | 270,000 | 300,000 | ug/kg | ND | | 5.2 | ND | | 5.1 | ND | | 5.9 | ND | | 5.5 | ND | | 5.3 | ND | | 5.8 | ND | | 5.9 | ND | | 8.3 |
| 2-Butanone | 78-93-3 | 10,000,000 | 10,000,000 | ug/kg | ND | | 5.2 | ND | | 5.1 | ND | | 5.9 | ND | | 5.5 | ND | | 5.3 | ND | | 5.8 | ND | | 5.9 | ND | | 8.3 |
| Carbon Disulfide | 75-15-0 | 10,000,000 | 10,000,000 | ug/kg | ND | | 5.2 | ND | | 5.1 | ND | | 5.9 | ND | | 5.5 | ND | | 5.3 | ND | | 5.8 | ND | | 5.9 | ND | | 8.3 |
| Carbon Tetrachloride | 56-23-5 | 110,000 | 120,000 | ug/kg | ND | | 5.2 | ND | | 5.1 | ND | | 5.9 | ND | | 5.5 | ND | | 5.3 | ND | | 5.8 | ND | | 5.9 | ND | | 8.3 |
| Chlorobenzene | 108-90-7 | 10,000,000 | 10,000,000 | ug/kg | ND | | 5.2 | ND | | 5.1 | ND | | 5.9 | ND | | 5.5 | ND | | 5.3 | ND | | 5.8 | ND | | 5.9 | ND | | 8.3 |
| Chloroethane | 75-00-3 | 10,000,000 | 10,000,000 | ug/kg | ND | | 5.2 | ND | | 5.1 | ND | | 5.9 | ND | | 5.5 | ND | | 5.3 | ND | | 5.8 | ND | | 5.9 | ND | | 8.3 |
| Chloroform | 67-66-3 | 17,000 | 19,000 | ug/kg | ND | | 5.2 | ND | | 5.1 | ND | | 5.9 | ND | | 5.5 | ND | | 5.3 | ND | | 5.8 | ND | | 5.9 | ND | | 8.3 |
| Chloromethane | 74-87-3 | 920,000 | 1,000,000 | ug/kg | ND | | 5.2 | ND | | 5.1 | ND | | 5.9 | ND | | 5.5 | ND | | 5.3 | ND | | 5.8 | ND | | 5.9 | ND | | 8.3 |
| Isopropylbenzene | 98-82-8 | 10,000,000 | 10,000,000 | ug/kg | ND | | 5.2 | ND | | 5.1 | ND | | 5.9 | ND | | 5.5 | ND | | 5.3 | ND | | 5.8 | ND | | 5.9 | ND | | 8.3 |
| Cyclohexane | 110-82-7 | 100,000 | 100,000 | ug/kg | ND | | 5.2 | ND | | 5.1 | ND | | 5.9 | ND | | 5.5 | ND | | 5.3 | ND | | 5.8 | ND | | 5.9 | ND | | 8.3 |
| 1,2-Dibromoethane | 106-93-4 | 930 | 8,600 | ug/kg | ND | | 5.2 | ND | | 5.1 | ND | | 5.9 | ND | | 5.5 | ND | | 5.3 | ND | | 5.8 | ND | | 5.9 | ND | | 8.3 |
| 1,2-Dibromo-3-chloropropane | 96-12-8 | 11,000 | 12,000 | ug/kg | ND | | 5.2 | ND | | 5.1 | ND | | 5.9 | ND | | 5.5 | ND | | 5.3 | ND | | 5.8 | ND | | 5.9 | ND | | 8.3 |
| Dibromochloromethane | 124-48-1 | 61,000 | 70,000 | ug/kg | ND | | 5.2 | ND | | 5.1 | ND | | 5.9 | ND | | 5.5 | ND | | 5.3 | ND | | 5.8 | ND | | 5.9 | ND | | 8.3 |
| 1,4-Dichlorobenzene | 106-46-7 | 3,300,000 | 190,000,000 | ug/kg | ND | | 5.2 | ND | | 5.1 | ND | | 5.9 | ND | | 5.5 | ND | | 5.3 | ND | | 5.8 | ND | | 5.9 | ND | | 8.3 |
| 1,2-Dichlorobenzene | 95-50-1 | 10,000,000 | 10,000,000 | ug/kg | ND | | 5.2 | ND | | 5.1 | ND | | 5.9 | ND | | 5.5 | ND | | 5.3 | ND | | 5.8 | ND | | 5.9 | ND | | 8.3 |
| 1,3-Dichlorobenzene | 541-73-1 | 10,000,000 | 10,000,000 | ug/kg | ND | | 5.2 | ND | | 5.1 | ND | | 5.9 | ND | | 5.5 | ND | | 5.3 | ND | | 5.8 | ND | | 5.9 | ND | | 8.3 |
| Dichlorodifluoromethane | 75-71-8 | 10,000,000 | 10,000,000 | ug/kg | ND | | 5.2 | ND | | 5.1 | ND | | 5.9 | ND | | 5.5 | ND | | 5.3 | ND | | 5.8 | ND | | 5.9 | ND | | 8.3 |
| 1,1-Dichloroethane | 75-34-3 | 1,000,000 | 1,200,000 | ug/kg | ND | | 5.2 | ND | | 5.1 | ND | | 5.9 | ND | | 5.5 | ND | | 5.3 | ND | | 5.8 | ND | | 5.9 | ND | | 8.3 |
| 1,2-Dichloroethane | 107-06-2 | 63,000 | 73,000 | ug/kg | ND | | 5.2 | ND | | 5.1 | ND | | 5.9 | ND | | 5.5 | ND | | 5.3 | ND | | 5.8 | ND | | 5.9 | ND | | 8.3 |
| trans-1,2-Dichloroethene | 156-60-5 | 3,700,000 | 4,300,000 | ug/kg | ND | | 5.2 | ND | | 5.1 | ND | | 5.9 | ND | | 5.5 | ND | | 5.3 | ND | | 5.8 | ND | | 5.9 | ND | | 8.3 |
| cis-1,2-Dichloroethene | 156-59-2 | 1,900,000 | 2,100,000 | ug/kg | ND | | 5.2 | ND | | 5.1 | ND | | 5.9 | ND | | 5.5 | ND | | 5.3 | ND | | 5.8 | ND | | 5.9 | ND | | 8.3 |
| 1,1-Dichloroethene | 75-35-4 | 33,000 | 38,000 | ug/kg | ND | | 5.2 | ND | | 5.1 | ND | | 5.9 | ND | | 5.5 | ND | | 5.3 | ND | | 5.8 | ND | | 5.9 | ND | | 8.3 |
| 1,2-Dichloropropane | 78-87-5 | 160,000 | 180,000 | ug/kg | ND | | 5.2 | ND | | 5.1 | ND | | 5.9 | ND | | 5.5 | ND | | 5.3 | ND | | 5.8 | ND | | 5.9 | ND | | 8.3 |
| trans-1,3-Dichloropropene[1] | 10061-02-6 | 410,000 | 470,000 | ug/kg | ND | | 5.2 | ND | | 5.1 | ND | | 5.9 | ND | | 5.5 | ND | | 5.3 | ND | | 5.8 | ND | | 5.9 | ND | | 8.3 |
| cis-1,3-Dichloropropene[1] | 10061-01-5 | 410,000 | 470,000 | ug/kg | ND | | 5.2 | ND | | 5.1 | ND | | 5.9 | ND | | 5.5 | ND | | 5.3 | ND | | 5.8 | ND | | 5.9 | ND | | 8.3 |
| Ethylbenzene | 100-41-4 | 10,000,000 | 10,000,000 | ug/kg | ND | | 5.2 | ND | | 5.1 | ND | | 5.9 | ND | | 5.5 | ND | | 5.3 | ND | | 5.8 | ND | | 5.9 | ND | | 8.3 |
| 2-Hexanone | 591-78-6 | 100,000 | 100,000 | ug/kg | ND | | 5.2 | ND | | 5.1 | ND | | 5.9 | ND | | 5.5 | ND | | 5.3 | ND | | 5.8 | ND | | 5.9 | ND | | 8.3 |
| Methyl Acetate | 79-20-9 | 10,000,000 | 10,000,000 | ug/kg | ND | | 5.2 | ND | | 5.1 | ND | | 5.9 | ND | | 5.5 | ND | | 5.3 | ND | | 5.8 | ND | | 5.9 | ND | | 8.3 |
| Methyl tert-Butyl Ether | 1634-04-4 | 3,200,000 | 3,700,000 | ug/kg | ND | | 5.2 | ND | | 5.1 | ND | | 5.9 | ND | | 5.5 | ND | | 5.3 | ND | | 5.8 | ND | | 5.9 | ND | | 8.3 |
| 4-Methyl-2-pentanone | 108-10-1 | 4,300,000 | 4,900,000 | ug/kg | ND | | 5.2 | ND | | 5.1 | ND | | 5.9 | ND | | 5.5 | ND | | 5.3 | ND | | 5.8 | ND | | 5.9 | ND | | 8.3 |
| Methylcyclohexane | 108-87-2 | NS | NS | ug/kg | ND | | 5.2 | ND | | 5.1 | ND | | 5.9 | ND | | 5.5 | ND | | 5.3 | ND | | 5.8 | ND | | 5.9 | ND | | 8.3 |
| Methylene Chloride | 75-09-2 | 3,500,000 | 4,000,000 | ug/kg | 2.3 | J B | 5.2 | 1 | J | 5.1 | 1.9 | J | 5.9 | 2.2 | J | 5.5 | 1.4 | J | 5.3 | 1.9 | J | 5.8 | 3.1 | J | 5.9 | 4 | J B | 8.3 |
| Styrene | 100-42-5 | 1,000,000 | 1,000,000 | ug/kg | ND | | 5.2 | ND | | 5.1 | ND | | 5.9 | ND | | 5.5 | ND | | 5.3 | ND | | 5.8 | ND | | 5.9 | ND | | 8.3 |
| 1,1,2,2-Tetrachloroethane | 79-34-5 | 28,000 | 33,000 | ug/kg | ND | | 5.2 | ND | | 5.1 | ND | | 5.9 | ND | | 5.5 | ND | | 5.3 | ND | | 5.8 | ND | | 5.9 | ND | | 8.3 |
| Tetrachloroethene | 127-18-4 | 1,500,000 | 3,300,000 | ug/kg | ND | | 5.2 | ND | | 5.1 | ND | | 5.9 | ND | | 5.5 | ND | | 5.3 | ND | | 5.8 | ND | | 5.9 | ND | | 8.3 |
| Toluene | 108-88-3 | 10,000,000 | 10,000,000 | ug/kg | ND | | 5.2 | ND | | 5.1 | ND | | 5.9 | ND | | 5.5 | ND | | 5.3 | ND | | 5.8 | ND | | 5.9 | ND | | 8.3 |
| Xylenes (Total) | 1330-20-7 | 10,000,000 | 10,000,000 | ug/kg | ND | | 16 | ND | | 15 | ND | | 18 | ND | | 16 | ND | | 16 | ND | | 17 | ND | | 18 | ND | | 25 |
| 1,1,2-Trichloro-1,2,2-trifluoroethane | 76-13-1 | 190,000,000 | 190,000,000 | ug/kg | ND | | 5.2 | ND | | 5.1 | ND | | 5.9 | ND | | 5.5 | ND | | 5.3 | ND | | 5.8 | ND | | 5.9 | ND | | 8.3 |
| 1,2,4-Trichlorobenzene | 120-82-1 | 10,000,000 | 10,000,000 | ug/kg | ND | | 5.2 | ND | | 5.1 | ND | | 5.9 | ND | | 5.5 | ND | | 5.3 | ND | | 5.8 | ND | | 5.9 | ND | | 8.3 |
| 1,1,1-Trichloroethane | 71-55-6 | 10,000,000 | 10,000,000 | ug/kg | ND | | 5.2 | ND | | 5.1 | ND | | 5.9 | ND | | 5.5 | ND | | 5.3 | ND | | 5.8 | ND | | 5.9 | ND | | 8.3 |
| 1,1,2-Trichloroethane | 79-00-5 | 100,000 | 120,000 | ug/kg | ND | | 5.2 | ND | | 5.1 | ND | | 5.9 | ND | | 5.5 | ND | | 5.3 | ND | | 5.8 | ND | | 5.9 | ND | | 8.3 |
| Trichloroethene | 79-01-6 | 970,000 | 1,100,000 | ug/kg | ND | | 5.2 | ND | | 5.1 | ND | | 5.9 | ND | | 5.5 | ND | | 5.3 | ND | | 5.8 | ND | | 5.9 | ND | | 8.3 |
| Trichlorofluoromethane | 75-69-4 | 10,000,000 | 10,000,000 | ug/kg | ND | | 5.2 | ND | | 5.1 | ND | | 5.9 | ND | | 5.5 | ND | | 5.3 | ND | | 5.8 | ND | | 5.9 | ND | | 8.3 |
| Vinyl Chloride | 75-01-4 | 53,000 | 220,000 | ug/kg | ND | | 5.2 | ND | | 5.1 | ND | | 5.9 | ND | | 5.5 | ND | | 5.3 | ND | | 5.8 | ND | | 5.9 | ND | | 8.3 |

# Table 2
## Summary of Soil Analytical Results
## Comparison to Pennsylvania Non-Residential Statewide Health Direct Contact Soil MSCs
## U. S. Steel - Proposed Samax 14.2-Acre Parcel
## Fairless Hills, Pennsylvania

| | CAS No. | PADEP Non-Residential Direct Contact Non-Use Aquifer MSC | | Location ID | STP-5 | | | STP-5 | | | STP-6 | | | STP-6 | | | STP-7 | | | STP-7 | | | STP-8 | | | STP-8 | | |
|---|---|---|---|---|---|---|---|---|---|---|---|---|---|---|---|---|---|---|---|---|---|---|---|---|---|---|---|---|
| | | | | Sample ID | 017-STP-5_1.5-2.0 | | | 018-STP-5_10.5-11 | | | 019-STP-6_1.5-2.0 | | | 020-STP-6_7.5-8 | | | 021-STP-7_1.5-2.0 | | | 022-STP-7_3.5-4.0 | | | 023-STP-8_1.5-2.0 | | | 024-STP-8_4.5-5.0 | | |
| | | | | Sample Date | 10/31/07 | | | 10/31/07 | | | 10/31/07 | | | 10/31/07 | | | 10/31/07 | | | 10/31/07 | | | 10/31/07 | | | 10/31/07 | | |
| | | | | Depth to GW | 11.00 | | | 11.00 | | | 8.00 | | | 8.00 | | | 4.00 | | | 4.00 | | | 5.00 | | | 5.00 | | |
| | | 0-2 ft | 2-15 ft | Start Depth (ft) | 1.50 | | | 10.50 | | | 1.50 | | | 7.50 | | | 1.50 | | | 3.50 | | | 1.50 | | | 4.50 | | |
| | | Surface Soil | Sub-Surface Soil | End Depth (ft) | 2.00 | | | 11.00 | | | 2.00 | | | 8.00 | | | 2.00 | | | 4.00 | | | 2.00 | | | 5.00 | | |
| **TCL Semivolatiles** | | | | Units | Result | Q | RL | Result | Q | RL | Result | Q | RL | Result | Q | RL | Result | Q | RL | Result | Q | RL | Result | Q | RL | Result | Q | RL |
| Acenaphthene | 83-32-9 | 170,000,000 | 190,000,000 | ug/kg | ND | | 7.2 | ND | | 7.7 | ND | | 7.1 | 3.6 | J | 8 | ND | | 7.2 | ND | | 7.4 | ND | | 7.1 | 5.1 | J | 10 |
| Acenaphthylene | 208-96-8 | 170,000,000 | 190,000,000 | ug/kg | 4.2 | J | 7.2 | ND | | 7.7 | ND | | 7.1 | 20 | | 8 | ND | | 7.2 | ND | | 7.4 | 2 | J | 7.1 | 26 | | 10 |
| Acetaphenone | 98-86-2 | 10,000,000 | 10,000,000 | ug/kg | 3 | J | 35 | 2.7 | J | 38 | ND | | 35 | 2.8 | J | 39 | ND | | 35 | ND | | 37 | ND | | 35 | ND | | 51 |
| Anthracene | 120-12-7 | 190,000,000 | 190,000,000 | ug/kg | 3.8 | J | 7.2 | ND | | 7.7 | ND | | 7.1 | 17 | | 8 | ND | | 7.2 | ND | | 7.4 | 3.6 | J | 7.1 | 29 | | 10 |
| Atrazine[2] | 1912-24-9 | 360,000 | 190,000,000 | ug/kg | ND | | 35 | ND | | 38 | ND | | 35 | ND | | 39 | ND | | 35 | ND | | 37 | ND | | 35 | ND | | 51 |
| Benzaldehyde | 100-52-7 | NS | NS | ug/kg | ND | | 35 | ND | | 38 | ND | | 35 | ND | | 39 | ND | | 35 | ND | | 37 | ND | | 35 | ND | | 51 |
| Benzo(a)anthracene | 56-55-3 | 110,000 | 190,000,000 | ug/kg | 15 | | 7.2 | ND | | 7.7 | ND | | 7.1 | 44 | | 8 | 1.5 | J | 7.2 | 3.1 | J | 7.4 | 19 | | 7.1 | 63 | | 10 |
| Benzo(a)pyrene | 50-32-8 | 11,000 | 190,000,000 | ug/kg | 16 | | 7.2 | ND | | 7.7 | ND | | 7.1 | 51 | | 8 | 1.6 | J | 7.2 | 3.2 | J | 7.4 | 21 | | 7.1 | 60 | | 10 |
| Benzo(b)fluoranthene | 205-99-2 | 110,000 | 190,000,000 | ug/kg | 21 | | 7.2 | ND | | 7.7 | ND | | 7.1 | 58 | | 8 | ND | | 7.2 | 4.3 | J | 7.4 | 30 | | 7.1 | 76 | | 10 |
| Benzo(g,h,i)perylene | 191-24-2 | 170,000,000 | 190,000,000 | ug/kg | 12 | | 7.2 | ND | | 7.7 | ND | | 7.1 | 42 | | 8 | ND | | 7.2 | 2 | J | 7.4 | 18 | | 7.1 | 45 | | 10 |
| Benzo(k)fluoranthene | 207-08-9 | 1,100,000 | 190,000,000 | ug/kg | 7.3 | | 7.2 | ND | | 7.7 | ND | | 7.1 | 20 | | 8 | ND | | 7.2 | 1.2 | J | 7.4 | 12 | | 7.1 | 31 | | 10 |
| 1,1'-Biphenyl | 92-52-4 | 140,000,000 | 190,000,000 | ug/kg | ND | | 35 | ND | | 38 | ND | | 35 | ND | | 39 | ND | | 35 | ND | | 37 | ND | | 35 | 4.9 | J | 51 |
| bis(2-Chloroethoxy) methane[2] | 111-91-1 | 100,000 | 100,000 | ug/kg | ND | | 35 | ND | | 38 | ND | | 35 | ND | | 39 | ND | | 35 | ND | | 37 | ND | | 35 | ND | | 51 |
| bis(2-Chloroethyl) ether | 111-44-4 | 5,000 | 5,700 | ug/kg | ND | | 7.2 | ND | | 7.7 | ND | | 7.1 | ND | | 8 | ND | | 7.2 | ND | | 7.4 | ND | | 7.1 | ND | | 10 |
| 2,2'-oxybis(1-Chloropropane) | 108-60-1 | 160,000 | 190,000 | ug/kg | ND | | 7.2 | ND | | 7.7 | ND | | 7.1 | ND | | 8 | ND | | 7.2 | ND | | 7.4 | ND | | 7.1 | ND | | 10 |
| bis-(2-Ethylhexyl)phthalate | 117-81-7 | 5,700,000 | 10,000,000 | ug/kg | 7.1 | J | 35 | 5.6 | J | 38 | 4.2 | J | 35 | 5.6 | J | 39 | 5 | J | 35 | 5.3 | J | 37 | 5.4 | J | 35 | ND | | 51 |
| 4-Bromophenyl-phenylether[2] | 101-55-3 | 100,000 | 100,000 | ug/kg | ND | | 35 | ND | | 38 | ND | | 35 | ND | | 39 | ND | | 35 | ND | | 37 | ND | | 35 | ND | | 51 |
| Butylbenzylphthalate | 85-68-7 | 10,000,000 | 10,000,000 | ug/kg | 5.9 | J | 35 | 5.5 | J | 38 | 4.3 | J | 35 | 3.8 | J | 39 | 3.5 | J | 35 | 3.7 | J | 37 | 3.2 | J | 35 | ND | | 51 |
| Caprolactam | 105-60-2 | NS | NS | ug/kg | 9.5 | J | 35 | 13 | J | 38 | 9.5 | J | 35 | 10 | J | 39 | 7.3 | J | 35 | ND | | 37 | ND | | 35 | ND | | 51 |
| Carbazole | 86-74-8 | 4,000,000 | 190,000,000 | ug/kg | ND | | 7.2 | ND | | 7.7 | ND | | 7.1 | 4.3 | J | 8 | ND | | 7.2 | ND | | 7.4 | 2.9 | J | 7.1 | 7.5 | J | 10 |
| 4-Chloro-3-methylphenol | 59-50-7 | 14,000,000 | 190,000,000 | ug/kg | ND | | 35 | ND | | 38 | ND | | 35 | ND | | 39 | ND | | 35 | ND | | 37 | ND | | 35 | ND | | 51 |
| 4-Chloroaniline | 106-47-8 | 11,000,000 | 190,000,000 | ug/kg | ND | | 35 | ND | | 38 | ND | | 35 | ND | | 39 | ND | | 35 | ND | | 37 | ND | | 35 | ND | | 51 |
| 2-Chloronapthalene | 91-58-7 | 190,000,000 | 190,000,000 | ug/kg | ND | | 7.2 | ND | | 7.7 | ND | | 7.1 | ND | | 8 | ND | | 7.2 | ND | | 7.4 | ND | | 7.1 | ND | | 10 |
| 2-Chlorophenol | 95-57-8 | 920,000 | 1,100,000 | ug/kg | ND | | 35 | ND | | 38 | ND | | 35 | ND | | 39 | ND | | 35 | ND | | 37 | ND | | 35 | ND | | 51 |
| 4-Chlorophenyl-phenylether[2] | 7005-72-3 | 100,000 | 100,000 | ug/kg | ND | | 35 | ND | | 38 | ND | | 35 | ND | | 39 | ND | | 35 | ND | | 37 | ND | | 35 | ND | | 51 |
| Chrysene | 218-01-9 | 11,000,000 | 190,000,000 | ug/kg | 19 | | 7.2 | ND | | 7.7 | ND | | 7.1 | 64 | | 8 | 1.6 | J | 7.2 | 3.1 | J | 7.4 | 23 | | 7.1 | 77 | | 10 |
| 2-Methylphenol | 95-48-7 | 10,000,000 | 10,000,000 | ug/kg | ND | | 35 | ND | | 38 | ND | | 35 | ND | | 39 | ND | | 35 | ND | | 37 | ND | | 35 | ND | | 51 |
| 4-Methylphenol | 106-44-5 | 14,000,000 | 190,000,000 | ug/kg | ND | | 35 | ND | | 38 | ND | | 35 | ND | | 39 | ND | | 35 | ND | | 37 | ND | | 35 | ND | | 51 |
| Dibenzo(a,h)anthracene | 53-70-3 | 11,000 | 190,000,000 | ug/kg | ND | | 7.2 | ND | | 7.7 | ND | | 7.1 | 8.9 | | 8 | ND | | 7.2 | ND | | 7.4 | 3.6 | J | 7.1 | 13 | | 10 |
| Dibenzofuran[2] | 132-64-9 | 100,000 | 100,000 | ug/kg | ND | | 35 | ND | | 38 | ND | | 35 | 2.3 | J | 39 | ND | | 35 | ND | | 37 | ND | | 35 | 8.2 | J | 51 |
| 3,3'-Dichlorobenzidine | 91-94-1 | 180,000 | 190,000,000 | ug/kg | ND | | 35 | ND | | 38 | ND | | 35 | ND | | 39 | ND | | 35 | ND | | 37 | ND | | 35 | ND | | 51 |
| 2,4-Dichlorophenol | 120-83-2 | 8,400,000 | 190,000,000 | ug/kg | ND | | 7.2 | ND | | 7.7 | ND | | 7.1 | ND | | 8 | ND | | 7.2 | ND | | 7.4 | ND | | 7.1 | ND | | 10 |
| Diethylphthalate | 84-66-2 | 10,000,000 | 10,000,000 | ug/kg | ND | | 35 | ND | | 38 | ND | | 35 | ND | | 39 | ND | | 35 | ND | | 37 | ND | | 35 | ND | | 51 |
| 2,4-Dimethylphenol | 105-67-9 | 10,000,000 | 10,000,000 | ug/kg | ND | | 35 | ND | | 38 | ND | | 35 | ND | | 39 | ND | | 35 | ND | | 37 | ND | | 35 | ND | | 51 |
| Dimethylphthalate[2] | 131-11-3 | 100,000 | 100,000 | ug/kg | ND | | 35 | ND | | 38 | ND | | 35 | ND | | 39 | ND | | 35 | ND | | 37 | ND | | 35 | ND | | 51 |
| Di-n-butylphthalate | 84-74-2 | 10,000,000 | 10,000,000 | ug/kg | ND | | 35 | ND | | 38 | ND | | 35 | ND | | 39 | ND | | 35 | ND | | 37 | ND | | 35 | ND | | 51 |
| 4,6-Dinitro-2-methylphenol[2,3] | 534-52-1 | 100,000 | 100,000 | ug/kg | ND | | 180 | ND | | 200 | ND | | 180 | ND | | 200 | ND | | 180 | ND | | 190 | ND | | 180 | ND | | 260 |
| 2,4-Dinitrophenol | 51-28-5 | 5,600,000 | 190,000,000 | ug/kg | ND | | 180 | ND | | 200 | ND | | 180 | ND | | 200 | ND | | 180 | ND | | 190 | ND | | 180 | ND | | 260 |
| 2,4-Dinitrotoluene | 121-14-2 | 260,000 | 190,000,000 | ug/kg | ND | | 35 | ND | | 38 | ND | | 35 | ND | | 39 | ND | | 35 | ND | | 37 | ND | | 35 | ND | | 51 |
| 2,6-Dinitrotoluene | 606-20-2 | 2,800,000 | 190,000,000 | ug/kg | ND | | 35 | ND | | 38 | ND | | 35 | ND | | 39 | ND | | 35 | ND | | 37 | ND | | 35 | ND | | 51 |
| Fluoranthene | 206-44-0 | 110,000,000 | 190,000,000 | ug/kg | 26 | | 7.2 | ND | | 7.7 | ND | | 7.1 | 98 | | 8 | 2.8 | J | 7.2 | 5.3 | J | 7.4 | 44 | | 7.1 | 120 | | 10 |
| Fluorene | 86-73-7 | 110,000,000 | 190,000,000 | ug/kg | ND | | 7.2 | ND | | 7.7 | ND | | 7.1 | 6.9 | J | 8 | ND | | 7.2 | ND | | 7.4 | ND | | 7.1 | 12 | | 10 |
| Hexachlorobenzene | 118-74-1 | 50,000 | 190,000,000 | ug/kg | ND | | 7.2 | ND | | 7.7 | ND | | 7.1 | ND | | 8 | ND | | 7.2 | ND | | 7.4 | ND | | 7.1 | ND | | 10 |
| Hexachlorobutadiene | 87-68-3 | 560,000 | 10,000,000 | ug/kg | ND | | 7.2 | ND | | 7.7 | ND | | 7.1 | ND | | 8 | ND | | 7.2 | ND | | 7.4 | ND | | 7.1 | ND | | 10 |
| Hexachlorocyclopentadiene | 77-47-4 | 10,000,000 | 10,000,000 | ug/kg | ND | | 35 | ND | | 38 | ND | | 35 | ND | | 39 | ND | | 35 | ND | | 37 | ND | | 35 | ND | | 51 |
| Hexachloroethane | 67-72-1 | 2,800,000 | 190,000,000 | ug/kg | ND | | 35 | ND | | 38 | ND | | 35 | ND | | 39 | ND | | 35 | ND | | 37 | ND | | 35 | ND | | 51 |
| Indeno(1,2,3-cd)pyrene | 193-39-5 | 110,000 | 190,000,000 | ug/kg | 10 | | 7.2 | ND | | 7.7 | ND | | 7.1 | 34 | | 8 | ND | | 7.2 | ND | | 7.4 | 15 | | 7.1 | 41 | | 10 |
| Isophorone | 78-59-1 | 10,000,000 | 10,000,000 | ug/kg | ND | | 35 | ND | | 38 | ND | | 35 | ND | | 39 | ND | | 35 | ND | | 37 | ND | | 35 | ND | | 51 |
| 2-Methylnaphthalene | 91-57-6 | 10,000,000 | 10,000,000 | ug/kg | ND | | 7.2 | ND | | 7.7 | ND | | 7.1 | 3.4 | J | 8 | ND | | 7.2 | ND | | 7.4 | ND | | 7.1 | 16 | | 10 |
| Naphthalene | 91-20-3 | 56,000,000 | 190,000,000 | ug/kg | 2.3 | J | 7.2 | ND | | 7.7 | ND | | 7.1 | 3.9 | J | 8 | 1.7 | J | 7.2 | 1.9 | J | 7.4 | ND | | 7.1 | 30 | | 10 |
| 2-Nitroaniline[2] | 88-74-4 | 160,000 | 190,000,000 | ug/kg | ND | | 180 | ND | | 200 | ND | | 180 | ND | | 200 | ND | | 180 | ND | | 190 | ND | | 180 | ND | | 260 |
| 3-Nitroaniline[2] | 99-09-2 | 160,000 | 190,000,000 | ug/kg | ND | | 180 | ND | | 200 | ND | | 180 | ND | | 200 | ND | | 180 | ND | | 190 | ND | | 180 | ND | | 260 |
| 4-Nitroaniline[2] | 100-01-6 | 160,000 | 190,000,000 | ug/kg | ND | | 180 | ND | | 200 | ND | | 180 | ND | | 200 | ND | | 180 | ND | | 190 | ND | | 180 | ND | | 260 |
| Nitrobenzene | 98-95-3 | 1,400,000 | 10,000,000 | ug/kg | ND | | 7.2 | ND | | 7.7 | ND | | 7.1 | ND | | 8 | ND | | 7.2 | ND | | 7.4 | ND | | 7.1 | ND | | 10 |
| 2-Nitrophenol | 88-75-5 | 22,000,000 | 190,000,000 | ug/kg | ND | | 35 | ND | | 38 | ND | | 35 | ND | | 39 | ND | | 35 | ND | | 37 | ND | | 35 | ND | | 51 |
| 4-Nitrophenol | 100-02-7 | 22,000,000 | 190,000,000 | ug/kg | ND | | 180 | ND | | 200 | ND | | 180 | ND | | 200 | ND | | 180 | ND | | 190 | ND | | 180 | ND | | 260 |
| N-Nitrosodi-n-propylamine | 621-64-7 | 11,000 | 10,000,000 | ug/kg | ND | | 7.2 | ND | | 7.7 | ND | | 7.1 | ND | | 8 | ND | | 7.2 | ND | | 7.4 | ND | | 7.1 | ND | | 10 |
| N-Nitrosodiphenylamine | 86-30-6 | 10,000,000 | 10,000,000 | ug/kg | ND | | 7.2 | ND | | 7.7 | ND | | 7.1 | ND | | 8 | ND | | 7.2 | ND | | 7.4 | ND | | 7.1 | ND | | 10 |
| Di-n-octylphthalate | 117-84-0 | 10,000,000 | 10,000,000 | ug/kg | ND | | 35 | ND | | 38 | ND | | 35 | ND | | 39 | ND | | 35 | ND | | 37 | ND | | 35 | ND | | 51 |
| Pentachlorophenol | 87-86-5 | 660,000 | 190,000,000 | ug/kg | ND | | 35 | ND | | 38 | ND | | 35 | ND | | 39 | ND | | 35 | ND | | 37 | ND | | 35 | ND | | 51 |
| Phenanthrene | 85-01-8 | 190,000,000 | 190,000,000 | ug/kg | 16 | | 7.2 | 3.9 | J | 7.7 | 2.5 | J | 7.1 | 70 | | 8 | 3.5 | J | 7.2 | 5.3 | J | 7.4 | 19 | | 7.1 | 81 | | 10 |
| Phenol | 108-95-2 | 190,000,000 | 190,000,000 | ug/kg | ND | | 7.2 | ND | | 7.7 | ND | | 7.1 | ND | | 8 | ND | | 7.2 | ND | | 7.4 | ND | | 7.1 | ND | | 10 |
| Pyrene | 129-00-0 | 84,000,000 | 190,000,000 | ug/kg | 30 | | 7.2 | ND | | 7.7 | ND | | 7.1 | 110 | | 8 | 2.6 | J | 7.2 | 4.9 | J | 7.4 | 36 | | 7.1 | 100 | | 10 |
| 2,4,5-Trichlorophenol | 95-95-4 | 190,000,000 | 190,000,000 | ug/kg | ND | | 35 | ND | | 38 | ND | | 35 | ND | | 39 | ND | | 35 | ND | | 37 | ND | | 35 | ND | | 51 |
| 2,4,6-Trichlorophenol | 88-06-2 | 840,000 | 190,000,000 | ug/kg | ND | | 35 | ND | | 38 | ND | | 35 | ND | | 39 | ND | | 35 | ND | | 37 | ND | | 35 | ND | | 51 |

# Table 2
## Summary of Soil Analytical Results
## Comparison to Pennsylvania Non-Residential Statewide Health Direct Contact Soil MSCs
## U. S. Steel - Proposed Samax 14.2-Acre Parcel
## Fairless Hills, Pennsylvania

| | CAS No. | PADEP Non-Residential Direct Contact Non-Use Aquifer MSC | | Location ID | STP-5 | | | STP-5 | | | STP-6 | | | STP-6 | | | STP-7 | | | STP-7 | | | STP-8 | | | STP-8 | | |
|---|---|---|---|---|---|---|---|---|---|---|---|---|---|---|---|---|---|---|---|---|---|---|---|---|---|---|---|---|
| | | | | Sample ID | 017-STP-5_1.5-2.0 | | | 018-STP-5_10.5-11 | | | 019-STP-6_1.5-2.0 | | | 020-STP-6_7.5-8 | | | 021-STP-7_1.5-2.0 | | | 022-STP-7_3.5-4.0 | | | 023-STP-8_1.5-2.0 | | | 024-STP-8_4.5-5.0 | | |
| | | | | Sample Date | 10/31/07 | | | 10/31/07 | | | 10/31/07 | | | 10/31/07 | | | 10/31/07 | | | 10/31/07 | | | 10/31/07 | | | 10/31/07 | | |
| | | | | Depth to GW | 11.00 | | | 11.00 | | | 8.00 | | | 8.00 | | | 4.00 | | | 4.00 | | | 5.00 | | | 5.00 | | |
| | | 0-2 ft Surface Soil | 2-15 ft Sub-Surface Soil | Start Depth (ft) | 1.50 | | | 10.50 | | | 1.50 | | | 7.50 | | | 1.50 | | | 3.50 | | | 1.50 | | | 4.50 | | |
| | | | | End Depth (ft) | 2.00 | | | 11.00 | | | 2.00 | | | 8.00 | | | 2.00 | | | 4.00 | | | 2.00 | | | 5.00 | | |
| **PCB (ug/kg)** | | | | **Units** | **Result** | **Q** | **RL** | **Result** | **Q** | **RL** | **Result** | **Q** | **RL** | **Result** | **Q** | **RL** | **Result** | **Q** | **RL** | **Result** | **Q** | **RL** | **Result** | **Q** | **RL** | **Result** | **Q** | **RL** |
| Aroclor 1016 | 12674-11-2 | 200,000 | 10,000,000 | ug/kg | ND | | 35 | ND | | 38 | ND | | 35 | ND | | 39 | ND | | 35 | ND | | 37 | ND | | 35 | ND | | 50 |
| Aroclor 1221 | 11104-28-2 | 160,000 | 10,000,000 | ug/kg | ND | | 35 | ND | | 38 | ND | | 35 | ND | | 39 | ND | | 35 | ND | | 37 | ND | | 35 | ND | | 50 |
| Aroclor 1232 | 11141-16-5 | 160,000 | 10,000,000 | ug/kg | ND | | 35 | ND | | 38 | ND | | 35 | ND | | 39 | ND | | 35 | ND | | 37 | ND | | 35 | ND | | 50 |
| Aroclor 1242 | 53469-21-9 | 160,000 | 10,000,000 | ug/kg | ND | | 35 | ND | | 38 | ND | | 35 | ND | | 39 | ND | | 35 | ND | | 37 | ND | | 35 | ND | | 50 |
| Aroclor 1248 | 12672-29-6 | 44,000 | 10,000,000 | ug/kg | ND | | 35 | ND | | 38 | ND | | 35 | ND | | 39 | ND | | 35 | ND | | 37 | ND | | 35 | ND | | 50 |
| Aroclor 1254 | 11097-69-1 | 44,000 | 10,000,000 | ug/kg | ND | | 35 | ND | | 38 | ND | | 35 | ND | | 39 | ND | | 35 | ND | | 37 | ND | | 35 | ND | | 50 |
| Aroclor 1260 | 11096-82-5 | 130,000 | 190,000,000 | ug/kg | ND | | 35 | ND | | 38 | ND | | 35 | ND | | 39 | ND | | 35 | ND | | 37 | ND | | 35 | ND | | 50 |
| **PP Metals (mg/kg)** | | | | **Units** | **Result** | **Q** | **RL** | **Result** | **Q** | **RL** | **Result** | **Q** | **RL** | **Result** | **Q** | **RL** | **Result** | **Q** | **RL** | **Result** | **Q** | **RL** | **Result** | **Q** | **RL** | **Result** | **Q** | **RL** |
| Antimony | 7440-36-0 | 1,100 | 190,000 | mg/kg | 0.064 | B | 0.21 | 0.013 | B | 0.23 | 0.023 | B | 0.21 | 0.01 | B | 0.24 | 0.0067 | B | 0.21 | 0.011 | B | 0.22 | 0.022 | B | 0.21 | 0.49 | | 0.31 |
| Arsenic | 7440-38-2 | 53 | 190,000 | mg/kg | 3.6 | J | 0.11 | 4.6 | J | 0.12 | 2.9 | J | 0.11 | 4.3 | J | 0.12 | 2.8 | J | 0.11 | 2.9 | J | 0.11 | 2.9 | J | 0.11 | 5.2 | J | 0.15 |
| Beryllium | 7440-41-7 | 190,000 | 190,000 | mg/kg | 0.43 | | 0.11 | 0.44 | | 0.12 | 0.26 | | 0.11 | 0.55 | | 0.12 | 0.32 | | 0.11 | 0.33 | | 0.11 | 0.34 | | 0.11 | 1.8 | | 0.15 |
| Cadmium | 7440-43-9 | 210 | 190,000 | mg/kg | 0.15 | | 0.11 | 0.095 | B | 0.12 | 0.083 | B | 0.11 | 0.079 | B | 0.12 | 0.088 | B | 0.11 | 0.089 | B | 0.11 | 0.11 | | 0.11 | 7.3 | | 0.15 |
| Chromium [a] | 7440-47-3 | 190,000 | 190,000 | mg/kg | 12.2 | J | 0.21 | 11.4 | J | 0.23 | 7.9 | J | 0.21 | 10.1 | J | 0.24 | 7.9 | J | 0.21 | 8.4 | J | 0.22 | 9 | J | 0.21 | 64.6 | J | 0.31 |
| Copper | 7440-50-8 | 100,000 | 190,000 | mg/kg | 14.5 | | 0.21 | 9.9 | | 0.23 | 8.4 | | 0.21 | 11.8 | | 0.24 | 9.6 | | 0.21 | 9.2 | | 0.22 | 10.1 | | 0.21 | 122 | | 0.31 |
| Lead | 7439-92-1 | 1,000 | 190,000 | mg/kg | 7.8 | | 0.11 | 8.6 | | 0.12 | 5.1 | | 0.11 | 10.8 | | 0.12 | 5.3 | | 0.11 | 7.9 | | 0.11 | 8.7 | | 0.11 | 176 | | 0.15 |
| Mercury | 7439-97-6 | 840 | 190,000 | mg/kg | 0.029 | B | 0.035 | 0.024 | B | 0.038 | 0.011 | B | 0.035 | 0.028 | B | 0.039 | 0.013 | B | 0.035 | 0.013 | B | 0.037 | 0.023 | B | 0.035 | 0.73 | | 0.051 |
| Nickel | 7440-02-0 | 56,000 | 190000 | mg/kg | 10.7 | J | 0.11 | 12.4 | J | 0.12 | 9.3 | J | 0.11 | 12.8 | J | 0.12 | 10.5 | J | 0.11 | 9.7 | J | 0.11 | 10.5 | J | 0.11 | 40.6 | J | 0.15 |
| Selenium | 7782-49-2 | 14,000 | 190,000 | mg/kg | 0.43 | B | 0.54 | 0.5 | B | 0.58 | 0.28 | B | 0.53 | 0.79 | | 0.59 | 0.33 | B | 0.53 | 0.39 | B | 0.55 | 0.43 | B | 0.54 | 2 | | 0.77 |
| Silver | 7440-22-4 | 14,000 | 190000 | mg/kg | 0.032 | B | 0.11 | ND | | 0.12 | ND | | 0.11 | 0.0034 | B | 0.12 | ND | | 0.11 | ND | | 0.11 | ND | | 0.11 | 1.2 | | 0.15 |
| Thallium | 7440-28-0 | 200 | 190000 | mg/kg | 0.052 | B | 0.11 | 0.07 | B | 0.12 | 0.029 | B | 0.11 | 0.086 | B | 0.12 | 0.044 | B | 0.11 | 0.046 | B | 0.11 | 0.054 | B | 0.11 | 0.24 | | 0.15 |
| Zinc | 7440-66-6 | 190,000 | 190,000 | mg/kg | 34 | J | 0.54 | 30.2 | J | 0.58 | 23.4 | J | 0.53 | 31.2 | J | 0.59 | 24.8 | J | 0.53 | 24.1 | J | 0.55 | 29.2 | J | 0.54 | 1270 | J | 0.77 |
| **General Chemistry** | | | | **Units** | **Result** | **Q** | **RL** | **Result** | **Q** | **RL** | **Result** | **Q** | **RL** | **Result** | **Q** | **RL** | **Result** | **Q** | **RL** | **Result** | **Q** | **RL** | **Result** | **Q** | **RL** | **Result** | **Q** | **RL** |
| Percent Solids | none | NS | NS | percent | 93.5 | | | 86.7 | | | 94.7 | | | 84.2 | | | 93.5 | | 1 | 90.2 | | | 93.3 | | | 65 | | |

# Table 2
## Summary of Soil Analytical Results
## Comparison to Pennsylvania Non-Residential Statewide Health Direct Contact Soil MSCs
## U. S. Steel - Proposed Samax 14.2-Acre Parcel
## Fairless Hills, Pennsylvania

| | CAS No. | PADEP Non-Residential Direct Contact Non-Use Aquifer MSC | | Location ID | STP-9 | | | STP-9 | | | STP-10 | | | STP-10 | | | STP-10 | | | STP-11 | | | STP-11 | | |
|---|---|---|---|---|---|---|---|---|---|---|---|---|---|---|---|---|---|---|---|---|---|---|---|---|---|
| | | | | Sample ID | 025-STP-9_1.5-2.0 | | | 026-STP-9_5.5-6.0 | | | 028-STP-10_1.5-2.0' | | | 029-DUP-2_110107 | | | 030-STP-10_12.5-13' | | | 032-STP-11_1.5-2.0' | | | 033-STP-11_7.5-8.0' | | |
| | | | | Sample Date | 10/31/07 | | | 08/31/07 | | | 11/01/07 | | | 11/01/07 | | | 11/01/07 | | | 11/01/07 | | | 11/01/07 | | |
| | | | | Depth to GW | 6.00 | | | 6.00 | | | 13.00 | | | 13.00 | | | 13.00 | | | 14.50 | | | 14.50 | | |
| | | 0-2 ft Surface Soil | 2-15 ft Sub-Surface Soil | Start Depth (ft) | 1.50 | | | 7.50 | | | 1.50 | | | 1.50 | | | 12.50 | | | 1.50 | | | 7.50 | | |
| | | | | End Depth (ft) | 2.00 | | | 8.00 | | | 2.00 | | | 2.00 | | | 13.00 | | | 2.00 | | | 8.00 | | |
| **TCL Volatiles** | | | | Units | Result | Q | RL | Result | Q | RL | Result | Q | RL | Result | Q | RL | Result | Q | RL | Result | Q | RL | Result | Q | RL |
| Acetone | 67-64-1 | 10,000,000 | 10,000,000 | ug/kg | ND | | 21 | 15 | J | 25 | ND | | 23 | ND | | 21 | 34 | | 23 | ND | | 22 | 21 | J | 24 |
| Benzene | 71-43-2 | 210,000 | 240,000 | ug/kg | ND | | 5.3 | ND | | 6.2 | ND | | 5.7 | ND | | 5.3 | ND | | 5.9 | ND | | 5.5 | ND | | 6 |
| Bromodichloromethane | 75-27-4 | 45,000 | 51,000 | ug/kg | ND | | 5.3 | ND | | 6.2 | ND | | 5.7 | ND | | 5.3 | ND | | 5.9 | ND | | 5.5 | ND | | 6 |
| Bromoform | 75-25-2 | 1,500,000 | 1,700,000 | ug/kg | ND | | 5.3 | ND | | 6.2 | ND | | 5.7 | ND | | 5.3 | ND | | 5.9 | ND | | 5.5 | ND | | 6 |
| Bromomethane | 74-83-9 | 270,000 | 300,000 | ug/kg | ND | | 5.3 | ND | | 6.2 | ND | | 5.7 | ND | | 5.3 | ND | | 5.9 | ND | | 5.5 | ND | | 6 |
| 2-Butanone | 78-93-3 | 10,000,000 | 10,000,000 | ug/kg | ND | | 5.3 | ND | | 6.2 | ND | | 5.7 | ND | | 5.3 | 7.8 | | 5.9 | ND | | 5.5 | 4.4 | J | 6 |
| Carbon Disulfide | 75-15-0 | 10,000,000 | 10,000,000 | ug/kg | ND | | 5.3 | ND | | 6.2 | ND | | 5.7 | ND | | 5.3 | ND | | 5.9 | ND | | 5.5 | ND | | 6 |
| Carbon Tetrachloride | 56-23-5 | 110,000 | 120,000 | ug/kg | ND | | 5.3 | ND | | 6.2 | ND | | 5.7 | ND | | 5.3 | ND | | 5.9 | ND | | 5.5 | ND | | 6 |
| Chlorobenzene | 108-90-7 | 10,000,000 | 10,000,000 | ug/kg | ND | | 5.3 | ND | | 6.2 | ND | | 5.7 | ND | | 5.3 | ND | | 5.9 | ND | | 5.5 | ND | | 6 |
| Chloroethane | 75-00-3 | 10,000,000 | 10,000,000 | ug/kg | ND | | 5.3 | ND | | 6.2 | ND | | 5.7 | ND | | 5.3 | ND | | 5.9 | ND | | 5.5 | ND | | 6 |
| Chloroform | 67-66-3 | 17,000 | 19,000 | ug/kg | ND | | 5.3 | ND | | 6.2 | ND | | 5.7 | ND | | 5.3 | ND | | 5.9 | ND | | 5.5 | ND | | 6 |
| Chloromethane | 74-87-3 | 920,000 | 1,000,000 | ug/kg | ND | | 5.3 | ND | | 6.2 | ND | | 5.7 | ND | | 5.3 | ND | | 5.9 | ND | | 5.5 | ND | | 6 |
| Isopropylbenzene | 98-82-8 | 10,000,000 | 10,000,000 | ug/kg | ND | | 5.3 | ND | | 6.2 | ND | | 5.7 | ND | | 5.3 | ND | | 5.9 | ND | | 5.5 | 1.3 | J | 6 |
| Cyclohexane | 110-82-7 | 100,000 | 100,000 | ug/kg | ND | | 5.3 | ND | | 6.2 | ND | | 5.7 | ND | | 5.3 | ND | | 5.9 | ND | | 5.5 | ND | | 6 |
| 1,2-Dibromoethane | 106-93-4 | 930 | 8,600 | ug/kg | ND | | 5.3 | ND | | 6.2 | ND | | 5.7 | ND | | 5.3 | ND | | 5.9 | ND | | 5.5 | ND | | 6 |
| 1,2-Dibromo-3-chloropropane | 96-12-8 | 11,000 | 12,000 | ug/kg | ND | | 5.3 | ND | | 6.2 | ND | | 5.7 | ND | | 5.3 | ND | | 5.9 | ND | | 5.5 | ND | | 6 |
| Dibromochloromethane | 124-48-1 | 61,000 | 70,000 | ug/kg | ND | | 5.3 | ND | | 6.2 | ND | | 5.7 | ND | | 5.3 | ND | | 5.9 | ND | | 5.5 | ND | | 6 |
| 1,4-Dichlorobenzene | 106-46-7 | 3,300,000 | 190,000,000 | ug/kg | ND | | 5.3 | ND | | 6.2 | ND | | 5.7 | ND | | 5.3 | ND | | 5.9 | ND | | 5.5 | ND | | 6 |
| 1,2-Dichlorobenzene | 95-50-1 | 10,000,000 | 10,000,000 | ug/kg | ND | | 5.3 | ND | | 6.2 | ND | | 5.7 | ND | | 5.3 | ND | | 5.9 | ND | | 5.5 | ND | | 6 |
| 1,3-Dichlorobenzene | 541-73-1 | 10,000,000 | 10,000,000 | ug/kg | ND | | 5.3 | ND | | 6.2 | ND | | 5.7 | ND | | 5.3 | ND | | 5.9 | ND | | 5.5 | ND | | 6 |
| Dichlorodifluoromethane | 75-71-8 | 10,000,000 | 10,000,000 | ug/kg | ND | | 5.3 | ND | | 6.2 | ND | | 5.7 | ND | | 5.3 | ND | | 5.9 | ND | | 5.5 | ND | | 6 |
| 1,1-Dichloroethane | 75-34-3 | 1,000,000 | 1,200,000 | ug/kg | ND | | 5.3 | ND | | 6.2 | ND | | 5.7 | ND | | 5.3 | ND | | 5.9 | ND | | 5.5 | ND | | 6 |
| 1,2-Dichloroethane | 107-06-2 | 63,000 | 73,000 | ug/kg | ND | | 5.3 | ND | | 6.2 | ND | | 5.7 | ND | | 5.3 | ND | | 5.9 | ND | | 5.5 | ND | | 6 |
| trans-1,2-Dichloroethene | 156-60-5 | 3,700,000 | 4,300,000 | ug/kg | ND | | 5.3 | ND | | 6.2 | ND | | 5.7 | ND | | 5.3 | ND | | 5.9 | ND | | 5.5 | ND | | 6 |
| cis-1,2-Dichloroethene | 156-59-2 | 1,900,000 | 2,100,000 | ug/kg | ND | | 5.3 | ND | | 6.2 | ND | | 5.7 | ND | | 5.3 | ND | | 5.9 | ND | | 5.5 | ND | | 6 |
| 1,1-Dichloroethene | 75-35-4 | 33,000 | 38,000 | ug/kg | ND | | 5.3 | ND | | 6.2 | ND | | 5.7 | ND | | 5.3 | ND | | 5.9 | ND | | 5.5 | ND | | 6 |
| 1,2-Dichloropropane | 78-87-5 | 160,000 | 180,000 | ug/kg | ND | | 5.3 | ND | | 6.2 | ND | | 5.7 | ND | | 5.3 | ND | | 5.9 | ND | | 5.5 | ND | | 6 |
| trans-1,3-Dichloropropene[1] | 10061-02-6 | 410,000 | 470,000 | ug/kg | ND | | 5.3 | ND | | 6.2 | ND | | 5.7 | ND | | 5.3 | ND | | 5.9 | ND | | 5.5 | ND | | 6 |
| cis-1,3-Dichloropropene | 10061-01-5 | 410,000 | 470,000 | ug/kg | ND | | 5.3 | ND | | 6.2 | ND | | 5.7 | ND | | 5.3 | ND | | 5.9 | ND | | 5.5 | ND | | 6 |
| Ethylbenzene | 100-41-4 | 10,000,000 | 10,000,000 | ug/kg | ND | | 5.3 | ND | | 6.2 | ND | | 5.7 | ND | | 5.3 | ND | | 5.9 | ND | | 5.5 | ND | | 6 |
| 2-Hexanone | 591-78-6 | 100,000 | 100,000 | ug/kg | ND | | 5.3 | ND | | 6.2 | ND | | 5.7 | ND | | 5.3 | ND | | 5.9 | ND | | 5.5 | ND | | 6 |
| Methyl Acetate | 79-20-9 | 10,000,000 | 10,000,000 | ug/kg | ND | | 5.3 | ND | | 6.2 | ND | | 5.7 | ND | | 5.3 | ND | | 5.9 | ND | | 5.5 | ND | | 6 |
| Methyl tert-Butyl Ether | 1634-04-4 | 3,200,000 | 3,700,000 | ug/kg | ND | | 5.3 | ND | | 6.2 | ND | | 5.7 | ND | | 5.3 | ND | | 5.9 | ND | | 5.5 | ND | | 6 |
| 4-Methyl-2-pentanone | 108-10-1 | 4,300,000 | 4,900,000 | ug/kg | ND | | 5.3 | ND | | 6.2 | ND | | 5.7 | ND | | 5.3 | ND | | 5.9 | ND | | 5.5 | ND | | 5 |
| Methylcyclohexane | 108-87-2 | NS | NS | ug/kg | ND | | 5.3 | ND | | 6.2 | ND | | 5.7 | ND | | 5.3 | ND | | 5.9 | ND | | 5.5 | ND | | 6 |
| Methylene Chloride | 75-09-2 | 3,500,000 | 4,000,000 | ug/kg | 0.94 | J | 5.3 | 2.2 | J | 6.2 | 2.4 | J | 5.7 | ND | | 5.3 | ND | | 5.9 | ND | | 5.5 | ND | | 6 |
| Styrene | 100-42-5 | 1,000,000 | 1,000,000 | ug/kg | ND | | 5.3 | ND | | 6.2 | ND | | 5.7 | ND | | 5.3 | ND | | 5.9 | ND | | 5.5 | ND | | 6 |
| 1,1,2,2-Tetrachloroethane | 79-34-5 | 28,000 | 33,000 | ug/kg | ND | | 5.3 | ND | | 6.2 | ND | | 5.7 | ND | | 5.3 | ND | | 5.9 | ND | | 5.5 | ND | | 6 |
| Tetrachloroethene | 127-18-4 | 1,500,000 | 3,300,000 | ug/kg | ND | | 5.3 | ND | | 6.2 | ND | | 5.7 | ND | | 5.3 | ND | | 5.9 | ND | | 5.5 | ND | | 6 |
| Toluene | 108-88-3 | 10,000,000 | 10,000,000 | ug/kg | ND | | 5.3 | ND | | 6.2 | ND | | 5.7 | ND | | 5.3 | ND | | 5.9 | ND | | 5.5 | ND | | 6 |
| Xylenes (Total) | 1330-20-7 | 10,000,000 | 10,000,000 | ug/kg | ND | | 16 | ND | | 18 | ND | | 17 | ND | | 16 | ND | | 18 | ND | | 17 | ND | | 18 |
| 1,1,2-Trichloro-1,2,2-trifluoroethane | 76-13-1 | 190,000,000 | 190,000,000 | ug/kg | ND | | 5.3 | ND | | 6.2 | ND | | 5.7 | ND | | 5.3 | ND | | 5.9 | ND | | 5.5 | ND | | 6 |
| 1,2,4-Trichlorobenzene | 120-82-1 | 10,000,000 | 10,000,000 | ug/kg | ND | | 5.3 | ND | | 6.2 | ND | | 5.7 | ND | | 5.3 | ND | | 5.9 | ND | | 5.5 | ND | | 6 |
| 1,1,1-Trichloroethane | 71-55-6 | 10,000,000 | 10,000,000 | ug/kg | ND | | 5.3 | ND | | 6.2 | ND | | 5.7 | ND | | 5.3 | ND | | 5.9 | ND | | 5.5 | ND | | 6 |
| 1,1,2-Trichloroethane | 79-00-5 | 100,000 | 120,000 | ug/kg | ND | | 5.3 | ND | | 6.2 | ND | | 5.7 | ND | | 5.3 | ND | | 5.9 | ND | | 5.5 | ND | | 6 |
| Trichloroethene | 79-01-6 | 970,000 | 1,100,000 | ug/kg | ND | | 5.3 | ND | | 6.2 | ND | | 5.7 | ND | | 5.3 | ND | | 5.9 | ND | | 5.5 | ND | | 6 |
| Trichlorofluoromethane | 75-69-4 | 10,000,000 | 10,000,000 | ug/kg | ND | | 5.3 | ND | | 6.2 | ND | | 5.7 | ND | | 5.3 | ND | | 5.9 | ND | | 5.5 | ND | | 6 |
| Vinyl Chloride | 75-01-4 | 53,000 | 220,000 | ug/kg | ND | | 5.3 | ND | | 6.2 | ND | | 5.7 | ND | | 5.3 | ND | | 5.9 | ND | | 5.5 | ND | | 6 |

# Table 2
## Summary of Soil Analytical Results
## Comparison to Pennsylvania Non-Residential Statewide Health Direct Contact Soil MSCs
## U. S. Steel - Proposed Samax 14.2-Acre Parcel
## Fairless Hills, Pennsylvania

| | CAS No. | PADEP Non-Residential Direct Contact Non-Use Aquifer MSC | | Location ID | STP-9 | | | STP-9 | | | STP-10 | | | STP-10 | | | STP-10 | | | STP-11 | | | STP-11 | | |
|---|---|---|---|---|---|---|---|---|---|---|---|---|---|---|---|---|---|---|---|---|---|---|---|---|---|
| | | | | Sample ID | 025-STP-9_1.5-2.0 | | | 026-STP-9_5.5-6.0 | | | 028-STP-10_1.5-2.0' | | | 029-DUP-2_110107 | | | 030-STP-10_12.5-13' | | | 032-STP-11_1.5-2.0' | | | 033-STP-11_7.5-8.0' | | |
| | | | | Sample Date | 10/31/07 | | | 08/31/07 | | | 11/01/07 | | | 11/01/07 | | | 11/01/07 | | | 11/01/07 | | | 11/01/07 | | |
| | | | | Depth to GW | 6.00 | | | 6.00 | | | 13.00 | | | 13.00 | | | 13.00 | | | 14.50 | | | 14.50 | | |
| | | 0-2 ft Surface Soil | 2-15 ft Sub-Surface Soil | Start Depth (ft) | 1.50 | | | 7.50 | | | 1.50 | | | 1.50 | | | 12.50 | | | 1.50 | | | 7.50 | | |
| | | | | End Depth (ft) | 2.00 | | | 8.00 | | | 2.00 | | | 2.00 | | | 13.00 | | | 2.00 | | | 8.00 | | |
| **TCL Semivolatiles** | | | | Units | Result | Q | RL | Result | Q | RL | Result | Q | RL | Result | Q | RL | Result | Q | RL | Result | Q | RL | Result | Q | RL |
| Acenaphthene | 83-32-9 | 170,000,000 | 190,000,000 | ug/kg | 1.8 | J | 7.1 | ND | | 7.7 | ND | | 7.4 | ND | | 7.4 | ND | | 7.7 | ND | | 15 | ND | | 8 |
| Acenaphthylene | 208-96-8 | 170,000,000 | 190,000,000 | ug/kg | 5.4 | J | 7.1 | ND | | 7.7 | 2.8 | J | 7.4 | 8.5 | | 7.4 | ND | | 7.7 | ND | | 15 | ND | | 8 |
| Acetaphenone | 98-86-2 | 10,000,000 | 10,000,000 | ug/kg | 3.1 | J | 35 | 3.3 | J | 38 | ND | | 36 | ND | | 37 | ND | | 38 | ND | | 72 | ND | | 40 |
| Anthracene | 120-12-7 | 190,000,000 | 190,000,000 | ug/kg | 6.3 | J | 7.1 | ND | | 7.7 | ND | | 7.4 | 6.4 | J | 7.4 | ND | | 7.7 | ND | | 15 | ND | | 8 |
| Atrazine[4] | 1912-24-9 | 360,000 | 190,000,000 | ug/kg | ND | | 35 | ND | | 38 | ND | | 36 | ND | | 37 | ND | | 38 | ND | | 72 | ND | | 40 |
| Benzaldehyde | 100-52-7 | NS | NS | ug/kg | ND | | 35 | ND | | 38 | ND | | 36 | ND | | 37 | ND | | 38 | ND | | 72 | ND | | 40 |
| Benzo(a)anthracene | 56-55-3 | 110,000 | 190,000,000 | ug/kg | 18 | | 7.1 | 6.3 | J | 7.7 | 5.9 | J | 7.4 | 19 | | 7.4 | ND | | 7.7 | 11 | J | 15 | ND | | 8 |
| Benzo(a)pyrene | 50-32-8 | 11,000 | 190,000,000 | ug/kg | 18 | | 7.1 | 7.2 | J | 7.7 | 6.2 | J | 7.4 | 16 | | 7.4 | 3.1 | J | 7.7 | 19 | | 15 | ND | | 8 |
| Benzo(b)fluoranthene | 205-99-2 | 110,000 | 190,000,000 | ug/kg | 26 | | 7.1 | 9.3 | | 7.7 | 7.6 | | 7.4 | 28 | | 7.4 | ND | | 7.7 | 23 | | 15 | ND | | 8 |
| Benzo(g,h,i)perylene | 191-24-2 | 170,000,000 | 190,000,000 | ug/kg | 16 | | 7.1 | 5.9 | J | 7.7 | 5.8 | J | 7.4 | 17 | | 7.4 | 2.7 | J | 7.7 | 16 | | 15 | ND | | 8 |
| Benzo(k)fluoranthene | 207-08-9 | 1,100,000 | 190,000,000 | ug/kg | 6 | J | 7.1 | 3.7 | J | 7.7 | 3.5 | J | 7.4 | 7.2 | J | 7.4 | ND | | 7.7 | 8.5 | J | 15 | ND | | 8 |
| 1,1'-Biphenyl | 92-52-4 | 140,000,000 | 190,000,000 | ug/kg | 1.9 | J | 35 | ND | | 38 | ND | | 36 | 13 | J | 37 | ND | | 38 | ND | | 72 | ND | | 40 |
| bis(2-Chloroethoxy) methane[7] | 111-91-1 | 100,000 | 100,000 | ug/kg | ND | | 35 | ND | | 38 | ND | | 36 | ND | | 37 | ND | | 38 | ND | | 72 | ND | | 40 |
| bis(2'-Chloroethyl) ether | 111-44-4 | 5,000 | 5,700 | ug/kg | ND | | 7.1 | ND | | 7.7 | ND | | 7.4 | ND | | 7.4 | ND | | 7.7 | ND | | 15 | ND | | 8 |
| 2,2'-oxybis(1-Chloropropane) | 108-60-1 | 160,000 | 190,000 | ug/kg | ND | | 7.1 | ND | | 7.7 | ND | | 7.4 | ND | | 7.4 | ND | | 7.7 | ND | | 15 | ND | | 8 |
| bis-(2-Ethylhexyl)phthalate | 117-81-7 | 5,700,000 | 10,000,000 | ug/kg | 8.6 | J | 35 | 6.3 | J | 38 | ND | | 36 | 8.3 | J | 37 | 11 | J | 38 | 33 | J | 72 | 9.8 | J | 40 |
| 4-Bromophenyl-phenylether[7] | 101-55-3 | 100,000 | 100,000 | ug/kg | ND | | 35 | ND | | 38 | ND | | 36 | ND | | 37 | ND | | 38 | ND | | 72 | ND | | 40 |
| Butylbenzylphthalate | 85-68-7 | 10,000,000 | 10,000,000 | ug/kg | ND | | 35 | ND | | 38 | 3.3 | J | 36 | 6.1 | J | 37 | 11 | J | 38 | ND | | 72 | 9 | J | 40 |
| Caprolactam | 105-60-2 | NS | NS | ug/kg | 9.2 | J | 35 | ND | | 38 | ND | | 36 | ND | | 37 | ND | | 38 | ND | | 72 | ND | | 40 |
| Carbazole | 86-74-8 | 4,000,000 | 190,000,000 | ug/kg | 1.9 | J | 7.1 | ND | | 7.7 | ND | | 7.4 | 3 | J | 7.4 | ND | | 7.7 | ND | | 15 | ND | | 8 |
| 4-Chloro-3-methylphenol | 59-50-7 | 14,000,000 | 190,000,000 | ug/kg | ND | | 35 | ND | | 38 | ND | | 36 | ND | | 37 | ND | | 38 | ND | | 72 | ND | | 40 |
| 4-Chloroaniline | 106-47-8 | 11,000,000 | 190,000,000 | ug/kg | ND | | 35 | ND | | 38 | ND | | 36 | ND | | 37 | ND | | 38 | ND | | 72 | ND | | 40 |
| 2-Chloronapthalene | 91-58-7 | 190,000,000 | 190,000,000 | ug/kg | ND | | 7.1 | ND | | 7.7 | ND | | 7.4 | ND | | 7.4 | ND | | 7.7 | ND | | 15 | ND | | 8 |
| 2-Chlorophenol | 95-57-8 | 920,000 | 1,100,000 | ug/kg | ND | | 35 | ND | | 38 | ND | | 36 | ND | | 37 | ND | | 38 | ND | | 72 | ND | | 40 |
| 4-Chlorophenyl-phenylether[7] | 7005-72-3 | 100,000 | 100,000 | ug/kg | ND | | 35 | ND | | 38 | ND | | 36 | ND | | 37 | ND | | 38 | ND | | 72 | ND | | 40 |
| Chrysene | 218-01-9 | 11,000,000 | 190,000,000 | ug/kg | 21 | | 7.1 | 7.6 | J | 7.7 | 10 | | 7.4 | 35 | | 7.4 | ND | | 7.7 | 17 | | 15 | ND | | 8 |
| 2-Methylphenol | 95-48-7 | 10,000,000 | 10,000,000 | ug/kg | ND | | 35 | ND | | 38 | ND | | 36 | ND | | 37 | ND | | 38 | ND | | 72 | ND | | 40 |
| 4-Methylphenol | 106-44-5 | 14,000,000 | 190,000,000 | ug/kg | ND | | 35 | ND | | 38 | ND | | 36 | ND | | 37 | ND | | 38 | ND | | 72 | ND | | 40 |
| Dibenzo(a,h)anthracene | 53-70-3 | 11,000 | 190,000,000 | ug/kg | 3.7 | J | 7.1 | ND | | 7.7 | ND | | 7.4 | ND | | 7.4 | ND | | 7.7 | ND | | 15 | ND | | 8 |
| Dibenzofuran[7] | 132-64-9 | 100,000 | 100,000 | ug/kg | 2.8 | J | 35 | ND | | 38 | 2.9 | J | 36 | 19 | J | 37 | ND | | 38 | ND | | 72 | ND | | 40 |
| 3,3'-Dichlorobenzidine | 91-94-1 | 160,000 | 190,000,000 | ug/kg | ND | | 35 | ND | | 38 | ND | | 36 | ND | | 37 | ND | | 38 | ND | | 72 | ND | | 40 |
| 2,4-Dichlorophenol | 120-83-2 | 8,400,000 | 190,000,000 | ug/kg | ND | | 7.1 | ND | | 7.7 | ND | | 7.4 | ND | | 7.4 | ND | | 7.7 | ND | | 15 | ND | | 8 |
| Diethylphthalate | 84-66-2 | 10,000,000 | 10,000,000 | ug/kg | ND | | 35 | ND | | 38 | ND | | 36 | ND | | 37 | ND | | 38 | ND | | 72 | ND | | 40 |
| 2,4-Dimethylphenol | 105-67-9 | 10,000,000 | 10,000,000 | ug/kg | ND | | 35 | ND | | 38 | ND | | 36 | ND | | 37 | ND | | 38 | ND | | 72 | ND | | 40 |
| Dimethylphthalate[7] | 131-11-3 | 100,000 | 100,000 | ug/kg | ND | | 35 | ND | | 38 | ND | | 36 | ND | | 37 | ND | | 38 | ND | | 72 | ND | | 40 |
| Di-n-butylphthalate | 84-74-2 | 10,000,000 | 10,000,000 | ug/kg | ND | | 35 | ND | | 38 | ND | | 36 | 9.1 | J | 37 | 7.9 | J | 38 | ND | | 72 | 8.3 | J | 40 |
| 4,6-Dinitro-2-methylphenol[4,7] | 534-52-1 | 100,000 | 100,000 | ug/kg | ND | | 180 | ND | | 200 | ND | | 190 | ND | | 190 | ND | | 200 | ND | | 370 | ND | | 200 |
| 2,4-Dinitrophenol | 51-28-5 | 5,600,000 | 190,000,000 | ug/kg | ND | | 180 | ND | | 200 | ND | | 190 | ND | | 190 | ND | | 200 | ND | | 370 | ND | | 200 |
| 2,4-Dinitrotoluene | 121-14-2 | 260,000 | 190,000,000 | ug/kg | ND | | 35 | ND | | 38 | ND | | 36 | ND | | 37 | ND | | 38 | ND | | 72 | ND | | 40 |
| 2,6-Dinitrotoluene | 606-20-2 | 2,800,000 | 190,000,000 | ug/kg | ND | | 35 | ND | | 38 | ND | | 36 | ND | | 37 | ND | | 38 | ND | | 72 | ND | | 40 |
| Fluoranthene | 206-44-0 | 110,000,000 | 190,000,000 | ug/kg | 31 | | 7.1 | 14 | | 7.7 | 8.9 | | 7.4 | 32 | | 7.4 | 4.6 | J | 7.7 | 26 | | 15 | 2.9 | J | 8 |
| Fluorene | 86-73-7 | 110,000,000 | 190,000,000 | ug/kg | 3.2 | J | 7.1 | ND | | 7.7 | ND | | 7.4 | ND | | 7.4 | ND | | 7.7 | ND | | 15 | ND | | 8 |
| Hexachlorobenzene | 118-74-1 | 50,000 | 190,000,000 | ug/kg | ND | | 7.1 | ND | | 7.7 | ND | | 7.4 | ND | | 7.4 | ND | | 7.7 | ND | | 15 | ND | | 8 |
| Hexachlorobutadiene | 87-68-3 | 560,000 | 10,000,000 | ug/kg | ND | | 7.1 | ND | | 7.7 | ND | | 7.4 | ND | | 7.4 | ND | | 7.7 | ND | | 15 | ND | | 8 |
| Hexachlorocyclopentadiene | 77-47-4 | 10,000,000 | 10,000,000 | ug/kg | ND | | 35 | ND | | 38 | ND | | 36 | ND | | 37 | ND | | 38 | ND | | 72 | ND | | 40 |
| Hexachloroethane | 67-72-1 | 2,800,000 | 190,000,000 | ug/kg | ND | | 35 | ND | | 38 | ND | | 36 | ND | | 37 | ND | | 38 | ND | | 72 | ND | | 40 |
| Indeno(1,2,3-cd)pyrene | 193-39-5 | 110,000 | 190,000,000 | ug/kg | 13 | | 7.1 | 4.6 | J | 7.7 | 4.6 | J | 7.4 | 14 | | 7.4 | ND | | 7.7 | 11 | J | 15 | ND | | 8 |
| Isophorone | 78-59-1 | 10,000,000 | 10,000,000 | ug/kg | ND | | 35 | ND | | 38 | ND | | 36 | ND | | 37 | ND | | 38 | ND | | 72 | ND | | 40 |
| 2-Methylnaphthalene | 91-57-6 | 10,000,000 | 10,000,000 | ug/kg | 3.9 | J | 7.1 | ND | | 7.7 | 7.7 | | 7.4 | 64 | | 7.4 | ND | | 7.7 | ND | | 15 | 22 | | 8 |
| Naphthalene | 91-20-3 | 56,000,000 | 190,000,000 | ug/kg | 7.3 | | 7.1 | ND | | 7.7 | 6 | J | 7.4 | 34 | | 7.4 | 5 | J | 7.7 | ND | | 15 | 230 | | 8 |
| 2-Nitroaniline[7] | 88-74-4 | 160,000 | 190,000,000 | ug/kg | ND | | 180 | ND | | 200 | ND | | 190 | ND | | 190 | ND | | 200 | ND | | 370 | ND | | 200 |
| 3-Nitroaniline[7] | 99-09-2 | 160,000 | 190,000,000 | ug/kg | ND | | 180 | ND | | 200 | ND | | 190 | ND | | 190 | ND | | 200 | ND | | 370 | ND | | 200 |
| 4-Nitroaniline[7] | 100-01-6 | 160,000 | 190,000,000 | ug/kg | ND | | 180 | ND | | 200 | ND | | 190 | ND | | 190 | ND | | 200 | ND | | 370 | ND | | 200 |
| Nitrobenzene | 98-95-3 | 1,400,000 | 10,000,000 | ug/kg | ND | | 7.1 | ND | | 7.7 | ND | | 7.4 | ND | | 7.4 | ND | | 7.7 | ND | | 15 | ND | | 8 |
| 2-Nitrophenol | 88-75-5 | 22,000,000 | 190,000,000 | ug/kg | ND | | 35 | ND | | 38 | ND | | 36 | ND | | 37 | ND | | 38 | ND | | 72 | ND | | 40 |
| 4-Nitrophenol | 100-02-7 | 22,000,000 | 190,000,000 | ug/kg | ND | | 180 | ND | | 200 | ND | | 190 | ND | | 190 | ND | | 200 | ND | | 370 | ND | | 200 |
| N-Nitrosodi-n-propylamine | 621-64-7 | 11,000 | 10,000,000 | ug/kg | ND | | 7.1 | ND | | 7.7 | ND | | 7.4 | ND | | 7.4 | ND | | 7.7 | ND | | 15 | ND | | 8 |
| N-Nitrosodiphenylamine | 86-30-6 | 10,000,000 | 10,000,000 | ug/kg | ND | | 7.1 | ND | | 7.7 | ND | | 7.4 | ND | | 7.4 | ND | | 7.7 | ND | | 15 | ND | | 8 |
| Di-n-octylphthalate | 117-84-0 | 10,000,000 | 10,000,000 | ug/kg | ND | | 35 | ND | | 38 | ND | | 36 | ND | | 37 | ND | | 38 | ND | | 72 | ND | | 40 |
| Pentachlorophenol | 87-86-5 | 660,000 | 190,000,000 | ug/kg | ND | | 35 | ND | | 38 | ND | | 36 | ND | | 37 | ND | | 38 | ND | | 72 | ND | | 40 |
| Phenanthrene | 85-01-8 | 190,000,000 | 190,000,000 | ug/kg | 22 | | 7.1 | 9.1 | | 7.7 | 13 | | 7.4 | 67 | | 7.4 | 4.6 | J | 7.7 | 12 | J | 15 | ND | | 8 |
| Phenol | 108-95-2 | 190,000,000 | 190,000,000 | ug/kg | ND | | 7.1 | ND | | 7.7 | ND | | 7.4 | ND | | 7.4 | ND | | 7.7 | ND | | 15 | ND | | 8 |
| Pyrene | 129-00-0 | 84,000,000 | 190,000,000 | ug/kg | 28 | | 7.1 | 12 | | 7.7 | 11 | | 7.4 | 36 | | 7.4 | 4.5 | J | 7.7 | 21 | | 15 | 2.4 | J | 8 |
| 2,4,5-Trichlorophenol | 95-95-4 | 190,000,000 | 190,000,000 | ug/kg | ND | | 35 | ND | | 38 | ND | | 36 | ND | | 37 | ND | | 38 | ND | | 72 | ND | | 40 |
| 2,4,6-Trichlorophenol | 88-06-2 | 840,000 | 190,000,000 | ug/kg | ND | | 35 | ND | | 38 | ND | | 36 | ND | | 37 | ND | | 38 | ND | | 72 | ND | | 40 |

# Table 2
## Summary of Soil Analytical Results
## Comparison to Pennsylvania Non-Residential Statewide Health Direct Contact Soil MSCs
## U. S. Steel - Proposed Samax 14.2-Acre Parcel
## Fairless Hills, Pennsylvania

| | CAS No. | PADEP Non-Residential Direct Contact Non-Use Aquifer MSC | | Location ID | STP-9 | | | STP-9 | | | STP-10 | | | STP-10 | | | STP-10 | | | STP-11 | | | STP-11 | | |
|---|---|---|---|---|---|---|---|---|---|---|---|---|---|---|---|---|---|---|---|---|---|---|---|---|---|
| | | | | Sample ID | 025-STP-9_1.5-2.0 | | | 026-STP-9_5.5-6.0 | | | 028-STP-10_1.5-2.0' | | | 029-DUP-2_110107 | | | 030-STP-10_12.5-13' | | | 032-STP-11_1.5-2.0' | | | 033-STP-11_7.5-8.0' | | |
| | | | | Sample Date | 10/31/07 | | | 08/31/07 | | | 11/01/07 | | | 11/01/07 | | | 11/01/07 | | | 11/01/07 | | | 11/01/07 | | |
| | | | | Depth to GW | 6.00 | | | 6.00 | | | 13.00 | | | 13.00 | | | 13.00 | | | 14.50 | | | 14.50 | | |
| | | 0-2 ft Surface Soil | 2-15 ft Sub-Surface Soil | Start Depth (ft) | 1.50 | | | 7.50 | | | 1.50 | | | 1.50 | | | 12.50 | | | 1.50 | | | 7.50 | | |
| | | | | End Depth (ft) | 2.00 | | | 8.00 | | | 2.00 | | | 2.00 | | | 13.00 | | | 2.00 | | | 8.00 | | |
| **PCB (ug/kg)** | | | | **Units** | **Result** | **Q** | **RL** | **Result** | **Q** | **RL** | **Result** | **Q** | **RL** | **Result** | **Q** | **RL** | **Result** | **Q** | **RL** | **Result** | **Q** | **RL** | **Result** | **Q** | **RL** |
| Aroclor 1016 | 12674-11-2 | 200,000 | 10,000,000 | ug/kg | ND | | 35 | ND | | 38 | ND | | 36 | ND | | 37 | ND | | 38 | ND | | 36 | ND | | 40 |
| Aroclor 1221 | 11104-28-2 | 160,000 | 10,000,000 | ug/kg | ND | | 35 | ND | | 38 | ND | | 36 | ND | | 37 | ND | | 38 | ND | | 36 | ND | | 40 |
| Aroclor 1232 | 11141-16-5 | 160,000 | 10,000,000 | ug/kg | ND | | 35 | ND | | 38 | ND | | 36 | ND | | 37 | ND | | 38 | ND | | 36 | ND | | 40 |
| Aroclor 1242 | 53469-21-9 | 160,000 | 10,000,000 | ug/kg | ND | | 35 | ND | | 38 | ND | | 36 | ND | | 37 | ND | | 38 | ND | | 36 | ND | | 40 |
| Aroclor 1248 | 12672-29-6 | 44,000 | 10,000,000 | ug/kg | ND | | 35 | ND | | 38 | ND | | 36 | ND | | 37 | ND | | 38 | ND | | 36 | ND | | 40 |
| Aroclor 1254 | 11097-69-1 | 44,000 | 10,000,000 | ug/kg | ND | | 35 | ND | | 38 | ND | | 36 | ND | | 37 | ND | | 38 | 35 | J | 36 | ND | | 40 |
| Aroclor 1260 | 11096-82-5 | 130,000 | 190,000,000 | ug/kg | ND | | 35 | ND | | 38 | ND | | 36 | ND | | 37 | ND | | 38 | ND | | 36 | ND | | 40 |
| **PP Metals (mg/kg)** | | | | **Units** | **Result** | **Q** | **RL** | **Result** | **Q** | **RL** | **Result** | **Q** | **RL** | **Result** | **Q** | **RL** | **Result** | **Q** | **RL** | **Result** | **Q** | **RL** | **Result** | **Q** | **RL** |
| Antimony | 7440-36-0 | 1,100 | 190,000 | mg/kg | 0.028 | B | 0.21 | 0.021 | B | 0.23 | 0.047 | B | 0.22 | 0.035 | B | 0.22 | 0.014 | B | 0.23 | 0.028 | B | 0.22 | 0.011 | B | 0.24 |
| Arsenic | 7440-38-2 | 53 | 190,000 | mg/kg | 2.9 | J | 0.11 | 4.6 | J | 0.12 | 3 | | 0.11 | 3.5 | | 0.11 | 6.4 | | 0.11 | 4.7 | | 0.11 | 4.3 | | 0.12 |
| Beryllium | 7440-41-7 | 190,000 | 190,000 | mg/kg | 0.36 | | 0.11 | 0.51 | | 0.12 | 0.35 | | 0.11 | 0.43 | | 0.11 | 0.56 | | 0.11 | 0.34 | | 0.11 | 0.48 | | 0.12 |
| Cadmium | 7440-43-9 | 210 | 190,000 | mg/kg | 0.1 | B | 0.11 | 0.097 | B | 0.12 | 0.13 | | 0.11 | 0.29 | | 0.11 | 0.13 | | 0.11 | 0.14 | | 0.11 | 0.14 | | 0.12 |
| Chromium | 7440-47-3 | 190,000 | 190,000 | mg/kg | 8.3 | J | 0.21 | 11.1 | J | 0.23 | 24.9 | | 0.22 | 465 | | 0.22 | 10.9 | | 0.23 | 8.3 | | 0.22 | 10 | | 0.24 |
| Copper | 7440-50-8 | 100,000 | 190,000 | mg/kg | 11.1 | | 0.21 | 12.4 | | 0.23 | 12.4 | J | 0.22 | 13.8 | J | 0.22 | 12.5 | J | 0.23 | 12.2 | J | 0.22 | 12.7 | J | 0.24 |
| Lead | 7439-92-1 | 1,000 | 190,000 | mg/kg | 6.9 | | 0.11 | 11.4 | | 0.12 | 9.5 | | 0.11 | 15.9 | | 0.11 | 13.6 | | 0.11 | 9.4 | | 0.11 | 11.8 | | 0.12 |
| Mercury | 7439-97-6 | 840 | 190,000 | mg/kg | 0.021 | B | 0.035 | 0.032 | B | 0.038 | 0.033 | B | 0.036 | 0.041 | | 0.037 | 0.23 | | 0.038 | 0.031 | B | 0.036 | 0.018 | B | 0.04 |
| Nickel | 7440-02-0 | 56,000 | 190000 | mg/kg | 10.1 | J | 0.11 | 13.7 | J | 0.12 | 12.2 | | 0.11 | 10.2 | | 0.11 | 13.5 | | 0.11 | 11.3 | | 0.11 | 14.4 | | 0.12 |
| Selenium | 7782-49-2 | 14,000 | 190,000 | mg/kg | 0.34 | B | 0.53 | 0.55 | B | 0.58 | 0.19 | B | 0.55 | 0.3 | B | 0.55 | 0.53 | B | 0.57 | 0.21 | B | 0.55 | 0.45 | B | 0.6 |
| Silver | 7440-22-4 | 14,000 | 190000 | mg/kg | ND | | 0.11 | ND | | 0.12 | 0.015 | B | 0.11 | 0.033 | B | 0.11 | 0.024 | B | 0.11 | 0.015 | B | 0.11 | 0.023 | B | 0.12 |
| Thallium | 7440-28-0 | 200 | 190000 | mg/kg | 0.05 | B | 0.11 | 0.082 | B | 0.12 | 0.052 | B | 0.11 | 0.061 | B | 0.11 | 0.11 | | 0.11 | 0.05 | B | 0.11 | 0.089 | B | 0.12 |
| Zinc | 7440-66-6 | 190,000 | 190,000 | mg/kg | 28.3 | J | 0.53 | 34.4 | J | 0.58 | 41.8 | J | 0.55 | 59.9 | J | 0.55 | 38 | J | 0.57 | 34.8 | J | 0.55 | 36.8 | J | 0.6 |
| **General Chemistry** | | | | **Units** | **Result** | **Q** | **RL** | **Result** | **Q** | **RL** | **Result** | **Q** | **RL** | **Result** | **Q** | **RL** | **Result** | **Q** | **RL** | **Result** | **Q** | **RL** | **Result** | **Q** | **RL** |
| Percent Solids | none | NS | NS | percent | 94.9 | | | 86.8 | | | 90.7 | | | 90.2 | | | 87 | | | 91.7 | | | 83.5 | | |

# Table 2
## Summary of Soil Analytical Results
## Comparison to Pennsylvania Non-Residential Statewide Health Direct Contact Soil MSCs
## U. S. Steel - Proposed Samax 14.2-Acre Parcel
## Fairless Hills, Pennsylvania

| | CAS No. | PADEP Non-Residential Direct Contact Non-Use Aquifer MSC | | Location ID | STP-12 | | | STP-12 | | | STP-13 | | | STP-13 | | | STP-14 | | | STP-14 | | | STP-15 | | | STP-15 | | |
|---|---|---|---|---|---|---|---|---|---|---|---|---|---|---|---|---|---|---|---|---|---|---|---|---|---|---|---|---|
| | | | | Sample ID | 034-STP-12_1.5-2.0' | | | 035-STP-12_7.5-8.0' | | | 003-STP-13_1.5-2.0 | | | 004-STP-13_9.5-10 | | | 012-STP-14_1.5-2.0 | | | 013-STP-14_11.5-12 | | | 036-STP-15_1.5-2.0' | | | 037-STP-15_8.5-9.0' | | |
| | | | | Sample Date | 11/01/07 | | | 11/01/07 | | | 10/30/07 | | | 10/30/07 | | | 10/31/07 | | | 10/31/07 | | | 11/01/07 | | | 11/01/07 | | |
| | | | | Depth to GW | 8.00 | | | 8.00 | | | 10.00 | | | 10.00 | | | 12.00 | | | 12.00 | | | 9.00 | | | 9.00 | | |
| | | 0-2 ft Surface Soil | 2-15 ft Sub-Surface Soil | Start Depth (ft) | 1.50 | | | 7.50 | | | 1.50 | | | 9.50 | | | 1.50 | | | 11.50 | | | 1.50 | | | 8.50 | | |
| | | | | End Depth (ft) | 2.00 | | | 8.00 | | | 2.00 | | | 10.00 | | | 2.00 | | | 12.00 | | | 2.00 | | | 9.00 | | |
| **TCL Volatiles** | | | | Units | Result | Q | RL | Result | Q | RL | Result | Q | RL | Result | Q | RL | Result | Q | RL | Result | Q | RL | Result | Q | RL | Result | Q | RL |
| Acetone | 67-64-1 | 10,000,000 | 10,000,000 | ug/kg | ND | | 22 | 3000 | J B | 5600 | ND | | 20 | ND | | 25 | ND | | 20 | 7.8 | J | 21 | ND | | 24 | ND | | 24 |
| Benzene | 71-43-2 | 210,000 | 240,000 | ug/kg | ND | | 5.5 | ND | | 1400 | ND | | 5.1 | ND | | 6.2 | ND | | 5 | ND | | 5.4 | ND | | 6 | ND | | 5.9 |
| Bromodichloromethane | 75-27-4 | 45,000 | 51,000 | ug/kg | ND | | 5.5 | ND | | 1400 | ND | | 5.1 | ND | | 6.2 | ND | | 5 | ND | | 5.4 | ND | | 6 | ND | | 5.9 |
| Bromoform | 75-25-2 | 1,500,000 | 1,700,000 | ug/kg | ND | | 5.5 | ND | | 1400 | ND | | 5.1 | ND | | 6.2 | ND | | 5 | ND | | 5.4 | ND | | 6 | ND | | 5.9 |
| Bromomethane | 74-83-9 | 270,000 | 300,000 | ug/kg | ND | | 5.5 | ND | | 1400 | ND | | 5.1 | ND | | 6.2 | ND | | 5 | ND | | 5.4 | ND | | 6 | ND | | 5.9 |
| 2-Butanone | 78-93-3 | 10,000,000 | 10,000,000 | ug/kg | ND | | 5.5 | ND | | 1400 | ND | | 5.1 | ND | | 6.2 | ND | | 5 | ND | | 5.4 | ND | | 6 | ND | | 5.9 |
| Carbon Disulfide | 75-15-0 | 10,000,000 | 10,000,000 | ug/kg | ND | | 5.5 | ND | | 1400 | ND | | 5.1 | ND | | 6.2 | ND | | 5 | ND | | 5.4 | ND | | 6 | ND | | 5.9 |
| Carbon Tetrachloride | 56-23-5 | 110,000 | 120,000 | ug/kg | ND | | 5.5 | ND | | 1400 | ND | | 5.1 | ND | | 6.2 | ND | | 5 | ND | | 5.4 | ND | | 6 | ND | | 5.9 |
| Chlorobenzene | 108-90-7 | 10,000,000 | 10,000,000 | ug/kg | ND | | 5.5 | ND | | 1400 | ND | | 5.1 | ND | | 6.2 | ND | | 5 | ND | | 5.4 | ND | | 6 | ND | | 5.9 |
| Chloroethane | 75-00-3 | 10,000,000 | 10,000,000 | ug/kg | ND | | 5.5 | ND | | 1400 | ND | | 5.1 | ND | | 6.2 | ND | | 5 | ND | | 5.4 | ND | | 6 | ND | | 5.9 |
| Chloroform | 67-66-3 | 17,000 | 19,000 | ug/kg | ND | | 5.5 | ND | | 1400 | ND | | 5.1 | ND | | 6.2 | ND | | 5 | ND | | 5.4 | ND | | 6 | ND | | 5.9 |
| Chloromethane | 74-87-3 | 920,000 | 1,000,000 | ug/kg | ND | | 5.5 | ND | | 1400 | ND | | 5.1 | ND | | 6.2 | ND | | 5 | ND | | 5.4 | ND | | 6 | ND | | 5.9 |
| Isopropylbenzene | 98-82-8 | 10,000,000 | 10,000,000 | ug/kg | ND | | 5.5 | 21000 | | 1400 | ND | | 5.1 | ND | | 6.2 | ND | | 5 | ND | | 5.4 | ND | | 6 | ND | | 5.9 |
| Cyclohexane | 110-82-7 | 100,000 | 100,000 | ug/kg | ND | | 5.5 | ND | | 1400 | ND | | 5.1 | ND | | 6.2 | ND | | 5 | ND | | 5.4 | ND | | 6 | ND | | 5.9 |
| 1,2-Dibromoethane | 106-93-4 | 930 | 8,600 | ug/kg | ND | | 5.5 | ND | | 1400 | ND | | 5.1 | ND | | 6.2 | ND | | 5 | ND | | 5.4 | ND | | 6 | ND | | 5.9 |
| 1,2-Dibromo-3-chloropropane | 96-12-8 | 11,000 | 12,000 | ug/kg | ND | | 5.5 | ND | | 1400 | ND | | 5.1 | ND | | 6.2 | ND | | 5 | ND | | 5.4 | ND | | 6 | ND | | 5.9 |
| Dibromochloromethane | 124-48-1 | 61,000 | 70,000 | ug/kg | ND | | 5.5 | ND | | 1400 | ND | | 5.1 | ND | | 6.2 | ND | | 5 | ND | | 5.4 | ND | | 6 | ND | | 5.9 |
| 1,4-Dichlorobenzene | 106-46-7 | 3,300,000 | 190,000,000 | ug/kg | ND | | 5.5 | ND | | 1400 | ND | | 5.1 | ND | | 6.2 | ND | | 5 | ND | | 5.4 | ND | | 6 | ND | | 5.9 |
| 1,2-Dichlorobenzene | 95-50-1 | 10,000,000 | 10,000,000 | ug/kg | ND | | 5.5 | ND | | 1400 | ND | | 5.1 | ND | | 6.2 | ND | | 5 | ND | | 5.4 | ND | | 6 | ND | | 5.9 |
| 1,3-Dichlorobenzene | 541-73-1 | 10,000,000 | 10,000,000 | ug/kg | ND | | 5.5 | ND | | 1400 | ND | | 5.1 | ND | | 6.2 | ND | | 5 | ND | | 5.4 | ND | | 6 | ND | | 5.9 |
| Dichlorodifluoromethane | 75-71-8 | 10,000,000 | 10,000,000 | ug/kg | ND | | 5.5 | ND | | 1400 | ND | | 5.1 | ND | | 6.2 | ND | | 5 | ND | | 5.4 | ND | | 6 | ND | | 5.9 |
| 1,1-Dichloroethane | 75-34-3 | 1,000,000 | 1,200,000 | ug/kg | ND | | 5.5 | ND | | 1400 | ND | | 5.1 | ND | | 6.2 | ND | | 5 | ND | | 5.4 | ND | | 6 | ND | | 5.9 |
| 1,2-Dichloroethane | 107-06-2 | 63,000 | 73,000 | ug/kg | ND | | 5.5 | ND | | 1400 | ND | | 5.1 | ND | | 6.2 | ND | | 5 | ND | | 5.4 | ND | | 6 | ND | | 5.9 |
| trans-1,2-Dichloroethene | 156-60-5 | 3,700,000 | 4,300,000 | ug/kg | ND | | 5.5 | ND | | 1400 | ND | | 5.1 | ND | | 6.2 | ND | | 5 | ND | | 5.4 | ND | | 6 | ND | | 5.9 |
| cis-1,2-Dichloroethene | 156-59-2 | 1,900,000 | 2,100,000 | ug/kg | ND | | 5.5 | ND | | 1400 | ND | | 5.1 | ND | | 6.2 | ND | | 5 | ND | | 5.4 | ND | | 6 | ND | | 5.9 |
| 1,1-Dichloroethene | 75-35-4 | 33,000 | 38,000 | ug/kg | ND | | 5.5 | ND | | 1400 | ND | | 5.1 | ND | | 6.2 | ND | | 5 | ND | | 5.4 | ND | | 6 | ND | | 5.9 |
| 1,2-Dichloropropane | 78-87-5 | 160,000 | 180,000 | ug/kg | ND | | 5.5 | ND | | 1400 | ND | | 5.1 | ND | | 6.2 | ND | | 5 | ND | | 5.4 | ND | | 6 | ND | | 5.9 |
| trans-1,3-Dichloropropene[1] | 10061-02-6 | 410,000 | 470,000 | ug/kg | ND | | 5.5 | ND | | 1400 | ND | | 5.1 | ND | | 6.2 | ND | | 5 | ND | | 5.4 | ND | | 6 | ND | | 5.9 |
| cis-1,3-Dichloropropene | 10061-01-5 | 410,000 | 470,000 | ug/kg | ND | | 5.5 | ND | | 1400 | ND | | 5.1 | ND | | 6.2 | ND | | 5 | ND | | 5.4 | ND | | 6 | ND | | 5.9 |
| Ethylbenzene | 100-41-4 | 10,000,000 | 10,000,000 | ug/kg | ND | | 5.5 | 760 | J | 1400 | ND | | 5.1 | ND | | 6.2 | ND | | 5 | ND | | 5.4 | ND | | 6 | ND | | 5.9 |
| 2-Hexanone | 591-78-6 | 100,000 | 100,000 | ug/kg | ND | | 5.5 | ND | | 1400 | ND | | 5.1 | ND | | 6.2 | ND | | 5 | ND | | 5.4 | ND | | 6 | ND | | 5.9 |
| Methyl Acetate | 79-20-9 | 10,000,000 | 10,000,000 | ug/kg | ND | | 5.5 | ND | | 1400 | ND | | 5.1 | ND | | 6.2 | ND | | 5 | ND | | 5.4 | ND | | 6 | ND | | 5.9 |
| Methyl tert-Butyl Ether | 1634-04-4 | 3,200,000 | 3,700,000 | ug/kg | ND | | 5.5 | ND | | 1400 | ND | | 5.1 | ND | | 6.2 | ND | | 5 | ND | | 5.4 | ND | | 6 | ND | | 5.9 |
| 4-Methyl-2-pentanone | 108-10-1 | 4,300,000 | 4,900,000 | ug/kg | ND | | 5.5 | ND | | 1400 | ND | | 5.1 | ND | | 6.2 | ND | | 5 | ND | | 5.4 | ND | | 6 | ND | | 5.9 |
| Methylcyclohexane | 108-87-2 | NS | NS | ug/kg | ND | | 5.5 | 430 | J | 1400 | ND | | 5.1 | ND | | 6.2 | ND | | 5 | ND | | 5.4 | ND | | 6 | ND | | 5.9 |
| Methylene Chloride | 75-09-2 | 3,500,000 | 4,000,000 | ug/kg | 0.87 | J | 5.5 | ND | | 1400 | 2.5 | J B | 5.1 | 1.8 | J B | 6.2 | 1.3 | J | 5 | 1 | J | 5.4 | ND | | 6 | ND | | 5.9 |
| Styrene | 100-42-5 | 1,000,000 | 1,000,000 | ug/kg | ND | | 5.5 | ND | | 1400 | ND | | 5.1 | ND | | 6.2 | ND | | 5 | ND | | 5.4 | ND | | 6 | ND | | 5.9 |
| 1,1,2,2-Tetrachloroethane | 79-34-5 | 28,000 | 33,000 | ug/kg | ND | | 5.5 | ND | | 1400 | ND | | 5.1 | ND | | 6.2 | ND | | 5 | ND | | 5.4 | ND | | 6 | ND | | 5.9 |
| Tetrachloroethene | 127-18-4 | 1,500,000 | 3,300,000 | ug/kg | ND | | 5.5 | ND | | 1400 | ND | | 5.1 | ND | | 6.2 | ND | | 5 | ND | | 5.4 | ND | | 6 | ND | | 5.9 |
| Toluene | 108-88-3 | 10,000,000 | 10,000,000 | ug/kg | ND | | 5.5 | ND | | 1400 | ND | | 5.1 | ND | | 6.2 | ND | | 5 | ND | | 5.4 | ND | | 6 | ND | | 5.9 |
| Xylenes (Total) | 1330-20-7 | 10,000,000 | 10,000,000 | ug/kg | ND | | 16 | 3500 | J | 4200 | ND | | 15 | ND | | 19 | ND | | 15 | ND | | 16 | ND | | 18 | ND | | 18 |
| 1,1,2-Trichloro-1,2,2-trifluoroethane | 76-13-1 | 190,000,000 | 190,000,000 | ug/kg | ND | | 5.5 | ND | | 1400 | ND | | 5.1 | ND | | 6.2 | ND | | 5 | ND | | 5.4 | ND | | 6 | ND | | 5.9 |
| 1,2,4-Trichlorobenzene | 120-82-1 | 10,000,000 | 10,000,000 | ug/kg | ND | | 5.5 | ND | | 1400 | ND | | 5.1 | ND | | 6.2 | ND | | 5 | ND | | 5.4 | ND | | 6 | ND | | 5.9 |
| 1,1,1-Trichloroethane | 71-55-6 | 10,000,000 | 10,000,000 | ug/kg | ND | | 5.5 | ND | | 1400 | ND | | 5.1 | ND | | 6.2 | ND | | 5 | ND | | 5.4 | ND | | 6 | ND | | 5.9 |
| 1,1,2-Trichloroethane | 79-00-5 | 100,000 | 120,000 | ug/kg | ND | | 5.5 | ND | | 1400 | ND | | 5.1 | ND | | 6.2 | ND | | 5 | ND | | 5.4 | ND | | 6 | ND | | 5.9 |
| Trichloroethene | 79-01-6 | 970,000 | 1,100,000 | ug/kg | ND | | 5.5 | ND | | 1400 | ND | | 5.1 | ND | | 6.2 | ND | | 5 | ND | | 5.4 | ND | | 6 | ND | | 5.9 |
| Trichlorofluoromethane | 75-69-4 | 10,000,000 | 10,000,000 | ug/kg | ND | | 5.5 | ND | | 1400 | ND | | 5.1 | ND | | 6.2 | ND | | 5 | ND | | 5.4 | ND | | 6 | ND | | 5.9 |
| Vinyl Chloride | 75-01-4 | 53,000 | 220,000 | ug/kg | ND | | 5.5 | ND | | 1400 | ND | | 5.1 | ND | | 6.2 | ND | | 5 | ND | | 5.4 | ND | | 6 | ND | | 5.9 |

# Table 2
## Summary of Soil Analytical Results
## Comparison to Pennsylvania Non-Residential Statewide Health Direct Contact Soil MSCs
## U. S. Steel - Proposed Samax 14.2-Acre Parcel
## Fairless Hills, Pennsylvania

| | CAS No. | PADEP Non-Residential Direct Contact Non-Use Aquifer MSC | | Location ID | STP-12 | | | STP-12 | | | STP-13 | | | STP-13 | | | STP-14 | | | STP-14 | | | STP-15 | | | STP-15 | | |
|---|---|---|---|---|---|---|---|---|---|---|---|---|---|---|---|---|---|---|---|---|---|---|---|---|---|---|---|---|
| | | | | Sample ID | 034-STP-12_1.5-2.0' | | | 035-STP-12_7.5-8.0' | | | 003-STP-13_1.5-2.0 | | | 004-STP-13_9.5-10 | | | 012-STP-14_1.5-2.0 | | | 013-STP-14_11.5-12 | | | 036-STP-15_1.5-2.0' | | | 037-STP-15_8.5-9.0' | | |
| | | | | Sample Date | 11/01/07 | | | 11/01/07 | | | 10/30/07 | | | 10/30/07 | | | 10/31/07 | | | 10/31/07 | | | 11/01/07 | | | 11/01/07 | | |
| | | | | Depth to GW | 8.00 | | | 8.00 | | | 10.00 | | | 10.00 | | | 12.00 | | | 12.00 | | | 9.00 | | | 9.00 | | |
| | | 0-2 ft Surface Soil | 2-15 ft Sub-Surface Soil | Start Depth (ft) | 1.50 | | | 7.50 | | | 1.50 | | | 9.50 | | | 1.50 | | | 11.50 | | | 1.50 | | | 8.50 | | |
| | | | | End Depth (ft) | 2.00 | | | 8.00 | | | 2.00 | | | 10.00 | | | 2.00 | | | 12.00 | | | 2.00 | | | 9.00 | | |
| **TCL Semivolatiles** | | | | Units | Result | Q | RL | Result | Q | RL | Result | Q | RL | Result | Q | RL | Result | Q | RL | Result | Q | RL | Result | Q | RL | Result | Q | RL |
| Acenaphthene | 83-32-9 | 170,000,000 | 190,000,000 | ug/kg | ND | | 7.4 | ND | | 1500 | 81 | | 74 | 55 | | 7.2 | ND | | 7.5 | ND | | 7.2 | ND | | 7.8 | ND | | 7.4 |
| Acenaphthylene | 208-96-8 | 170,000,000 | 190,000,000 | ug/kg | 2.3 | J | 7.4 | ND | | 1500 | 91 | | 74 | 7.1 | J | 7.2 | ND | | 7.5 | ND | | 7.2 | ND | | 7.8 | ND | | 7.4 |
| Acetophenone | 98-86-2 | 10,000,000 | 10,000,000 | ug/kg | ND | | 36 | ND | | 7400 | ND | | 360 | ND | | 35 | ND | | 37 | ND | | 35 | ND | | 39 | ND | | 36 |
| Anthracene | 120-12-7 | 190,000,000 | 190,000,000 | ug/kg | ND | | 7.4 | ND | | 1500 | 280 | | 74 | 94 | | 7.2 | ND | | 7.5 | ND | | 7.2 | ND | | 7.8 | ND | | 7.4 |
| Atrazine[a] | 1912-24-9 | 360,000 | 190,000,000 | ug/kg | ND | | 36 | ND | | 7400 | ND | | 360 | ND | | 35 | ND | | 37 | ND | | 35 | ND | | 39 | ND | | 36 |
| Benzaldehyde | 100-52-7 | NS | NS | ug/kg | ND | | 36 | ND | | 7400 | ND | | 360 | ND | | 35 | ND | | 37 | ND | | 35 | ND | | 39 | ND | | 36 |
| Benzo(a)anthracene | 56-55-3 | 110,000 | 190,000,000 | ug/kg | 6.6 | J | 7.4 | ND | | 1500 | 1800 | | 74 | 350 | | 7.2 | 2.8 | J | 7.5 | ND | | 7.2 | ND | | 7.8 | ND | | 7.4 |
| Benzo(a)pyrene | 50-32-8 | 11,000 | 190,000,000 | ug/kg | 10 | | 7.4 | ND | | 1500 | 1900 | | 74 | 270 | | 7.2 | 3.1 | J | 7.5 | ND | | 7.2 | ND | | 7.8 | ND | | 7.4 |
| Benzo(b)fluoranthene | 205-99-2 | 110,000 | 190,000,000 | ug/kg | 11 | | 7.4 | ND | | 1500 | 2600 | | 74 | 370 | | 7.2 | 4.5 | J | 7.5 | ND | | 7.2 | ND | | 7.8 | ND | | 7.4 |
| Benzo(g,h,i)perylene | 191-24-2 | 170,000,000 | 190,000,000 | ug/kg | 9.7 | | 7.4 | ND | | 1500 | 1400 | | 74 | 150 | | 7.2 | 1.8 | J | 7.5 | ND | | 7.2 | ND | | 7.8 | ND | | 7.4 |
| Benzo(k)fluoranthene | 207-08-9 | 1,100,000 | 190,000,000 | ug/kg | 6.5 | J | 7.4 | ND | | 1500 | 1000 | | 74 | 140 | | 7.2 | 1.5 | J | 7.5 | ND | | 7.2 | ND | | 7.8 | ND | | 7.4 |
| 1,1'-Biphenyl | 92-52-4 | 140,000,000 | 190,000,000 | ug/kg | ND | | 36 | ND | | 7400 | ND | | 360 | 7.8 | J | 35 | ND | | 37 | ND | | 35 | ND | | 39 | ND | | 36 |
| bis(2-Chloroethoxy) methane[a] | 111-91-1 | 100,000 | 100,000 | ug/kg | ND | | 36 | ND | | 7400 | ND | | 360 | ND | | 35 | ND | | 37 | ND | | 35 | ND | | 39 | ND | | 36 |
| bis(2-Chloroethyl) ether | 111-44-4 | 5,000 | 5,700 | ug/kg | ND | | 7.4 | ND | | 1500 | ND | | 74 | ND | | 7.2 | ND | | 7.5 | ND | | 7.2 | ND | | 7.8 | ND | | 7.4 |
| 2,2'-oxybis(1-Chloropropane) | 108-60-1 | 160,000 | 190,000 | ug/kg | ND | | 7.4 | ND | | 1500 | ND | | 74 | ND | | 7.2 | ND | | 7.5 | ND | | 7.2 | ND | | 7.8 | ND | | 7.4 |
| bis-(2-Ethylhexyl)phthalate | 117-81-7 | 5,700,000 | 10,000,000 | ug/kg | 7.9 | J | 36 | ND | | 7400 | ND | | 360 | 110 | | 35 | 15 | J | 37 | ND | | 35 | 18 | J | 39 | ND | | 36 |
| 4-Bromophenyl-phenylether[a] | 101-55-3 | 100,000 | 100,000 | ug/kg | ND | | 36 | ND | | 7400 | ND | | 360 | ND | | 35 | ND | | 37 | ND | | 35 | ND | | 39 | ND | | 36 |
| Butylbenzylphthalate | 85-68-7 | 10,000,000 | 10,000,000 | ug/kg | 7.1 | J | 36 | ND | | 7400 | ND | | 360 | 5.6 | J | 35 | ND | | 37 | 3.6 | J | 35 | ND | | 39 | 11 | J | 36 |
| Caprolactam | 105-60-2 | NS | NS | ug/kg | ND | | 36 | ND | | 7400 | ND | | 360 | ND | | 35 | ND | | 37 | 7.9 | J | 35 | ND | | 39 | ND | | 36 |
| Carbazole | 86-74-8 | 4,000,000 | 190,000,000 | ug/kg | ND | | 7.4 | ND | | 1500 | 300 | | 74 | 68 | | 7.2 | ND | | 7.5 | ND | | 7.2 | ND | | 7.8 | ND | | 7.4 |
| 4-Chloro-3-methylphenol | 59-50-7 | 14,000,000 | 190,000,000 | ug/kg | ND | | 36 | ND | | 7400 | ND | | 360 | ND | | 35 | ND | | 37 | ND | | 35 | ND | | 39 | ND | | 36 |
| 4-Chloroaniline | 106-47-8 | 11,000,000 | 190,000,000 | ug/kg | ND | | 36 | ND | | 7400 | ND | | 360 | ND | | 35 | ND | | 37 | ND | | 35 | ND | | 39 | ND | | 36 |
| 2-Chloronaphthalene | 91-58-7 | 190,000,000 | 190,000,000 | ug/kg | ND | | 7.4 | ND | | 1500 | ND | | 74 | ND | | 7.2 | ND | | 7.5 | ND | | 7.2 | ND | | 7.8 | ND | | 7.4 |
| 2-Chlorophenol | 95-57-8 | 920,000 | 1,100,000 | ug/kg | ND | | 36 | ND | | 7400 | ND | | 360 | ND | | 35 | ND | | 37 | ND | | 35 | ND | | 39 | ND | | 36 |
| 4-Chlorophenyl-phenylether[a] | 7005-72-3 | 100,000 | 100,000 | ug/kg | ND | | 36 | ND | | 7400 | ND | | 360 | ND | | 35 | ND | | 37 | ND | | 35 | ND | | 39 | ND | | 36 |
| Chrysene | 218-01-9 | 11,000,000 | 190,000,000 | ug/kg | 12 | | 7.4 | ND | | 1500 | 2100 | | 74 | 400 | | 7.2 | 3.3 | J | 7.5 | ND | | 7.2 | ND | | 7.8 | ND | | 7.4 |
| 2-Methylphenol | 95-48-7 | 10,000,000 | 10,000,000 | ug/kg | ND | | 36 | ND | | 7400 | ND | | 360 | ND | | 35 | ND | | 37 | ND | | 35 | ND | | 39 | ND | | 36 |
| 4-Methylphenol | 106-44-5 | 14,000,000 | 190,000,000 | ug/kg | ND | | 36 | ND | | 7400 | ND | | 360 | ND | | 35 | ND | | 37 | ND | | 35 | ND | | 39 | ND | | 36 |
| Dibenzo(a,h)anthracene | 53-70-3 | 11,000 | 190,000,000 | ug/kg | ND | | 7.4 | ND | | 1500 | 330 | | 74 | 41 | | 7.2 | ND | | 7.5 | ND | | 7.2 | ND | | 7.8 | ND | | 7.4 |
| Dibenzofuran[a] | 132-64-9 | 100,000 | 100,000 | ug/kg | ND | | 36 | ND | | 7400 | 45 | J | 360 | 40 | | 35 | ND | | 37 | ND | | 35 | ND | | 39 | ND | | 36 |
| 3,3'-Dichlorobenzidine | 91-94-1 | 180,000 | 190,000,000 | ug/kg | ND | | 36 | ND | | 7400 | ND | | 360 | ND | | 35 | ND | | 37 | ND | | 35 | ND | | 39 | ND | | 36 |
| 2,4-Dichlorophenol | 120-83-2 | 8,400,000 | 190,000,000 | ug/kg | ND | | 7.4 | ND | | 1500 | ND | | 74 | ND | | 7.2 | ND | | 7.5 | ND | | 7.2 | ND | | 7.8 | ND | | 7.4 |
| Diethylphthalate | 84-66-2 | 10,000,000 | 10,000,000 | ug/kg | ND | | 36 | ND | | 7400 | ND | | 360 | ND | | 35 | ND | | 37 | ND | | 35 | ND | | 39 | ND | | 36 |
| 2,4-Dimethylphenol | 105-67-9 | 10,000,000 | 10,000,000 | ug/kg | ND | | 36 | ND | | 7400 | ND | | 360 | ND | | 35 | ND | | 37 | ND | | 35 | ND | | 39 | ND | | 36 |
| Dimethylphthalate[a] | 131-11-3 | 100,000 | 100,000 | ug/kg | ND | | 36 | ND | | 7400 | ND | | 360 | ND | | 35 | ND | | 37 | ND | | 35 | ND | | 39 | ND | | 36 |
| Di-n-butylphthalate | 84-74-2 | 10,000,000 | 10,000,000 | ug/kg | 8.3 | J | 36 | ND | | 7400 | ND | | 360 | 18 | J | 35 | 16 | J | 37 | ND | | 35 | 10 | J | 39 | 10 | J | 36 |
| 4,6-Dinitro-2-methylphenol[a,g] | 534-52-1 | 100,000 | 100,000 | ug/kg | ND | | 190 | ND | | 38000 | ND | | 1900 | ND | | 180 | ND | | 190 | ND | | 180 | ND | | 200 | ND | | 190 |
| 2,4-Dinitrophenol | 51-28-5 | 5,600,000 | 190,000,000 | ug/kg | ND | | 190 | ND | | 38000 | ND | | 1900 | ND | | 180 | ND | | 190 | ND | | 180 | ND | | 200 | ND | | 190 |
| 2,4-Dinitrotoluene | 121-14-2 | 260,000 | 190,000,000 | ug/kg | ND | | 36 | ND | | 7400 | ND | | 360 | ND | | 35 | ND | | 37 | ND | | 35 | ND | | 39 | ND | | 36 |
| 2,6-Dinitrotoluene | 606-20-2 | 2,800,000 | 190,000,000 | ug/kg | ND | | 36 | ND | | 7400 | ND | | 360 | ND | | 35 | ND | | 37 | ND | | 35 | ND | | 39 | ND | | 36 |
| Fluoranthene | 206-44-0 | 110,000,000 | 190,000,000 | ug/kg | 22 | | 7.4 | ND | | 1500 | 5100 | | 74 | 710 | | 7.2 | 6.9 | J | 7.5 | ND | | 7.2 | 3.1 | J | 7.8 | ND | | 7.4 |
| Fluorene | 86-73-7 | 110,000,000 | 190,000,000 | ug/kg | ND | | 7.4 | ND | | 1500 | 81 | | 74 | 75 | | 7.2 | ND | | 7.5 | ND | | 7.2 | ND | | 7.8 | ND | | 7.4 |
| Hexachlorobenzene | 118-74-1 | 50,000 | 190,000,000 | ug/kg | ND | | 7.4 | ND | | 1500 | ND | | 74 | ND | | 7.2 | ND | | 7.5 | ND | | 7.2 | ND | | 7.8 | ND | | 7.4 |
| Hexachlorobutadiene | 87-68-3 | 560,000 | 10,000,000 | ug/kg | ND | | 7.4 | ND | | 1500 | ND | | 74 | ND | | 7.2 | ND | | 7.5 | ND | | 7.2 | ND | | 7.8 | ND | | 7.4 |
| Hexachlorocyclopentadiene | 77-47-4 | 10,000,000 | 10,000,000 | ug/kg | ND | | 36 | ND | | 7400 | ND | | 360 | ND | | 35 | ND | | 37 | ND | | 35 | ND | | 39 | ND | | 36 |
| Hexachloroethane | 67-72-1 | 2,800,000 | 190,000,000 | ug/kg | ND | | 36 | ND | | 7400 | ND | | 360 | ND | | 35 | ND | | 37 | ND | | 35 | ND | | 39 | ND | | 36 |
| Indeno(1,2,3-cd)pyrene | 193-39-5 | 110,000 | 190,000,000 | ug/kg | 4.8 | J | 7.4 | ND | | 1500 | 1300 | | 74 | 140 | | 7.2 | 1.8 | J | 7.5 | ND | | 7.2 | ND | | 7.8 | ND | | 7.4 |
| Isophorone | 78-59-1 | 10,000,000 | 10,000,000 | ug/kg | ND | | 36 | ND | | 7400 | 380 | | 360 | ND | | 35 | ND | | 37 | ND | | 35 | ND | | 39 | ND | | 36 |
| 2-Methylnaphthalene | 91-57-6 | 10,000,000 | 10,000,000 | ug/kg | ND | | 7.4 | 30000 | | 1500 | ND | | 74 | 11 | | 7.2 | ND | | 7.5 | ND | | 7.2 | 5 | J | 7.8 | 2.5 | J | 7.4 |
| Naphthalene | 91-20-3 | 56,000,000 | 190,000,000 | ug/kg | 4.2 | J | 7.4 | 210000 | | 1500 | 24 | J | 74 | 24 | | 7.2 | ND | | 7.5 | ND | | 7.2 | 35 | | 7.8 | 15 | | 7.4 |
| 2-Nitroaniline[a] | 88-74-4 | 160,000 | 190,000,000 | ug/kg | ND | | 190 | ND | | 38000 | ND | | 1900 | ND | | 180 | ND | | 190 | ND | | 180 | ND | | 200 | ND | | 190 |
| 3-Nitroaniline[a] | 99-09-2 | 160,000 | 190,000,000 | ug/kg | ND | | 190 | ND | | 38000 | ND | | 1900 | ND | | 180 | ND | | 190 | ND | | 180 | ND | | 200 | ND | | 190 |
| 4-Nitroaniline[a] | 100-01-6 | 160,000 | 190,000,000 | ug/kg | ND | | 190 | ND | | 38000 | ND | | 1900 | ND | | 180 | ND | | 190 | ND | | 0.18 | ND | | 200 | ND | | 190 |
| Nitrobenzene | 98-95-3 | 1,400,000 | 10,000,000 | ug/kg | ND | | 7.4 | ND | | 1500 | ND | | 74 | ND | | 7.2 | ND | | 7.5 | ND | | 7.2 | ND | | 7.8 | ND | | 7.4 |
| 2-Nitrophenol | 88-75-5 | 22,000,000 | 190,000,000 | ug/kg | ND | | 36 | ND | | 7400 | ND | | 360 | ND | | 35 | ND | | 37 | ND | | 35 | ND | | 39 | ND | | 36 |
| 4-Nitrophenol | 100-02-7 | 22,000,000 | 190,000,000 | ug/kg | ND | | 190 | ND | | 38000 | ND | | 1900 | ND | | 180 | ND | | 190 | ND | | 180 | ND | | 200 | ND | | 190 |
| N-Nitrosodi-n-propylamine | 621-64-7 | 11,000 | 10,000,000 | ug/kg | ND | | 7.4 | ND | | 1500 | ND | | 74 | ND | | 7.2 | ND | | 7.5 | ND | | 7.2 | ND | | 7.8 | ND | | 7.4 |
| N-Nitrosodiphenylamine | 86-30-6 | 10,000,000 | 10,000,000 | ug/kg | ND | | 7.4 | ND | | 1500 | ND | | 74 | ND | | 7.2 | ND | | 7.5 | ND | | 7.2 | ND | | 7.8 | ND | | 7.4 |
| Di-n-octylphthalate | 117-84-0 | 10,000,000 | 10,000,000 | ug/kg | ND | | 36 | ND | | 7400 | ND | | 360 | ND | | 35 | ND | | 37 | ND | | 35 | ND | | 39 | ND | | 36 |
| Pentachlorophenol | 87-86-5 | 660,000 | 190,000,000 | ug/kg | ND | | 36 | ND | | 7400 | ND | | 360 | ND | | 35 | ND | | 37 | ND | | 35 | ND | | 39 | ND | | 36 |
| Phenanthrene | 85-01-8 | 190,000,000 | 190,000,000 | ug/kg | 11 | | 7.4 | ND | | 1500 | 2100 | | 74 | 410 | | 7.2 | 5.6 | J | 7.5 | 2.6 | J | 7.2 | 4.3 | J | 7.8 | 3.8 | J | 7.4 |
| Phenol | 108-95-2 | 190,000,000 | 190,000,000 | ug/kg | ND | | 7.4 | ND | | 1500 | ND | | 74 | ND | | 7.2 | ND | | 7.5 | ND | | 7.2 | ND | | 7.8 | ND | | 7.4 |
| Pyrene | 129-00-0 | 84,000,000 | 190,000,000 | ug/kg | 19 | | 7.4 | ND | | 1500 | 3600 | | 74 | 520 | | 7.2 | 5.4 | J | 7.5 | ND | | 7.2 | ND | | 7.8 | ND | | 7.4 |
| 2,4,5-Trichlorophenol | 95-95-4 | 190,000,000 | 190,000,000 | ug/kg | ND | | 36 | ND | | 7400 | ND | | 360 | ND | | 35 | ND | | 37 | ND | | 35 | ND | | 39 | ND | | 36 |
| 2,4,6-Trichlorophenol | 88-06-2 | 840,000 | 190,000,000 | ug/kg | ND | | 36 | ND | | 7400 | ND | | 360 | ND | | 35 | ND | | 37 | ND | | 35 | ND | | 39 | ND | | 36 |

# Table 2
## Summary of Soil Analytical Results
## Comparison to Pennsylvania Non-Residential Statewide Health Direct Contact Soil MSCs
## U. S. Steel - Proposed Samax 14.2-Acre Parcel
## Fairless Hills, Pennsylvania

| | CAS No. | PADEP Non-Residential Direct Contact Non-Use Aquifer MSC | | Location ID | STP-12 | | | STP-12 | | | STP-13 | | | STP-13 | | | STP-14 | | | STP-14 | | | STP-15 | | | STP-15 | | |
|---|---|---|---|---|---|---|---|---|---|---|---|---|---|---|---|---|---|---|---|---|---|---|---|---|---|---|---|---|
| | | | | Sample ID | 034-STP-12_1.5-2.0' | | | 035-STP-12_7.5-8.0' | | | 003-STP-13_1.5-2.0 | | | 004-STP-13_9.5-10 | | | 012-STP-14_1.5-2.0 | | | 013-STP-14_11.5-12 | | | 036-STP-15_1.5-2.0' | | | 037-STP-15_8.5-9.0' | | |
| | | | | Sample Date | 11/01/07 | | | 11/01/07 | | | 10/30/07 | | | 10/30/07 | | | 10/31/07 | | | 10/31/07 | | | 11/01/07 | | | 11/01/07 | | |
| | | | | Depth to GW | 8.00 | | | 8.00 | | | 10.00 | | | 10.00 | | | 12.00 | | | 12.00 | | | 9.00 | | | 9.00 | | |
| | | 0-2 ft Surface Soil | 2-15 ft Sub-Surface Soil | Start Depth (ft) | 1.50 | | | 7.50 | | | 1.50 | | | 9.50 | | | 1.50 | | | 11.50 | | | 1.50 | | | 8.50 | | |
| | | | | End Depth (ft) | 2.00 | | | 8.00 | | | 2.00 | | | 10.00 | | | 2.00 | | | 12.00 | | | 2.00 | | | 9.00 | | |
| **PCB (ug/kg)** | | | | **Units** | **Result** | **Q** | **RL** | **Result** | **Q** | **RL** | **Result** | **Q** | **RL** | **Result** | **Q** | **RL** | **Result** | **Q** | **RL** | **Result** | **Q** | **RL** | **Result** | **Q** | **RL** | **Result** | **Q** | **RL** |
| Aroclor 1016 | 12674-11-2 | 200,000 | 10,000,000 | ug/kg | ND | | 36 | 110 | | 37 | ND | | 36 | ND | | 36 | ND | | 37 | ND | | 36 | ND | | 39 | ND | | 36 |
| Aroclor 1221 | 11104-28-2 | 160,000 | 10,000,000 | ug/kg | ND | | 36 | ND | | 37 | ND | | 36 | ND | | 36 | ND | | 37 | ND | | 36 | ND | | 39 | ND | | 36 |
| Aroclor 1232 | 11141-16-5 | 160,000 | 10,000,000 | ug/kg | ND | | 36 | ND | | 37 | ND | | 36 | ND | | 36 | ND | | 37 | ND | | 36 | ND | | 39 | ND | | 36 |
| Aroclor 1242 | 53469-21-9 | 160,000 | 10,000,000 | ug/kg | ND | | 36 | ND | | 37 | ND | | 36 | ND | | 36 | ND | | 37 | ND | | 36 | ND | | 39 | ND | | 36 |
| Aroclor 1248 | 12672-29-6 | 44,000 | 10,000,000 | ug/kg | ND | | 36 | ND | | 37 | ND | | 36 | ND | | 36 | ND | | 37 | ND | | 36 | ND | | 39 | ND | | 36 |
| Aroclor 1254 | 11097-69-1 | 44,000 | 10,000,000 | ug/kg | ND | | 36 | 1100 | | 37 | 130 | | 36 | 35 | J | 36 | 1700 | | 37 | ND | | 36 | ND | | 39 | ND | | 36 |
| Aroclor 1260 | 11096-82-5 | 130,000 | 190,000,000 | ug/kg | ND | | 36 | ND | | 37 | ND | | 36 | ND | | 36 | ND | | 37 | ND | | 36 | ND | | 39 | ND | | 36 |
| **PP Metals (mg/kg)** | | | | **Units** | **Result** | **Q** | **RL** | **Result** | **Q** | **RL** | **Result** | **Q** | **RL** | **Result** | **Q** | **RL** | **Result** | **Q** | **RL** | **Result** | **Q** | **RL** | **Result** | **Q** | **RL** | **Result** | **Q** | **RL** |
| Antimony | 7440-36-0 | 1,100 | 190,000 | mg/kg | 0.021 | B | 0.22 | 0.037 | B | 0.23 | 0.021 | B | 0.22 | 0.056 | B | 0.22 | 0.042 | B | 0.22 | 0.059 | B | 0.22 | 0.027 | B | 0.23 | 0.012 | B | 0.22 |
| Arsenic | 7440-38-2 | 53 | 190,000 | mg/kg | 3.8 | | 0.11 | 1.7 | | 0.11 | 7 | | 0.11 | 5.6 | | 0.11 | 4.4 | J | 0.11 | 3.3 | J | 0.11 | 3.6 | | 0.12 | 1.9 | | 0.11 |
| Beryllium | 7440-41-7 | 190,000 | 190,000 | mg/kg | 0.38 | | 0.11 | 0.25 | | 0.11 | 0.48 | | 0.11 | 1.4 | | 0.11 | 0.38 | | 0.11 | 0.41 | | 0.11 | 0.3 | | 0.12 | 0.22 | | 0.11 |
| Cadmium | 7440-43-9 | 210 | 190,000 | mg/kg | 0.12 | | 0.11 | 0.097 | B | 0.11 | 0.19 | | 0.11 | 0.13 | | 0.11 | 0.069 | B | 0.11 | 0.094 | B | 0.11 | 0.061 | B | 0.12 | 0.057 | B | 0.11 |
| Chromium[2] | 7440-47-3 | 190,000 | 190,000 | mg/kg | 10.8 | | 0.22 | 12.6 | | 0.23 | 11.7 | J | 0.22 | 34.5 | J | 0.22 | 8.9 | J | 0.22 | 8.3 | J | 0.22 | 7.6 | | 0.23 | 5.9 | | 0.22 |
| Copper | 7440-50-8 | 100,000 | 190,000 | mg/kg | 13 | J | 0.22 | 8.8 | J | 0.23 | 15.3 | J | 0.22 | 27.3 | J | 0.22 | 11 | | 0.22 | 10.5 | | 0.22 | 11.2 | J | 0.23 | 7.9 | J | 0.22 |
| Lead | 7439-92-1 | 1,000 | 190,000 | mg/kg | 9.6 | | 0.11 | 4.2 | | 0.11 | 15.2 | | 0.11 | 15.6 | | 0.11 | 8.4 | | 0.11 | 7.4 | | 0.11 | 6.5 | | 0.12 | 4.1 | | 0.11 |
| Mercury | 7439-97-6 | 840 | 190,000 | mg/kg | 0.019 | B | 0.036 | 0.01 | B | 0.037 | 0.035 | B | 0.036 | 0.0083 | B | 0.036 | 0.03 | B | 0.037 | 0.0092 | B | 0.036 | 0.027 | B | 0.039 | 0.0093 | B | 0.036 |
| Nickel | 7440-02-0 | 56,000 | 190000 | mg/kg | 13.6 | | 0.11 | 7.9 | | 0.11 | 12.2 | | 0.11 | 22.4 | | 0.11 | 12.3 | J | 0.11 | 11.1 | J | 0.11 | 12.6 | | 0.12 | 9.6 | | 0.11 |
| Selenium | 7782-49-2 | 14,000 | 190,000 | mg/kg | 0.24 | B | 0.55 | 0.19 | B | 0.56 | 0.68 | J | 0.55 | 0.79 | J | 0.54 | 0.47 | B | 0.56 | 0.38 | B | 0.54 | 0.17 | B | 0.59 | 0.096 | B | 0.55 |
| Silver | 7440-22-4 | 14,000 | 190000 | mg/kg | 0.015 | B | 0.11 | 0.011 | B | 0.11 | 0.0073 | B | 0.11 | 0.029 | B | 0.11 | ND | | 0.11 | ND | | 0.11 | 0.011 | B | 0.12 | 0.008 | B | 0.11 |
| Thallium | 7440-28-0 | 200 | 190000 | mg/kg | 0.066 | B | 0.11 | 0.031 | B | 0.11 | 0.086 | B J | 0.11 | 0.47 | J | 0.11 | 0.076 | B | 0.11 | 0.07 | B | 0.11 | 0.055 | B | 0.12 | 0.031 | B | 0.11 |
| Zinc | 7440-66-6 | 190,000 | 190,000 | mg/kg | 33.4 | J | 0.55 | 26.9 | J | 0.56 | 38.6 | J | 0.55 | 53.1 | J | 0.54 | 28.8 | J | 0.56 | 27.1 | J | 0.54 | 28.8 | J | 0.59 | 22.7 | J | 0.55 |
| **General Chemistry** | | | | **Units** | **Result** | **Q** | **RL** | **Result** | **Q** | **RL** | **Result** | **Q** | **RL** | **Result** | **Q** | **RL** | **Result** | **Q** | **RL** | **Result** | **Q** | **RL** | **Result** | **Q** | **RL** | **Result** | **Q** | **RL** |
| Percent Solids | none | NS | NS | percent | 90.5 | - | - | 88.6 | - | - | 90.7 | | | 92.2 | | | 88.9 | | | 92.1 | | | 85.4 | | | 91 | | |

Laboratory Qualifiers:

Organic Qualifiers:

B = Analyte was detected in the method blank.

J = Estimated Result. Result is less than RL.

Inorganic Qualifiers:

J = Estimated Result. Result is less than RL.

B = Analyte was detected in the method blank.

Notes:

PADEP = Pensylvannia Department of Environmental Protection

MSC = PADEP's Medium Specific Concentration for surface and subsurface soil.

RL = Reporting Limit.

NS = No Act 2 Remediation Standard.

Q = Laboratory Qualifier

ND = Not Detetected at concentrations above the laboratory reporting limit.

ug/kg =microgram per kilogram.

mg/kg =milligram per kilogram.

1. MSC listed for cis-1,3-Dichloropropene aNDtrans-1,3-Dichloropropene is based on the MSC for 1,3-Dichloropropene (Total).
2. Chromium III was used as the most stringent chromium standard.

# Table 2
## Summary of Soil Analytical Results
## Comparison to Pennsylvania Non-Residential Statewide Health Direct Contact Soil MSCs
## U. S. Steel - Proposed Samax 14.2-Acre Parcel
## Fairless Hills, Pennsylvania

| | CAS No. | PADEP Non-Residential Direct Contact Non-Use Aquifer MSC | | Location ID | 016-FB-2-103107 | | | 007-FB-1_103007 | | | 031-FB-3_110107 | | | 011-TB-1-103107 | | | 027-TB-2_103007 | | | 038-TB-3_110107 | | |
|---|---|---|---|---|---|---|---|---|---|---|---|---|---|---|---|---|---|---|---|---|---|---|
| | | | | Sample ID | C7K010229-005 | | | C7J310198-007 | | | C7K020245-004 | | | C7J310198-011 | | | C7K010229-016 | | | C7K020245-011 | | |
| | | | | Sample Date | 10/31/07 | | | 10/30/07 | | | 10/30/07 | | | 10/31/07 | | | 10/30/07 | | | 10/30/07 | | |
| | | | | Depth to GW | WATER | | | WATER | | | WATER | | | WATER | | | WATER | | | WATER | | |
| | | 0-2 ft Surface Soil | 2-15 ft Sub-Surface | Start Depth (ft) | 1.00 | | | 1.00 | | | 1.00 | | | 1.00 | | | 1.00 | | | 1.00 | | |
| | | | | End Depth (ft) | ug/L | | | ug/L | | | ug/L | | | ug/L | | | ug/L | | | ug/L | | |
| **TCL Volatiles** | | | | **Units** | **Result** | **Q** | **RL** | **Result** | **Q** | **RL** | **Result** | **Q** | **RL** | **Result** | **Q** | **RL** | **Result** | **Q** | **RL** | **Result** | **Q** | **RL** |
| Acetone | 67-64-1 | 10,000,000 | 10,000,000 | ug/kg | ND | | 5 | 3.2 | J | 5 | 2.8 | J | 5 | 3.3 | J | 5 | ND | | 5 | ND | | 5 |
| Benzene | 71-43-2 | 210,000 | 240,000 | ug/kg | ND | | 1 | ND | | 1 | ND | | 1 | ND | | 1 | ND | | 1 | ND | | 1 |
| Bromodichloromethane | 75-27-4 | 45,000 | 51,000 | ug/kg | ND | | 1 | ND | | 1 | ND | | 1 | ND | | 1 | ND | | 1 | ND | | 1 |
| Bromoform | 75-25-2 | 1,500,000 | 1,700,000 | ug/kg | ND | | 1 | ND | | 1 | ND | | 1 | ND | | 1 | ND | | 1 | ND | | 1 |
| Bromomethane | 74-83-9 | 270,000 | 300,000 | ug/kg | ND | | 1 | ND | | 1 | ND | | 1 | ND | | 1 | ND | | 1 | ND | | 1 |
| 2-Butanone | 78-93-3 | 10,000,000 | 10,000,000 | ug/kg | ND | | 5 | ND | | 5 | ND | | 5 | ND | | 5 | ND | | 5 | ND | | 5 |
| Carbon Disulfide | 75-15-0 | 10,000,000 | 10,000,000 | ug/kg | ND | | 1 | ND | | 1 | ND | | 1 | ND | | 1 | ND | | 1 | ND | | 1 |
| Carbon Tetrachloride | 56-23-5 | 110,000 | 120,000 | ug/kg | ND | | 1 | ND | | 1 | ND | | 1 | ND | | 1 | ND | | 1 | ND | | 1 |
| Chlorobenzene | 108-90-7 | 10,000,000 | 10,000,000 | ug/kg | ND | | 1 | ND | | 1 | ND | | 1 | ND | | 1 | ND | | 1 | ND | | 1 |
| Chloroethane | 75-00-3 | 10,000,000 | 10,000,000 | ug/kg | ND | | 1 | ND | | 1 | ND | | 1 | ND | | 1 | ND | | 1 | ND | | 1 |
| Chloroform | 67-66-3 | 17,000 | 19,000 | ug/kg | ND | | 1 | ND | | 1 | ND | | 1 | ND | | 1 | ND | | 1 | ND | | 1 |
| Chloromethane | 74-87-3 | 920,000 | 1,000,000 | ug/kg | 0.46 | J | 1 | ND | | 1 | ND | | 1 | ND | | 1 | ND | | 1 | ND | | 1 |
| Isopropylbenzene | 98-82-8 | 10,000,000 | 10,000,000 | ug/kg | ND | | 1 | ND | | 1 | ND | | 1 | ND | | 1 | ND | | 1 | ND | | 1 |
| Cyclohexane | 110-82-7 | 100,000 | 100,000 | ug/kg | ND | | 1 | ND | | 1 | ND | | 1 | ND | | 1 | ND | | 1 | ND | | 1 |
| 1,2-Dibromoethane | 106-93-4 | 930 | 8,600 | ug/kg | ND | | 1 | ND | | 1 | ND | | 1 | ND | | 1 | ND | | 1 | ND | | 1 |
| 1,2-Dibromo-3-chloropropane | 96-12-8 | 11,000 | 12,000 | ug/kg | ND | | 1 | ND | | 1 | ND | | 1 | ND | | 1 | ND | | 1 | ND | | 1 |
| Dibromochloromethane | 124-48-1 | 61,000 | 70,000 | ug/kg | ND | | 1 | ND | | 1 | ND | | 1 | ND | | 1 | ND | | 1 | ND | | 1 |
| 1,4-Dichlorobenzene | 106-46-7 | 3,300,000 | 190,000,000 | ug/kg | ND | | 1 | ND | | 1 | ND | | 1 | ND | | 1 | ND | | 1 | ND | | 1 |
| 1,2-Dichlorobenzene | 95-50-1 | 10,000,000 | 10,000,000 | ug/kg | ND | | 1 | ND | | 1 | ND | | 1 | ND | | 1 | ND | | 1 | ND | | 1 |
| 1,3-Dichlorobenzene | 541-73-1 | 10,000,000 | 10,000,000 | ug/kg | ND | | 1 | ND | | 1 | ND | | 1 | ND | | 1 | ND | | 1 | ND | | 1 |
| Dichlorodifluoromethane | 75-71-8 | 10,000,000 | 10,000,000 | ug/kg | ND | | 1 | ND | | 1 | ND | | 1 | ND | | 1 | ND | | 1 | ND | | 1 |
| 1,1-Dichloroethane | 75-34-3 | 1,000,000 | 1,200,000 | ug/kg | ND | | 1 | ND | | 1 | ND | | 1 | ND | | 1 | ND | | 1 | ND | | 1 |
| 1,2-Dichloroethane | 107-06-2 | 63,000 | 73,000 | ug/kg | ND | | 1 | ND | | 1 | ND | | 1 | ND | | 1 | ND | | 1 | ND | | 1 |
| trans-1,2-Dichloroethene | 156-60-5 | 3,700,000 | 4,300,000 | ug/kg | ND | | 1 | ND | | 1 | ND | | 1 | ND | | 1 | ND | | 1 | ND | | 1 |
| cis-1,2-Dichloroethene | 156-59-2 | 1,900,000 | 2,100,000 | ug/kg | ND | | 1 | ND | | 1 | ND | | 1 | ND | | 1 | ND | | 1 | ND | | 1 |
| 1,1-Dichloroethene | 75-35-4 | 33,000 | 38,000 | ug/kg | ND | | 1 | ND | | 1 | ND | | 1 | ND | | 1 | ND | | 1 | ND | | 1 |
| 1,2-Dichloropropane | 78-87-5 | 160,000 | 180,000 | ug/kg | ND | | 1 | ND | | 1 | ND | | 1 | ND | | 1 | ND | | 1 | ND | | 1 |
| trans-1,3-Dichloropropene[1] | 10061-02-6 | 410,000 | 470,000 | ug/kg | ND | | 1 | ND | | 1 | ND | | 1 | ND | | 1 | ND | | 1 | ND | | 1 |
| cis-1,3-Dichloropropene | 10061-01-5 | 410,000 | 470,000 | ug/kg | ND | | 1 | ND | | 1 | ND | | 1 | ND | | 1 | ND | | 1 | ND | | 1 |
| Ethylbenzene | 100-41-4 | 10,000,000 | 10,000,000 | ug/kg | ND | | 1 | ND | | 1 | ND | | 1 | ND | | 1 | ND | | 1 | ND | | 1 |
| 2-Hexanone | 591-78-6 | 100,000 | 100,000 | ug/kg | ND | | 5 | ND | | 5 | ND | | 5 | ND | | 5 | ND | | 5 | ND | | 5 |
| Methyl Acetate | 79-20-9 | 10,000,000 | 10,000,000 | ug/kg | ND | | 1 | ND | | 1 | ND | | 1 | ND | | 1 | ND | | 1 | ND | | 1 |
| Methyl tert-Butyl Ether | 1634-04-4 | 3,200,000 | 3,700,000 | ug/kg | ND | | 1 | ND | | 1 | ND | | 1 | ND | | 1 | ND | | 1 | ND | | 1 |
| 4-Methyl-2-pentanone | 108-10-1 | 4,300,000 | 4,900,000 | ug/kg | ND | | 5 | ND | | 5 | ND | | 5 | ND | | 5 | ND | | 5 | ND | | 5 |
| Methylcyclohexane | 108-87-2 | NS | NS | ug/kg | ND | | 1 | ND | | 1 | ND | | 1 | ND | | 1 | ND | | 1 | ND | | 1 |
| Methylene Chloride | 75-09-2 | 3,500,000 | 4,000,000 | ug/kg | ND | | 1 | 0.27 | J | 1 | 0.28 | J,B | 1 | 1 | | 1 | ND | | 1 | 0.51 | J,B | 1 |
| Styrene | 100-42-5 | 1,000,000 | 1,000,000 | ug/kg | ND | | 1 | ND | | 1 | ND | | 1 | ND | | 1 | ND | | 1 | ND | | 1 |
| 1,1,2,2-Tetrachloroethane | 79-34-5 | 28,000 | 33,000 | ug/kg | ND | | 1 | ND | | 1 | ND | | 1 | ND | | 1 | ND | | 1 | ND | | 1 |
| Tetrachloroethene | 127-18-4 | 1,500,000 | 3,300,000 | ug/kg | ND | | 1 | ND | | 1 | ND | | 1 | ND | | 1 | ND | | 1 | ND | | 1 |
| Toluene | 108-88-3 | 10,000,000 | 10,000,000 | ug/kg | ND | | 1 | ND | | 1 | ND | | 1 | ND | | 1 | ND | | 1 | ND | | 1 |
| Xylenes (Total) | 1330-20-7 | 10,000,000 | 10,000,000 | ug/kg | ND | | 3 | ND | | 3 | ND | | 3 | ND | | 3 | ND | | 3 | ND | | 3 |
| 1,1,2-Trichloro-1,2,2-trifluoroethane | 76-13-1 | 190,000,000 | 190,000,000 | ug/kg | ND | | 1 | ND | | 1 | ND | | 1 | ND | | 1 | ND | | 1 | ND | | 1 |
| 1,2,4-Trichlorobenzene | 120-82-1 | 10,000,000 | 10,000,000 | ug/kg | ND | | 1 | ND | | 1 | ND | | 1 | ND | | 1 | ND | | 1 | ND | | 1 |
| 1,1,1-Trichloroethane | 71-55-6 | 10,000,000 | 10,000,000 | ug/kg | ND | | 1 | ND | | 1 | ND | | 1 | ND | | 1 | ND | | 1 | ND | | 1 |
| 1,1,2-Trichloroethane | 79-00-5 | 100,000 | 120,000 | ug/kg | ND | | 1 | ND | | 1 | ND | | 1 | ND | | 1 | ND | | 1 | ND | | 1 |
| Trichloroethene | 79-01-6 | 970,000 | 1,100,000 | ug/kg | ND | | 1 | ND | | 1 | ND | | 1 | ND | | 1 | ND | | 1 | ND | | 1 |
| Trichlorofluoromethane | 75-69-4 | 10,000,000 | 10,000,000 | ug/kg | ND | | 1 | ND | | 1 | ND | | 1 | ND | | 1 | ND | | 1 | ND | | 1 |
| Vinyl Chloride | 75-01-4 | 53,000 | 220,000 | ug/kg | ND | | 1 | ND | | 1 | ND | | 1 | ND | | 1 | ND | | 1 | ND | | 1 |

# Table 2
## Summary of Soil Analytical Results
## Comparison to Pennsylvania Non-Residential Statewide Health Direct Contact Soil MSCs
## U. S. Steel - Proposed Samax 14.2-Acre Parcel
## Fairless Hills, Pennsylvania

| | CAS No. | PADEP Non-Residential Direct Contact Non-Use Aquifer MSC | | Location ID | 016-FB-2-103107 | | | 007-FB-1_103007 | | | 031-FB-3_110107 | | | 011-TB-1-103107 | | | 027-TB-2_103007 | | | 038-TB-3_110107 | | |
|---|---|---|---|---|---|---|---|---|---|---|---|---|---|---|---|---|---|---|---|---|---|---|
| | | | | Sample ID | C7K010229-005 | | | C7J310198-007 | | | C7K020245-004 | | | C7J310198-011 | | | C7K010229-016 | | | C7K020245-011 | | |
| | | | | Sample Date | 10/31/07 | | | 10/30/07 | | | 10/30/07 | | | 10/31/07 | | | 10/30/07 | | | 10/30/07 | | |
| | | | | Depth to GW | WATER | | | WATER | | | WATER | | | WATER | | | WATER | | | WATER | | |
| | | 0-2 ft Surface Soil | 2-15 ft Sub-Surface | Start Depth (ft) | 1.00 | | | 1.00 | | | 1.00 | | | 1.00 | | | 1.00 | | | 1.00 | | |
| | | | | End Depth (ft) | ug/L | | | ug/L | | | ug/L | | | ug/L | | | ug/L | | | ug/L | | |
| **TCL Semivolatiles** | | | | Units | Result | Q | RL | Result | Q | RL | Result | Q | RL | Result | Q | RL | Result | Q | RL | Result | Q | RL |
| Acenaphthene | 83-32-9 | 170,000,000 | 190,000,000 | ug/kg | ND | | 0.19 | ND | | 0.19 | ND | | 0.19 | - | | - | - | | - | - | | - |
| Acenaphthylene | 208-96-8 | 170,000,000 | 190,000,000 | ug/kg | ND | | 0.19 | ND | | 0.19 | ND | | 0.19 | - | | - | - | | - | - | | - |
| Acetaphenone | 98-86-2 | 10,000,000 | 10,000,000 | ug/kg | ND | | 0.96 | ND | | 0.95 | ND | | 0.95 | - | | - | - | | - | - | | - |
| Anthracene | 120-12-7 | 190,000,000 | 190,000,000 | ug/kg | ND | | 0.19 | ND | | 0.19 | ND | | 0.19 | - | | - | - | | - | - | | - |
| Atrazine[2] | 1912-24-9 | 360,000 | 190,000,000 | ug/kg | ND | | 0.96 | ND | | 0.95 | ND | | 0.95 | - | | - | - | | - | - | | - |
| Benzaldehyde | 100-52-7 | NS | NS | ug/kg | ND | | 0.96 | ND | | 0.95 | ND | | 0.95 | - | | - | - | | - | - | | - |
| Benzo(a)anthracene | 56-55-3 | 110,000 | 190,000,000 | ug/kg | ND | | 0.19 | ND | | 0.19 | ND | | 0.19 | - | | - | - | | - | - | | - |
| Benzo(a)pyrene | 50-32-8 | 11,000 | 190,000,000 | ug/kg | ND | | 0.19 | ND | | 0.19 | ND | | 0.19 | - | | - | - | | - | - | | - |
| Benzo(b)fluoranthene | 205-99-2 | 110,000 | 190,000,000 | ug/kg | ND | | 0.19 | ND | | 0.19 | ND | | 0.19 | - | | - | - | | - | - | | - |
| Benzo(g,h,i)perylene | 191-24-2 | 170,000,000 | 190,000,000 | ug/kg | ND | | 0.19 | ND | | 0.19 | ND | | 0.19 | - | | - | - | | - | - | | - |
| Benzo(k)fluoranthene | 207-08-9 | 1,100,000 | 190,000,000 | ug/kg | ND | | 0.19 | ND | | 0.19 | ND | | 0.19 | - | | - | - | | - | - | | - |
| 1,1'-Biphenyl | 92-52-4 | 140,000,000 | 190,000,000 | ug/kg | ND | | 0.96 | ND | | 0.95 | ND | | 0.95 | - | | - | - | | - | - | | - |
| bis(2-Chloroethoxy) methane[3] | 111-91-1 | 100,000 | 100,000 | ug/kg | ND | | 0.96 | ND | | 0.95 | ND | | 0.95 | - | | - | - | | - | - | | - |
| bis(2-Chloroethyl) ether | 111-44-4 | 5,000 | 5,700 | ug/kg | ND | | 0.19 | ND | | 0.19 | ND | | 0.19 | - | | - | - | | - | - | | - |
| 2,2'-oxybis(1-Chloropropane) | 108-60-1 | 160,000 | 190,000 | ug/kg | ND | | 0.19 | ND | | 0.19 | ND | | 0.19 | - | | - | - | | - | - | | - |
| bis-(2-Ethylhexyl)phthalate | 117-81-7 | 5,700,000 | 10,000,000 | ug/kg | ND | | 0.96 | ND | | 0.95 | 0.17 | J | 0.95 | - | | - | - | | - | - | | - |
| 4-Bromophenyl-phenylether[3] | 101-55-3 | 100,000 | 100,000 | ug/kg | ND | | 0.96 | ND | | 0.95 | ND | | 0.95 | - | | - | - | | - | - | | - |
| Butylbenzylphthalate | 85-68-7 | 10,000,000 | 10,000,000 | ug/kg | ND | | 0.96 | 0.18 | J | 0.95 | ND | | 0.95 | - | | - | - | | - | - | | - |
| Caprolactam | 105-60-2 | NS | NS | ug/kg | ND | | 0.96 | 0.27 | J | 0.95 | ND | | 0.95 | - | | - | - | | - | - | | - |
| Carbazole | 86-74-8 | 4,000,000 | 190,000,000 | ug/kg | ND | | 0.19 | ND | | 0.19 | ND | | 0.19 | - | | - | - | | - | - | | - |
| 4-Chloro-3-methylphenol | 59-50-7 | 14,000,000 | 190,000,000 | ug/kg | ND | | 0.96 | ND | | 0.95 | ND | | 0.95 | - | | - | - | | - | - | | - |
| 4-Chloroaniline | 106-47-8 | 11,000,000 | 190,000,000 | ug/kg | ND | | 0.96 | ND | | 0.95 | ND | | 0.95 | - | | - | - | | - | - | | - |
| 2-Chloronapthalene | 91-58-7 | 190,000,000 | 190,000,000 | ug/kg | ND | | 0.19 | ND | | 0.19 | ND | | 0.19 | - | | - | - | | - | - | | - |
| 2-Chlorophenol | 95-57-8 | 920,000 | 1,100,000 | ug/kg | ND | | 0.96 | ND | | 0.95 | ND | | 0.95 | - | | - | - | | - | - | | - |
| 4-Chlorophenyl-phenylether[3] | 7005-72-3 | 100,000 | 100,000 | ug/kg | ND | | 0.96 | ND | | 0.95 | ND | | 0.95 | - | | - | - | | - | - | | - |
| Chrysene | 218-01-9 | 11,000,000 | 190,000,000 | ug/kg | ND | | 0.19 | ND | | 0.19 | ND | | 0.19 | - | | - | - | | - | - | | - |
| 2-Methylphenol | 95-48-7 | 10,000,000 | 10,000,000 | ug/kg | ND | | 0.96 | ND | | 0.95 | ND | | 0.95 | - | | - | - | | - | - | | - |
| 4-Methylphenol | 106-44-5 | 14,000,000 | 190,000,000 | ug/kg | ND | | 0.96 | ND | | 0.95 | ND | | 0.95 | - | | - | - | | - | - | | - |
| Dibenzo(a,h)anthracene | 53-70-3 | 11,000 | 190,000,000 | ug/kg | ND | | 0.19 | ND | | 0.19 | ND | | 0.19 | - | | - | - | | - | - | | - |
| Dibenzofuran[3] | 132-64-9 | 100,000 | 100,000 | ug/kg | ND | | 0.96 | ND | | 0.95 | ND | | 0.95 | - | | - | - | | - | - | | - |
| 3,3'-Dichlorobenzidine | 91-94-1 | 180,000 | 190,000,000 | ug/kg | ND | | 0.96 | ND | | 0.95 | ND | | 0.95 | - | | - | - | | - | - | | - |
| 2,4-Dichlorophenol | 120-83-2 | 8,400,000 | 190,000,000 | ug/kg | ND | | 0.19 | ND | | 0.19 | ND | | 0.19 | - | | - | - | | - | - | | - |
| Diethylphthalate | 84-66-2 | 10,000,000 | 10,000,000 | ug/kg | ND | | 0.96 | ND | | 0.95 | ND | | 0.95 | - | | - | - | | - | - | | - |
| 2,4-Dimethylphenol | 105-67-9 | 10,000,000 | 10,000,000 | ug/kg | ND | | 0.96 | ND | | 0.95 | ND | | 0.95 | - | | - | - | | - | - | | - |
| Dimethylphthalate[3] | 131-11-3 | 100,000 | 100,000 | ug/kg | ND | | 0.96 | ND | | 0.95 | ND | | 0.95 | - | | - | - | | - | - | | - |
| Di-n-butylphthalate | 84-74-2 | 10,000,000 | 10,000,000 | ug/kg | ND | | 0.96 | 0.091 | J | 0.95 | ND | | 0.95 | - | | - | - | | - | - | | - |
| 4,6-Dinitro-2-methylphenol[2,3] | 534-52-1 | 100,000 | 100,000 | ug/kg | ND | | 4.8 | ND | | 4.8 | ND | | 4.8 | - | | - | - | | - | - | | - |
| 2,4-Dinitrophenol | 51-28-5 | 5,600,000 | 190,000,000 | ug/kg | ND | | 4.8 | ND | | 4.8 | ND | | 4.8 | - | | - | - | | - | - | | - |
| 2,4-Dinitrotoluene | 121-14-2 | 260,000 | 190,000,000 | ug/kg | ND | | 0.96 | ND | | 0.95 | ND | | 0.95 | - | | - | - | | - | - | | - |
| 2,6-Dinitrotoluene | 606-20-2 | 2,600,000 | 190,000,000 | ug/kg | ND | | 0.96 | ND | | 0.95 | ND | | 0.95 | - | | - | - | | - | - | | - |
| Fluoranthene | 206-44-0 | 110,000,000 | 190,000,000 | ug/kg | ND | | 0.19 | ND | | 0.19 | ND | | 0.19 | - | | - | - | | - | - | | - |
| Fluorene | 86-73-7 | 110,000,000 | 190,000,000 | ug/kg | ND | | 0.19 | ND | | 0.19 | ND | | 0.19 | - | | - | - | | - | - | | - |
| Hexachlorobenzene | 118-74-1 | 50,000 | 190,000,000 | ug/kg | ND | | 0.19 | ND | | 0.19 | ND | | 0.19 | - | | - | - | | - | - | | - |
| Hexachlorobutadiene | 87-68-3 | 560,000 | 10,000,000 | ug/kg | ND | | 0.19 | ND | | 0.19 | ND | | 0.19 | - | | - | - | | - | - | | - |
| Hexachlorocyclopentadiene | 77-47-4 | 10,000,000 | 10,000,000 | ug/kg | ND | | 0.96 | ND | | 0.95 | ND | | 0.95 | - | | - | - | | - | - | | - |
| Hexachloroethane | 67-72-1 | 2,800,000 | 190,000,000 | ug/kg | ND | | 0.96 | ND | | 0.95 | ND | | 0.95 | - | | - | - | | - | - | | - |
| Indeno(1,2,3-cd)pyrene | 193-39-5 | 110,000 | 190,000,000 | ug/kg | ND | | 0.19 | ND | | 0.19 | ND | | 0.19 | - | | - | - | | - | - | | - |
| Isophorone | 78-59-1 | 10,000,000 | 10,000,000 | ug/kg | ND | | 0.96 | ND | | 0.95 | ND | | 0.95 | - | | - | - | | - | - | | - |
| 2-Methylnaphthalene | 91-57-6 | 10,000,000 | 10,000,000 | ug/kg | ND | | 0.19 | ND | | 0.19 | ND | | 0.19 | - | | - | - | | - | - | | - |
| Naphthalene | 91-20-3 | 56,000,000 | 190,000,000 | ug/kg | ND | | 0.19 | ND | | 0.19 | ND | | 0.19 | - | | - | - | | - | - | | - |
| 2-Nitroaniline[3] | 88-74-4 | 160,000 | 190,000,000 | ug/kg | ND | | 4.8 | ND | | 4.8 | ND | | 4.8 | - | | - | - | | - | - | | - |
| 3-Nitroaniline[3] | 99-09-2 | 160,000 | 190,000,000 | ug/kg | ND | | 4.8 | ND | | 4.8 | ND | | 4.8 | - | | - | - | | - | - | | - |
| 4-Nitroaniline[3] | 100-01-6 | 160,000 | 190,000,000 | ug/kg | ND | | 4.8 | ND | | 4.8 | ND | | 4.8 | - | | - | - | | - | - | | - |
| Nitrobenzene | 98-95-3 | 1,400,000 | 10,000,000 | ug/kg | ND | | 0.19 | ND | | 0.19 | ND | | 0.19 | - | | - | - | | - | - | | - |
| 2-Nitrophenol | 88-75-5 | 22,000,000 | 190,000,000 | ug/kg | ND | | 0.96 | ND | | 0.95 | ND | | 0.95 | - | | - | - | | - | - | | - |
| 4-Nitrophenol | 100-02-7 | 22,000,000 | 190,000,000 | ug/kg | ND | | 4.8 | ND | | 4.8 | ND | | 4.8 | - | | - | - | | - | - | | - |
| N-Nitrosodi-n-propylamine | 621-64-7 | 11,000 | 10,000,000 | ug/kg | ND | | 0.19 | ND | | 0.19 | ND | | 0.19 | - | | - | - | | - | - | | - |
| N-Nitrosodiphenylamine | 86-30-6 | 10,000,000 | 10,000,000 | ug/kg | ND | | 0.19 | ND | | 0.19 | ND | | 0.19 | - | | - | - | | - | - | | - |
| Di-n-octylphthalate | 117-84-0 | 10,000,000 | 10,000,000 | ug/kg | ND | | 0.96 | ND | | 0.95 | ND | | 0.95 | - | | - | - | | - | - | | - |
| Pentachlorophenol | 87-86-5 | 660,000 | 190,000,000 | ug/kg | ND | | 0.96 | ND | | 0.95 | ND | | 0.95 | - | | - | - | | - | - | | - |
| Phenanthrene | 85-01-8 | 190,000,000 | 190,000,000 | ug/kg | ND | | 0.19 | 0.085 | J | 0.19 | ND | | 0.19 | - | | - | - | | - | - | | - |
| Phenol | 108-95-2 | 190,000,000 | 190,000,000 | ug/kg | ND | | 0.19 | ND | | 0.19 | ND | | 0.19 | - | | - | - | | - | - | | - |
| Pyrene | 129-00-0 | 84,000,000 | 190,000,000 | ug/kg | ND | | 0.19 | ND | | 0.19 | ND | | 0.19 | - | | - | - | | - | - | | - |
| 2,4,5-Trichlorophenol | 95-95-4 | 190,000,000 | 190,000,000 | ug/kg | ND | | 0.96 | ND | | 0.95 | ND | | 0.95 | - | | - | - | | - | - | | - |
| 2,4,6-Trichlorophenol | 88-06-2 | 840,000 | 190,000,000 | ug/kg | ND | | 0.96 | ND | | 0.95 | ND | | 0.95 | - | | - | - | | - | - | | - |

# Table 2
## Summary of Soil Analytical Results
## Comparison to Pennsylvania Non-Residential Statewide Health Direct Contact Soil MSCs
## U. S. Steel - Proposed Samax 14.2-Acre Parcel
## Fairless Hills, Pennsylvania

| | CAS No. | PADEP Non-Residential Direct Contact Non-Use Aquifer MSC | | Location ID | 016-FB-2-103107 | | | 007-FB-1_103007 | | | 031-FB-3_110107 | | | 011-TB-1-103107 | | | 027-TB-2_103007 | | | 038-TB-3_110107 | | |
|---|---|---|---|---|---|---|---|---|---|---|---|---|---|---|---|---|---|---|---|---|---|---|
| | | | | Sample ID | C7K010229-005 | | | C7J310198-007 | | | C7K020245-004 | | | C7J310198-011 | | | C7K010229-016 | | | C7K020245-011 | | |
| | | | | Sample Date | 10/31/07 | | | 10/30/07 | | | 10/30/07 | | | 10/31/07 | | | 10/30/07 | | | 10/30/07 | | |
| | | | | Depth to GW | WATER | | | WATER | | | WATER | | | WATER | | | WATER | | | WATER | | |
| | | 0-2 ft Surface Soil | 2-15 ft Sub-Surface | Start Depth (ft) | 1.00 | | | 1.00 | | | 1.00 | | | 1.00 | | | 1.00 | | | 1.00 | | |
| | | | | End Depth (ft) | ug/L | | | ug/L | | | ug/L | | | ug/L | | | ug/L | | | ug/L | | |
| **PCB (ug/kg)** | | | | Units | Result | Q | RL | Result | Q | RL | Result | Q | RL | Result | Q | RL | Result | Q | RL | Result | Q | RL |
| Aroclor 1016 | 12674-11-2 | 200,000 | 10,000,000 | ug/kg | ND | | 0.95 | ND | | 0.95 | ND | | 0.95 | - | | - | - | | - | - | | - |
| Aroclor 1221 | 11104-28-2 | 160,000 | 10,000,000 | ug/kg | ND | | 0.95 | ND | | 0.95 | ND | | 0.95 | - | | - | - | | - | - | | - |
| Aroclor 1232 | 11141-16-5 | 160,000 | 10,000,000 | ug/kg | ND | | 0.95 | ND | | 0.95 | ND | | 0.95 | - | | - | - | | - | - | | - |
| Aroclor 1242 | 53469-21-9 | 160,000 | 10,000,000 | ug/kg | ND | | 0.95 | ND | | 0.95 | ND | | 0.95 | - | | - | - | | - | - | | - |
| Aroclor 1248 | 12672-29-6 | 44,000 | 10,000,000 | ug/kg | ND | | 0.95 | ND | | 0.95 | ND | | 0.95 | - | | - | - | | - | - | | - |
| Aroclor 1254 | 11097-69-1 | 44,000 | 10,000,000 | ug/kg | ND | | 0.95 | ND | | 0.95 | ND | | 0.95 | - | | - | - | | - | - | | - |
| Aroclor 1260 | 11096-82-5 | 130,000 | 190,000,000 | ug/kg | ND | | 0.95 | ND | | 0.95 | ND | | 0.95 | - | | - | - | | - | - | | - |
| **PP Metals (mg/kg)** | | | | Units | Result | Q | RL | Result | Q | RL | Result | Q | RL | Result | Q | RL | Result | Q | RL | Result | Q | RL |
| Antimony | 7440-36-0 | 1,100 | 190,000 | mg/kg | ND | | 2 | ND | | 2 | 0.23 | B | 2 | - | | - | - | | - | - | | - |
| Arsenic | 7440-38-2 | 53 | 190,000 | mg/kg | ND | | 1 | ND | | 1 | 0.33 | B J | 1 | - | | - | - | | - | - | | - |
| Beryllium | 7440-41-7 | 190,000 | 190,000 | mg/kg | ND | | 1 | ND | | 1 | ND | | 1 | - | | - | - | | - | - | | - |
| Cadmium | 7440-43-9 | 210 | 190,000 | mg/kg | ND | | 1 | ND | | 1 | ND | | 1 | - | | - | - | | - | - | | - |
| Chromium [III] | 7440-47-3 | 190,000 | 190,000 | mg/kg | 1.6 | B J | 2 | 1.4 | B J | 2 | 1.6 | J | 2 | - | | - | - | | - | - | | - |
| Copper | 7440-50-8 | 100,000 | 190,000 | mg/kg | ND | | 2 | 0.17 | B | 2 | 2.8 | B | 2 | - | | - | - | | - | - | | - |
| Lead | 7439-92-1 | 1,000 | 190,000 | mg/kg | ND | | 1 | ND | | 1 | ND | | 1 | - | | - | - | | - | - | | - |
| Mercury | 7439-97-6 | 840 | 190,000 | mg/kg | ND | | 0.2 | ND | | 0.2 | ND | | 0.2 | - | | - | - | | - | - | | - |
| Nickel | 7440-02-0 | 56,000 | 190000 | mg/kg | ND | | 1 | ND | | 1 | 0.073 | B | 1 | - | | - | - | | - | - | | - |
| Selenium | 7782-49-2 | 14,000 | 190,000 | mg/kg | ND | | 5 | ND | | 5 | ND | | 5 | - | | - | - | | - | - | | - |
| Silver | 7440-22-4 | 14,000 | 190000 | mg/kg | ND | | 1 | ND | | 1 | ND | | 1 | - | | - | - | | - | - | | - |
| Thallium | 7440-28-0 | 200 | 190000 | mg/kg | 0.21 | B | 1 | 0.048 | B | 1 | 0.089 | B | 1 | - | | - | - | | - | - | | - |
| Zinc | 7440-66-6 | 190,000 | 190,000 | mg/kg | ND | | 5 | 0.93 | B | 5 | 1.1 | J | 5 | - | | - | - | | - | - | | - |
| **General Chemistry** | | | | Units | Result | Q | RL | Result | Q | RL | Result | Q | RL | Result | Q | RL | Result | Q | RL | Result | Q | RL |
| Percent Solids | none | NS | NS | percent | NA | | NA | NA | | NA | NA | | NA | - | | - | - | | - | - | | - |

Laboratory Qualifiers:

Organic Qualifiers:

B = Analyte was detected in the method blank.

J = Estimated Result. Result is less than RL.

Inorganic Qualifiers:

B = Estimated Result. Result is less than RL.

J = Analyte was detected in the method blank.

Notes:

PADEP = Pensylvannia Department of Environmental Protection

MSC = PADEP's Medium Specific Concentration for surface and subsurface soil.

RL = Reporting Limit.

NS = No Act 2 Remediation Standard.

NA = Not Analyzed or Not Applicable.

ND = Not Detetected at concentrations above the laboratory reporting limit.

ug/kg = microgram per kilogram

mg/kg = milligram per kilogram.

1. MSC listed for cis-1,3-Dichloropropene aNDtrans-1,3-Dichloropropene is based on the MSC for 1,3-Dichloropropene (Total).
2. Chromium III was used as the most stringent chromium standard.

# Table 3
## Summary of Soil Analytical Results
## Compared to Pennsylvania Non-Residential Non-Use Aquifer Soil to Groundwater MSCs
## U. S. Steel - Proposed Samax 14.2-Acre Parcel
## Fairless Hills, Pennsylvania

| | CAS No. | PADEP Non-Residential Non-Use Aquifer Soil to GW Pathway MSCs | Location ID | STP-1 | | | STP-1 | | | STP-2 | | | STP-2 | | | STP-3 | | | STP-3 | | | STP-3 | | | STP-4 | | | STP-4 | | |
|---|---|---|---|---|---|---|---|---|---|---|---|---|---|---|---|---|---|---|---|---|---|---|---|---|---|---|---|---|---|---|
| | | | Sample ID | 001-STP-1_1.5-2.0 | | | 002-STP-1_10-10.5 | | | 005-STP-2_1.5-2.0 | | | 006-STP-2_10.5-11.0 | | | 008-STP-3_1.5-2.0 | | | 009-DUP-1-103007 | | | 010-STP-3_10.5-11 | | | 014-STP-4_1.5-2.0 | | | 015-STP-4_11.5-12 | | |
| | | | Sample Date | 10/30/07 | | | 10/30/07 | | | 10/30/07 | | | 10/30/07 | | | 10/30/07 | | | 10/30/07 | | | 10/30/07 | | | 10/31/07 | | | 10/31/07 | | |
| | | | Depth to GW | NA | | | NA | | | 11.00 | | | 11.00 | | | 11.00 | | | 11.00 | | | 11.00 | | | 11.00 | | | 11.00 | | |
| | | | Start Depth (ft) | 1.50 | | | 10.00 | | | 1.50 | | | 10.50 | | | 1.50 | | | 1.50 | | | 10.50 | | | 1.50 | | | 11.50 | | |
| | | | End Depth (ft) | 2.00 | | | 10.50 | | | 2.00 | | | 11.00 | | | 2.00 | | | 2.00 | | | 11.00 | | | 2.00 | | | 12.00 | | |
| **TCL Volatiles** | | | **Units** | **Result** | **Q** | **RL** | **Result** | **Q** | **RL** | **Result** | **Q** | **RL** | **Result** | **Q** | **RL** | **Result** | **Q** | **RL** | **Result** | **Q** | **RL** | **Result** | **Q** | **RL** | **Result** | **Q** | **RL** | **Result** | **Q** | **RL** |
| Acetone | 67-64-1 | 10000000 | ug/kg | ND | | 26 | ND | | 22 | ND | | 23 | ND | | 23 | ND | | 22 | ND | | 23 | ND | | 19 | ND | | 20 | ND | | 26 |
| Benzene | 71-43-2 | 50000 | ug/kg | ND | | 6.5 | ND | | 5.5 | ND | | 5.6 | ND | | 5.9 | ND | | 5.6 | ND | | 5.7 | ND | | 4.7 | ND | | 5.1 | ND | | 6.4 |
| Bromodichloromethane | 75-27-4 | 10000 | ug/kg | ND | | 6.5 | ND | | 5.5 | ND | | 5.6 | ND | | 5.9 | ND | | 5.6 | ND | | 5.7 | ND | | 4.7 | ND | | 5.1 | ND | | 6.4 |
| Bromoform | 75-25-2 | 1000000 | ug/kg | ND | | 6.5 | ND | | 5.5 | ND | | 5.6 | ND | | 5.9 | ND | | 5.6 | ND | | 5.7 | ND | | 4.7 | ND | | 5.1 | ND | | 6.4 |
| Bromomethane | 74-83-9 | 100000 | ug/kg | ND | | 6.5 | ND | | 5.5 | ND | | 5.6 | ND | | 5.9 | ND | | 5.6 | ND | | 5.7 | ND | | 4.7 | ND | | 5.1 | ND | | 6.4 |
| 2-Butanone | 78-93-3 | 10000000 | ug/kg | ND | | 6.5 | ND | | 5.5 | ND | | 5.6 | ND | | 5.9 | ND | | 5.6 | ND | | 5.7 | ND | | 4.7 | ND | | 5.1 | ND | | 6.4 |
| Carbon Disulfide | 75-15-0 | 410000 | ug/kg | ND | | 6.5 | ND | | 5.5 | ND | | 5.6 | 4 | J | 5.9 | ND | | 5.6 | ND | | 5.7 | ND | | 4.7 | ND | | 5.1 | ND | | 6.4 |
| Carbon Tetrachloride | 56-23-5 | 5000 | ug/kg | ND | | 6.5 | ND | | 5.5 | ND | | 5.6 | ND | | 5.9 | ND | | 5.6 | ND | | 5.7 | ND | | 4.7 | ND | | 5.1 | ND | | 6.4 |
| Chlorobenzene | 108-90-7 | 1000000 | ug/kg | ND | | 6.5 | ND | | 5.5 | ND | | 5.6 | ND | | 5.9 | ND | | 5.6 | ND | | 5.7 | ND | | 4.7 | ND | | 5.1 | ND | | 6.4 |
| Chloroethane | 75-00-3 | 9000000 | ug/kg | ND | | 6.5 | ND | | 5.5 | ND | | 5.6 | ND | | 5.9 | ND | | 5.6 | ND | | 5.7 | ND | | 4.7 | ND | | 5.1 | ND | | 6.4 |
| Chloroform | 67-66-3 | 100000 | ug/kg | ND | | 6.5 | ND | | 5.5 | ND | | 5.6 | ND | | 5.9 | ND | | 5.6 | ND | | 5.7 | ND | | 4.7 | ND | | 5.1 | ND | | 6.4 |
| Chloromethane | 74-87-3 | 30000 | ug/kg | ND | | 6.5 | ND | | 5.5 | ND | | 5.6 | ND | | 5.9 | ND | | 5.6 | ND | | 5.7 | ND | | 4.7 | ND | | 5.1 | ND | | 6.4 |
| Isopropylbenzene | 98-82-8 | 10000000 | ug/kg | ND | | 6.5 | ND | | 5.5 | ND | | 5.6 | ND | | 5.9 | ND | | 5.6 | ND | | 5.7 | ND | | 4.7 | ND | | 5.1 | ND | | 6.4 |
| Cyclohexane | 110-82-7 | 500 | ug/kg | ND | | 6.5 | ND | | 5.5 | ND | | 5.6 | ND | | 5.9 | ND | | 5.6 | ND | | 5.7 | ND | | 4.7 | ND | | 5.1 | ND | | 6.4 |
| 1,2-Dibromoethane | 106-93-4 | 500 | ug/kg | ND | | 6.5 | ND | | 5.5 | ND | | 5.6 | ND | | 5.9 | ND | | 5.6 | ND | | 5.7 | ND | | 4.7 | ND | | 5.1 | ND | | 6.4 |
| 1,2-Dibromo-3-chloropropane | 96-12-8 | 2000 | ug/kg | ND | | 6.5 | ND | | 5.5 | ND | | 5.6 | ND | | 5.9 | ND | | 5.6 | ND | | 5.7 | ND | | 4.7 | ND | | 5.1 | ND | | 6.4 |
| Dibromochloromethane | 124-48-1 | 1000000 | ug/kg | ND | | 6.5 | ND | | 5.5 | ND | | 5.6 | ND | | 5.9 | ND | | 5.6 | ND | | 5.7 | ND | | 4.7 | ND | | 5.1 | ND | | 6.4 |
| 1,4-Dichlorobenzene | 106-46-7 | 1000000 | ug/kg | ND | | 6.5 | ND | | 5.5 | ND | | 5.6 | ND | | 5.9 | ND | | 5.6 | ND | | 5.7 | ND | | 4.7 | ND | | 5.1 | ND | | 6.4 |
| 1,2-Dichlorobenzene | 95-50-1 | 6000000 | ug/kg | ND | | 6.5 | ND | | 5.5 | ND | | 5.6 | ND | | 5.9 | ND | | 5.6 | ND | | 5.7 | ND | | 4.7 | ND | | 5.1 | ND | | 6.4 |
| 1,3-Dichlorobenzene | 541-73-1 | 6100000 | ug/kg | ND | | 6.5 | ND | | 5.5 | ND | | 5.6 | ND | | 5.9 | ND | | 5.6 | ND | | 5.7 | ND | | 4.7 | ND | | 5.1 | ND | | 6.4 |
| Dichlorodifluoromethane | 75-71-8 | 10000000 | ug/kg | ND | | 6.5 | ND | | 5.5 | ND | | 5.6 | ND | | 5.9 | ND | | 5.6 | ND | | 5.7 | ND | | 4.7 | ND | | 5.1 | ND | | 6.4 |
| 1,1-Dichloroethane | 75-34-3 | 110000 | ug/kg | ND | | 6.5 | ND | | 5.5 | ND | | 5.6 | ND | | 5.9 | ND | | 5.6 | ND | | 5.7 | ND | | 4.7 | ND | | 5.1 | ND | | 6.4 |
| 1,2-Dichloroethane | 107-06-2 | 5000 | ug/kg | ND | | 6.5 | ND | | 5.5 | ND | | 5.6 | ND | | 5.9 | ND | | 5.6 | ND | | 5.7 | ND | | 4.7 | ND | | 5.1 | ND | | 6.4 |
| trans-1,2-Dichloroethene | 156-60-5 | 100000 | ug/kg | ND | | 6.5 | ND | | 5.5 | ND | | 5.6 | ND | | 5.9 | ND | | 5.6 | ND | | 5.7 | ND | | 4.7 | ND | | 5.1 | ND | | 6.4 |
| cis-1,2-Dichloroethene | 156-59-2 | 70000 | ug/kg | ND | | 6.5 | ND | | 5.5 | ND | | 5.6 | ND | | 5.9 | ND | | 5.6 | ND | | 5.7 | ND | | 4.7 | ND | | 5.1 | ND | | 6.4 |
| 1,1-Dichloroethene | 75-35-4 | 7000 | ug/kg | ND | | 6.5 | ND | | 5.5 | ND | | 5.6 | ND | | 5.9 | ND | | 5.6 | ND | | 5.7 | ND | | 4.7 | ND | | 5.1 | ND | | 6.4 |
| 1,2-Dichloropropane | 78-87-5 | 5000 | ug/kg | ND | | 6.5 | ND | | 5.5 | ND | | 5.6 | ND | | 5.9 | ND | | 5.6 | ND | | 5.7 | ND | | 4.7 | ND | | 5.1 | ND | | 6.4 |
| trans-1,3-Dichloropropene | 10061-02-6 | 260000 | ug/kg | ND | | 6.5 | ND | | 5.5 | ND | | 5.6 | ND | | 5.9 | ND | | 5.6 | ND | | 5.7 | ND | | 4.7 | ND | | 5.1 | ND | | 6.4 |
| cis-1,3-Dichloropropene | 10061-01-5 | 260000 | ug/kg | ND | | 6.5 | ND | | 5.5 | ND | | 5.6 | ND | | 5.9 | ND | | 5.6 | ND | | 5.7 | ND | | 4.7 | ND | | 5.1 | ND | | 6.4 |
| Ethylbenzene | 100-41-4 | 7000000 | ug/kg | ND | | 6.5 | ND | | 5.5 | ND | | 5.6 | ND | | 5.9 | ND | | 5.6 | ND | | 5.7 | ND | | 4.7 | ND | | 5.1 | ND | | 6.4 |
| 2-Hexanone | 591-78-6 | 500 | ug/kg | ND | | 6.5 | ND | | 5.5 | ND | | 5.6 | ND | | 5.9 | ND | | 5.6 | ND | | 5.7 | ND | | 4.7 | ND | | 5.1 | ND | | 6.4 |
| Methyl Acetate | 79-20-9 | 10000000 | ug/kg | ND | | 6.5 | ND | | 5.5 | ND | | 5.6 | ND | | 5.9 | ND | | 5.6 | ND | | 5.7 | ND | | 4.7 | ND | | 5.1 | ND | | 6.4 |
| Methyl tert-Butyl Ether | 1634-04-4 | 20000 | ug/kg | ND | | 6.5 | ND | | 5.5 | ND | | 5.6 | ND | | 5.9 | ND | | 5.6 | ND | | 5.7 | ND | | 4.7 | ND | | 5.1 | ND | | 6.4 |
| 4-Methyl-2-pentanone | 108-10-1 | 4100000 | ug/kg | ND | | 6.5 | ND | | 5.5 | ND | | 5.6 | ND | | 5.9 | ND | | 5.6 | ND | | 5.7 | ND | | 4.7 | ND | | 5.1 | ND | | 6.4 |
| Methylcyclohexane | 108-87-2 | NS | ug/kg | ND | | 6.5 | ND | | 5.5 | ND | | 5.6 | ND | | 5.9 | ND | | 5.6 | ND | | 5.7 | ND | | 4.7 | ND | | 5.1 | ND | | 6.4 |
| Methylene Chloride | 75-09-2 | 50000 | ug/kg | 1.8 | J B | 6.5 | 1.9 | J B | 5.5 | 2.5 | J B | 5.6 | 2.6 | J B | 5.9 | 1.7 | J | 5.6 | 1.3 | J | 5.7 | 1 | J | 4.7 | 1.6 | J | 5.1 | 2.1 | J B | 6.4 |
| Styrene | 100-42-5 | 2400000 | ug/kg | ND | | 6.5 | ND | | 5.5 | ND | | 5.6 | ND | | 5.9 | ND | | 5.6 | ND | | 5.7 | ND | | 4.7 | ND | | 5.1 | ND | | 6.4 |
| 1,1,2,2-Tetrachloroethane | 79-34-5 | 3000 | ug/kg | ND | | 6.5 | ND | | 5.5 | ND | | 5.6 | ND | | 5.9 | ND | | 5.6 | ND | | 5.7 | ND | | 4.7 | ND | | 5.1 | ND | | 6.4 |
| Tetrachloroethene | 127-18-4 | 5000 | ug/kg | ND | | 6.5 | ND | | 5.5 | ND | | 5.6 | ND | | 5.9 | ND | | 5.6 | ND | | 5.7 | ND | | 4.7 | ND | | 5.1 | ND | | 6.4 |
| Toluene | 108-88-3 | 10000000 | ug/kg | ND | | 6.5 | ND | | 5.5 | ND | | 5.6 | ND | | 5.9 | ND | | 5.6 | ND | | 5.7 | ND | | 4.7 | ND | | 5.1 | ND | | 6.4 |
| Xylenes (Total) | 1330-20-7 | 10000000 | ug/kg | ND | | 19 | ND | | 16 | ND | | 17 | ND | | 18 | ND | | 17 | ND | | 17 | ND | | 14 | ND | | 15 | ND | | 19 |
| 1,1,2-Trichloro-1,2,2-trifluoroethane | 76-13-1 | 53000000 | ug/kg | ND | | 6.5 | ND | | 5.5 | ND | | 5.6 | ND | | 5.9 | ND | | 5.6 | ND | | 5.7 | ND | | 4.7 | ND | | 5.1 | ND | | 6.4 |
| 1,2,4-Trichlorobenzene | 120-82-1 | 10000000 | ug/kg | ND | | 6.5 | ND | | 5.5 | ND | | 5.6 | ND | | 5.9 | ND | | 5.6 | ND | | 5.7 | ND | | 4.7 | ND | | 5.1 | ND | | 6.4 |
| 1,1,1-Trichloroethane | 71-55-6 | 200000 | ug/kg | ND | | 6.5 | ND | | 5.5 | ND | | 5.6 | ND | | 5.9 | ND | | 5.6 | ND | | 5.7 | ND | | 4.7 | ND | | 5.1 | ND | | 6.4 |
| 1,1,2-Trichloroethane | 79-00-5 | 5000 | ug/kg | ND | | 6.5 | ND | | 5.5 | ND | | 5.6 | ND | | 5.9 | ND | | 5.6 | ND | | 5.7 | ND | | 4.7 | ND | | 5.1 | ND | | 6.4 |
| Trichloroethene | 79-01-6 | 5000 | ug/kg | ND | | 6.5 | ND | | 5.5 | ND | | 5.6 | ND | | 5.9 | ND | | 5.6 | ND | | 5.7 | ND | | 4.7 | ND | | 5.1 | ND | | 6.4 |
| Trichlorofluoromethane | 75-69-4 | 10000000 | ug/kg | ND | | 6.5 | ND | | 5.5 | ND | | 5.6 | ND | | 5.9 | ND | | 5.6 | ND | | 5.7 | ND | | 4.7 | ND | | 5.1 | ND | | 6.4 |
| Vinyl Chloride | 75-01-4 | 2000 | ug/kg | ND | | 6.5 | ND | | 5.5 | ND | | 5.6 | ND | | 5.9 | ND | | 5.6 | ND | | 5.7 | ND | | 4.7 | ND | | 5.1 | ND | | 6.4 |

# Table 3
## Summary of Soil Analytical Results
## Compared to Pennsylvania Non-Residential Non-Use Aquifer Soil to Groundwater MSCs
## U. S. Steel - Proposed Samax 14.2-Acre Parcel
## Fairless Hills, Pennsylvania

| | CAS No. | PADEP Non-Residential Non-Use Aquifer Soil to GW Pathway MSCs | Location ID | STP-1 | | | STP-1 | | | STP-2 | | | STP-2 | | | STP-3 | | | STP-3 | | | STP-3 | | | STP-4 | | | STP-4 | | |
|---|---|---|---|---|---|---|---|---|---|---|---|---|---|---|---|---|---|---|---|---|---|---|---|---|---|---|---|---|---|---|
| | | | Sample ID | 001-STP-1_1.5-2.0 | | | 002-STP-1_10-10.5 | | | 005-STP-2_1.5-2.0 | | | 006-STP-2_10.5-11.0 | | | 008-STP-3_1.5-2.0 | | | 009-DUP-1-103007 | | | 010-STP-3_10.5-11 | | | 014-STP-4_1.5-2.0 | | | 015-STP-4_11.5-12 | | |
| | | | Sample Date | 10/30/07 | | | 10/30/07 | | | 10/30/07 | | | 10/30/07 | | | 10/30/07 | | | 10/30/07 | | | 10/30/07 | | | 10/31/07 | | | 10/31/07 | | |
| | | | Depth to GW | NA | | | NA | | | 11.00 | | | 11.00 | | | 11.00 | | | 11.00 | | | 11.00 | | | 11.00 | | | 11.00 | | |
| | | | Start Depth (ft) | 1.50 | | | 10.00 | | | 1.50 | | | 10.50 | | | 1.50 | | | 1.50 | | | 10.50 | | | 1.50 | | | 11.50 | | |
| | | | End Depth (ft) | 2.00 | | | 10.50 | | | 2.00 | | | 11.00 | | | 2.00 | | | 2.00 | | | 11.00 | | | 2.00 | | | 12.00 | | |
| **TCL Semivolatiles** | | | **Units** | **Result** | **Q** | **RL** | **Result** | **Q** | **RL** | **Result** | **Q** | **RL** | **Result** | **Q** | **RL** | **Result** | **Q** | **RL** | **Result** | **Q** | **RL** | **Result** | **Q** | **RL** | **Result** | **Q** | **RL** | **Result** | **Q** | **RL** |
| Acenaphthene | 83-32-9 | 4700000 | ug/kg | ND | | 6.9 | 13 | | 7.9 | 35 | | 23 | ND | | 7.3 | ND | | 7.8 | ND | | 7.9 | 6.1 | J | 7.5 | ND | | 7.2 | ND | | 7.9 |
| Acenaphthylene | 208-96-8 | 18000000 | ug/kg | ND | | 6.9 | 3.5 | J | 7.9 | 17 | J | 23 | ND | | 7.3 | ND | | 7.8 | ND | | 7.9 | 6.5 | J | 7.5 | ND | | 7.2 | ND | | 7.9 |
| Acetaphenone | 98-86-2 | 1000000 | ug/kg | ND | | 34 | ND | | 39 | ND | | 110 | ND | | 36 | ND | | 39 | ND | | 39 | ND | | 37 | 3.2 | J | 36 | 3 | J | 39 |
| Anthracene | 120-12-7 | 350000 | ug/kg | 2.1 | J | 6.9 | 5.4 | J | 7.9 | 94 | | 23 | ND | | 7.3 | ND | | 7.8 | ND | | 7.9 | 16 | | 7.5 | ND | | 7.2 | ND | | 7.9 |
| Atrazine[1] | 1912-24-9 | 300 | ug/kg | ND | | 34 | ND | | 39 | ND | | 110 | ND | | 36 | ND | | 39 | ND | | 39 | ND | | 37 | ND | | 36 | ND | | 39 |
| Benzaldehyde | 100-52-7 | NS | ug/kg | ND | | 34 | ND | | 39 | ND | | 110 | ND | | 36 | ND | | 39 | ND | | 39 | ND | | 37 | ND | | 36 | ND | | 39 |
| Benzo(a)anthracene | 56-55-3 | 960000 | ug/kg | 13 | | 6.9 | 21 | | 7.9 | 410 | | 23 | ND | | 7.3 | ND | | 7.8 | ND | | 7.9 | 74 | | 7.5 | 1.8 | J | 7.2 | ND | | 7.9 |
| Benzo(a)pyrene | 50-32-8 | 860000 | ug/kg | 15 | | 6.9 | 23 | | 7.9 | 410 | | 23 | ND | | 7.3 | 1.3 | J | 7.8 | 1.6 | J | 7.9 | 99 | | 7.5 | 2.1 | J | 7.2 | ND | | 7.9 |
| Benzo(b)fluoranthene | 205-99-2 | 170000 | ug/kg | 23 | | 6.9 | 34 | | 7.9 | 550 | | 23 | ND | | 7.3 | 2.2 | J | 7.8 | ND | | 7.9 | 140 | | 7.5 | ND | | 7.2 | ND | | 7.9 |
| Benzo(g,h,i)perylene | 191-24-2 | 180000 | ug/kg | 12 | | 6.9 | 12 | | 7.9 | 300 | | 23 | ND | | 7.3 | ND | | 7.8 | 1.4 | J | 7.9 | 86 | | 7.5 | ND | | 7.2 | ND | | 7.9 |
| Benzo(k)fluoranthene | 207-08-9 | 610000 | ug/kg | 6.5 | J | 6.9 | 11 | | 7.9 | 190 | | 23 | ND | | 7.3 | ND | | 7.8 | ND | | 7.9 | 56 | | 7.5 | ND | | 7.2 | ND | | 7.9 |
| 1,1'-Biphenyl | 92-52-4 | 3100000 | ug/kg | 3.1 | J | 34 | ND | | 39 | ND | | 110 | ND | | 36 | ND | | 39 | ND | | 39 | ND | | 37 | ND | | 36 | ND | | 39 |
| bis(2-Chloroethoxy) methane | 111-91-1 | 500 | ug/kg | ND | | 34 | ND | | 39 | ND | | 110 | ND | | 36 | ND | | 39 | ND | | 39 | ND | | 37 | ND | | 36 | ND | | 39 |
| bis(2-Chloroethyl) ether | 111-44-4 | 5500 | ug/kg | ND | | 6.9 | ND | | 7.9 | ND | | 23 | ND | | 7.3 | ND | | 7.8 | ND | | 7.9 | ND | | 7.5 | ND | | 7.2 | ND | | 7.9 |
| 2,2'-oxybis(1-Chloropropane) | 108-60-1 | 3000000 | ug/kg | ND | | 6.9 | ND | | 7.9 | ND | | 23 | ND | | 7.3 | ND | | 7.8 | ND | | 7.9 | ND | | 7.5 | ND | | 7.2 | ND | | 7.9 |
| bis-(2-Ethylhexyl)phthalate | 117-81-7 | 6300000 | ug/kg | 7.6 | J | 34 | ND | | 39 | ND | | 110 | 7.7 | J | 36 | 10 | J | 39 | 13 | J | 39 | ND | | 37 | 5 | J | 36 | ND | | 39 |
| 4-Bromophenyl-phenylether | 101-55-3 | 500 | ug/kg | ND | | 34 | ND | | 39 | ND | | 110 | ND | | 36 | ND | | 39 | ND | | 39 | ND | | 37 | ND | | 36 | ND | | 39 |
| Butylbenzylphthalate | 85-68-7 | 10000000 | ug/kg | 7.6 | J | 34 | 9 | J | 39 | ND | | 110 | ND | | 36 | ND | | 39 | ND | | 39 | ND | | 37 | 3.8 | J | 36 | 6.2 | J | 39 |
| Caprolactam | 105-60-2 | NS | ug/kg | 38 | | 34 | 56 | | 39 | ND | | 110 | 37 | | 36 | 40 | | 39 | 55 | | 39 | 34 | J | 37 | 10 | J | 36 | 13 | J | 39 |
| Carbazole | 86-74-8 | 760000 | ug/kg | 2.2 | J | 6.9 | 5.2 | J | 7.9 | 96 | | 23 | ND | | 7.3 | ND | | 7.8 | ND | | 7.9 | 16 | | 7.5 | ND | | 7.2 | ND | | 7.9 |
| 4-Chloro-3-methylphenol | 59-50-7 | 110000 | ug/kg | ND | | 34 | ND | | 39 | ND | | 110 | ND | | 36 | ND | | 39 | ND | | 39 | ND | | 37 | ND | | 36 | ND | | 39 |
| 4-Chloroaniline | 106-47-8 | 52000 | ug/kg | ND | | 34 | ND | | 39 | ND | | 110 | ND | | 36 | ND | | 39 | ND | | 39 | ND | | 37 | ND | | 36 | ND | | 39 |
| 2-Chloronapthalene | 91-58-7 | 18000000 | ug/kg | ND | | 6.9 | ND | | 7.9 | ND | | 23 | ND | | 7.3 | ND | | 7.8 | ND | | 7.9 | ND | | 7.5 | ND | | 7.2 | ND | | 7.9 |
| 2-Chlorophenol | 95-57-8 | 4400 | ug/kg | ND | | 34 | ND | | 39 | ND | | 110 | ND | | 36 | ND | | 39 | ND | | 39 | ND | | 37 | ND | | 36 | ND | | 39 |
| 4-Chlorophenyl-phenylether | 7005-72-3 | 500 | ug/kg | ND | | 34 | ND | | 39 | ND | | 110 | ND | | 36 | ND | | 39 | ND | | 39 | ND | | 37 | ND | | 36 | ND | | 39 |
| Chrysene | 218-01-9 | 230000 | ug/kg | 18 | | 6.9 | 25 | | 7.9 | 450 | | 23 | ND | | 7.3 | ND | | 7.8 | ND | | 7.9 | 100 | | 7.5 | 2.4 | J | 7.2 | ND | | 7.9 |
| 2-Methylphenol | 95-48-7 | 10000000 | ug/kg | ND | | 34 | ND | | 39 | ND | | 110 | ND | | 36 | ND | | 39 | ND | | 39 | ND | | 37 | ND | | 36 | ND | | 39 |
| 4-Methylphenol | 106-44-5 | 51000000 | ug/kg | ND | | 34 | ND | | 39 | ND | | 110 | ND | | 36 | ND | | 39 | ND | | 39 | ND | | 37 | ND | | 36 | ND | | 39 |
| Dibenzo(a,h)anthracene | 53-70-3 | 270000 | ug/kg | ND | | 6.9 | 4 | J | 7.9 | 68 | | 23 | ND | | 7.3 | ND | | 7.8 | ND | | 7.9 | 17 | | 7.5 | ND | | 7.2 | ND | | 7.9 |
| Dibenzofuran | 132-64-9 | 500 | ug/kg | 2.3 | J | 34 | 5.6 | J | 39 | 21 | J | 110 | 2 | J | 36 | ND | | 39 | 2.1 | J | 39 | 4.5 | J | 37 | ND | | 36 | ND | | 39 |
| 3,3'-Dichlorobenzidine | 91-94-1 | 17000000 | ug/kg | ND | | 34 | ND | | 39 | ND | | 110 | ND | | 36 | ND | | 39 | ND | | 39 | ND | | 37 | ND | | 36 | ND | | 39 |
| 2,4-Dichlorophenol | 120-83-2 | 2000000 | ug/kg | ND | | 6.9 | ND | | 7.9 | ND | | 23 | ND | | 7.3 | ND | | 7.8 | ND | | 7.9 | ND | | 7.5 | ND | | 7.2 | ND | | 7.9 |
| Diethylphthalate | 84-66-2 | 10000000 | ug/kg | ND | | 34 | 4.4 | J | 39 | ND | | 110 | ND | | 36 | ND | | 39 | ND | | 39 | ND | | 37 | ND | | 36 | ND | | 39 |
| 2,4-Dimethylphenol | 105-67-9 | 10000000 | ug/kg | ND | | 34 | ND | | 39 | ND | | 110 | ND | | 36 | ND | | 39 | ND | | 39 | ND | | 37 | ND | | 36 | ND | | 39 |
| Dimethylphthalate | 131-11-3 | 500 | ug/kg | ND | | 34 | ND | | 39 | ND | | 110 | ND | | 36 | ND | | 39 | ND | | 39 | ND | | 37 | ND | | 36 | ND | | 39 |
| Di-n-butylphthalate | 84-74-2 | 10000000 | ug/kg | 16 | J | 34 | 19 | J | 39 | ND | | 110 | 17 | J | 36 | 17 | J | 39 | 21 | J | 39 | 16 | J | 37 | ND | | 36 | ND | | 39 |
| 4,6-Dinitro-2-methylphenol[1] | 534-52-1 | 500 | ug/kg | ND | | 180 | ND | | 200 | ND | | 590 | ND | | 180 | ND | | 200 | ND | | 200 | ND | | 190 | ND | | 180 | ND | | 200 |
| 2,4-Dinitrophenol | 51-28-5 | 41000 | ug/kg | ND | | 180 | ND | | 200 | ND | | 590 | ND | | 180 | ND | | 200 | ND | | 200 | ND | | 190 | ND | | 180 | ND | | 200 |
| 2,4-Dinitrotoluene | 121-14-2 | 840000 | ug/kg | ND | | 34 | ND | | 39 | ND | | 110 | ND | | 36 | ND | | 39 | ND | | 39 | ND | | 37 | ND | | 36 | ND | | 39 |
| 2,6-Dinitrotoluene | 606-20-2 | 10000000 | ug/kg | ND | | 34 | ND | | 39 | ND | | 110 | ND | | 36 | ND | | 39 | ND | | 39 | ND | | 37 | ND | | 36 | ND | | 39 |
| Fluoranthene | 206-44-0 | 3200000 | ug/kg | 37 | | 6.9 | 21 | | 7.9 | 1300 | | 23 | ND | | 7.3 | 2.7 | J | 7.8 | 3.2 | J | 7.9 | 260 | | 7.5 | 4.4 | J | 7.2 | ND | | 7.9 |
| Fluorene | 86-73-7 | 3800000 | ug/kg | 2.3 | J | 6.9 | 9.6 | | 7.9 | 34 | | 23 | ND | | 7.3 | ND | | 7.8 | ND | | 7.9 | 6.3 | J | 7.5 | ND | | 7.2 | ND | | 7.9 |
| Hexachlorobenzene | 118-74-1 | 5800 | ug/kg | ND | | 6.9 | ND | | 7.9 | ND | | 23 | ND | | 7.3 | ND | | 7.8 | ND | | 7.9 | ND | | 7.5 | ND | | 7.2 | ND | | 7.9 |
| Hexachlorobutadiene | 87-68-3 | 1200000 | ug/kg | ND | | 6.9 | ND | | 7.9 | ND | | 23 | ND | | 7.3 | ND | | 7.8 | ND | | 7.9 | ND | | 7.5 | ND | | 7.2 | ND | | 7.9 |
| Hexachlorocyclopentadiene | 77-47-4 | 3300000 | ug/kg | ND | | 34 | ND | | 39 | ND | | 110 | ND | | 36 | ND | | 39 | ND | | 39 | ND | | 37 | ND | | 36 | ND | | 39 |
| Hexachloroethane | 67-72-1 | 56000 | ug/kg | ND | | 34 | ND | | 39 | ND | | 110 | ND | | 36 | ND | | 39 | ND | | 39 | ND | | 37 | ND | | 36 | ND | | 39 |
| Indeno(1,2,3-cd)pyrene | 193-39-5 | 190000000 | ug/kg | 10 | | 6.9 | 11 | | 7.9 | 270 | | 23 | ND | | 7.3 | ND | | 7.8 | ND | | 7.9 | 77 | | 7.5 | ND | | 7.2 | ND | | 7.9 |
| Isophorone | 78-59-1 | 10000000 | ug/kg | ND | | 34 | ND | | 39 | ND | | 110 | ND | | 36 | ND | | 39 | ND | | 39 | ND | | 37 | ND | | 36 | ND | | 39 |
| 2-Methylnaphthalene | 91-57-6 | 8000000 | ug/kg | 2.3 | J | 6.9 | ND | | 7.9 | ND | | 23 | ND | | 7.3 | ND | | 7.8 | ND | | 7.9 | ND | | 7.5 | ND | | 7.2 | ND | | 7.9 |
| Naphthalene | 91-20-3 | 7500000 | ug/kg | 4.5 | J | 6.9 | 12 | | 7.9 | 8.1 | J | 23 | ND | | 7.3 | ND | | 7.8 | ND | | 7.9 | 3.3 | J | 7.5 | 1.9 | J | 7.2 | ND | | 7.9 |
| 2-Nitroaniline[1] | 99-09-2 | 580 | ug/kg | ND | | 180 | ND | | 200 | ND | | 590 | ND | | 180 | ND | | 200 | ND | | 200 | ND | | 190 | ND | | 180 | ND | | 200 |
| 3-Nitroaniline[1] | 88-74-4 | 580 | ug/kg | ND | | 180 | ND | | 200 | ND | | 590 | ND | | 180 | ND | | 200 | ND | | 200 | ND | | 190 | ND | | 180 | ND | | 200 |
| 4-Nitroaniline[1] | 100-01-6 | 580 | ug/kg | ND | | 180 | ND | | 200 | ND | | 590 | ND | | 180 | ND | | 200 | ND | | 200 | ND | | 190 | ND | | 180 | ND | | 200 |
| Nitrobenzene | 98-95-3 | 5100000 | ug/kg | ND | | 6.9 | ND | | 7.9 | ND | | 23 | ND | | 7.3 | ND | | 7.8 | ND | | 7.9 | ND | | 7.5 | ND | | 7.2 | ND | | 7.9 |
| 2-Nitrophenol | 88-75-5 | 82000000 | ug/kg | ND | | 34 | ND | | 39 | ND | | 110 | ND | | 36 | ND | | 39 | ND | | 39 | ND | | 37 | ND | | 36 | ND | | 39 |
| 4-Nitrophenol | 100-02-7 | 6000000 | ug/kg | ND | | 180 | ND | | 200 | ND | | 590 | ND | | 180 | ND | | 200 | ND | | 200 | ND | | 190 | ND | | 180 | ND | | 200 |
| N-Nitrosodi-n-propylamine | 621-64-7 | 37000 | ug/kg | ND | | 6.9 | ND | | 7.9 | ND | | 23 | ND | | 7.3 | ND | | 7.8 | ND | | 7.9 | ND | | 7.5 | ND | | 7.2 | ND | | 7.9 |
| N-Nitrosodiphenylamine | 86-30-6 | 5600000 | ug/kg | ND | | 6.9 | ND | | 7.9 | ND | | 23 | ND | | 7.3 | ND | | 7.8 | ND | | 7.9 | ND | | 7.5 | ND | | 7.2 | ND | | 7.9 |
| Di-n-octylphthalate | 117-84-0 | 10000000 | ug/kg | ND | | 34 | ND | | 39 | ND | | 110 | ND | | 36 | ND | | 39 | ND | | 39 | ND | | 37 | ND | | 36 | ND | | 39 |
| Pentachlorophenol | 87-86-5 | 5000000 | ug/kg | ND | | 34 | ND | | 39 | ND | | 110 | ND | | 36 | ND | | 39 | ND | | 39 | ND | | 37 | ND | | 36 | ND | | 39 |
| Phenanthrene | 85-01-8 | 10000000 | ug/kg | 23 | | 6.9 | 16 | | 7.9 | 680 | | 23 | 3.2 | J | 7.3 | 3.3 | J | 7.8 | 4.5 | J | 7.9 | 110 | | 7.5 | 4.6 | J | 7.2 | 3.2 | J | 7.9 |
| Phenol | 108-95-2 | 40000000 | ug/kg | ND | | 6.9 | ND | | 7.9 | ND | | 23 | ND | | 7.3 | ND | | 7.8 | ND | | 7.9 | ND | | 7.5 | ND | | 7.2 | ND | | 7.9 |
| Pyrene | 129-00-0 | 2200000 | ug/kg | 30 | | 6.9 | 21 | | 7.9 | 870 | | 23 | ND | | 7.3 | ND | | 7.8 | 2.5 | J | 7.9 | 170 | | 7.5 | 3.9 | J | 7.2 | ND | | 7.9 |
| 2,4,5-Trichlorophenol | 95-95-4 | 190000000 | ug/kg | ND | | 34 | ND | | 39 | ND | | 110 | ND | | 36 | ND | | 39 | ND | | 39 | ND | | 37 | ND | | 36 | ND | | 39 |
| 2,4,6-Trichlorophenol | 88-06-2 | 8900000 | ug/kg | ND | | 34 | ND | | 39 | ND | | 110 | ND | | 36 | ND | | 39 | ND | | 39 | ND | | 37 | ND | | 36 | ND | | 39 |

# Table 3
## Summary of Soil Analytical Results
## Compared to Pennsylvania Non-Residential Non-Use Aquifer Soil to Groundwater MSCs
## U. S. Steel - Proposed Samax 14.2-Acre Parcel
## Fairless Hills, Pennsylvania

| | CAS No. | PADEP Non-Residential Non-Use Aquifer Soil to GW Pathway MSCs | Location ID | STP-1 | | | STP-1 | | | STP-2 | | | STP-2 | | | STP-3 | | | STP-3 | | | STP-3 | | | STP-4 | | | STP-4 | | |
|---|---|---|---|---|---|---|---|---|---|---|---|---|---|---|---|---|---|---|---|---|---|---|---|---|---|---|---|---|---|---|
| | | | Sample ID | 001-STP-1_1.5-2.0 | | | 002-STP-1_10-10.5 | | | 005-STP-2_1.5-2.0 | | | 006-STP-2_10.5-11.0 | | | 008-STP-3_1.5-2.0 | | | 009-DUP-1-103007 | | | 010-STP-3_10.5-11 | | | 014-STP-4_1.5-2.0 | | | 015-STP-4_11.5-12 | | |
| | | | Sample Date | 10/30/07 | | | 10/30/07 | | | 10/30/07 | | | 10/30/07 | | | 10/30/07 | | | 10/30/07 | | | 10/30/07 | | | 10/31/07 | | | 10/31/07 | | |
| | | | Depth to GW | NA | | | NA | | | 11.00 | | | 11.00 | | | 11.00 | | | 11.00 | | | 11.00 | | | 11.00 | | | 11.00 | | |
| | | | Start Depth (ft) | 1.50 | | | 10.00 | | | 1.50 | | | 10.50 | | | 1.50 | | | 1.50 | | | 10.50 | | | 1.50 | | | 11.50 | | |
| | | | End Depth (ft) | 2.00 | | | 10.50 | | | 2.00 | | | 11.00 | | | 2.00 | | | 2.00 | | | 11.00 | | | 2.00 | | | 12.00 | | |
| **PCB (ug/kg)** | | | **Units** | **Result** | **Q** | **RL** | **Result** | **Q** | **RL** | **Result** | **Q** | **RL** | **Result** | **Q** | **RL** | **Result** | **Q** | **RL** | **Result** | **Q** | **RL** | **Result** | **Q** | **RL** | **Result** | **Q** | **RL** | **Result** | **Q** | **RL** |
| Aroclor 1016 | 12674-11-2 | 200000 | ug/kg | ND | | 34 | ND | | 38 | ND | | 38 | ND | | 36 | ND | | 39 | ND | | 39 | ND | | 37 | ND | | 36 | ND | | 38 |
| Aroclor 1221 | 11104-28-2 | 2500 | ug/kg | ND | | 34 | ND | | 38 | ND | | 38 | ND | | 36 | ND | | 39 | ND | | 39 | ND | | 37 | ND | | 36 | ND | | 38 |
| Aroclor 1232 | 11141-16-5 | 2000 | ug/kg | ND | | 34 | ND | | 38 | ND | | 38 | ND | | 36 | ND | | 39 | ND | | 39 | ND | | 37 | ND | | 36 | ND | | 38 |
| Aroclor 1242 | 53469-21-9 | 62000 | ug/kg | ND | | 34 | ND | | 38 | ND | | 38 | ND | | 36 | ND | | 39 | ND | | 39 | ND | | 37 | ND | | 36 | ND | | 38 |
| Aroclor 1248 | 12672-29-6 | 67000 | ug/kg | ND | | 34 | ND | | 38 | ND | | 38 | ND | | 36 | ND | | 39 | ND | | 39 | ND | | 37 | ND | | 36 | ND | | 38 |
| Aroclor 1254 | 11097-69-1 | 280000 | ug/kg | ND | | 34 | ND | | 38 | 41 | | 38 | ND | | 36 | ND | | 39 | ND | | 39 | ND | | 37 | ND | | 36 | ND | | 38 |
| Aroclor 1260 | 11096-82-5 | 1900000 | ug/kg | ND | | 34 | ND | | 38 | ND | | 38 | ND | | 36 | ND | | 39 | ND | | 39 | ND | | 37 | ND | | 36 | ND | | 38 |
| **PP Metals (mg/kg)** | | | **Units** | **Result** | **Q** | **RL** | **Result** | **Q** | **RL** | **Result** | **Q** | **RL** | **Result** | **Q** | **RL** | **Result** | **Q** | **RL** | **Result** | **Q** | **RL** | **Result** | **Q** | **RL** | **Result** | **Q** | **RL** | **Result** | **Q** | **RL** |
| Antimony | 7440-36-0 | 27000 | mg/kg | 0.059 | B | 0.21 | 0.04 | B | 0.23 | 0.021 | B | 0.23 | 0.0053 | B | 0.22 | ND | | 0.23 | ND | | 0.23 | 0.029 | B | 0.22 | 0.022 | B | 0.22 | 0.017 | B | 0.24 |
| Arsenic | 7440-38-2 | 150000 | mg/kg | 8.1 | | 0.1 | 4.7 | | 0.12 | 9.8 | | 0.11 | 2.5 | | 0.11 | 4.9 | | 0.12 | 5 | | 0.12 | 2 | | 0.11 | 2 | J | 0.11 | 3.4 | J | 0.12 |
| Beryllium | 7440-41-7 | 190000 | mg/kg | 1 | | 0.1 | 0.44 | | 0.12 | 0.47 | | 0.11 | 0.21 | | 0.11 | 0.39 | | 0.12 | 0.39 | | 0.12 | 0.23 | | 0.11 | 0.3 | | 0.11 | 0.29 | | 0.12 |
| Cadmium | 7440-43-9 | 38000 | mg/kg | 0.12 | | 0.1 | 0.099 | B | 0.12 | 0.071 | B | 0.11 | 0.052 | B | 0.11 | 0.065 | B | 0.12 | 0.055 | B | 0.12 | 0.09 | B | 0.11 | 0.072 | B | 0.11 | 0.076 | B | 0.12 |
| Chromium | 7440-47-3 | 190000 | mg/kg | 31.3 | J | 0.21 | 9.9 | J | 0.23 | 16.9 | J | 0.23 | 5.5 | J | 0.22 | 11.4 | J | 0.23 | 11.2 | J | 0.23 | 6.2 | J | 0.22 | 6.1 | J | 0.22 | 7.1 | J | 0.24 |
| Copper | 7440-50-8 | 190000 | mg/kg | 27.2 | J | 0.21 | 12.6 | J | 0.23 | 12.5 | J | 0.23 | 6.8 | J | 0.22 | 10.8 | J | 0.23 | 11.6 | J | 0.23 | 8.1 | J | 0.22 | 9.3 | | 0.22 | 9 | | 0.24 |
| Lead | 7439-92-1 | 190000 | mg/kg | 12.9 | | 0.1 | 10.4 | | 0.12 | 23.6 | | 0.11 | 3.6 | | 0.11 | 9.4 | | 0.12 | 9.6 | | 0.12 | 9.4 | | 0.11 | 10 | | 0.11 | 6.7 | | 0.12 |
| Mercury | 7439-97-6 | 10000 | mg/kg | ND | | 0.034 | 0.031 | B | 0.039 | 0.025 | B | 0.038 | ND | | 0.036 | 0.024 | B | 0.039 | 0.03 | B | 0.039 | 0.026 | B | 0.037 | 0.013 | B | 0.035 | 0.016 | B | 0.039 |
| Nickel | 7440-02-0 | 190000 | mg/kg | 20.7 | | 0.1 | 12.8 | | 0.12 | 9.5 | | 0.11 | 7.1 | | 0.11 | 12.9 | | 0.12 | 12.8 | | 0.12 | 7.9 | | 0.11 | 7.6 | J | 0.11 | 11.5 | J | 0.12 |
| Selenium | 7782-49-2 | 26000 | mg/kg | 0.68 | J | 0.52 | 0.56 | B J | 0.59 | 0.74 | J | 0.57 | 0.32 | B J | 0.54 | 0.5 | B J | 0.58 | 0.54 | B J | 0.59 | 0.41 | B J | 0.56 | 0.29 | B | 0.55 | 0.35 | B | 0.59 |
| Silver | 7440-22-4 | 84000 | mg/kg | 0.031 | B | 0.1 | ND | | 0.12 | ND | | 0.11 | ND | | 0.11 | ND | | 0.12 | ND | | 0.12 | 0.0049 | B | 0.11 | ND | | 0.11 | ND | | 0.12 |
| Thallium | 7440-28-0 | 14000 | mg/kg | 0.47 | J | 0.1 | 0.11 | B J | 0.12 | 0.1 | B J | 0.11 | 0.027 | B J | 0.11 | 0.084 | B J | 0.12 | 0.084 | B J | 0.12 | 0.027 | B J | 0.11 | 0.054 | B | 0.11 | 0.05 | B | 0.12 |
| Zinc | 7440-66-6 | 190000 | mg/kg | 53.3 | J | 0.52 | 31.8 | J | 0.59 | 36.9 | J | 0.57 | 19.8 | J | 0.54 | 28.4 | J | 0.58 | 28.8 | J | 0.59 | 27 | J | 0.56 | 20.6 | J | 0.55 | 24.7 | J | 0.59 |
| **General Chemistry** | | | **Units** | **Result** | **Q** | **RL** | **Result** | **Q** | **RL** | **Result** | **Q** | **RL** | **Result** | **Q** | **RL** | **Result** | **Q** | **RL** | **Result** | **Q** | **RL** | **Result** | **Q** | **RL** | **Result** | **Q** | **RL** | **Result** | **Q** | **RL** |
| Percent Solids | none | NS | percent | 96.9 | | | 85.2 | | | 87 | | | 92.1 | | | 85.6 | | | 85.3 | | | 89.5 | | | 92.9 | | | 85.1 | | |

# Table 3
## Summary of Soil Analytical Results
## Compared to Pennsylvania Non-Residential Non-Use Aquifer Soil to Groundwater MSCs
## U. S. Steel - Proposed Samax 14.2-Acre Parcel
## Fairless Hills, Pennsylvania

| | CAS No. | PADEP Non-Residential Non-Use Aquifer Soil to GW Pathway MSCs | Location ID | STP-5 | | | STP-5 | | | STP-6 | | | STP-6 | | | STP-7 | | | STP-7 | | | STP-8 | | | STP-8 | | |
|---|---|---|---|---|---|---|---|---|---|---|---|---|---|---|---|---|---|---|---|---|---|---|---|---|---|---|---|
| | | | Sample ID | 017-STP-5_1.5-2.0 | | | 018-STP-5_10.5-11 | | | 019-STP-6_1.5-2.0 | | | 020-STP-6_7.5-8 | | | 021-STP-7_1.5-2.0 | | | 022-STP-7_3.5-4.0 | | | 023-STP-8_1.5-2.0 | | | 024-STP-8_4.5-5.0 | | |
| | | | Sample Date | 10/31/07 | | | 10/31/07 | | | 10/31/07 | | | 10/31/07 | | | 10/31/07 | | | 10/31/07 | | | 10/31/07 | | | 10/31/07 | | |
| | | | Depth to GW | 11.00 | | | 11.00 | | | 8.00 | | | 8.00 | | | 4.00 | | | 4.00 | | | 5.00 | | | 5.00 | | |
| | | | Start Depth (ft) | 1.50 | | | 10.50 | | | 1.50 | | | 7.50 | | | 1.50 | | | 3.50 | | | 1.50 | | | 4.50 | | |
| | | | End Depth (ft) | 2.00 | | | 11.00 | | | 2.00 | | | 8.00 | | | 2.00 | | | 4.00 | | | 2.00 | | | 5.00 | | |
| **TCL Volatiles** | | | **Units** | **Result** | **Q** | **RL** | **Result** | **Q** | **RL** | **Result** | **Q** | **RL** | **Result** | **Q** | **RL** | **Result** | **Q** | **RL** | **Result** | **Q** | **RL** | **Result** | **Q** | **RL** | **Result** | **Q** | **RL** |
| Acetone | 67-64-1 | 10000000 | ug/kg | ND | | 21 | ND | | 20 | ND | | 24 | 9.5 | J | 22 | ND | | 21 | ND | | 23 | ND | | 24 | ND | | 33 |
| Benzene | 71-43-2 | 50000 | ug/kg | ND | | 5.2 | ND | | 5.1 | ND | | 5.9 | ND | | 5.5 | ND | | 5.3 | ND | | 5.8 | ND | | 5.9 | ND | | 8.3 |
| Bromodichloromethane | 75-27-4 | 10000 | ug/kg | ND | | 5.2 | ND | | 5.1 | ND | | 5.9 | ND | | 5.5 | ND | | 5.3 | ND | | 5.8 | ND | | 5.9 | ND | | 8.3 |
| Bromoform | 75-25-2 | 1000000 | ug/kg | ND | | 5.2 | ND | | 5.1 | ND | | 5.9 | ND | | 5.5 | ND | | 5.3 | ND | | 5.8 | ND | | 5.9 | ND | | 8.3 |
| Bromomethane | 74-83-9 | 100000 | ug/kg | ND | | 5.2 | ND | | 5.1 | ND | | 5.9 | ND | | 5.5 | ND | | 5.3 | ND | | 5.8 | ND | | 5.9 | ND | | 8.3 |
| 2-Butanone | 78-93-3 | 10000000 | ug/kg | ND | | 5.2 | ND | | 5.1 | ND | | 5.9 | ND | | 5.5 | ND | | 5.3 | ND | | 5.8 | ND | | 5.9 | ND | | 8.3 |
| Carbon Disulfide | 75-15-0 | 410000 | ug/kg | ND | | 5.2 | ND | | 5.1 | ND | | 5.9 | ND | | 5.5 | ND | | 5.3 | ND | | 5.8 | ND | | 5.9 | ND | | 8.3 |
| Carbon Tetrachloride | 56-23-5 | 5000 | ug/kg | ND | | 5.2 | ND | | 5.1 | ND | | 5.9 | ND | | 5.5 | ND | | 5.3 | ND | | 5.8 | ND | | 5.9 | ND | | 8.3 |
| Chlorobenzene | 108-90-7 | 1000000 | ug/kg | ND | | 5.2 | ND | | 5.1 | ND | | 5.9 | ND | | 5.5 | ND | | 5.3 | ND | | 5.8 | ND | | 5.9 | ND | | 8.3 |
| Chloroethane | 75-00-3 | 9000000 | ug/kg | ND | | 5.2 | ND | | 5.1 | ND | | 5.9 | ND | | 5.5 | ND | | 5.3 | ND | | 5.8 | ND | | 5.9 | ND | | 8.3 |
| Chloroform | 67-66-3 | 100000 | ug/kg | ND | | 5.2 | ND | | 5.1 | ND | | 5.9 | ND | | 5.5 | ND | | 5.3 | ND | | 5.8 | ND | | 5.9 | ND | | 8.3 |
| Chloromethane | 74-87-3 | 30000 | ug/kg | ND | | 5.2 | ND | | 5.1 | ND | | 5.9 | ND | | 5.5 | ND | | 5.3 | ND | | 5.8 | ND | | 5.9 | ND | | 8.3 |
| isopropylbenzene | 98-82-8 | 10000000 | ug/kg | ND | | 5.2 | ND | | 5.1 | ND | | 5.9 | ND | | 5.5 | ND | | 5.3 | ND | | 5.8 | ND | | 5.9 | ND | | 8.3 |
| Cyclohexane | 110-82-7 | 500 | ug/kg | ND | | 5.2 | ND | | 5.1 | ND | | 5.9 | ND | | 5.5 | ND | | 5.3 | ND | | 5.8 | ND | | 5.9 | ND | | 8.3 |
| 1,2-Dibromoethane | 106-93-4 | 500 | ug/kg | ND | | 5.2 | ND | | 5.1 | ND | | 5.9 | ND | | 5.5 | ND | | 5.3 | ND | | 5.8 | ND | | 5.9 | ND | | 8.3 |
| 1,2-Dibromo-3-chloropropane | 96-12-8 | 2000 | ug/kg | ND | | 5.2 | ND | | 5.1 | ND | | 5.9 | ND | | 5.5 | ND | | 5.3 | ND | | 5.8 | ND | | 5.9 | ND | | 8.3 |
| Dibromochloromethane | 124-48-1 | 1000000 | ug/kg | ND | | 5.2 | ND | | 5.1 | ND | | 5.9 | ND | | 5.5 | ND | | 5.3 | ND | | 5.8 | ND | | 5.9 | ND | | 8.3 |
| 1,4-Dichlorobenzene | 106-46-7 | 1000000 | ug/kg | ND | | 5.2 | ND | | 5.1 | ND | | 5.9 | ND | | 5.5 | ND | | 5.3 | ND | | 5.8 | ND | | 5.9 | ND | | 8.3 |
| 1,2-Dichlorobenzene | 95-50-1 | 6000000 | ug/kg | ND | | 5.2 | ND | | 5.1 | ND | | 5.9 | ND | | 5.5 | ND | | 5.3 | ND | | 5.8 | ND | | 5.9 | ND | | 8.3 |
| 1,3-Dichlorobenzene | 541-73-1 | 8100000 | ug/kg | ND | | 5.2 | ND | | 5.1 | ND | | 5.9 | ND | | 5.5 | ND | | 5.3 | ND | | 5.8 | ND | | 5.9 | ND | | 8.3 |
| Dichlorodifluoromethane | 75-71-8 | 10000000 | ug/kg | ND | | 5.2 | ND | | 5.1 | ND | | 5.9 | ND | | 5.5 | ND | | 5.3 | ND | | 5.8 | ND | | 5.9 | ND | | 8.3 |
| 1,1-Dichloroethane | 75-34-3 | 110000 | ug/kg | ND | | 5.2 | ND | | 5.1 | ND | | 5.9 | ND | | 5.5 | ND | | 5.3 | ND | | 5.8 | ND | | 5.9 | ND | | 8.3 |
| 1,2-Dichloroethane | 107-06-2 | 5000 | ug/kg | ND | | 5.2 | ND | | 5.1 | ND | | 5.9 | ND | | 5.5 | ND | | 5.3 | ND | | 5.8 | ND | | 5.9 | ND | | 8.3 |
| trans-1,2-Dichloroethene | 156-60-5 | 100000 | ug/kg | ND | | 5.2 | ND | | 5.1 | ND | | 5.9 | ND | | 5.5 | ND | | 5.3 | ND | | 5.8 | ND | | 5.9 | ND | | 8.3 |
| cis-1,2-Dichloroethene | 156-59-2 | 70000 | ug/kg | ND | | 5.2 | ND | | 5.1 | ND | | 5.9 | ND | | 5.5 | ND | | 5.3 | ND | | 5.8 | ND | | 5.9 | ND | | 8.3 |
| 1,1-Dichloroethene | 75-35-4 | 7000 | ug/kg | ND | | 5.2 | ND | | 5.1 | ND | | 5.9 | ND | | 5.5 | ND | | 5.3 | ND | | 5.8 | ND | | 5.9 | ND | | 8.3 |
| 1,2-Dichloropropane | 78-87-5 | 5000 | ug/kg | ND | | 5.2 | ND | | 5.1 | ND | | 5.9 | ND | | 5.5 | ND | | 5.3 | ND | | 5.8 | ND | | 5.9 | ND | | 8.3 |
| trans-1,3-Dichloropropene | 10061-02-6 | 260000 | ug/kg | ND | | 5.2 | ND | | 5.1 | ND | | 5.9 | ND | | 5.5 | ND | | 5.3 | ND | | 5.8 | ND | | 5.9 | ND | | 8.3 |
| cis-1,3-Dichloropropene | 10061-01-5 | 260000 | ug/kg | ND | | 5.2 | ND | | 5.1 | ND | | 5.9 | ND | | 5.5 | ND | | 5.3 | ND | | 5.8 | ND | | 5.9 | ND | | 8.3 |
| Ethylbenzene | 100-41-4 | 7000000 | ug/kg | ND | | 5.2 | ND | | 5.1 | ND | | 5.9 | ND | | 5.5 | ND | | 5.3 | ND | | 5.8 | ND | | 5.9 | ND | | 8.3 |
| 2-Hexanone | 591-78-6 | 500 | ug/kg | ND | | 5.2 | ND | | 5.1 | ND | | 5.9 | ND | | 5.5 | ND | | 5.3 | ND | | 5.8 | ND | | 5.9 | ND | | 8.3 |
| Methyl Acetate | 79-20-9 | 10000000 | ug/kg | ND | | 5.2 | ND | | 5.1 | ND | | 5.9 | ND | | 5.5 | ND | | 5.3 | ND | | 5.8 | ND | | 5.9 | ND | | 8.3 |
| Methyl tert-Butyl Ether | 1634-04-4 | 20000 | ug/kg | ND | | 5.2 | ND | | 5.1 | ND | | 5.9 | ND | | 5.5 | ND | | 5.3 | ND | | 5.8 | ND | | 5.9 | ND | | 8.3 |
| 4-Methyl-2-pentanone | 108-10-1 | 4100000 | ug/kg | ND | | 5.2 | ND | | 5.1 | ND | | 5.9 | ND | | 5.5 | ND | | 5.3 | ND | | 5.8 | ND | | 5.9 | ND | | 8.3 |
| Methylcyclohexane | 108-87-2 | NS | ug/kg | ND | | 5.2 | ND | | 5.1 | ND | | 5.9 | ND | | 5.5 | ND | | 5.3 | ND | | 5.8 | ND | | 5.9 | ND | | 8.3 |
| Methylene Chloride | 75-09-2 | 50000 | ug/kg | 2.3 | J B | 5.2 | 1 | J | 5.1 | 1.9 | J | 5.9 | 2.2 | J | 5.5 | 1.4 | J | 5.3 | 1.9 | J | 5.8 | 3.1 | J | 5.9 | 4 | J B | 8.3 |
| Styrene | 100-42-5 | 2400000 | ug/kg | ND | | 5.2 | ND | | 5.1 | ND | | 5.9 | ND | | 5.5 | ND | | 5.3 | ND | | 5.8 | ND | | 5.9 | ND | | 8.3 |
| 1,1,2,2-Tetrachloroethane | 79-34-5 | 3000 | ug/kg | ND | | 5.2 | ND | | 5.1 | ND | | 5.9 | ND | | 5.5 | ND | | 5.3 | ND | | 5.8 | ND | | 5.9 | ND | | 8.3 |
| Tetrachloroethene | 127-18-4 | 5000 | ug/kg | ND | | 5.2 | ND | | 5.1 | ND | | 5.9 | ND | | 5.5 | ND | | 5.3 | ND | | 5.8 | ND | | 5.9 | ND | | 8.3 |
| Toluene | 108-88-3 | 10000000 | ug/kg | ND | | 5.2 | ND | | 5.1 | ND | | 5.9 | ND | | 5.5 | ND | | 5.3 | ND | | 5.8 | ND | | 5.9 | ND | | 8.3 |
| Xylenes (Total) | 1330-20-7 | 10000000 | ug/kg | ND | | 16 | ND | | 15 | ND | | 18 | ND | | 16 | ND | | 16 | ND | | 17 | ND | | 18 | ND | | 25 |
| 1,1,2-Trichloro-1,2,2-trifluoroethane | 76-13-1 | 53000000 | ug/kg | ND | | 5.2 | ND | | 5.1 | ND | | 5.9 | ND | | 5.5 | ND | | 5.3 | ND | | 5.8 | ND | | 5.9 | ND | | 8.3 |
| 1,2,4-Trichlorobenzene | 120-82-1 | 10000000 | ug/kg | ND | | 5.2 | ND | | 5.1 | ND | | 5.9 | ND | | 5.5 | ND | | 5.3 | ND | | 5.8 | ND | | 5.9 | ND | | 8.3 |
| 1,1,1-Trichloroethane | 71-55-6 | 200000 | ug/kg | ND | | 5.2 | ND | | 5.1 | ND | | 5.9 | ND | | 5.5 | ND | | 5.3 | ND | | 5.8 | ND | | 5.9 | ND | | 8.3 |
| 1,1,2-Trichloroethane | 79-00-5 | 5000 | ug/kg | ND | | 5.2 | ND | | 5.1 | ND | | 5.9 | ND | | 5.5 | ND | | 5.3 | ND | | 5.8 | ND | | 5.9 | ND | | 8.3 |
| Trichloroethene | 79-01-6 | 5000 | ug/kg | ND | | 5.2 | ND | | 5.1 | ND | | 5.9 | ND | | 5.5 | ND | | 5.3 | ND | | 5.8 | ND | | 5.9 | ND | | 8.3 |
| Trichlorofluoromethane | 75-69-4 | 10000000 | ug/kg | ND | | 5.2 | ND | | 5.1 | ND | | 5.9 | ND | | 5.5 | ND | | 5.3 | ND | | 5.8 | ND | | 5.9 | ND | | 8.3 |
| Vinyl Chloride | 75-01-4 | 2000 | ug/kg | ND | | 5.2 | ND | | 5.1 | ND | | 5.9 | ND | | 5.5 | ND | | 5.3 | ND | | 5.8 | ND | | 5.9 | ND | | 8.3 |

# Table 3
## Summary of Soil Analytical Results
## Compared to Pennsylvania Non-Residential Non-Use Aquifer Soil to Groundwater MSCs
## U. S. Steel - Proposed Samax 14.2-Acre Parcel
## Fairless Hills, Pennsylvania

| | CAS No. | PADEP Non-Residential Non-Use Aquifer Soil to GW Pathway MSCs | Location ID | STP-5 | | | STP-5 | | | STP-6 | | | STP-6 | | | STP-7 | | | STP-7 | | | STP-8 | | | STP-8 | | |
|---|---|---|---|---|---|---|---|---|---|---|---|---|---|---|---|---|---|---|---|---|---|---|---|---|---|---|---|
| | | | Sample ID | 017-STP-5_1.5-2.0 | | | 018-STP-5_10.5-11 | | | 019-STP-6_1.5-2.0 | | | 020-STP-6_7.5-8 | | | 021-STP-7_1.5-2.0 | | | 022-STP-7_3.5-4.0 | | | 023-STP-8_1.5-2.0 | | | 024-STP-8_4.5-5.0 | | |
| | | | Sample Date | 10/31/07 | | | 10/31/07 | | | 10/31/07 | | | 10/31/07 | | | 10/31/07 | | | 10/31/07 | | | 10/31/07 | | | 10/31/07 | | |
| | | | Depth to GW | 11.00 | | | 11.00 | | | 8.00 | | | 8.00 | | | 4.00 | | | 4.00 | | | 5.00 | | | 5.00 | | |
| | | | Start Depth (ft) | 1.50 | | | 10.50 | | | 1.50 | | | 7.50 | | | 1.50 | | | 3.50 | | | 1.50 | | | 4.50 | | |
| | | | End Depth (ft) | 2.00 | | | 11.00 | | | 2.00 | | | 8.00 | | | 2.00 | | | 4.00 | | | 2.00 | | | 5.00 | | |
| **TCL Semivolatiles** | | | **Units** | **Result** | **Q** | **RL** | **Result** | **Q** | **RL** | **Result** | **Q** | **RL** | **Result** | **Q** | **RL** | **Result** | **Q** | **RL** | **Result** | **Q** | **RL** | **Result** | **Q** | **RL** | **Result** | **Q** | **RL** |
| Acenaphthene | 83-32-9 | 4700000 | ug/kg | ND | | 7.2 | ND | | 7.7 | ND | | 7.1 | 3.6 | J | 8 | ND | | 7.2 | ND | | 7.4 | ND | | 7.1 | 5.1 | J | 10 |
| Acenaphthylene | 208-96-8 | 18000000 | ug/kg | 4.2 | J | 7.2 | ND | | 7.7 | ND | | 7.1 | 20 | | 8 | ND | | 7.2 | ND | | 7.4 | 2 | J | 7.1 | 26 | | 10 |
| Acetaphenone | 98-86-2 | 1000000 | ug/kg | 3 | J | 35 | 2.7 | J | 38 | ND | | 35 | 2.8 | J | 39 | ND | | 35 | ND | | 37 | ND | | 35 | ND | | 51 |
| Anthracene | 120-12-7 | 350000 | ug/kg | 3.8 | J | 7.2 | ND | | 7.7 | ND | | 7.1 | 17 | | 8 | ND | | 7.2 | ND | | 7.4 | 3.6 | J | 7.1 | 29 | | 10 |
| Atrazine[1] | 1912-24-9 | 300 | ug/kg | ND | | 35 | ND | | 38 | ND | | 35 | ND | | 39 | ND | | 35 | ND | | 37 | ND | | 35 | ND | | 51 |
| Benzaldehyde | 100-52-7 | NS | ug/kg | ND | | 35 | ND | | 38 | ND | | 35 | ND | | 39 | ND | | 35 | ND | | 37 | ND | | 35 | ND | | 51 |
| Benzo(a)anthracene | 56-55-3 | 960000 | ug/kg | 15 | | 7.2 | ND | | 7.7 | ND | | 7.1 | 44 | | 8 | 1.5 | J | 7.2 | 3.1 | J | 7.4 | 19 | | 7.1 | 63 | | 10 |
| Benzo(a)pyrene | 50-32-8 | 880000 | ug/kg | 16 | | 7.2 | ND | | 7.7 | ND | | 7.1 | 51 | | 8 | 1.6 | J | 7.2 | 3.2 | J | 7.4 | 21 | | 7.1 | 60 | | 10 |
| Benzo(b)fluoranthene | 205-99-2 | 170000 | ug/kg | 21 | | 7.2 | ND | | 7.7 | ND | | 7.1 | 58 | | 8 | ND | | 7.2 | 4.3 | J | 7.4 | 30 | | 7.1 | 76 | | 10 |
| Benzo(g,h,i)perylene | 191-24-2 | 180000 | ug/kg | 12 | | 7.2 | ND | | 7.7 | ND | | 7.1 | 42 | | 8 | ND | | 7.2 | 2 | J | 7.4 | 18 | | 7.1 | 45 | | 10 |
| Benzo(k)fluoranthene | 207-08-9 | 610000 | ug/kg | 7.3 | | 7.2 | ND | | 7.7 | ND | | 7.1 | 20 | | 8 | ND | | 7.2 | 1.2 | J | 7.4 | 12 | | 7.1 | 31 | | 10 |
| 1,1'-Biphenyl | 92-52-4 | 3100000 | ug/kg | ND | | 35 | ND | | 38 | ND | | 35 | ND | | 39 | ND | | 35 | ND | | 37 | ND | | 35 | 4.9 | J | 51 |
| bis(2-Chloroethoxy) methane | 111-91-1 | 500 | ug/kg | ND | | 35 | ND | | 38 | ND | | 35 | ND | | 39 | ND | | 35 | ND | | 37 | ND | | 35 | ND | | 51 |
| bis(2-Chloroethyl) ether | 111-44-4 | 5500 | ug/kg | ND | | 7.2 | ND | | 7.7 | ND | | 7.1 | ND | | 8 | ND | | 7.2 | ND | | 7.4 | ND | | 7.1 | ND | | 10 |
| 2,2'-oxybis(1-Chloropropane) | 108-60-1 | 3000000 | ug/kg | ND | | 7.2 | ND | | 7.7 | ND | | 7.1 | ND | | 8 | ND | | 7.2 | ND | | 7.4 | ND | | 7.1 | ND | | 10 |
| bis-(2-Ethylhexyl)phthalate | 117-81-7 | 6300000 | ug/kg | 7.1 | J | 35 | 5.6 | J | 38 | 4.2 | J | 35 | 5.6 | J | 39 | 5 | J | 35 | 5.3 | J | 37 | 5.4 | J | 35 | ND | | 51 |
| 4-Bromophenyl-phenylether | 101-55-3 | 500 | ug/kg | ND | | 35 | ND | | 38 | ND | | 35 | ND | | 39 | ND | | 35 | ND | | 37 | ND | | 35 | ND | | 51 |
| Butylbenzylphthalate | 85-68-7 | 10000000 | ug/kg | 5.9 | J | 35 | 5.5 | J | 38 | 4.3 | J | 35 | 3.8 | J | 39 | 3.5 | J | 35 | 3.7 | J | 37 | 3.2 | J | 35 | ND | | 51 |
| Caprolactam | 105-60-2 | NS | ug/kg | 9.5 | J | 35 | 13 | J | 38 | 9.5 | J | 35 | 10 | J | 39 | 7.3 | J | 35 | ND | | 37 | ND | | 35 | ND | | 51 |
| Carbazole | 86-74-8 | 760000 | ug/kg | ND | | 7.2 | ND | | 7.7 | ND | | 7.1 | 4.3 | J | 8 | ND | | 7.2 | ND | | 7.4 | 2.9 | J | 7.1 | 7.5 | J | 10 |
| 4-Chloro-3-methylphenol | 59-50-7 | 110000 | ug/kg | ND | | 35 | ND | | 38 | ND | | 35 | ND | | 39 | ND | | 35 | ND | | 37 | ND | | 35 | ND | | 51 |
| 4-Chloroaniline | 106-47-8 | 52000 | ug/kg | ND | | 35 | ND | | 38 | ND | | 35 | ND | | 39 | ND | | 35 | ND | | 37 | ND | | 35 | ND | | 51 |
| 2-Chloronapthalene | 91-58-7 | 18000000 | ug/kg | ND | | 7.2 | ND | | 7.7 | ND | | 7.1 | ND | | 8 | ND | | 7.2 | ND | | 7.4 | ND | | 7.1 | ND | | 10 |
| 2-Chlorophenol | 95-57-8 | 4400 | ug/kg | ND | | 35 | ND | | 38 | ND | | 35 | ND | | 39 | ND | | 35 | ND | | 37 | ND | | 35 | ND | | 51 |
| 4-Chlorophenyl-phenylether | 7005-72-3 | 500 | ug/kg | ND | | 35 | ND | | 38 | ND | | 35 | ND | | 39 | ND | | 35 | ND | | 37 | ND | | 35 | ND | | 51 |
| Chrysene | 218-01-9 | 230000 | ug/kg | 19 | | 7.2 | ND | | 7.7 | ND | | 7.1 | 64 | | 8 | 1.6 | J | 7.2 | 3.1 | J | 7.4 | 23 | | 7.1 | 77 | | 10 |
| 2-Methylphenol | 95-48-7 | 10000000 | ug/kg | ND | | 35 | ND | | 38 | ND | | 35 | ND | | 39 | ND | | 35 | ND | | 37 | ND | | 35 | ND | | 51 |
| 4-Methylphenol | 106-44-5 | 51000000 | ug/kg | ND | | 35 | ND | | 38 | ND | | 35 | ND | | 39 | ND | | 35 | ND | | 37 | ND | | 35 | ND | | 51 |
| Dibenzo(a,h)anthracene | 53-70-3 | 270000 | ug/kg | ND | | 7.2 | ND | | 7.7 | ND | | 7.1 | 8.9 | | 8 | ND | | 7.2 | ND | | 7.4 | 3.6 | J | 7.1 | 13 | | 10 |
| Dibenzofuran | 132-64-9 | 500 | ug/kg | ND | | 35 | ND | | 38 | ND | | 35 | 2.3 | J | 39 | ND | | 35 | ND | | 37 | ND | | 35 | 8.2 | J | 51 |
| 3,3'-Dichlorobenzidine | 91-94-1 | 17000000 | ug/kg | ND | | 35 | ND | | 38 | ND | | 35 | ND | | 39 | ND | | 35 | ND | | 37 | ND | | 35 | ND | | 51 |
| 2,4-Dichlorophenol | 120-83-2 | 2000000 | ug/kg | ND | | 7.2 | ND | | 7.7 | ND | | 7.1 | ND | | 8 | ND | | 7.2 | ND | | 7.4 | ND | | 7.1 | ND | | 10 |
| Diethylphthalate | 84-66-2 | 10000000 | ug/kg | ND | | 35 | ND | | 38 | ND | | 35 | ND | | 39 | ND | | 35 | ND | | 37 | ND | | 35 | ND | | 51 |
| 2,4-Dimethylphenol | 105-67-9 | 10000000 | ug/kg | ND | | 35 | ND | | 38 | ND | | 35 | ND | | 39 | ND | | 35 | ND | | 37 | ND | | 35 | ND | | 51 |
| Dimethylphthalate | 131-11-3 | 500 | ug/kg | ND | | 35 | ND | | 38 | ND | | 35 | ND | | 39 | ND | | 35 | ND | | 37 | ND | | 35 | ND | | 51 |
| Di-n-butylphthalate | 84-74-2 | 10000000 | ug/kg | ND | | 35 | ND | | 38 | ND | | 35 | ND | | 39 | ND | | 35 | ND | | 37 | ND | | 35 | ND | | 51 |
| 4,6-Dinitro-2-methylphenol[1] | 534-52-1 | 500 | ug/kg | ND | | 180 | ND | | 200 | ND | | 180 | ND | | 200 | ND | | 180 | ND | | 190 | ND | | 180 | ND | | 260 |
| 2,4-Dinitrophenol | 51-28-5 | 41000 | ug/kg | ND | | 180 | ND | | 200 | ND | | 180 | ND | | 200 | ND | | 180 | ND | | 190 | ND | | 180 | ND | | 260 |
| 2,4-Dinitrotoluene | 121-14-2 | 840000 | ug/kg | ND | | 35 | ND | | 38 | ND | | 35 | ND | | 39 | ND | | 35 | ND | | 37 | ND | | 35 | ND | | 51 |
| 2,6-Dinitrotoluene | 606-20-2 | 10000000 | ug/kg | ND | | 35 | ND | | 38 | ND | | 35 | ND | | 39 | ND | | 35 | ND | | 37 | ND | | 35 | ND | | 51 |
| Fluoranthene | 206-44-0 | 3200000 | ug/kg | 26 | | 7.2 | ND | | 7.7 | ND | | 7.1 | 98 | | 8 | 2.8 | J | 7.2 | 5.3 | J | 7.4 | 44 | | 7.1 | 120 | | 10 |
| Fluorene | 86-73-7 | 3800000 | ug/kg | ND | | 7.2 | ND | | 7.7 | ND | | 7.1 | 6.9 | J | 8 | ND | | 7.2 | ND | | 7.4 | ND | | 7.1 | 12 | | 10 |
| Hexachlorobenzene | 118-74-1 | 5800 | ug/kg | ND | | 7.2 | ND | | 7.7 | ND | | 7.1 | ND | | 8 | ND | | 7.2 | ND | | 7.4 | ND | | 7.1 | ND | | 10 |
| Hexachlorobutadiene | 87-68-3 | 1200000 | ug/kg | ND | | 7.2 | ND | | 7.7 | ND | | 7.1 | ND | | 8 | ND | | 7.2 | ND | | 7.4 | ND | | 7.1 | ND | | 10 |
| Hexachlorocyclopentadiene | 77-47-4 | 3300000 | ug/kg | ND | | 35 | ND | | 38 | ND | | 35 | ND | | 39 | ND | | 35 | ND | | 37 | ND | | 35 | ND | | 51 |
| Hexachloroethane | 67-72-1 | 56000 | ug/kg | ND | | 35 | ND | | 38 | ND | | 35 | ND | | 39 | ND | | 35 | ND | | 37 | ND | | 35 | ND | | 51 |
| Indeno(1,2,3-cd)pyrene | 193-39-5 | 190000000 | ug/kg | 10 | | 7.2 | ND | | 7.7 | ND | | 7.1 | 34 | | 8 | ND | | 7.2 | ND | | 7.4 | 15 | | 7.1 | 41 | | 10 |
| Isophorone | 78-59-1 | 10000000 | ug/kg | ND | | 35 | ND | | 38 | ND | | 35 | ND | | 39 | ND | | 35 | ND | | 37 | ND | | 35 | ND | | 51 |
| 2-Methylnaphthalene | 91-57-6 | 8000000 | ug/kg | ND | | 7.2 | ND | | 7.7 | ND | | 7.1 | 3.4 | J | 8 | ND | | 7.2 | ND | | 7.4 | ND | | 7.1 | 16 | | 10 |
| Naphthalene | 91-20-3 | 7500000 | ug/kg | 2.3 | J | 7.2 | ND | | 7.7 | ND | | 7.1 | 3.9 | J | 8 | 1.7 | J | 7.2 | 1.9 | J | 7.4 | ND | | 7.1 | 30 | | 10 |
| 2-Nitroaniline[1] | 99-09-2 | 580 | ug/kg | ND | | 180 | ND | | 200 | ND | | 180 | ND | | 200 | ND | | 180 | ND | | 190 | ND | | 180 | ND | | 260 |
| 3-Nitroaniline[1] | 88-74-4 | 580 | ug/kg | ND | | 180 | ND | | 200 | ND | | 180 | ND | | 200 | ND | | 180 | ND | | 190 | ND | | 180 | ND | | 260 |
| 4-Nitroaniline[1] | 100-01-6 | 580 | ug/kg | ND | | 180 | ND | | 200 | ND | | 180 | ND | | 200 | ND | | 180 | ND | | 190 | ND | | 180 | ND | | 260 |
| Nitrobenzene | 98-95-3 | 5100000 | ug/kg | ND | | 7.2 | ND | | 7.7 | ND | | 7.1 | ND | | 8 | ND | | 7.2 | ND | | 7.4 | ND | | 7.1 | ND | | 10 |
| 2-Nitrophenol | 88-75-5 | 82000000 | ug/kg | ND | | 35 | ND | | 38 | ND | | 35 | ND | | 39 | ND | | 35 | ND | | 37 | ND | | 35 | ND | | 51 |
| 4-Nitrophenol | 100-02-7 | 6000000 | ug/kg | ND | | 180 | ND | | 200 | ND | | 180 | ND | | 200 | ND | | 180 | ND | | 190 | ND | | 180 | ND | | 260 |
| N-Nitrosodi-n-propylamine | 621-64-7 | 37000 | ug/kg | ND | | 7.2 | ND | | 7.7 | ND | | 7.1 | ND | | 8 | ND | | 7.2 | ND | | 7.4 | ND | | 7.1 | ND | | 10 |
| N-Nitrosodiphenylamine | 86-30-6 | 5500000 | ug/kg | ND | | 7.2 | ND | | 7.7 | ND | | 7.1 | ND | | 8 | ND | | 7.2 | ND | | 7.4 | ND | | 7.1 | ND | | 10 |
| Di-n-octylphthalate | 117-84-0 | 10000000 | ug/kg | ND | | 35 | ND | | 38 | ND | | 35 | ND | | 39 | ND | | 35 | ND | | 37 | ND | | 35 | ND | | 51 |
| Pentachlorophenol | 87-86-5 | 5000000 | ug/kg | ND | | 35 | ND | | 38 | ND | | 35 | ND | | 39 | ND | | 35 | ND | | 37 | ND | | 35 | ND | | 51 |
| Phenanthrene | 85-01-8 | 10000000 | ug/kg | 16 | | 7.2 | 3.9 | J | 7.7 | 2.5 | J | 7.1 | 70 | | 8 | 3.5 | J | 7.2 | 5.3 | J | 7.4 | 19 | | 7.1 | 81 | | 10 |
| Phenol | 108-95-2 | 40000000 | ug/kg | ND | | 7.2 | ND | | 7.7 | ND | | 7.1 | ND | | 8 | ND | | 7.2 | ND | | 7.4 | ND | | 7.1 | ND | | 10 |
| Pyrene | 129-00-0 | 2200000 | ug/kg | 30 | | 7.2 | ND | | 7.7 | ND | | 7.1 | 110 | | 8 | 2.6 | J | 7.2 | 4.9 | J | 7.4 | 36 | | 7.1 | 100 | | 10 |
| 2,4,5-Trichlorophenol | 95-95-4 | 190000000 | ug/kg | ND | | 35 | ND | | 38 | ND | | 35 | ND | | 39 | ND | | 35 | ND | | 37 | ND | | 35 | ND | | 51 |
| 2,4,6-Trichlorophenol | 88-06-2 | 8900000 | ug/kg | ND | | 35 | ND | | 38 | ND | | 35 | ND | | 39 | ND | | 35 | ND | | 37 | ND | | 35 | ND | | 51 |

# Table 3
## Summary of Soil Analytical Results
## Compared to Pennsylvania Non-Residential Non-Use Aquifer Soil to Groundwater MSCs
## U. S. Steel - Proposed Samax 14.2-Acre Parcel
## Fairless Hills, Pennsylvania

| | CAS No. | PADEP Non-Residential Non-Use Aquifer Soil to GW Pathway MSCs | Location ID | STP-5 | | | STP-5 | | | STP-6 | | | STP-6 | | | STP-7 | | | STP-7 | | | STP-8 | | | STP-8 | | |
|---|---|---|---|---|---|---|---|---|---|---|---|---|---|---|---|---|---|---|---|---|---|---|---|---|---|---|---|
| | | | Sample ID | 017-STP-5_1.5-2.0 | | | 018-STP-5_10.5-11 | | | 019-STP-6_1.5-2.0 | | | 020-STP-6_7.5-8 | | | 021-STP-7_1.5-2.0 | | | 022-STP-7_3.5-4.0 | | | 023-STP-8_1.5-2.0 | | | 024-STP-8_4.5-5.0 | | |
| | | | Sample Date | 10/31/07 | | | 10/31/07 | | | 10/31/07 | | | 10/31/07 | | | 10/31/07 | | | 10/31/07 | | | 10/31/07 | | | 10/31/07 | | |
| | | | Depth to GW | 11.00 | | | 11.00 | | | 8.00 | | | 8.00 | | | 4.00 | | | 4.00 | | | 5.00 | | | 5.00 | | |
| | | | Start Depth (ft) | 1.50 | | | 10.50 | | | 1.50 | | | 7.50 | | | 1.50 | | | 3.50 | | | 1.50 | | | 4.50 | | |
| | | | End Depth (ft) | 2.00 | | | 11.00 | | | 2.00 | | | 8.00 | | | 2.00 | | | 4.00 | | | 2.00 | | | 5.00 | | |
| **PCB (ug/kg)** | | | **Units** | **Result** | **Q** | **RL** | **Result** | **Q** | **RL** | **Result** | **Q** | **RL** | **Result** | **Q** | **RL** | **Result** | **Q** | **RL** | **Result** | **Q** | **RL** | **Result** | **Q** | **RL** | **Result** | **Q** | **RL** |
| Aroclor 1016 | 12674-11-2 | 200000 | ug/kg | ND | | 35 | ND | | 38 | ND | | 35 | ND | | 39 | ND | | 35 | ND | | 37 | ND | | 35 | ND | | 50 |
| Aroclor 1221 | 11104-28-2 | 2500 | ug/kg | ND | | 35 | ND | | 38 | ND | | 35 | ND | | 39 | ND | | 35 | ND | | 37 | ND | | 35 | ND | | 50 |
| Aroclor 1232 | 11141-16-5 | 2000 | ug/kg | ND | | 35 | ND | | 38 | ND | | 35 | ND | | 39 | ND | | 35 | ND | | 37 | ND | | 35 | ND | | 50 |
| Aroclor 1242 | 53469-21-9 | 62000 | ug/kg | ND | | 35 | ND | | 38 | ND | | 35 | ND | | 39 | ND | | 35 | ND | | 37 | ND | | 35 | ND | | 50 |
| Aroclor 1248 | 12672-29-6 | 67000 | ug/kg | ND | | 35 | ND | | 38 | ND | | 35 | ND | | 39 | ND | | 35 | ND | | 37 | ND | | 35 | ND | | 50 |
| Aroclor 1254 | 11097-69-1 | 280000 | ug/kg | ND | | 35 | ND | | 38 | ND | | 35 | ND | | 39 | ND | | 35 | ND | | 37 | ND | | 35 | ND | | 50 |
| Aroclor 1260 | 11096-82-5 | 1900000 | ug/kg | ND | | 35 | ND | | 38 | ND | | 35 | ND | | 39 | ND | | 35 | ND | | 37 | ND | | 35 | ND | | 50 |
| **PP Metals (mg/kg)** | | | **Units** | **Result** | **Q** | **RL** | **Result** | **Q** | **RL** | **Result** | **Q** | **RL** | **Result** | **Q** | **RL** | **Result** | **Q** | **RL** | **Result** | **Q** | **RL** | **Result** | **Q** | **RL** | **Result** | **Q** | **RL** |
| Antimony | 7440-36-0 | 27000 | mg/kg | 0.064 | B | 0.21 | 0.013 | B | 0.23 | 0.023 | B | 0.21 | 0.01 | B | 0.24 | 0.0067 | B | 0.21 | 0.011 | B | 0.22 | 0.022 | B | 0.21 | 0.49 | | 0.31 |
| Arsenic | 7440-38-2 | 150000 | mg/kg | 3.6 | J | 0.11 | 4.6 | J | 0.12 | 2.9 | J | 0.11 | 4.3 | J | 0.12 | 2.8 | J | 0.11 | 2.9 | J | 0.11 | 2.9 | J | 0.11 | 5.2 | J | 0.15 |
| Beryllium | 7440-41-7 | 190000 | mg/kg | 0.43 | | 0.11 | 0.44 | | 0.12 | 0.26 | | 0.11 | 0.55 | | 0.12 | 0.32 | | 0.11 | 0.33 | | 0.1 | 0.34 | | 0.11 | 1.8 | | 0.15 |
| Cadmium | 7440-43-9 | 38000 | mg/kg | 0.15 | | 0.11 | 0.095 | B | 0.12 | 0.083 | B | 0.11 | 0.079 | B | 0.12 | 0.088 | B | 0.11 | 0.089 | B | 0.11 | 0.11 | | 0.11 | 7.3 | | 0.15 |
| Chromium | 7440-47-3 | 190000 | mg/kg | 12.2 | J | 0.21 | 11.4 | J | 0.23 | 7.9 | J | 0.21 | 10.1 | J | 0.24 | 7.9 | J | 0.21 | 8.4 | J | 0.22 | 9 | J | 0.21 | 64.6 | J | 0.31 |
| Copper | 7440-50-8 | 190000 | mg/kg | 14.5 | | 0.21 | 9.9 | | 0.23 | 8.4 | | 0.21 | 11.8 | | 0.24 | 9.6 | | 0.21 | 9.2 | | 0.22 | 10.1 | | 0.21 | 122 | | 0.31 |
| Lead | 7439-92-1 | 190000 | mg/kg | 7.8 | | 0.11 | 8.6 | | 0.12 | 5.1 | | 0.11 | 10.8 | | 0.12 | 5.3 | | 0.11 | 7.9 | | 0.11 | 8.7 | | 0.11 | 176 | | 0.15 |
| Mercury | 7439-97-6 | 10000 | mg/kg | 0.029 | B | 0.035 | 0.024 | B | 0.038 | 0.011 | B | 0.035 | 0.028 | B | 0.039 | 0.013 | B | 0.035 | 0.013 | B | 0.037 | 0.023 | B | 0.035 | 0.73 | | 0.051 |
| Nickel | 7440-02-0 | 190000 | mg/kg | 10.7 | J | 0.11 | 12.4 | J | 0.12 | 9.3 | J | 0.11 | 12.8 | J | 0.12 | 10.5 | J | 0.11 | 9.7 | J | 0.11 | 10.5 | J | 0.11 | 40.6 | J | 0.15 |
| Selenium | 7782-49-2 | 26000 | mg/kg | 0.43 | B | 0.54 | 0.5 | B | 0.58 | 0.28 | B | 0.53 | 0.79 | | 0.59 | 0.33 | B | 0.53 | 0.39 | B | 0.55 | 0.43 | B | 0.54 | 2 | | 0.77 |
| Silver | 7440-22-4 | 84000 | mg/kg | 0.032 | B | 0.11 | ND | | 0.12 | ND | | 0.11 | 0.0034 | B | 0.12 | ND | | 0.11 | ND | | 0.11 | ND | | 0.11 | 1.2 | | 0.15 |
| Thallium | 7440-28-0 | 14000 | mg/kg | 0.052 | B | 0.11 | 0.07 | B | 0.12 | 0.029 | B | 0.11 | 0.086 | B | 0.12 | 0.044 | B | 0.11 | 0.046 | B | 0.11 | 0.054 | B | 0.11 | 0.24 | | 0.15 |
| Zinc | 7440-66-6 | 190000 | mg/kg | 34 | J | 0.54 | 30.2 | J | 0.58 | 23.4 | J | 0.53 | 31.2 | J | 0.59 | 24.8 | J | 0.53 | 24.1 | J | 0.55 | 29.2 | J | 0.54 | 1270 | J | 0.77 |
| **General Chemistry** | | | **Units** | **Result** | **Q** | **RL** | **Result** | **Q** | **RL** | **Result** | **Q** | **RL** | **Result** | **Q** | **RL** | **Result** | **Q** | **RL** | **Result** | **Q** | **RL** | **Result** | **Q** | **RL** | **Result** | **Q** | **RL** |
| Percent Solids | none | NS | percent | 93.5 | | | 86.7 | | | 94.7 | | | 84.2 | | | 93.5 | | 1 | 90.2 | | | 93.3 | | | 65 | | |

# Table 3
## Summary of Soil Analytical Results
## Compared to Pennsylvania Non-Residential Non-Use Aquifer Soil to Groundwater MSCs
## U. S. Steel - Proposed Samax 14.2-Acre Parcel
## Fairless Hills, Pennsylvania

| | CAS No. | PADEP Non-Residential Non-Use Aquifer Soil to GW Pathway MSCs | Location ID | STP-9 | | | STP-9 | | | STP-10 | | | STP-10 | | | STP-10 | | | STP-11 | | | STP-11 | | |
|---|---|---|---|---|---|---|---|---|---|---|---|---|---|---|---|---|---|---|---|---|---|---|---|---|
| | | | Sample ID | 025-STP-9_1.5-2.0 | | | 026-STP-9_5.5-6.0 | | | 028-STP-10_1.5-2.0' | | | 029-DUP-2_110107 | | | 030-STP-10_12.5-13' | | | 032-STP-11_1.5-2.0' | | | 033-STP-11_7.5-8.0' | | |
| | | | Sample Date | 10/31/07 | | | 08/31/07 | | | 11/01/07 | | | 11/01/07 | | | 11/01/07 | | | 11/01/07 | | | 11/01/07 | | |
| | | | Depth to GW | 6.00 | | | 6.00 | | | 13.00 | | | 13.00 | | | 13.00 | | | 14.50 | | | 14.50 | | |
| | | | Start Depth (ft) | 1.50 | | | 7.50 | | | 1.50 | | | 1.50 | | | 12.50 | | | 1.50 | | | 7.50 | | |
| | | | End Depth (ft) | 2.00 | | | 8.00 | | | 2.00 | | | 2.00 | | | 13.00 | | | 2.00 | | | 8.00 | | |
| **TCL Volatiles** | | | Units | Result | Q | RL | Result | Q | RL | Result | Q | RL | Result | Q | RL | Result | Q | RL | Result | Q | RL | Result | Q | RL |
| Acetone | 67-64-1 | 10000000 | ug/kg | ND | | 21 | 15 | J | 25 | ND | | 23 | ND | | 21 | 34 | | 23 | ND | | 22 | 21 | J | 24 |
| Benzene | 71-43-2 | 50000 | ug/kg | ND | | 5.3 | ND | | 6.2 | ND | | 5.7 | ND | | 5.3 | ND | | 5.9 | ND | | 5.5 | ND | | 6 |
| Bromodichloromethane | 75-27-4 | 10000 | ug/kg | ND | | 5.3 | ND | | 6.2 | ND | | 5.7 | ND | | 5.3 | ND | | 5.9 | ND | | 5.5 | ND | | 6 |
| Bromoform | 75-25-2 | 1000000 | ug/kg | ND | | 5.3 | ND | | 6.2 | ND | | 5.7 | ND | | 5.3 | ND | | 5.9 | ND | | 5.5 | ND | | 6 |
| Bromomethane | 74-83-9 | 100000 | ug/kg | ND | | 5.3 | ND | | 6.2 | ND | | 5.7 | ND | | 5.3 | ND | | 5.9 | ND | | 5.5 | ND | | 6 |
| 2-Butanone | 78-93-3 | 10000000 | ug/kg | ND | | 5.3 | ND | | 6.2 | ND | | 5.7 | ND | | 5.3 | 7.8 | | 5.9 | ND | | 5.5 | 4.4 | J | 6 |
| Carbon Disulfide | 75-15-0 | 410000 | ug/kg | ND | | 5.3 | ND | | 6.2 | ND | | 5.7 | ND | | 5.3 | ND | | 5.9 | ND | | 5.5 | ND | | 6 |
| Carbon Tetrachloride | 56-23-5 | 5000 | ug/kg | ND | | 5.3 | ND | | 6.2 | ND | | 5.7 | ND | | 5.3 | ND | | 5.9 | ND | | 5.5 | ND | | 6 |
| Chlorobenzene | 108-90-7 | 1000000 | ug/kg | ND | | 5.3 | ND | | 6.2 | ND | | 5.7 | ND | | 5.3 | ND | | 5.9 | ND | | 5.5 | ND | | 6 |
| Chloroethane | 75-00-3 | 9000000 | ug/kg | ND | | 5.3 | ND | | 6.2 | ND | | 5.7 | ND | | 5.3 | ND | | 5.9 | ND | | 5.5 | ND | | 6 |
| Chloroform | 67-66-3 | 100000 | ug/kg | ND | | 5.3 | ND | | 6.2 | ND | | 5.7 | ND | | 5.3 | ND | | 5.9 | ND | | 5.5 | ND | | 6 |
| Chloromethane | 74-87-3 | 30000 | ug/kg | ND | | 5.3 | ND | | 6.2 | ND | | 5.7 | ND | | 5.3 | ND | | 5.9 | ND | | 5.5 | ND | | 6 |
| Isopropylbenzene | 98-82-8 | 10000000 | ug/kg | ND | | 5.3 | ND | | 6.2 | ND | | 5.7 | ND | | 5.3 | ND | | 5.9 | ND | | 5.5 | 1.3 | J | 6 |
| Cyclohexane | 110-82-7 | 500 | ug/kg | ND | | 5.3 | ND | | 6.2 | ND | | 5.7 | ND | | 5.3 | ND | | 5.9 | ND | | 5.5 | ND | | 6 |
| 1,2-Dibromoethane | 106-93-4 | 500 | ug/kg | ND | | 5.3 | ND | | 6.2 | ND | | 5.7 | ND | | 5.3 | ND | | 5.9 | ND | | 5.5 | ND | | 6 |
| 1,2-Dibromo-3-chloropropane | 96-12-8 | 2000 | ug/kg | ND | | 5.3 | ND | | 6.2 | ND | | 5.7 | ND | | 5.3 | ND | | 5.9 | ND | | 5.5 | ND | | 6 |
| Dibromochloromethane | 124-48-1 | 1000000 | ug/kg | ND | | 5.3 | ND | | 6.2 | ND | | 5.7 | ND | | 5.3 | ND | | 5.9 | ND | | 5.5 | ND | | 6 |
| 1,4-Dichlorobenzene | 106-46-7 | 1000000 | ug/kg | ND | | 5.3 | ND | | 6.2 | ND | | 5.7 | ND | | 5.3 | ND | | 5.9 | ND | | 5.5 | ND | | 6 |
| 1,2-Dichlorobenzene | 95-50-1 | 6000000 | ug/kg | ND | | 5.3 | ND | | 6.2 | ND | | 5.7 | ND | | 5.3 | ND | | 5.9 | ND | | 5.5 | ND | | 6 |
| 1,3-Dichlorobenzene | 541-73-1 | 6100000 | ug/kg | ND | | 5.3 | ND | | 6.2 | ND | | 5.7 | ND | | 5.3 | ND | | 5.9 | ND | | 5.5 | ND | | 6 |
| Dichlorodifluoromethane | 75-71-8 | 10000000 | ug/kg | ND | | 5.3 | ND | | 6.2 | ND | | 5.7 | ND | | 5.3 | ND | | 5.9 | ND | | 5.5 | ND | | 6 |
| 1,1-Dichloroethane | 75-34-3 | 110000 | ug/kg | ND | | 5.3 | ND | | 6.2 | ND | | 5.7 | ND | | 5.3 | ND | | 5.9 | ND | | 5.5 | ND | | 6 |
| 1,2-Dichloroethane | 107-06-2 | 5000 | ug/kg | ND | | 5.3 | ND | | 6.2 | ND | | 5.7 | ND | | 5.3 | ND | | 5.9 | ND | | 5.5 | ND | | 6 |
| trans-1,2-Dichloroethene | 156-60-5 | 100000 | ug/kg | ND | | 5.3 | ND | | 6.2 | ND | | 5.7 | ND | | 5.3 | ND | | 5.9 | ND | | 5.5 | ND | | 6 |
| cis-1,2-Dichloroethene | 156-59-2 | 70000 | ug/kg | ND | | 5.3 | ND | | 6.2 | ND | | 5.7 | ND | | 5.3 | ND | | 5.9 | ND | | 5.5 | ND | | 6 |
| 1,1-Dichloroethene | 75-35-4 | 7000 | ug/kg | ND | | 5.3 | ND | | 6.2 | ND | | 5.7 | ND | | 5.3 | ND | | 5.9 | ND | | 5.5 | ND | | 6 |
| 1,2-Dichloropropane | 78-87-5 | 5000 | ug/kg | ND | | 5.3 | ND | | 6.2 | ND | | 5.7 | ND | | 5.3 | ND | | 5.9 | ND | | 5.5 | ND | | 6 |
| trans-1,3-Dichloropropene | 10061-02-6 | 260000 | ug/kg | ND | | 5.3 | ND | | 6.2 | ND | | 5.7 | ND | | 5.3 | ND | | 5.9 | ND | | 5.5 | ND | | 6 |
| cis-1,3-Dichloropropene | 10061-01-5 | 260000 | ug/kg | ND | | 5.3 | ND | | 6.2 | ND | | 5.7 | ND | | 5.3 | ND | | 5.9 | ND | | 5.5 | ND | | 6 |
| Ethylbenzene | 100-41-4 | 7000000 | ug/kg | ND | | 5.3 | ND | | 6.2 | ND | | 5.7 | ND | | 5.3 | ND | | 5.9 | ND | | 5.5 | ND | | 6 |
| 2-Hexanone | 591-78-6 | 500 | ug/kg | ND | | 5.3 | ND | | 6.2 | ND | | 5.7 | ND | | 5.3 | ND | | 5.9 | ND | | 5.5 | ND | | 6 |
| Methyl Acetate | 79-20-9 | 10000000 | ug/kg | ND | | 5.3 | ND | | 6.2 | ND | | 5.7 | ND | | 5.3 | ND | | 5.9 | ND | | 5.5 | ND | | 6 |
| Methyl tert-Butyl Ether | 1634-04-4 | 20000 | ug/kg | ND | | 5.3 | ND | | 6.2 | ND | | 5.7 | ND | | 5.3 | ND | | 5.9 | ND | | 5.5 | ND | | 6 |
| 4-Methyl-2-pentanone | 108-10-1 | 4100000 | ug/kg | ND | | 5.3 | ND | | 6.2 | ND | | 5.7 | ND | | 5.3 | ND | | 5.9 | ND | | 5.5 | ND | | 6 |
| Methylcyclohexane | 108-87-2 | NS | ug/kg | ND | | 5.3 | ND | | 6.2 | ND | | 5.7 | ND | | 5.3 | ND | | 5.9 | ND | | 5.5 | ND | | 6 |
| Methylene Chloride | 75-09-2 | 50000 | ug/kg | 0.94 | J | 5.3 | 2.2 | J | 6.2 | 2.4 | J | 5.7 | ND | | 5.3 | ND | | 5.9 | ND | | 5.5 | ND | | 6 |
| Styrene | 100-42-5 | 2400000 | ug/kg | ND | | 5.3 | ND | | 6.2 | ND | | 5.7 | ND | | 5.3 | ND | | 5.9 | ND | | 5.5 | ND | | 6 |
| 1,1,2,2-Tetrachloroethane | 79-34-5 | 3000 | ug/kg | ND | | 5.3 | ND | | 6.2 | ND | | 5.7 | ND | | 5.3 | ND | | 5.9 | ND | | 5.5 | ND | | 6 |
| Tetrachloroethene | 127-18-4 | 5000 | ug/kg | ND | | 5.3 | ND | | 6.2 | ND | | 5.7 | ND | | 5.3 | ND | | 5.9 | ND | | 5.5 | ND | | 6 |
| Toluene | 108-88-3 | 10000000 | ug/kg | ND | | 5.3 | ND | | 6.2 | ND | | 5.7 | ND | | 5.3 | ND | | 5.9 | ND | | 5.5 | ND | | 6 |
| Xylenes (Total) | 1330-20-7 | 10000000 | ug/kg | ND | | 16 | ND | | 18 | ND | | 17 | ND | | 16 | ND | | 18 | ND | | 17 | ND | | 18 |
| 1,1,2-Trichloro-1,2,2-trifluoroethane | 76-13-1 | 53000000 | ug/kg | ND | | 5.3 | ND | | 6.2 | ND | | 5.7 | ND | | 5.3 | ND | | 5.9 | ND | | 5.5 | ND | | 6 |
| 1,2,4-Trichlorobenzene | 120-82-1 | 10000000 | ug/kg | ND | | 5.3 | ND | | 6.2 | ND | | 5.7 | ND | | 5.3 | ND | | 5.9 | ND | | 5.5 | ND | | 6 |
| 1,1,1-Trichloroethane | 71-55-6 | 200000 | ug/kg | ND | | 5.3 | ND | | 6.2 | ND | | 5.7 | ND | | 5.3 | ND | | 5.9 | ND | | 5.5 | ND | | 6 |
| 1,1,2-Trichloroethane | 79-00-5 | 5000 | ug/kg | ND | | 5.3 | ND | | 6.2 | ND | | 5.7 | ND | | 5.3 | ND | | 5.9 | ND | | 5.5 | ND | | 6 |
| Trichloroethene | 79-01-6 | 5000 | ug/kg | ND | | 5.3 | ND | | 6.2 | ND | | 5.7 | ND | | 5.3 | ND | | 5.9 | ND | | 5.5 | ND | | 6 |
| Trichlorofluoromethane | 75-69-4 | 10000000 | ug/kg | ND | | 5.3 | ND | | 6.2 | ND | | 5.7 | ND | | 5.3 | ND | | 5.9 | ND | | 5.5 | ND | | 6 |
| Vinyl Chloride | 75-01-4 | 2000 | ug/kg | ND | | 5.3 | ND | | 6.2 | ND | | 5.7 | ND | | 5.3 | ND | | 5.9 | ND | | 5.5 | ND | | 6 |

# Table 3
## Summary of Soil Analytical Results
## Compared to Pennsylvania Non-Residential Non-Use Aquifer Soil to Groundwater MSCs
## U. S. Steel - Proposed Samax 14.2-Acre Parcel
## Fairless Hills, Pennsylvania

| | CAS No. | PADEP Non-Residential Non-Use Aquifer Soil to GW Pathway MSCs | Location ID | STP-9 | | | STP-9 | | | STP-10 | | | STP-10 | | | STP-10 | | | STP-11 | | | STP-11 | | |
|---|---|---|---|---|---|---|---|---|---|---|---|---|---|---|---|---|---|---|---|---|---|---|---|---|
| | | | Sample ID | 025-STP-9_1.5-2.0 | | | 026-STP-9_5.5-6.0 | | | 028-STP-10_1.5-2.0' | | | 029-DUP-2_110107 | | | 030-STP-10_12.5-13' | | | 032-STP-11_1.5-2.0' | | | 033-STP-11_7.5-8.0' | | |
| | | | Sample Date | 10/31/07 | | | 08/31/07 | | | 11/01/07 | | | 11/01/07 | | | 11/01/07 | | | 11/01/07 | | | 11/01/07 | | |
| | | | Depth to GW | 6.00 | | | 6.00 | | | 13.00 | | | 13.00 | | | 13.00 | | | 14.50 | | | 14.50 | | |
| | | | Start Depth (ft) | 1.50 | | | 7.50 | | | 1.50 | | | 1.50 | | | 12.50 | | | 1.50 | | | 7.50 | | |
| | | | End Depth (ft) | 2.00 | | | 8.00 | | | 2.00 | | | 2.00 | | | 13.00 | | | 2.00 | | | 8.00 | | |
| **TCL Semivolatiles** | | | Units | Result | Q | RL | Result | Q | RL | Result | Q | RL | Result | Q | RL | Result | Q | RL | Result | Q | RL | Result | Q | RL |
| Acenaphthene | 83-32-9 | 4700000 | ug/kg | 1.8 | J | 7.1 | ND | | 7.7 | ND | | 7.4 | ND | | 7.4 | ND | | 7.7 | ND | | 15 | ND | | 8 |
| Acenaphthylene | 208-96-8 | 18000000 | ug/kg | 5.4 | J | 7.1 | ND | | 7.7 | 2.8 | J | 7.4 | 8.5 | | 7.4 | ND | | 7.7 | ND | | 15 | ND | | 8 |
| Acetaphenone | 98-86-2 | 1000000 | ug/kg | 3.1 | J | 35 | 3.3 | J | 38 | ND | | 36 | ND | | 37 | ND | | 38 | ND | | 72 | ND | | 40 |
| Anthracene | 120-12-7 | 350000 | ug/kg | 6.3 | J | 7.1 | ND | | 7.7 | ND | | 7.4 | 6.4 | J | 7.4 | ND | | 7.7 | ND | | 15 | ND | | 8 |
| Atrazine[1] | 1912-24-9 | 300 | ug/kg | ND | | 35 | ND | | 38 | ND | | 36 | ND | | 37 | ND | | 38 | ND | | 72 | ND | | 40 |
| Benzaldehyde | 100-52-7 | NS | ug/kg | ND | | 35 | ND | | 38 | ND | | 36 | ND | | 37 | ND | | 38 | ND | | 72 | ND | | 40 |
| Benzo(a)anthracene | 56-55-3 | 960000 | ug/kg | 18 | | 7.1 | 6.3 | J | 7.7 | 5.9 | J | 7.4 | 19 | | 7.4 | ND | | 7.7 | 11 | J | 15 | ND | | 8 |
| Benzo(a)pyrene | 50-32-8 | 860000 | ug/kg | 18 | | 7.1 | 7.2 | J | 7.7 | 6.2 | J | 7.4 | 18 | | 7.4 | 3.1 | J | 7.7 | 19 | | 15 | ND | | 8 |
| Benzo(b)fluoranthene | 205-99-2 | 170000 | ug/kg | 26 | | 7.1 | 9.3 | | 7.7 | 7.6 | | 7.4 | 28 | | 7.4 | ND | | 7.7 | 23 | | 15 | ND | | 8 |
| Benzo(g,h,i)perylene | 191-24-2 | 180000 | ug/kg | 16 | | 7.1 | 5.9 | J | 7.7 | 5.8 | J | 7.4 | 17 | | 7.4 | 2.7 | J | 7.7 | 16 | | 15 | ND | | 8 |
| Benzo(k)fluoranthene | 207-08-9 | 610000 | ug/kg | 6 | J | 7.1 | 3.7 | J | 7.7 | 3.5 | J | 7.4 | 7.2 | J | 7.4 | ND | | 7.7 | 8.5 | J | 15 | ND | | 8 |
| 1,1'-Biphenyl | 92-52-4 | 3100000 | ug/kg | 1.9 | J | 35 | ND | | 38 | ND | | 36 | 13 | J | 37 | ND | | 38 | ND | | 72 | ND | | 40 |
| bis(2-Chloroethoxy) methane | 111-91-1 | 500 | ug/kg | ND | | 35 | ND | | 38 | ND | | 36 | ND | | 37 | ND | | 38 | ND | | 72 | ND | | 40 |
| bis(2-Chloroethyl) ether | 111-44-4 | 5500 | ug/kg | ND | | 7.1 | ND | | 7.7 | ND | | 7.4 | ND | | 7.4 | ND | | 7.7 | ND | | 15 | ND | | 8 |
| 2,2'-oxybis(1-Chloropropane) | 108-60-1 | 3000000 | ug/kg | ND | | 7.1 | ND | | 7.7 | ND | | 7.4 | ND | | 7.4 | ND | | 7.7 | ND | | 15 | ND | | 8 |
| bis-(2-Ethylhexyl)phthalate | 117-81-7 | 6300000 | ug/kg | 8.6 | J | 35 | 6.3 | J | 38 | ND | | 36 | 8.3 | J | 37 | 11 | J | 38 | 33 | J | 72 | 9.8 | J | 40 |
| 4-Bromophenyl-phenylether | 101-55-3 | 500 | ug/kg | ND | | 35 | ND | | 38 | ND | | 36 | ND | | 37 | ND | | 38 | ND | | 72 | ND | | 40 |
| Butylbenzylphthalate | 85-68-7 | 10000000 | ug/kg | ND | | 35 | ND | | 38 | 3.3 | J | 36 | 6.1 | J | 37 | 11 | J | 38 | ND | | 72 | 9 | J | 40 |
| Caprolactam | 105-60-2 | NS | ug/kg | 9.2 | J | 35 | ND | | 38 | ND | | 36 | ND | | 37 | ND | | 38 | ND | | 72 | ND | | 40 |
| Carbazole | 86-74-8 | 760000 | ug/kg | 1.9 | J | 7.1 | ND | | 7.7 | ND | | 7.4 | 3 | J | 7.4 | ND | | 7.7 | ND | | 15 | ND | | 8 |
| 4-Chloro-3-methylphenol | 59-50-7 | 110000 | ug/kg | ND | | 35 | ND | | 38 | ND | | 36 | ND | | 37 | ND | | 38 | ND | | 72 | ND | | 40 |
| 4-Chloroaniline | 106-47-8 | 52000 | ug/kg | ND | | 35 | ND | | 38 | ND | | 36 | ND | | 37 | ND | | 38 | ND | | 72 | ND | | 40 |
| 2-Chloronapthalene | 91-58-7 | 18000000 | ug/kg | ND | | 7.1 | ND | | 7.7 | ND | | 7.4 | ND | | 7.4 | ND | | 7.7 | ND | | 15 | ND | | 8 |
| 2-Chlorophenol | 95-57-8 | 4400 | ug/kg | ND | | 35 | ND | | 38 | ND | | 36 | ND | | 37 | ND | | 38 | ND | | 72 | ND | | 40 |
| 4-Chlorophenyl-phenylether | 7005-72-3 | 500 | ug/kg | ND | | 35 | ND | | 38 | ND | | 36 | ND | | 37 | ND | | 38 | ND | | 72 | ND | | 40 |
| Chrysene | 218-01-9 | 230000 | ug/kg | 21 | | 7.1 | 7.6 | J | 7.7 | 10 | | 7.4 | 35 | | 7.4 | ND | | 7.7 | 17 | | 15 | ND | | 8 |
| 2-Methylphenol | 95-48-7 | 10000000 | ug/kg | ND | | 35 | ND | | 38 | ND | | 36 | ND | | 37 | ND | | 38 | ND | | 72 | ND | | 40 |
| 4-Methylphenol | 106-44-5 | 51000000 | ug/kg | ND | | 35 | ND | | 38 | ND | | 36 | ND | | 37 | ND | | 38 | ND | | 72 | ND | | 40 |
| Dibenzo(a,h)anthracene | 53-70-3 | 270000 | ug/kg | 3.7 | J | 7.1 | ND | | 7.7 | ND | | 7.4 | ND | | 7.4 | ND | | 7.7 | ND | | 15 | ND | | 8 |
| Dibenzofuran | 132-64-9 | 500 | ug/kg | 2.8 | J | 35 | ND | | 38 | ND | | 36 | 19 | J | 37 | ND | | 38 | ND | | 72 | ND | | 40 |
| 3,3'-Dichlorobenzidine | 91-94-1 | 17000000 | ug/kg | ND | | 35 | ND | | 38 | ND | | 36 | ND | | 37 | ND | | 38 | ND | | 72 | ND | | 40 |
| 2,4-Dichlorophenol | 120-83-2 | 2000000 | ug/kg | ND | | 7.1 | ND | | 7.7 | ND | | 7.4 | ND | | 7.4 | ND | | 7.7 | ND | | 15 | ND | | 8 |
| Diethylphthalate | 84-66-2 | 10000000 | ug/kg | ND | | 35 | ND | | 38 | ND | | 36 | ND | | 37 | ND | | 38 | ND | | 72 | ND | | 40 |
| 2,4-Dimethylphenol | 105-67-9 | 10000000 | ug/kg | ND | | 35 | ND | | 38 | ND | | 36 | ND | | 37 | ND | | 38 | ND | | 72 | ND | | 40 |
| Dimethylphthalate | 131-11-3 | 500 | ug/kg | ND | | 35 | ND | | 38 | ND | | 36 | ND | | 37 | ND | | 38 | ND | | 72 | ND | | 40 |
| Di-n-butylphthalate | 84-74-2 | 10000000 | ug/kg | ND | | 35 | ND | | 38 | ND | | 36 | 9.1 | J | 37 | 7.9 | J | 38 | ND | | 72 | 8.3 | J | 40 |
| 4,6-Dinitro-2-methylphenol[1] | 534-52-1 | 500 | ug/kg | ND | | 180 | ND | | 200 | ND | | 190 | ND | | 190 | ND | | 200 | ND | | 370 | ND | | 200 |
| 2,4-Dinitrophenol | 51-28-5 | 41000 | ug/kg | ND | | 180 | ND | | 200 | ND | | 190 | ND | | 190 | ND | | 200 | ND | | 370 | ND | | 200 |
| 2,4-Dinitrotoluene | 121-14-2 | 840000 | ug/kg | ND | | 35 | ND | | 38 | ND | | 36 | ND | | 37 | ND | | 38 | ND | | 72 | ND | | 40 |
| 2,6-Dinitrotoluene | 606-20-2 | 10000000 | ug/kg | ND | | 35 | ND | | 38 | ND | | 36 | ND | | 37 | ND | | 38 | ND | | 72 | ND | | 40 |
| Fluoranthene | 206-44-0 | 3200000 | ug/kg | 31 | | 7.1 | 14 | | 7.7 | 8.9 | | 7.4 | 32 | | 7.4 | 4.6 | J | 7.7 | 26 | | 15 | 2.9 | J | 8 |
| Fluorene | 86-73-7 | 3800000 | ug/kg | 3.2 | J | 7.1 | ND | | 7.7 | ND | | 7.4 | ND | | 7.4 | ND | | 7.7 | ND | | 15 | ND | | 8 |
| Hexachlorobenzene | 118-74-1 | 5800 | ug/kg | ND | | 7.1 | ND | | 7.7 | ND | | 7.4 | ND | | 7.4 | ND | | 7.7 | ND | | 15 | ND | | 8 |
| Hexachlorobutadiene | 87-68-3 | 1200000 | ug/kg | ND | | 7.1 | ND | | 7.7 | ND | | 7.4 | ND | | 7.4 | ND | | 7.7 | ND | | 15 | ND | | 8 |
| Hexachlorocyclopentadiene | 77-47-4 | 3300000 | ug/kg | ND | | 35 | ND | | 38 | ND | | 36 | ND | | 37 | ND | | 38 | ND | | 72 | ND | | 40 |
| Hexachloroethane | 67-72-1 | 56000 | ug/kg | ND | | 35 | ND | | 38 | ND | | 36 | ND | | 37 | ND | | 38 | ND | | 72 | ND | | 40 |
| Indeno(1,2,3-cd)pyrene | 193-39-5 | 190000000 | ug/kg | 13 | | 7.1 | 4.6 | J | 7.7 | 4.6 | J | 7.4 | 14 | | 7.4 | ND | | 7.7 | 11 | J | 15 | ND | | 8 |
| Isophorone | 78-59-1 | 10000000 | ug/kg | ND | | 35 | ND | | 38 | ND | | 36 | ND | | 37 | ND | | 38 | ND | | 72 | ND | | 40 |
| 2-Methylnaphthalene | 91-57-6 | 8000000 | ug/kg | 3.9 | J | 7.1 | ND | | 7.7 | 7.7 | | 7.4 | 64 | | 7.4 | ND | | 7.7 | ND | | 15 | 22 | | 8 |
| Naphthalene | 91-20-3 | 7500000 | ug/kg | 7.3 | | 7.1 | ND | | 7.7 | 6 | J | 7.4 | 34 | | 7.4 | ND | | 7.7 | ND | | 15 | 230 | | 8 |
| 2-Nitroaniline[1] | 99-09-2 | 580 | ug/kg | ND | | 180 | ND | | 200 | ND | | 190 | ND | | 190 | ND | | 200 | ND | | 370 | ND | | 200 |
| 3-Nitroaniline[1] | 88-74-4 | 580 | ug/kg | ND | | 180 | ND | | 200 | ND | | 190 | ND | | 190 | ND | | 200 | ND | | 370 | ND | | 200 |
| 4-Nitroaniline[1] | 100-01-6 | 580 | ug/kg | ND | | 180 | ND | | 200 | ND | | 190 | ND | | 190 | ND | | 200 | ND | | 370 | ND | | 200 |
| Nitrobenzene | 98-95-3 | 5100000 | ug/kg | ND | | 7.1 | ND | | 7.7 | ND | | 7.4 | ND | | 7.4 | ND | | 7.7 | ND | | 15 | ND | | 8 |
| 2-Nitrophenol | 88-75-5 | 82000000 | ug/kg | ND | | 35 | ND | | 38 | ND | | 36 | ND | | 37 | ND | | 38 | ND | | 72 | ND | | 40 |
| 4-Nitrophenol | 100-02-7 | 6000000 | ug/kg | ND | | 180 | ND | | 200 | ND | | 190 | ND | | 190 | ND | | 200 | ND | | 370 | ND | | 200 |
| N-Nitrosodi-n-propylamine | 621-64-7 | 37000 | ug/kg | ND | | 7.1 | ND | | 7.7 | ND | | 7.4 | ND | | 7.4 | ND | | 7.7 | ND | | 15 | ND | | 8 |
| N-Nitrosodiphenylamine | 86-30-6 | 5500000 | ug/kg | ND | | 7.1 | ND | | 7.7 | ND | | 7.4 | ND | | 7.4 | ND | | 7.7 | ND | | 15 | ND | | 8 |
| Di-n-octylphthalate | 117-84-0 | 10000000 | ug/kg | ND | | 35 | ND | | 38 | ND | | 36 | ND | | 37 | ND | | 38 | ND | | 72 | ND | | 40 |
| Pentachlorophenol | 87-86-5 | 5000000 | ug/kg | ND | | 35 | ND | | 38 | ND | | 36 | ND | | 37 | ND | | 38 | ND | | 72 | ND | | 40 |
| Phenanthrene | 85-01-8 | 10000000 | ug/kg | 22 | | 7.1 | 9.1 | | 7.7 | 13 | | 7.4 | 67 | | 7.4 | 4.6 | J | 7.7 | 12 | J | 15 | ND | | 8 |
| Phenol | 108-95-2 | 40000000 | ug/kg | ND | | 7.1 | ND | | 7.7 | ND | | 7.4 | ND | | 7.4 | ND | | 7.7 | ND | | 15 | ND | | 8 |
| Pyrene | 129-00-0 | 2200000 | ug/kg | 28 | | 7.1 | 12 | | 7.7 | 11 | | 7.4 | 36 | | 7.4 | 4.5 | J | 7.7 | 21 | | 15 | 2.4 | J | 8 |
| 2,4,5-Trichlorophenol | 95-95-4 | 190000000 | ug/kg | ND | | 35 | ND | | 38 | ND | | 36 | ND | | 37 | ND | | 38 | ND | | 72 | ND | | 40 |
| 2,4,6-Trichlorophenol | 88-06-2 | 8900000 | ug/kg | ND | | 35 | ND | | 38 | ND | | 36 | ND | | 37 | ND | | 38 | ND | | 72 | ND | | 40 |

# Table 3
## Summary of Soil Analytical Results
## Compared to Pennsylvania Non-Residential Non-Use Aquifer Soil to Groundwater MSCs
## U. S. Steel - Proposed Samax 14.2-Acre Parcel
## Fairless Hills, Pennsylvania

| | CAS No. | PADEP Non-Residential Non-Use Aquifer Soil to GW Pathway MSCs | Location ID | STP-9 | | | STP-9 | | | STP-10 | | | STP-10 | | | STP-10 | | | STP-11 | | | STP-11 | | |
|---|---|---|---|---|---|---|---|---|---|---|---|---|---|---|---|---|---|---|---|---|---|---|---|---|
| | | | Sample ID | 025-STP-9_1.5-2.0 | | | 026-STP-9_5.5-6.0 | | | 028-STP-10_1.5-2.0' | | | 029-DUP-2_110107 | | | 030-STP-10_12.5-13' | | | 032-STP-11_1.5-2.0' | | | 033-STP-11_7.5-8.0' | | |
| | | | Sample Date | 10/31/07 | | | 08/31/07 | | | 11/01/07 | | | 11/01/07 | | | 11/01/07 | | | 11/01/07 | | | 11/01/07 | | |
| | | | Depth to GW | 6.00 | | | 6.00 | | | 13.00 | | | 13.00 | | | 13.00 | | | 14.50 | | | 14.50 | | |
| | | | Start Depth (ft) | 1.50 | | | 7.50 | | | 1.50 | | | 1.50 | | | 12.50 | | | 1.50 | | | 7.50 | | |
| | | | End Depth (ft) | 2.00 | | | 8.00 | | | 2.00 | | | 2.00 | | | 13.00 | | | 2.00 | | | 8.00 | | |
| **PCB (ug/kg)** | | | **Units** | **Result** | **Q** | **RL** | **Result** | **Q** | **RL** | **Result** | **Q** | **RL** | **Result** | **Q** | **RL** | **Result** | **Q** | **RL** | **Result** | **Q** | **RL** | **Result** | **Q** | **RL** |
| Aroclor 1016 | 12674-11-2 | 200000 | ug/kg | ND | | 35 | ND | | 38 | ND | | 36 | ND | | 37 | ND | | 38 | ND | | 36 | ND | | 40 |
| Aroclor 1221 | 11104-28-2 | 2500 | ug/kg | ND | | 35 | ND | | 38 | ND | | 36 | ND | | 37 | ND | | 38 | ND | | 36 | ND | | 40 |
| Aroclor 1232 | 11141-16-5 | 2000 | ug/kg | ND | | 35 | ND | | 38 | ND | | 36 | ND | | 37 | ND | | 38 | ND | | 36 | ND | | 40 |
| Aroclor 1242 | 53469-21-9 | 62000 | ug/kg | ND | | 35 | ND | | 38 | ND | | 36 | ND | | 37 | ND | | 38 | ND | | 36 | ND | | 40 |
| Aroclor 1248 | 12672-29-6 | 67000 | ug/kg | ND | | 35 | ND | | 38 | ND | | 36 | ND | | 37 | ND | | 38 | ND | | 36 | ND | | 40 |
| Aroclor 1254 | 11097-69-1 | 280000 | ug/kg | ND | | 35 | ND | | 38 | ND | | 36 | ND | | 37 | ND | | 38 | 35 | J | 36 | ND | | 40 |
| Aroclor 1260 | 11096-82-5 | 1900000 | ug/kg | ND | | 35 | ND | | 38 | ND | | 36 | ND | | 37 | ND | | 38 | ND | | 36 | ND | | 40 |
| **PP Metals (mg/kg)** | | | **Units** | **Result** | **Q** | **RL** | **Result** | **Q** | **RL** | **Result** | **Q** | **RL** | **Result** | **Q** | **RL** | **Result** | **Q** | **RL** | **Result** | **Q** | **RL** | **Result** | **Q** | **RL** |
| Antimony | 7440-36-0 | 27000 | mg/kg | 0.028 | B | 0.21 | 0.021 | B | 0.23 | 0.047 | B | 0.22 | 0.035 | B | 0.22 | 0.014 | B | 0.23 | 0.028 | B | 0.22 | 0.011 | B | 0.24 |
| Arsenic | 7440-38-2 | 150000 | mg/kg | 2.9 | J | 0.11 | 4.6 | J | 0.12 | 3 | | 0.11 | 3.5 | | 0.11 | 6.4 | | 0.11 | 4.7 | | 0.11 | 4.3 | | 0.12 |
| Beryllium | 7440-41-7 | 190000 | mg/kg | 0.36 | | 0.11 | 0.51 | | 0.12 | 0.35 | | 0.11 | 0.43 | | 0.11 | 0.56 | | 0.11 | 0.34 | | 0.11 | 0.48 | | 0.12 |
| Cadmium | 7440-43-9 | 38000 | mg/kg | 0.1 | B | 0.11 | 0.097 | B | 0.12 | 0.13 | | 0.11 | 0.29 | | 0.11 | 0.13 | | 0.11 | 0.14 | | 0.11 | 0.14 | | 0.12 |
| Chromium | 7440-47-3 | 190000 | mg/kg | 8.3 | J | 0.21 | 11.1 | J | 0.23 | 24.9 | | 0.22 | 465 | | 0.22 | 10.9 | | 0.23 | 8.3 | | 0.22 | 10 | | 0.24 |
| Copper | 7440-50-8 | 190000 | mg/kg | 11.1 | | 0.21 | 12.4 | | 0.23 | 12.4 | J | 0.22 | 13.8 | J | 0.22 | 12.5 | J | 0.23 | 12.2 | J | 0.22 | 12.7 | J | 0.24 |
| Lead | 7439-92-1 | 190000 | mg/kg | 6.9 | | 0.11 | 11.4 | | 0.12 | 9.5 | | 0.11 | 15.9 | | 0.11 | 13.6 | | 0.11 | 9.4 | | 0.11 | 11.8 | | 0.12 |
| Mercury | 7439-97-6 | 10000 | mg/kg | 0.021 | B | 0.035 | 0.032 | B | 0.038 | 0.033 | B | 0.036 | 0.041 | | 0.037 | 0.23 | | 0.038 | 0.031 | B | 0.036 | 0.018 | B | 0.04 |
| Nickel | 7440-02-0 | 190000 | mg/kg | 10.1 | J | 0.11 | 13.7 | J | 0.12 | 12.2 | | 0.11 | 10.2 | | 0.11 | 13.5 | | 0.11 | 11.3 | | 0.11 | 14.4 | | 0.12 |
| Selenium | 7782-49-2 | 26000 | mg/kg | 0.34 | B | 0.53 | 0.55 | B | 0.58 | 0.19 | B | 0.55 | 0.3 | B | 0.55 | 0.53 | B | 0.57 | 0.21 | B | 0.55 | 0.45 | B | 0.6 |
| Silver | 7440-22-4 | 84000 | mg/kg | ND | | 0.11 | ND | | 0.12 | 0.015 | B | 0.11 | 0.033 | B | 0.11 | 0.024 | B | 0.11 | 0.015 | B | 0.11 | 0.023 | B | 0.12 |
| Thallium | 7440-28-0 | 14000 | mg/kg | 0.05 | B | 0.11 | 0.082 | B | 0.12 | 0.052 | B | 0.11 | 0.061 | B | 0.11 | 0.11 | | 0.11 | 0.05 | B | 0.11 | 0.089 | B | 0.12 |
| Zinc | 7440-66-6 | 190000 | mg/kg | 28.3 | J | 0.53 | 34.4 | J | 0.58 | 41.8 | J | 0.55 | 59.9 | J | 0.55 | 38 | J | 0.57 | 34.8 | J | 0.55 | 36.8 | J | 0.6 |
| **General Chemistry** | | | **Units** | **Result** | **Q** | **RL** | **Result** | **Q** | **RL** | **Result** | **Q** | **RL** | **Result** | **Q** | **RL** | **Result** | **Q** | **RL** | **Result** | **Q** | **RL** | **Result** | **Q** | **RL** |
| Percent Solids | none | NS | percent | 94.9 | | | 86.8 | | | 90.7 | | | 90.2 | | | 87 | | | 91.7 | | | 83.5 | | |

# Table 3
## Summary of Soil Analytical Results
## Compared to Pennsylvania Non-Residential Non-Use Aquifer Soil to Groundwater MSCs
## U. S. Steel - Proposed Samax 14.2-Acre Parcel
## Fairless Hills, Pennsylvania

| | CAS No. | PADEP Non-Residential Non-Use Aquifer Soil to GW Pathway MSCs | Location ID | STP-12 | | | STP-12 | | | STP-13 | | | STP-13 | | | STP-14 | | | STP-14 | | | STP-15 | | | STP-15 | | |
|---|---|---|---|---|---|---|---|---|---|---|---|---|---|---|---|---|---|---|---|---|---|---|---|---|---|---|---|
| | | | Sample ID | 034-STP-12_1.5-2.0' | | | 035-STP-12_7.5-8.0' | | | 003-STP-13_1.5-2.0 | | | 004-STP-13_9.5-10 | | | 012-STP-14_1.5-2.0 | | | 013-STP-14_11.5-12 | | | 036-STP-15_1.5-2.0' | | | 037-STP-15_8.5-9.0' | | |
| | | | Sample Date | 11/01/07 | | | 11/01/07 | | | 10/30/07 | | | 10/30/07 | | | 10/31/07 | | | 10/31/07 | | | 11/01/07 | | | 11/01/07 | | |
| | | | Depth to GW | 8.00 | | | 8.00 | | | 10.00 | | | 10.00 | | | 12.00 | | | 12.00 | | | 9.00 | | | 9.00 | | |
| | | | Start Depth (ft) | 1.50 | | | 7.50 | | | 1.50 | | | 9.50 | | | 1.50 | | | 11.50 | | | 1.50 | | | 8.50 | | |
| | | | End Depth (ft) | 2.00 | | | 8.00 | | | 2.00 | | | 10.00 | | | 2.00 | | | 12.00 | | | 2.00 | | | 9.00 | | |
| **TCL Volatiles** | | | Units | Result | Q | RL | Result | Q | RL | Result | Q | RL | Result | Q | RL | Result | Q | RL | Result | Q | RL | Result | Q | RL | Result | Q | RL |
| Acetone | 67-64-1 | 10000000 | ug/kg | ND | | 22 | 3000 | J B | 5600 | ND | | 20 | ND | | 25 | ND | | 20 | 7.8 | J | 21 | ND | | 24 | ND | | 24 |
| Benzene | 71-43-2 | 50000 | ug/kg | ND | | 5.5 | ND | | 1400 | ND | | 5.1 | ND | | 6.2 | ND | | 5 | ND | | 5.4 | ND | | 6 | ND | | 5.9 |
| Bromodichloromethane | 75-27-4 | 10000 | ug/kg | ND | | 5.5 | ND | | 1400 | ND | | 5.1 | ND | | 6.2 | ND | | 5 | ND | | 5.4 | ND | | 6 | ND | | 5.9 |
| Bromoform | 75-25-2 | 1000000 | ug/kg | ND | | 5.5 | ND | | 1400 | ND | | 5.1 | ND | | 6.2 | ND | | 5 | ND | | 5.4 | ND | | 6 | ND | | 5.9 |
| Bromomethane | 74-83-9 | 100000 | ug/kg | ND | | 5.5 | ND | | 1400 | ND | | 5.1 | ND | | 6.2 | ND | | 5 | ND | | 5.4 | ND | | 6 | ND | | 5.9 |
| 2-Butanone | 78-93-3 | 10000000 | ug/kg | ND | | 5.5 | ND | | 1400 | ND | | 5.1 | ND | | 6.2 | ND | | 5 | ND | | 5.4 | ND | | 6 | ND | | 5.9 |
| Carbon Disulfide | 75-15-0 | 410000 | ug/kg | ND | | 5.5 | ND | | 1400 | ND | | 5.1 | ND | | 6.2 | ND | | 5 | ND | | 5.4 | ND | | 6 | ND | | 5.9 |
| Carbon Tetrachloride | 56-23-5 | 5000 | ug/kg | ND | | 5.5 | ND | | 1400 | ND | | 5.1 | ND | | 6.2 | ND | | 5 | ND | | 5.4 | ND | | 6 | ND | | 5.9 |
| Chlorobenzene | 108-90-7 | 1000000 | ug/kg | ND | | 5.5 | ND | | 1400 | ND | | 5.1 | ND | | 6.2 | ND | | 5 | ND | | 5.4 | ND | | 6 | ND | | 5.9 |
| Chloroethane | 75-00-3 | 9000000 | ug/kg | ND | | 5.5 | ND | | 1400 | ND | | 5.1 | ND | | 6.2 | ND | | 5 | ND | | 5.4 | ND | | 6 | ND | | 5.9 |
| Chloroform | 67-66-3 | 100000 | ug/kg | ND | | 5.5 | ND | | 1400 | ND | | 5.1 | ND | | 6.2 | ND | | 5 | ND | | 5.4 | ND | | 6 | ND | | 5.9 |
| Chloromethane | 74-87-3 | 30000 | ug/kg | ND | | 5.5 | ND | | 1400 | ND | | 5.1 | ND | | 6.2 | ND | | 5 | ND | | 5.4 | ND | | 6 | ND | | 5.9 |
| Isopropylbenzene | 98-82-8 | 10000000 | ug/kg | ND | | 5.5 | 21000 | | 1400 | ND | | 5.1 | ND | | 6.2 | ND | | 5 | ND | | 5.4 | ND | | 6 | ND | | 5.9 |
| Cyclohexane | 110-82-7 | 500 | ug/kg | ND | | 5.5 | ND | | 1400 | ND | | 5.1 | ND | | 6.2 | ND | | 5 | ND | | 5.4 | ND | | 6 | ND | | 5.9 |
| 1,2-Dibromoethane | 106-93-4 | 500 | ug/kg | ND | | 5.5 | ND | | 1400 | ND | | 5.1 | ND | | 6.2 | ND | | 5 | ND | | 5.4 | ND | | 6 | ND | | 5.9 |
| 1,2-Dibromo-3-chloropropane | 96-12-8 | 2000 | ug/kg | ND | | 5.5 | ND | | 1400 | ND | | 5.1 | ND | | 6.2 | ND | | 5 | ND | | 5.4 | ND | | 6 | ND | | 5.9 |
| Dibromochloromethane | 124-48-1 | 1000000 | ug/kg | ND | | 5.5 | ND | | 1400 | ND | | 5.1 | ND | | 6.2 | ND | | 5 | ND | | 5.4 | ND | | 6 | ND | | 5.9 |
| 1,4-Dichlorobenzene | 106-46-7 | 1000000 | ug/kg | ND | | 5.5 | ND | | 1400 | ND | | 5.1 | ND | | 6.2 | ND | | 5 | ND | | 5.4 | ND | | 6 | ND | | 5.9 |
| 1,2-Dichlorobenzene | 95-50-1 | 6000000 | ug/kg | ND | | 5.5 | ND | | 1400 | ND | | 5.1 | ND | | 6.2 | ND | | 5 | ND | | 5.4 | ND | | 6 | ND | | 5.9 |
| 1,3-Dichlorobenzene | 541-73-1 | 6100000 | ug/kg | ND | | 5.5 | ND | | 1400 | ND | | 5.1 | ND | | 6.2 | ND | | 5 | ND | | 5.4 | ND | | 6 | ND | | 5.9 |
| Dichlorodifluoromethane | 75-71-8 | 10000000 | ug/kg | ND | | 5.5 | ND | | 1400 | ND | | 5.1 | ND | | 6.2 | ND | | 5 | ND | | 5.4 | ND | | 6 | ND | | 5.9 |
| 1,1-Dichloroethane | 75-34-3 | 110000 | ug/kg | ND | | 5.5 | ND | | 1400 | ND | | 5.1 | ND | | 6.2 | ND | | 5 | ND | | 5.4 | ND | | 6 | ND | | 5.9 |
| 1,2-Dichloroethane | 107-06-2 | 5000 | ug/kg | ND | | 5.5 | ND | | 1400 | ND | | 5.1 | ND | | 6.2 | ND | | 5 | ND | | 5.4 | ND | | 6 | ND | | 5.9 |
| trans-1,2-Dichloroethene | 156-60-5 | 100000 | ug/kg | ND | | 5.5 | ND | | 1400 | ND | | 5.1 | ND | | 6.2 | ND | | 5 | ND | | 5.4 | ND | | 6 | ND | | 5.9 |
| cis-1,2-Dichloroethene | 156-59-2 | 70000 | ug/kg | ND | | 5.5 | ND | | 1400 | ND | | 5.1 | ND | | 6.2 | ND | | 5 | ND | | 5.4 | ND | | 6 | ND | | 5.9 |
| 1,1-Dichloroethene | 75-35-4 | 7000 | ug/kg | ND | | 5.5 | ND | | 1400 | ND | | 5.1 | ND | | 6.2 | ND | | 5 | ND | | 5.4 | ND | | 6 | ND | | 5.9 |
| 1,2-Dichloropropane | 78-87-5 | 5000 | ug/kg | ND | | 5.5 | ND | | 1400 | ND | | 5.1 | ND | | 6.2 | ND | | 5 | ND | | 5.4 | ND | | 6 | ND | | 5.9 |
| trans-1,3-Dichloropropene | 10061-02-6 | 260000 | ug/kg | ND | | 5.5 | ND | | 1400 | ND | | 5.1 | ND | | 6.2 | ND | | 5 | ND | | 5.4 | ND | | 6 | ND | | 5.9 |
| cis-1,3-Dichloropropene | 10061-01-5 | 260000 | ug/kg | ND | | 5.5 | ND | | 1400 | ND | | 5.1 | ND | | 6.2 | ND | | 5 | ND | | 5.4 | ND | | 6 | ND | | 5.9 |
| Ethylbenzene | 100-41-4 | 7000000 | ug/kg | ND | | 5.5 | 760 | J | 1400 | ND | | 5.1 | ND | | 6.2 | ND | | 5 | ND | | 5.4 | ND | | 6 | ND | | 5.9 |
| 2-Hexanone | 591-78-6 | 500 | ug/kg | ND | | 5.5 | ND | | 1400 | ND | | 5.1 | ND | | 6.2 | ND | | 5 | ND | | 5.4 | ND | | 6 | ND | | 5.9 |
| Methyl Acetate | 79-20-9 | 10000000 | ug/kg | ND | | 5.5 | ND | | 1400 | ND | | 5.1 | ND | | 6.2 | ND | | 5 | ND | | 5.4 | ND | | 6 | ND | | 5.9 |
| Methyl tert-Butyl Ether | 1634-04-4 | 20000 | ug/kg | ND | | 5.5 | ND | | 1400 | ND | | 5.1 | ND | | 6.2 | ND | | 5 | ND | | 5.4 | ND | | 6 | ND | | 5.9 |
| 4-Methyl-2-pentanone | 108-10-1 | 4100000 | ug/kg | ND | | 5.5 | ND | | 1400 | ND | | 5.1 | ND | | 6.2 | ND | | 5 | ND | | 5.4 | ND | | 6 | ND | | 5.9 |
| Methylcyclohexane | 108-87-2 | NS | ug/kg | ND | | 5.5 | 430 | J | 1400 | ND | | 5.1 | ND | | 6.2 | ND | | 5 | ND | | 5.4 | ND | | 6 | ND | | 5.9 |
| Methylene Chloride | 75-09-2 | 50000 | ug/kg | 0.87 | J | 5.5 | ND | | 1400 | 2.5 | J B | 5.1 | 1.8 | J B | 6.2 | 1.3 | J | 5 | 1 | J | 5.4 | ND | | 6 | ND | | 5.9 |
| Styrene | 100-42-5 | 2400000 | ug/kg | ND | | 5.5 | ND | | 1400 | ND | | 5.1 | ND | | 6.2 | ND | | 5 | ND | | 5.4 | ND | | 6 | ND | | 5.9 |
| 1,1,2,2-Tetrachloroethane | 79-34-5 | 3000 | ug/kg | ND | | 5.5 | ND | | 1400 | ND | | 5.1 | ND | | 6.2 | ND | | 5 | ND | | 5.4 | ND | | 6 | ND | | 5.9 |
| Tetrachloroethene | 127-18-4 | 5000 | ug/kg | ND | | 5.5 | ND | | 1400 | ND | | 5.1 | ND | | 6.2 | ND | | 5 | ND | | 5.4 | ND | | 6 | ND | | 5.9 |
| Toluene | 108-88-3 | 10000000 | ug/kg | ND | | 5.5 | ND | | 1400 | ND | | 5.1 | ND | | 6.2 | ND | | 5 | ND | | 5.4 | ND | | 6 | ND | | 5.9 |
| Xylenes (Total) | 1330-20-7 | 10000000 | ug/kg | ND | | 16 | 3500 | J | 4200 | ND | | 15 | ND | | 19 | ND | | 15 | ND | | 16 | ND | | 18 | ND | | 18 |
| 1,1,2-Trichloro-1,2,2-trifluoroethane | 76-13-1 | 53000000 | ug/kg | ND | | 5.5 | ND | | 1400 | ND | | 5.1 | ND | | 6.2 | ND | | 5 | ND | | 5.4 | ND | | 6 | ND | | 5.9 |
| 1,2,4-Trichlorobenzene | 120-82-1 | 10000000 | ug/kg | ND | | 5.5 | ND | | 1400 | ND | | 5.1 | ND | | 6.2 | ND | | 5 | ND | | 5.4 | ND | | 6 | ND | | 5.9 |
| 1,1,1-Trichloroethane | 71-55-6 | 200000 | ug/kg | ND | | 5.5 | ND | | 1400 | ND | | 5.1 | ND | | 6.2 | ND | | 5 | ND | | 5.4 | ND | | 6 | ND | | 5.9 |
| 1,1,2-Trichloroethane | 79-00-5 | 5000 | ug/kg | ND | | 5.5 | ND | | 1400 | ND | | 5.1 | ND | | 6.2 | ND | | 5 | ND | | 5.4 | ND | | 6 | ND | | 5.9 |
| Trichloroethene | 79-01-6 | 5000 | ug/kg | ND | | 5.5 | ND | | 1400 | ND | | 5.1 | ND | | 6.2 | ND | | 5 | ND | | 5.4 | ND | | 6 | ND | | 5.9 |
| Trichlorofluoromethane | 75-69-4 | 10000000 | ug/kg | ND | | 5.5 | ND | | 1400 | ND | | 5.1 | ND | | 6.2 | ND | | 5 | ND | | 5.4 | ND | | 6 | ND | | 5.9 |
| Vinyl Chloride | 75-01-4 | 2000 | ug/kg | ND | | 5.5 | ND | | 1400 | ND | | 5.1 | ND | | 6.2 | ND | | 5 | ND | | 5.4 | ND | | 6 | ND | | 5.9 |

# Table 3
## Summary of Soil Analytical Results
## Compared to Pennsylvania Non-Residential Non-Use Aquifer Soil to Groundwater MSCs
## U. S. Steel - Proposed Samax 14.2-Acre Parcel
## Fairless Hills, Pennsylvania

| | CAS No. | PADEP Non-Residential Non-Use Aquifer Soil to GW Pathway MSCs | Location ID | STP-12 | | | STP-12 | | | STP-13 | | | STP-13 | | | STP-14 | | | STP-14 | | | STP-15 | | | STP-15 | | |
|---|---|---|---|---|---|---|---|---|---|---|---|---|---|---|---|---|---|---|---|---|---|---|---|---|---|---|---|
| | | | Sample ID | 034-STP-12_1.5-2.0' | | | 035-STP-12_7.5-8.0' | | | 003-STP-13_1.5-2.0 | | | 004-STP-13_9.5-10 | | | 012-STP-14_1.5-2.0 | | | 013-STP-14_11.5-12 | | | 036-STP-15_1.5-2.0' | | | 037-STP-15_8.5-9.0' | | |
| | | | Sample Date | 11/01/07 | | | 11/01/07 | | | 10/30/07 | | | 10/30/07 | | | 10/31/07 | | | 10/31/07 | | | 11/01/07 | | | 11/01/07 | | |
| | | | Depth to GW | 8.00 | | | 8.00 | | | 10.00 | | | 10.00 | | | 12.00 | | | 12.00 | | | 9.00 | | | 9.00 | | |
| | | | Start Depth (ft) | 1.50 | | | 7.50 | | | 1.50 | | | 9.50 | | | 1.50 | | | 11.50 | | | 1.50 | | | 8.50 | | |
| | | | End Depth (ft) | 2.00 | | | 8.00 | | | 2.00 | | | 10.00 | | | 2.00 | | | 12.00 | | | 2.00 | | | 9.00 | | |
| **TCL Semivolatiles** | | | Units | Result | Q | RL | Result | Q | RL | Result | Q | RL | Result | Q | RL | Result | Q | RL | Result | Q | RL | Result | Q | RL | Result | Q | RL |
| Acenaphthene | 83-32-9 | 4700000 | ug/kg | ND | | 7.4 | ND | | 1500 | 81 | | 74 | 55 | | 7.2 | ND | | 7.5 | ND | | 7.2 | ND | | 7.8 | ND | | 7.4 |
| Acenaphthylene | 208-96-8 | 18000000 | ug/kg | 2.3 | J | 7.4 | ND | | 1500 | 91 | | 74 | 7.1 | J | 7.2 | ND | | 7.5 | ND | | 7.2 | ND | | 7.8 | ND | | 7.4 |
| Acetaphenone | 98-86-2 | 1000000 | ug/kg | ND | | 36 | ND | | 7400 | ND | | 360 | ND | | 35 | ND | | 37 | ND | | 35 | ND | | 39 | ND | | 36 |
| Anthracene | 120-12-7 | 350000 | ug/kg | ND | | 7.4 | ND | | 1500 | 280 | | 74 | 94 | | 7.2 | ND | | 7.5 | ND | | 7.2 | ND | | 7.8 | ND | | 7.4 |
| Atrazine[1] | 1912-24-9 | 300 | ug/kg | ND | | 36 | ND | | 7400 | ND | | 360 | ND | | 35 | ND | | 37 | ND | | 35 | ND | | 39 | ND | | 36 |
| Benzaldehyde | 100-52-7 | NS | ug/kg | ND | | 36 | ND | | 7400 | ND | | 360 | ND | | 35 | ND | | 37 | ND | | 35 | ND | | 39 | ND | | 36 |
| Benzo(a)anthracene | 56-55-3 | 960000 | ug/kg | 6.6 | J | 7.4 | ND | | 1500 | 1800 | | 74 | 350 | | 7.2 | 2.8 | J | 7.5 | ND | | 7.2 | ND | | 7.8 | ND | | 7.4 |
| Benzo(a)pyrene | 50-32-8 | 860000 | ug/kg | 10 | | 7.4 | ND | | 1500 | 1900 | | 74 | 270 | | 7.2 | 3.1 | J | 7.5 | ND | | 7.2 | ND | | 7.8 | ND | | 7.4 |
| Benzo(b)fluoranthene | 205-99-2 | 170000 | ug/kg | 11 | | 7.4 | ND | | 1500 | 2600 | | 74 | 370 | | 7.2 | 4.5 | J | 7.5 | ND | | 7.2 | ND | | 7.8 | ND | | 7.4 |
| Benzo(g,h,i)perylene | 191-24-2 | 180000 | ug/kg | 9.7 | | 7.4 | ND | | 1500 | 1400 | | 74 | 150 | | 7.2 | 1.8 | J | 7.5 | ND | | 7.2 | ND | | 7.8 | ND | | 7.4 |
| Benzo(k)fluoranthene | 207-08-9 | 610000 | ug/kg | 6.5 | J | 7.4 | ND | | 1500 | 1000 | | 74 | 140 | | 7.2 | 1.5 | J | 7.5 | ND | | 7.2 | ND | | 7.8 | ND | | 7.4 |
| 1,1'-Biphenyl | 92-52-4 | 3100000 | ug/kg | ND | | 36 | ND | | 7400 | ND | | 360 | 7.8 | J | 35 | ND | | 37 | ND | | 35 | ND | | 39 | ND | | 36 |
| bis(2-Chloroethoxy) methane | 111-91-1 | 500 | ug/kg | ND | | 36 | ND | | 7400 | ND | | 360 | ND | | 35 | ND | | 37 | ND | | 35 | ND | | 39 | ND | | 36 |
| bis(2-Chloroethyl) ether | 111-44-4 | 5500 | ug/kg | ND | | 7.4 | ND | | 1500 | ND | | 74 | ND | | 7.2 | ND | | 7.5 | ND | | 7.2 | ND | | 7.8 | ND | | 7.4 |
| 2,2'-oxybis(1-Chloropropane) | 108-60-1 | 3000000 | ug/kg | ND | | 7.4 | ND | | 1500 | ND | | 74 | ND | | 7.2 | ND | | 7.5 | ND | | 7.2 | ND | | 7.8 | ND | | 7.4 |
| bis-(2-Ethylhexyl)phthalate | 117-81-7 | 6300000 | ug/kg | 7.9 | J | 36 | ND | | 7400 | ND | | 360 | 110 | | 35 | 15 | J | 37 | ND | | 35 | 18 | J | 39 | ND | | 36 |
| 4-Bromophenyl-phenylether | 101-55-3 | 500 | ug/kg | ND | | 36 | ND | | 7400 | ND | | 360 | ND | | 35 | ND | | 37 | ND | | 35 | ND | | 39 | ND | | 36 |
| Butylbenzylphthalate | 85-68-7 | 10000000 | ug/kg | 7.1 | J | 36 | ND | | 7400 | ND | | 360 | 5.6 | J | 35 | ND | | 37 | 3.6 | J | 35 | ND | | 39 | 11 | J | 36 |
| Caprolactam | 105-60-2 | NS | ug/kg | ND | | 36 | ND | | 7400 | ND | | 360 | ND | | 35 | ND | | 37 | 7.9 | J | 35 | ND | | 39 | ND | | 36 |
| Carbazole | 86-74-8 | 760000 | ug/kg | ND | | 7.4 | ND | | 1500 | 300 | | 74 | 68 | | 7.2 | ND | | 7.5 | ND | | 7.2 | ND | | 7.8 | ND | | 7.4 |
| 4-Chloro-3-methylphenol | 59-50-7 | 110000 | ug/kg | ND | | 36 | ND | | 7400 | ND | | 360 | ND | | 35 | ND | | 37 | ND | | 35 | ND | | 39 | ND | | 36 |
| 4-Chloroaniline | 106-47-8 | 52000 | ug/kg | ND | | 36 | ND | | 7400 | ND | | 360 | ND | | 35 | ND | | 37 | ND | | 35 | ND | | 39 | ND | | 36 |
| 2-Chloronapthalene | 91-58-7 | 18000000 | ug/kg | ND | | 7.4 | ND | | 1500 | ND | | 74 | ND | | 7.2 | ND | | 7.5 | ND | | 7.2 | ND | | 7.8 | ND | | 7.4 |
| 2-Chlorophenol | 95-57-8 | 4400 | ug/kg | ND | | 36 | ND | | 7400 | ND | | 360 | ND | | 35 | ND | | 37 | ND | | 35 | ND | | 39 | ND | | 36 |
| 4-Chlorophenyl-phenylether | 7005-72-3 | 500 | ug/kg | ND | | 36 | ND | | 7400 | ND | | 360 | ND | | 35 | ND | | 37 | ND | | 35 | ND | | 39 | ND | | 36 |
| Chrysene | 218-01-9 | 230000 | ug/kg | 12 | | 7.4 | ND | | 1500 | 2100 | | 74 | 400 | | 7.2 | 3.3 | J | 7.5 | ND | | 7.2 | ND | | 7.8 | ND | | 7.4 |
| 2-Methylphenol | 95-48-7 | 10000000 | ug/kg | ND | | 36 | ND | | 7400 | ND | | 360 | ND | | 35 | ND | | 37 | ND | | 35 | ND | | 39 | ND | | 36 |
| 4-Methylphenol | 106-44-5 | 51000000 | ug/kg | ND | | 36 | ND | | 7400 | ND | | 360 | ND | | 35 | ND | | 37 | ND | | 35 | ND | | 39 | ND | | 36 |
| Dibenzo(a,h)anthracene | 53-70-3 | 270000 | ug/kg | ND | | 7.4 | ND | | 1500 | 330 | | 74 | 41 | | 7.2 | ND | | 7.5 | ND | | 7.2 | ND | | 7.8 | ND | | 7.4 |
| Dibenzofuran | 132-64-9 | 500 | ug/kg | ND | | 36 | ND | | 7400 | 45 | J | 360 | 40 | | 35 | ND | | 37 | ND | | 35 | ND | | 39 | ND | | 36 |
| 3,3'-Dichlorobenzidine | 91-94-1 | 17000000 | ug/kg | ND | | 36 | ND | | 7400 | ND | | 360 | ND | | 35 | ND | | 37 | ND | | 35 | ND | | 39 | ND | | 36 |
| 2,4-Dichlorophenol | 120-83-2 | 2000000 | ug/kg | ND | | 7.4 | ND | | 1500 | ND | | 74 | ND | | 7.2 | ND | | 7.5 | ND | | 7.2 | ND | | 7.8 | ND | | 7.4 |
| Diethylphthalate | 84-66-2 | 10000000 | ug/kg | ND | | 36 | ND | | 7400 | ND | | 360 | ND | | 35 | ND | | 37 | ND | | 35 | ND | | 39 | ND | | 36 |
| 2,4-Dimethylphenol | 105-67-9 | 10000000 | ug/kg | ND | | 36 | ND | | 7400 | ND | | 360 | ND | | 35 | ND | | 37 | ND | | 35 | ND | | 39 | ND | | 36 |
| Dimethylphthalate | 131-11-3 | 500 | ug/kg | ND | | 36 | ND | | 7400 | ND | | 360 | ND | | 35 | ND | | 37 | ND | | 35 | ND | | 39 | ND | | 36 |
| Di-n-butylphthalate | 84-74-2 | 10000000 | ug/kg | 8.3 | J | 36 | ND | | 7400 | ND | | 360 | 18 | J | 35 | 16 | J | 37 | ND | | 35 | 10 | J | 39 | 10 | J | 36 |
| 4,6-Dinitro-2-methylphenol[1] | 534-52-1 | 500 | ug/kg | ND | | 190 | ND | | 38000 | ND | | 1900 | ND | | 180 | ND | | 190 | ND | | 180 | ND | | 200 | ND | | 190 |
| 2,4-Dinitrophenol | 51-28-5 | 41000 | ug/kg | ND | | 190 | ND | | 38000 | ND | | 1900 | ND | | 180 | ND | | 190 | ND | | 180 | ND | | 200 | ND | | 190 |
| 2,4-Dinitrotoluene | 121-14-2 | 840000 | ug/kg | ND | | 36 | ND | | 7400 | ND | | 360 | ND | | 35 | ND | | 37 | ND | | 35 | ND | | 39 | ND | | 36 |
| 2,6-Dinitrotoluene | 606-20-2 | 10000000 | ug/kg | ND | | 36 | ND | | 7400 | ND | | 360 | ND | | 35 | ND | | 37 | ND | | 35 | ND | | 39 | ND | | 36 |
| Fluoranthene | 206-44-0 | 3200000 | ug/kg | 22 | | 7.4 | ND | | 1500 | 5100 | | 74 | 710 | | 7.2 | 6.9 | J | 7.5 | ND | | 7.2 | 3.1 | J | 7.8 | ND | | 7.4 |
| Fluorene | 86-73-7 | 3800000 | ug/kg | ND | | 7.4 | ND | | 1500 | 81 | | 74 | 75 | | 7.2 | ND | | 7.5 | ND | | 7.2 | ND | | 7.8 | ND | | 7.4 |
| Hexachlorobenzene | 118-74-1 | 5800 | ug/kg | ND | | 7.4 | ND | | 1500 | ND | | 74 | ND | | 7.2 | ND | | 7.5 | ND | | 7.2 | ND | | 7.8 | ND | | 7.4 |
| Hexachlorobutadiene | 87-68-3 | 1200000 | ug/kg | ND | | 7.4 | ND | | 1500 | ND | | 74 | ND | | 7.2 | ND | | 7.5 | ND | | 7.2 | ND | | 7.8 | ND | | 7.4 |
| Hexachlorocyclopentadiene | 77-47-4 | 3300000 | ug/kg | ND | | 36 | ND | | 7400 | ND | | 360 | ND | | 35 | ND | | 37 | ND | | 35 | ND | | 39 | ND | | 36 |
| Hexachloroethane | 67-72-1 | 56000 | ug/kg | ND | | 36 | ND | | 7400 | ND | | 360 | ND | | 35 | ND | | 37 | ND | | 35 | ND | | 39 | ND | | 36 |
| Indeno(1,2,3-cd)pyrene | 193-39-5 | 190000000 | ug/kg | 4.8 | J | 7.4 | ND | | 1500 | 1300 | | 74 | 140 | | 7.2 | 1.6 | J | 7.5 | ND | | 7.2 | ND | | 7.8 | ND | | 7.4 |
| Isophorone | 78-59-1 | 10000000 | ug/kg | ND | | 36 | ND | | 7400 | 380 | | 360 | ND | | 35 | ND | | 37 | ND | | 35 | ND | | 39 | ND | | 36 |
| 2-Methylnaphthalene | 91-57-6 | 8000000 | ug/kg | ND | | 7.4 | 30000 | | 1500 | ND | | 74 | 11 | | 7.2 | ND | | 7.5 | ND | | 7.2 | 5 | J | 7.8 | 2.5 | J | 7.4 |
| Naphthalene | 91-20-3 | 7500000 | ug/kg | 4.2 | J | 7.4 | 210000 | | 1500 | 24 | J | 74 | 24 | | 7.2 | ND | | 7.5 | ND | | 7.2 | 35 | | 7.8 | 15 | | 7.4 |
| 2-Nitroaniline[1] | 99-09-2 | 580 | ug/kg | ND | | 190 | ND | | 38000 | ND | | 1900 | ND | | 180 | ND | | 190 | ND | | 180 | ND | | 200 | ND | | 190 |
| 3-Nitroaniline[1] | 88-74-4 | 580 | ug/kg | ND | | 190 | ND | | 38000 | ND | | 1900 | ND | | 180 | ND | | 190 | ND | | 180 | ND | | 200 | ND | | 190 |
| 4-Nitroaniline[1] | 100-01-6 | 580 | ug/kg | ND | | 190 | ND | | 38000 | ND | | 1900 | ND | | 180 | ND | | 190 | ND | | 0.18 | ND | | 200 | ND | | 190 |
| Nitrobenzene | 98-95-3 | 5100000 | ug/kg | ND | | 7.4 | ND | | 1500 | ND | | 74 | ND | | 7.2 | ND | | 7.5 | ND | | 7.2 | ND | | 7.8 | ND | | 7.4 |
| 2-Nitrophenol | 88-75-5 | 82000000 | ug/kg | ND | | 36 | ND | | 7400 | ND | | 360 | ND | | 35 | ND | | 37 | ND | | 35 | ND | | 39 | ND | | 36 |
| 4-Nitrophenol | 100-02-7 | 6000000 | ug/kg | ND | | 190 | ND | | 38000 | ND | | 1900 | ND | | 180 | ND | | 190 | ND | | 180 | ND | | 200 | ND | | 190 |
| N-Nitrosodi-n-propylamine | 621-64-7 | 37000 | ug/kg | ND | | 7.4 | ND | | 1500 | ND | | 74 | ND | | 7.2 | ND | | 7.5 | ND | | 7.2 | ND | | 7.8 | ND | | 7.4 |
| N-Nitrosodiphenylamine | 86-30-6 | 5500000 | ug/kg | ND | | 7.4 | ND | | 1500 | ND | | 74 | ND | | 7.2 | ND | | 7.5 | ND | | 7.2 | ND | | 7.8 | ND | | 7.4 |
| Di-n-octylphthalate | 117-84-0 | 10000000 | ug/kg | ND | | 36 | ND | | 7400 | ND | | 360 | ND | | 35 | ND | | 37 | ND | | 35 | ND | | 39 | ND | | 36 |
| Pentachlorophenol | 87-86-5 | 5000000 | ug/kg | ND | | 36 | ND | | 7400 | ND | | 360 | ND | | 35 | ND | | 37 | ND | | 35 | ND | | 39 | ND | | 36 |
| Phenanthrene | 85-01-8 | 10000000 | ug/kg | 11 | | 7.4 | ND | | 1500 | 2100 | | 74 | 410 | | 7.2 | 5.6 | J | 7.5 | 2.6 | J | 7.2 | 4.3 | J | 7.8 | 3.8 | J | 7.4 |
| Phenol | 108-95-2 | 40000000 | ug/kg | ND | | 7.4 | ND | | 1500 | ND | | 74 | ND | | 7.2 | ND | | 7.5 | ND | | 7.2 | ND | | 7.8 | ND | | 7.4 |
| Pyrene | 129-00-0 | 2200000 | ug/kg | 19 | | 7.4 | ND | | 1500 | 3600 | | 74 | 520 | | 7.2 | 5.4 | J | 7.5 | ND | | 7.2 | ND | | 7.8 | ND | | 7.4 |
| 2,4,5-Trichlorophenol | 95-95-4 | 190000000 | ug/kg | ND | | 36 | ND | | 7400 | ND | | 360 | ND | | 35 | ND | | 37 | ND | | 35 | ND | | 39 | ND | | 36 |
| 2,4,6-Trichlorophenol | 88-06-2 | 8900000 | ug/kg | ND | | 36 | ND | | 7400 | ND | | 360 | ND | | 35 | ND | | 37 | ND | | 35 | ND | | 39 | ND | | 36 |

# Table 3
## Summary of Soil Analytical Results
## Compared to Pennsylvania Non-Residential Non-Use Aquifer Soil to Groundwater MSCs
## U. S. Steel - Proposed Samax 14.2-Acre Parcel
## Fairless Hills, Pennsylvania

| | CAS No. | PADEP Non-Residential Non-Use Aquifer Soil to GW Pathway MSCs | Location ID | STP-12 | | | STP-12 | | | STP-13 | | | STP-13 | | | STP-14 | | | STP-14 | | | STP-15 | | | STP-15 | | |
|---|---|---|---|---|---|---|---|---|---|---|---|---|---|---|---|---|---|---|---|---|---|---|---|---|---|---|---|
| | | | Sample ID | 034-STP-12_1.5-2.0' | | | 035-STP-12_7.5-8.0' | | | 003-STP-13_1.5-2.0 | | | 004-STP-13_9.5-10 | | | 012-STP-14_1.5-2.0 | | | 013-STP-14_11.5-12 | | | 036-STP-15_1.5-2.0' | | | 037-STP-15_8.5-9.0' | | |
| | | | Sample Date | 11/01/07 | | | 11/01/07 | | | 10/30/07 | | | 10/30/07 | | | 10/31/07 | | | 10/31/07 | | | 11/01/07 | | | 11/01/07 | | |
| | | | Depth to GW | 8.00 | | | 8.00 | | | 10.00 | | | 10.00 | | | 12.00 | | | 12.00 | | | 9.00 | | | 9.00 | | |
| | | | Start Depth (ft) | 1.50 | | | 7.50 | | | 1.50 | | | 9.50 | | | 1.50 | | | 11.50 | | | 1.50 | | | 8.50 | | |
| | | | End Depth (ft) | 2.00 | | | 8.00 | | | 2.00 | | | 10.00 | | | 2.00 | | | 12.00 | | | 2.00 | | | 9.00 | | |
| **PCB (ug/kg)** | | | **Units** | **Result** | **Q** | **RL** | **Result** | **Q** | **RL** | **Result** | **Q** | **RL** | **Result** | **Q** | **RL** | **Result** | **Q** | **RL** | **Result** | **Q** | **RL** | **Result** | **Q** | **RL** | **Result** | **Q** | **RL** |
| Aroclor 1016 | 12674-11-2 | 200000 | ug/kg | ND | | 36 | 110 | | 37 | ND | | 36 | ND | | 36 | ND | | 37 | ND | | 36 | ND | | 39 | ND | | 36 |
| Aroclor 1221 | 11104-28-2 | 2500 | ug/kg | ND | | 36 | ND | | 37 | ND | | 36 | ND | | 36 | ND | | 37 | ND | | 36 | ND | | 39 | ND | | 36 |
| Aroclor 1232 | 11141-16-5 | 2000 | ug/kg | ND | | 36 | ND | | 37 | ND | | 36 | ND | | 36 | ND | | 37 | ND | | 36 | ND | | 39 | ND | | 36 |
| Aroclor 1242 | 53469-21-9 | 62000 | ug/kg | ND | | 36 | ND | | 37 | ND | | 36 | ND | | 36 | ND | | 37 | ND | | 36 | ND | | 39 | ND | | 36 |
| Aroclor 1248 | 12672-29-6 | 67000 | ug/kg | ND | | 36 | ND | | 37 | ND | | 36 | ND | | 36 | ND | | 37 | ND | | 36 | ND | | 39 | ND | | 36 |
| Aroclor 1254 | 11097-69-1 | 280000 | ug/kg | ND | | 36 | 1100 | | 37 | 130 | | 36 | 35 | J | 36 | 1700 | | 37 | ND | | 36 | ND | | 39 | ND | | 36 |
| Aroclor 1260 | 11096-82-5 | 1900000 | ug/kg | ND | | 36 | ND | | 37 | ND | | 36 | ND | | 36 | ND | | 37 | ND | | 36 | ND | | 39 | ND | | 36 |
| **PP Metals (mg/kg)** | | | **Units** | **Result** | **Q** | **RL** | **Result** | **Q** | **RL** | **Result** | **Q** | **RL** | **Result** | **Q** | **RL** | **Result** | **Q** | **RL** | **Result** | **Q** | **RL** | **Result** | **Q** | **RL** | **Result** | **Q** | **RL** |
| Antimony | 7440-36-0 | 27000 | mg/kg | 0.021 | B | 0.22 | 0.037 | B | 0.23 | 0.021 | B | 0.22 | 0.056 | B | 0.22 | 0.042 | B | 0.22 | 0.059 | B | 0.22 | 0.027 | B | 0.23 | 0.012 | B | 0.22 |
| Arsenic | 7440-38-2 | 150000 | mg/kg | 3.8 | | 0.11 | 1.7 | | 0.11 | 7 | | 0.11 | 5.6 | | 0.11 | 4.4 | J | 0.11 | 3.3 | J | 0.11 | 3.6 | | 0.12 | 1.9 | | 0.11 |
| Beryllium | 7440-41-7 | 190000 | mg/kg | 0.38 | | 0.11 | 0.25 | | 0.11 | 0.48 | | 0.11 | 1.4 | | 0.11 | 0.38 | | 0.11 | 0.41 | | 0.11 | 0.3 | | 0.12 | 0.22 | | 0.11 |
| Cadmium | 7440-43-9 | 38000 | mg/kg | 0.12 | | 0.11 | 0.097 | B | 0.11 | 0.19 | | 0.11 | 0.13 | | 0.11 | 0.089 | B | 0.11 | 0.094 | B | 0.11 | 0.081 | B | 0.12 | 0.057 | B | 0.11 |
| Chromium | 7440-47-3 | 190000 | mg/kg | 10.8 | | 0.22 | 12.6 | | 0.23 | 11.7 | J | 0.22 | 34.5 | J | 0.22 | 8.9 | J | 0.22 | 8.3 | J | 0.22 | 7.6 | | 0.23 | 5.9 | | 0.22 |
| Copper | 7440-50-8 | 190000 | mg/kg | 13 | J | 0.22 | 8.8 | J | 0.23 | 15.3 | J | 0.22 | 27.3 | J | 0.22 | 11 | | 0.22 | 10.5 | | 0.22 | 11.2 | J | 0.23 | 7.9 | J | 0.22 |
| Lead | 7439-92-1 | 190000 | mg/kg | 9.6 | | 0.11 | 4.2 | | 0.11 | 15.2 | | 0.11 | 15.6 | | 0.11 | 8.4 | | 0.11 | 7.4 | | 0.11 | 8.5 | | 0.12 | 4.1 | | 0.11 |
| Mercury | 7439-97-6 | 10000 | mg/kg | 0.019 | B | 0.036 | 0.01 | B | 0.037 | 0.035 | B | 0.036 | 0.0083 | B | 0.036 | 0.03 | B | 0.037 | 0.0092 | B | 0.036 | 0.027 | B | 0.039 | 0.0093 | B | 0.036 |
| Nickel | 7440-02-0 | 190000 | mg/kg | 13.6 | | 0.11 | 7.9 | | 0.11 | 12.2 | | 0.11 | 22.4 | | 0.11 | 12.3 | J | 0.11 | 11.1 | J | 0.11 | 12.6 | | 0.12 | 9.6 | | 0.11 |
| Selenium | 7782-49-2 | 26000 | mg/kg | 0.24 | B | 0.55 | 0.19 | B | 0.56 | 0.68 | J | 0.55 | 0.79 | J | 0.54 | 0.47 | B | 0.56 | 0.38 | B | 0.54 | 0.17 | B | 0.59 | 0.096 | B | 0.55 |
| Silver | 7440-22-4 | 84000 | mg/kg | 0.015 | B | 0.11 | 0.011 | B | 0.11 | 0.0073 | B | 0.11 | 0.029 | B | 0.11 | ND | | 0.11 | ND | | 0.11 | 0.011 | B | 0.12 | 0.008 | B | 0.11 |
| Thallium | 7440-28-0 | 14000 | mg/kg | 0.066 | B | 0.11 | 0.031 | B | 0.11 | 0.086 | B J | 0.11 | 0.47 | J | 0.11 | 0.078 | B | 0.11 | 0.07 | B | 0.11 | 0.055 | B | 0.12 | 0.031 | B | 0.11 |
| Zinc | 7440-66-6 | 190000 | mg/kg | 33.4 | J | 0.55 | 26.9 | J | 0.56 | 38.6 | J | 0.55 | 53.1 | J | 0.54 | 28.8 | J | 0.56 | 27.1 | J | 0.54 | 28.8 | J | 0.59 | 22.7 | J | 0.55 |
| **General Chemistry** | | | **Units** | **Result** | **Q** | **RL** | **Result** | **Q** | **RL** | **Result** | **Q** | **RL** | **Result** | **Q** | **RL** | **Result** | **Q** | **RL** | **Result** | **Q** | **RL** | **Result** | **Q** | **RL** | **Result** | **Q** | **RL** |
| Percent Solids | none | NS | percent | 90.5 | - | - | 88.6 | - | - | 90.7 | | | 92.2 | | | 88.9 | | | 92.1 | | | 85.4 | | | 91 | | |

Laboratory Qualifiers:

Organic Qualifiers:

B = Analyte was detected in the method blank.
J = Estimated Result. Result is less than RL.

Inorganic Qualifiers:

J = Estimated Result. Result is less than RL.
B = Analyte was detected in the method blank

Notes:

PADEP = Pensylvannia Department of Environmental Protection
MSC = PADEP's Medium Specific Concentration for surface and subsurface soil.
RL = Reporting Limit.

NS = No Act 2 Remediation Standard.

NA = Not Analyzed or Not Applicable
Q = Laboratory Qualifier
ND = Not Detetected at concentrations above the laboratory reporting limit.

ug/kg =microgram per kilogram

mg/kg =milligram per kilogram.

1. MSC listed for cis-1,3-Dichloropropene aNDtrans-1,3-Dichloropropene is based on the MSC for 1,3-Dichloropropene (Total).
2. Chromium III was used as the most stringent chromium standard.

# Table 3
## Summary of Soil Analytical Results
## Compared to Pennsylvania Non-Residential Non-Use Aquifer Soil to Groundwater MSCs
## U. S. Steel - Proposed Samax 14.2-Acre Parcel
## Fairless Hills, Pennsylvania

| | CAS No. | PADEP Non-Residential Non-Use Aquifer Soil to GW Pathway MSCs | Location ID | 016-FB-2-103107 | | | 007-FB-1_103007 | | | 031-FB-3_110107 | | | 011-TB-1-103107 | | | 027-TB-2_103007 | | | 038-TB-3_110107 | | |
|---|---|---|---|---|---|---|---|---|---|---|---|---|---|---|---|---|---|---|---|---|---|
| | | | Sample ID | C7K010229-005 | | | C7J310198-007 | | | C7K020245-004 | | | C7J310198-011 | | | C7K010229-016 | | | C7K020245-011 | | |
| | | | Sample Date | 10/31/07 | | | 10/30/07 | | | 10/30/07 | | | 10/31/07 | | | 10/30/07 | | | 10/30/07 | | |
| | | | Depth to GW | WATER | | | WATER | | | WATER | | | WATER | | | WATER | | | WATER | | |
| | | | Start Depth (ft) | 1.00 | | | 1.00 | | | 1.00 | | | 1.00 | | | 1.00 | | | 1.00 | | |
| | | | End Depth (ft) | ug/L | | | ug/L | | | ug/L | | | ug/L | | | ug/L | | | ug/L | | |
| **TCL Volatiles** | | | **Units** | **Result** | **Q** | **RL** | **Result** | **Q** | **RL** | **Result** | **Q** | **RL** | **Result** | **Q** | **RL** | **Result** | **Q** | **RL** | **Result** | **Q** | **RL** |
| Acetone | 67-64-1 | 10000000 | ug/kg | ND | | 5 | 3.2 | J | 5 | 2.8 | J | 5 | 3.3 | J | 5 | ND | | 5 | ND | | 5 |
| Benzene | 71-43-2 | 50000 | ug/kg | ND | | 1 | ND | | 1 | ND | | 1 | ND | | 1 | ND | | 1 | ND | | 1 |
| Bromodichloromethane | 75-27-4 | 10000 | ug/kg | ND | | 1 | ND | | 1 | ND | | 1 | ND | | 1 | ND | | 1 | ND | | 1 |
| Bromoform | 75-25-2 | 1000000 | ug/kg | ND | | 1 | ND | | 1 | ND | | 1 | ND | | 1 | ND | | 1 | ND | | 1 |
| Bromomethane | 74-83-9 | 100000 | ug/kg | ND | | 1 | ND | | 1 | ND | | 1 | ND | | 1 | ND | | 1 | ND | | 1 |
| 2-Butanone | 78-93-3 | 10000000 | ug/kg | ND | | 5 | ND | | 5 | ND | | 5 | ND | | 5 | ND | | 5 | ND | | 5 |
| Carbon Disulfide | 75-15-0 | 410000 | ug/kg | ND | | 1 | ND | | 1 | ND | | 1 | ND | | 1 | ND | | 1 | ND | | 1 |
| Carbon Tetrachloride | 56-23-5 | 5000 | ug/kg | ND | | 1 | ND | | 1 | ND | | 1 | ND | | 1 | ND | | 1 | ND | | 1 |
| Chlorobenzene | 108-90-7 | 1000000 | ug/kg | ND | | 1 | ND | | 1 | ND | | 1 | ND | | 1 | ND | | 1 | ND | | 1 |
| Chloroethane | 75-00-3 | 9000000 | ug/kg | ND | | 1 | ND | | 1 | ND | | 1 | ND | | 1 | ND | | 1 | ND | | 1 |
| Chloroform | 67-66-3 | 100000 | ug/kg | ND | | 1 | ND | | 1 | ND | | 1 | ND | | 1 | ND | | 1 | ND | | 1 |
| Chloromethane | 74-87-3 | 30000 | ug/kg | 0.46 | J | 1 | ND | | 1 | ND | | 1 | ND | | 1 | ND | | 1 | ND | | 1 |
| Isopropylbenzene | 98-82-8 | 10000000 | ug/kg | ND | | 1 | ND | | 1 | ND | | 1 | ND | | 1 | ND | | 1 | ND | | 1 |
| Cyclohexane | 110-82-7 | 500 | ug/kg | ND | | 1 | ND | | 1 | ND | | 1 | ND | | 1 | ND | | 1 | ND | | 1 |
| 1,2-Dibromoethane | 106-93-4 | 500 | ug/kg | ND | | 1 | ND | | 1 | ND | | 1 | ND | | 1 | ND | | 1 | ND | | 1 |
| 1,2-Dibromo-3-chloropropane | 96-12-8 | 2000 | ug/kg | ND | | 1 | ND | | 1 | ND | | 1 | ND | | 1 | ND | | 1 | ND | | 1 |
| Dibromochloromethane | 124-48-1 | 1000000 | ug/kg | ND | | 1 | ND | | 1 | ND | | 1 | ND | | 1 | ND | | 1 | ND | | 1 |
| 1,4-Dichlorobenzene | 106-46-7 | 1000000 | ug/kg | ND | | 1 | ND | | 1 | ND | | 1 | ND | | 1 | ND | | 1 | ND | | 1 |
| 1,2-Dichlorobenzene | 95-50-1 | 6000000 | ug/kg | ND | | 1 | ND | | 1 | ND | | 1 | ND | | 1 | ND | | 1 | ND | | 1 |
| 1,3-Dichlorobenzene | 541-73-1 | 6100000 | ug/kg | ND | | 1 | ND | | 1 | ND | | 1 | ND | | 1 | ND | | 1 | ND | | 1 |
| Dichlorodifluoromethane | 75-71-8 | 10000000 | ug/kg | ND | | 1 | ND | | 1 | ND | | 1 | ND | | 1 | ND | | 1 | ND | | 1 |
| 1,1-Dichloroethane | 75-34-3 | 110000 | ug/kg | ND | | 1 | ND | | 1 | ND | | 1 | ND | | 1 | ND | | 1 | ND | | 1 |
| 1,2-Dichloroethane | 107-06-2 | 5000 | ug/kg | ND | | 1 | ND | | 1 | ND | | 1 | ND | | 1 | ND | | 1 | ND | | 1 |
| trans-1,2-Dichloroethene | 156-60-5 | 100000 | ug/kg | ND | | 1 | ND | | 1 | ND | | 1 | ND | | 1 | ND | | 1 | ND | | 1 |
| cis-1,2-Dichloroethene | 156-59-2 | 70000 | ug/kg | ND | | 1 | ND | | 1 | ND | | 1 | ND | | 1 | ND | | 1 | ND | | 1 |
| 1,1-Dichloroethene | 75-35-4 | 7000 | ug/kg | ND | | 1 | ND | | 1 | ND | | 1 | ND | | 1 | ND | | 1 | ND | | 1 |
| 1,2-Dichloropropane | 78-87-5 | 5000 | ug/kg | ND | | 1 | ND | | 1 | ND | | 1 | ND | | 1 | ND | | 1 | ND | | 1 |
| trans-1,3-Dichloropropene | 10061-02-6 | 260000 | ug/kg | ND | | 1 | ND | | 1 | ND | | 1 | ND | | 1 | ND | | 1 | ND | | 1 |
| cis-1,3-Dichloropropene | 10061-01-5 | 260000 | ug/kg | ND | | 1 | ND | | 1 | ND | | 1 | ND | | 1 | ND | | 1 | ND | | 1 |
| Ethylbenzene | 100-41-4 | 7000000 | ug/kg | ND | | 1 | ND | | 1 | ND | | 1 | ND | | 1 | ND | | 1 | ND | | 1 |
| 2-Hexanone | 591-78-6 | 500 | ug/kg | ND | | 5 | ND | | 5 | ND | | 5 | ND | | 5 | ND | | 5 | ND | | 5 |
| Methyl Acetate | 79-20-9 | 10000000 | ug/kg | ND | | 1 | ND | | 1 | ND | | 1 | ND | | 1 | ND | | 1 | ND | | 1 |
| Methyl tert-Butyl Ether | 1634-04-4 | 20000 | ug/kg | ND | | 1 | ND | | 1 | ND | | 1 | ND | | 1 | ND | | 1 | ND | | 1 |
| 4-Methyl-2-pentanone | 108-10-1 | 4100000 | ug/kg | ND | | 5 | ND | | 5 | ND | | 5 | ND | | 5 | ND | | 5 | ND | | 5 |
| Methylcyclohexane | 108-87-2 | NS | ug/kg | ND | | 1 | ND | | 1 | ND | | 1 | ND | | 1 | ND | | 1 | ND | | 1 |
| Methylene Chloride | 75-09-2 | 50000 | ug/kg | ND | | 1 | 0.27 | J | 1 | 0.28 | J,B | 1 | 1 | | 1 | ND | | 1 | 0.51 | J,B | 1 |
| Styrene | 100-42-5 | 2400000 | ug/kg | ND | | 1 | ND | | 1 | ND | | 1 | ND | | 1 | ND | | 1 | ND | | 1 |
| 1,1,2,2-Tetrachloroethane | 79-34-5 | 3000 | ug/kg | ND | | 1 | ND | | 1 | ND | | 1 | ND | | 1 | ND | | 1 | ND | | 1 |
| Tetrachloroethene | 127-18-4 | 5000 | ug/kg | ND | | 1 | ND | | 1 | ND | | 1 | ND | | 1 | ND | | 1 | ND | | 1 |
| Toluene | 108-88-3 | 10000000 | ug/kg | ND | | 1 | ND | | 1 | ND | | 1 | ND | | 1 | ND | | 1 | ND | | 1 |
| Xylenes (Total) | 1330-20-7 | 10000000 | ug/kg | ND | | 3 | ND | | 3 | ND | | 3 | ND | | 3 | ND | | 3 | ND | | 3 |
| 1,1,2-Trichloro-1,2,2-trifluoroethane | 76-13-1 | 53000000 | ug/kg | ND | | 1 | ND | | 1 | ND | | 1 | ND | | 1 | ND | | 1 | ND | | 1 |
| 1,2,4-Trichlorobenzene | 120-82-1 | 10000000 | ug/kg | ND | | 1 | ND | | 1 | ND | | 1 | ND | | 1 | ND | | 1 | ND | | 1 |
| 1,1,1-Trichloroethane | 71-55-6 | 200000 | ug/kg | ND | | 1 | ND | | 1 | ND | | 1 | ND | | 1 | ND | | 1 | ND | | 1 |
| 1,1,2-Trichloroethane | 79-00-5 | 5000 | ug/kg | ND | | 1 | ND | | 1 | ND | | 1 | ND | | 1 | ND | | 1 | ND | | 1 |
| Trichloroethene | 79-01-6 | 5000 | ug/kg | ND | | 1 | ND | | 1 | ND | | 1 | ND | | 1 | ND | | 1 | ND | | 1 |
| Trichlorofluoromethane | 75-69-4 | 10000000 | ug/kg | ND | | 1 | ND | | 1 | ND | | 1 | ND | | 1 | ND | | 1 | ND | | 1 |
| Vinyl Chloride | 75-01-4 | 2000 | ug/kg | ND | | 1 | ND | | 1 | ND | | 1 | ND | | 1 | ND | | 1 | ND | | 1 |

# Table 3
## Summary of Soil Analytical Results
## Compared to Pennsylvania Non-Residential Non-Use Aquifer Soil to Groundwater MSCs
## U. S. Steel - Proposed Samax 14.2-Acre Parcel
## Fairless Hills, Pennsylvania

| | CAS No. | PADEP Non-Residential Non-Use Aquifer Soil to GW Pathway MSCs | Location ID | 016-FB-2-103107 | | | 007-FB-1_103007 | | | 031-FB-3_110107 | | | 011-TB-1-103107 | | | 027-TB-2_103007 | | | 038-TB-3_110107 | | |
|---|---|---|---|---|---|---|---|---|---|---|---|---|---|---|---|---|---|---|---|---|---|
| | | | Sample ID | C7K010229-005 | | | C7J310198-007 | | | C7K020245-004 | | | C7J310198-011 | | | C7K010229-016 | | | C7K020245-011 | | |
| | | | Sample Date | 10/31/07 | | | 10/30/07 | | | 10/30/07 | | | 10/31/07 | | | 10/30/07 | | | 10/30/07 | | |
| | | | Depth to GW | WATER | | | WATER | | | WATER | | | WATER | | | WATER | | | WATER | | |
| | | | Start Depth (ft) | 1.00 | | | 1.00 | | | 1.00 | | | 1.00 | | | 1.00 | | | 1.00 | | |
| | | | End Depth (ft) | ug/L | | | ug/L | | | ug/L | | | ug/L | | | ug/L | | | ug/L | | |
| **TCL Semivolatiles** | | | Units | Result | Q | RL | Result | Q | RL | Result | Q | RL | Result | Q | RL | Result | Q | RL | Result | Q | RL |
| Acenaphthene | 83-32-9 | 4700000 | ug/kg | ND | | 0.19 | ND | | 0.19 | ND | | 0.19 | - | | - | - | | - | - | | - |
| Acenaphthylene | 208-96-8 | 18000000 | ug/kg | ND | | 0.19 | ND | | 0.19 | ND | | 0.19 | - | | - | - | | - | - | | - |
| Acetaphenone | 98-86-2 | 1000000 | ug/kg | ND | | 0.96 | ND | | 0.95 | ND | | 0.95 | - | | - | - | | - | - | | - |
| Anthracene | 120-12-7 | 350000 | ug/kg | ND | | 0.19 | ND | | 0.19 | ND | | 0.19 | - | | - | - | | - | - | | - |
| Atrazine[1] | 1912-24-9 | 300 | ug/kg | ND | | 0.96 | ND | | 0.95 | ND | | 0.95 | - | | - | - | | - | - | | - |
| Benzaldehyde | 100-52-7 | NS | ug/kg | ND | | 0.96 | ND | | 0.95 | ND | | 0.95 | - | | - | - | | - | - | | - |
| Benzo(a)anthracene | 56-55-3 | 960000 | ug/kg | ND | | 0.19 | ND | | 0.19 | ND | | 0.19 | - | | - | - | | - | - | | - |
| Benzo(a)pyrene | 50-32-8 | 860000 | ug/kg | ND | | 0.19 | ND | | 0.19 | ND | | 0.19 | - | | - | - | | - | - | | - |
| Benzo(b)fluoranthene | 205-99-2 | 170000 | ug/kg | ND | | 0.19 | ND | | 0.19 | ND | | 0.19 | - | | - | - | | - | - | | - |
| Benzo(g,h,i)perylene | 191-24-2 | 180000 | ug/kg | ND | | 0.19 | ND | | 0.19 | ND | | 0.19 | - | | - | - | | - | - | | - |
| Benzo(k)fluoranthene | 207-08-9 | 610000 | ug/kg | ND | | 0.19 | ND | | 0.19 | ND | | 0.19 | - | | - | - | | - | - | | - |
| 1,1'-Biphenyl | 92-52-4 | 3100000 | ug/kg | ND | | 0.96 | ND | | 0.95 | ND | | 0.95 | - | | - | - | | - | - | | - |
| bis(2-Chloroethoxy) methane | 111-91-1 | 500 | ug/kg | ND | | 0.96 | ND | | 0.95 | ND | | 0.95 | - | | - | - | | - | - | | - |
| bis(2-Chloroethyl) ether | 111-44-4 | 5500 | ug/kg | ND | | 0.19 | ND | | 0.19 | ND | | 0.19 | - | | - | - | | - | - | | - |
| 2,2'-oxybis(1-Chloropropane) | 108-60-1 | 3000000 | ug/kg | ND | | 0.19 | ND | | 0.19 | ND | | 0.19 | - | | - | - | | - | - | | - |
| bis-(2-Ethylhexyl)phthalate | 117-81-7 | 6300000 | ug/kg | ND | | 0.96 | ND | | 0.95 | 0.17 | J | 0.95 | - | | - | - | | - | - | | - |
| 4-Bromophenyl-phenylether | 101-55-3 | 500 | ug/kg | ND | | 0.96 | ND | | 0.95 | ND | | 0.95 | - | | - | - | | - | - | | - |
| Butylbenzylphthalate | 85-68-7 | 10000000 | ug/kg | ND | | 0.96 | 0.18 | J | 0.95 | ND | | 0.95 | - | | - | - | | - | - | | - |
| Caprolactam | 105-60-2 | NS | ug/kg | ND | | 0.96 | 0.27 | J | 0.95 | ND | | 0.95 | - | | - | - | | - | - | | - |
| Carbazole | 86-74-8 | 760000 | ug/kg | ND | | 0.19 | ND | | 0.19 | ND | | 0.19 | - | | - | - | | - | - | | - |
| 4-Chloro-3-methylphenol | 59-50-7 | 110000 | ug/kg | ND | | 0.96 | ND | | 0.95 | ND | | 0.95 | - | | - | - | | - | - | | - |
| 4-Chloroaniline | 106-47-8 | 52000 | ug/kg | ND | | 0.96 | ND | | 0.95 | ND | | 0.95 | - | | - | - | | - | - | | - |
| 2-Chloronapthalene | 91-58-7 | 18000000 | ug/kg | ND | | 0.19 | ND | | 0.19 | ND | | 0.19 | - | | - | - | | - | - | | - |
| 2-Chlorophenol | 95-57-8 | 4400 | ug/kg | ND | | 0.96 | ND | | 0.95 | ND | | 0.95 | - | | - | - | | - | - | | - |
| 4-Chlorophenyl-phenylether | 7005-72-3 | 500 | ug/kg | ND | | 0.96 | ND | | 0.95 | ND | | 0.95 | - | | - | - | | - | - | | - |
| Chrysene | 218-01-9 | 230000 | ug/kg | ND | | 0.19 | ND | | 0.19 | ND | | 0.19 | - | | - | - | | - | - | | - |
| 2-Methylphenol | 95-48-7 | 10000000 | ug/kg | ND | | 0.96 | ND | | 0.95 | ND | | 0.95 | - | | - | - | | - | - | | - |
| 4-Methylphenol | 106-44-5 | 51000000 | ug/kg | ND | | 0.96 | ND | | 0.95 | ND | | 0.95 | - | | - | - | | - | - | | - |
| Dibenzo(a,h)anthracene | 53-70-3 | 270000 | ug/kg | ND | | 0.19 | ND | | 0.19 | ND | | 0.19 | - | | - | - | | - | - | | - |
| Dibenzofuran | 132-64-9 | 500 | ug/kg | ND | | 0.96 | ND | | 0.95 | ND | | 0.95 | - | | - | - | | - | - | | - |
| 3,3'-Dichlorobenzidine | 91-94-1 | 17000000 | ug/kg | ND | | 0.96 | ND | | 0.95 | ND | | 0.95 | - | | - | - | | - | - | | - |
| 2,4-Dichlorophenol | 120-83-2 | 2000000 | ug/kg | ND | | 0.19 | ND | | 0.19 | ND | | 0.19 | - | | - | - | | - | - | | - |
| Diethylphthalate | 84-66-2 | 10000000 | ug/kg | ND | | 0.96 | ND | | 0.95 | ND | | 0.95 | - | | - | - | | - | - | | - |
| 2,4-Dimethylphenol | 105-67-9 | 10000000 | ug/kg | ND | | 0.96 | ND | | 0.95 | ND | | 0.95 | - | | - | - | | - | - | | - |
| Dimethylphthalate | 131-11-3 | 500 | ug/kg | ND | | 0.96 | ND | | 0.95 | ND | | 0.95 | - | | - | - | | - | - | | - |
| Di-n-butylphthalate | 84-74-2 | 10000000 | ug/kg | ND | | 0.96 | 0.091 | J | 0.95 | ND | | 0.95 | - | | - | - | | - | - | | - |
| 4,6-Dinitro-2-methylphenol[1] | 534-52-1 | 500 | ug/kg | ND | | 4.8 | ND | | 4.8 | ND | | 4.8 | - | | - | - | | - | - | | - |
| 2,4-Dinitrophenol | 51-28-5 | 41000 | ug/kg | ND | | 4.8 | ND | | 4.8 | ND | | 4.8 | - | | - | - | | - | - | | - |
| 2,4-Dinitrotoluene | 121-14-2 | 840000 | ug/kg | ND | | 0.96 | ND | | 0.95 | ND | | 0.95 | - | | - | - | | - | - | | - |
| 2,6-Dinitrotoluene | 606-20-2 | 10000000 | ug/kg | ND | | 0.96 | ND | | 0.95 | ND | | 0.95 | - | | - | - | | - | - | | - |
| Fluoranthene | 206-44-0 | 3200000 | ug/kg | ND | | 0.19 | ND | | 0.19 | ND | | 0.19 | - | | - | - | | - | - | | - |
| Fluorene | 86-73-7 | 3800000 | ug/kg | ND | | 0.19 | ND | | 0.19 | ND | | 0.19 | - | | - | - | | - | - | | - |
| Hexachlorobenzene | 118-74-1 | 5800 | ug/kg | ND | | 0.19 | ND | | 0.19 | ND | | 0.19 | - | | - | - | | - | - | | - |
| Hexachlorobutadiene | 87-68-3 | 1200000 | ug/kg | ND | | 0.19 | ND | | 0.19 | ND | | 0.19 | - | | - | - | | - | - | | - |
| Hexachlorocyclopentadiene | 77-47-4 | 3300000 | ug/kg | ND | | 0.96 | ND | | 0.95 | ND | | 0.95 | - | | - | - | | - | - | | - |
| Hexachloroethane | 67-72-1 | 56000 | ug/kg | ND | | 0.96 | ND | | 0.95 | ND | | 0.95 | - | | - | - | | - | - | | - |
| Indeno(1,2,3-cd)pyrene | 193-39-5 | 190000000 | ug/kg | ND | | 0.19 | ND | | 0.19 | ND | | 0.19 | - | | - | - | | - | - | | - |
| Isophorone | 78-59-1 | 10000000 | ug/kg | ND | | 0.96 | ND | | 0.95 | ND | | 0.95 | - | | - | - | | - | - | | - |
| 2-Methylnaphthalene | 91-57-6 | 8000000 | ug/kg | ND | | 0.19 | ND | | 0.19 | ND | | 0.19 | - | | - | - | | - | - | | - |
| Naphthalene | 91-20-3 | 7500000 | ug/kg | ND | | 0.19 | ND | | 0.19 | ND | | 0.19 | - | | - | - | | - | - | | - |
| 2-Nitroaniline[1] | 99-09-2 | 580 | ug/kg | ND | | 4.8 | ND | | 4.8 | ND | | 4.8 | - | | - | - | | - | - | | - |
| 3-Nitroaniline[1] | 88-74-4 | 580 | ug/kg | ND | | 4.8 | ND | | 4.8 | ND | | 4.8 | - | | - | - | | - | - | | - |
| 4-Nitroaniline[1] | 100-01-6 | 580 | ug/kg | ND | | 4.8 | ND | | 4.8 | ND | | 4.8 | - | | - | - | | - | - | | - |
| Nitrobenzene | 98-95-3 | 5100000 | ug/kg | ND | | 0.19 | ND | | 0.19 | ND | | 0.19 | - | | - | - | | - | - | | - |
| 2-Nitrophenol | 88-75-5 | 82000000 | ug/kg | ND | | 0.96 | ND | | 0.95 | ND | | 0.95 | - | | - | - | | - | - | | - |
| 4-Nitrophenol | 100-02-7 | 6000000 | ug/kg | ND | | 4.8 | ND | | 4.8 | ND | | 4.8 | - | | - | - | | - | - | | - |
| N-Nitrosodi-n-propylamine | 621-64-7 | 37000 | ug/kg | ND | | 0.19 | ND | | 0.19 | ND | | 0.19 | - | | - | - | | - | - | | - |
| N-Nitrosodiphenylamine | 86-30-6 | 5500000 | ug/kg | ND | | 0.19 | ND | | 0.19 | ND | | 0.19 | - | | - | - | | - | - | | - |
| Di-n-octylphthalate | 117-84-0 | 10000000 | ug/kg | ND | | 0.96 | ND | | 0.95 | ND | | 0.95 | - | | - | - | | - | - | | - |
| Pentachlorophenol | 87-86-5 | 5000000 | ug/kg | ND | | 0.96 | ND | | 0.95 | ND | | 0.95 | - | | - | - | | - | - | | - |
| Phenanthrene | 85-01-8 | 10000000 | ug/kg | ND | | 0.19 | 0.085 | J | 0.19 | ND | | 0.19 | - | | - | - | | - | - | | - |
| Phenol | 108-95-2 | 40000000 | ug/kg | ND | | 0.19 | ND | | 0.19 | ND | | 0.19 | - | | - | - | | - | - | | - |
| Pyrene | 129-00-0 | 2200000 | ug/kg | ND | | 0.19 | ND | | 0.19 | ND | | 0.19 | - | | - | - | | - | - | | - |
| 2,4,5-Trichlorophenol | 95-95-4 | 190000000 | ug/kg | ND | | 0.96 | ND | | 0.95 | ND | | 0.95 | - | | - | - | | - | - | | - |
| 2,4,6-Trichlorophenol | 88-06-2 | 8900000 | ug/kg | ND | | 0.96 | ND | | 0.95 | ND | | 0.95 | - | | - | - | | - | - | | - |

# Table 3
## Summary of Soil Analytical Results
## Compared to Pennsylvania Non-Residential Non-Use Aquifer Soil to Groundwater MSCs
## U. S. Steel - Proposed Samax 14.2-Acre Parcel
## Fairless Hills, Pennsylvania

| | CAS No. | PADEP Non-Residential Non-Use Aquifer Soil to GW Pathway MSCs | Location ID | 016-FB-2-103107 | | | 007-FB-1_103007 | | | 031-FB-3_110107 | | | 011-TB-1-103107 | | | 027-TB-2_103007 | | | 038-TB-3_110107 | | |
|---|---|---|---|---|---|---|---|---|---|---|---|---|---|---|---|---|---|---|---|---|---|
| | | | Sample ID | C7K010229-005 | | | C7J310198-007 | | | C7K020245-004 | | | C7J310198-011 | | | C7K010229-016 | | | C7K020245-011 | | |
| | | | Sample Date | 10/31/07 | | | 10/30/07 | | | 10/30/07 | | | 10/31/07 | | | 10/30/07 | | | 10/30/07 | | |
| | | | Depth to GW | WATER | | | WATER | | | WATER | | | WATER | | | WATER | | | WATER | | |
| | | | Start Depth (ft) | 1.00 | | | 1.00 | | | 1.00 | | | 1.00 | | | 1.00 | | | 1.00 | | |
| | | | End Depth (ft) | ug/L | | | ug/L | | | ug/L | | | ug/L | | | ug/L | | | ug/L | | |
| **PCB (ug/kg)** | | | **Units** | **Result** | **Q** | **RL** | **Result** | **Q** | **RL** | **Result** | **Q** | **RL** | **Result** | **Q** | **RL** | **Result** | **Q** | **RL** | **Result** | **Q** | **RL** |
| Aroclor 1016 | 12674-11-2 | 200000 | ug/kg | ND | | 0.95 | ND | | 0.95 | ND | | 0.95 | - | | - | - | | - | - | | - |
| Aroclor 1221 | 11104-28-2 | 2500 | ug/kg | ND | | 0.95 | ND | | 0.95 | ND | | 0.95 | - | | - | - | | - | - | | - |
| Aroclor 1232 | 11141-16-5 | 2000 | ug/kg | ND | | 0.95 | ND | | 0.95 | ND | | 0.95 | - | | - | - | | - | - | | - |
| Aroclor 1242 | 53469-21-9 | 62000 | ug/kg | ND | | 0.95 | ND | | 0.95 | ND | | 0.95 | - | | - | - | | - | - | | - |
| Aroclor 1248 | 12672-29-6 | 67000 | ug/kg | ND | | 0.95 | ND | | 0.95 | ND | | 0.95 | - | | - | - | | - | - | | - |
| Aroclor 1254 | 11097-69-1 | 280000 | ug/kg | ND | | 0.95 | ND | | 0.95 | ND | | 0.95 | - | | - | - | | - | - | | - |
| Aroclor 1260 | 11096-82-5 | 1900000 | ug/kg | ND | | 0.95 | ND | | 0.95 | ND | | 0.95 | - | | - | - | | - | - | | - |
| **PP Metals (mg/kg)** | | | **Units** | **Result** | **Q** | **RL** | **Result** | **Q** | **RL** | **Result** | **Q** | **RL** | **Result** | **Q** | **RL** | **Result** | **Q** | **RL** | **Result** | **Q** | **RL** |
| Antimony | 7440-36-0 | 27000 | mg/kg | ND | | 2 | ND | | 2 | 0.23 | B | 2 | - | | - | - | | - | - | | - |
| Arsenic | 7440-38-2 | 150000 | mg/kg | ND | | 1 | ND | | 1 | 0.33 | B J | 1 | - | | - | - | | - | - | | - |
| Beryllium | 7440-41-7 | 190000 | mg/kg | ND | | 1 | ND | | 1 | ND | | 1 | - | | - | - | | - | - | | - |
| Cadmium | 7440-43-9 | 38000 | mg/kg | ND | | 1 | ND | | 1 | ND | | 1 | - | | - | - | | - | - | | - |
| Chromium | 7440-47-3 | 190000 | mg/kg | 1.6 | B J | 2 | 1.4 | B J | 2 | 1.6 | J | 2 | - | | - | - | | - | - | | - |
| Copper | 7440-50-8 | 190000 | mg/kg | ND | | 2 | 0.17 | B | 2 | 2.8 | B | 2 | - | | - | - | | - | - | | - |
| Lead | 7439-92-1 | 190000 | mg/kg | ND | | 1 | ND | | 1 | ND | | 1 | - | | - | - | | - | - | | - |
| Mercury | 7439-97-6 | 10000 | mg/kg | ND | | 0.2 | ND | | 0.2 | ND | | 0.2 | - | | - | - | | - | - | | - |
| Nickel | 7440-02-0 | 190000 | mg/kg | ND | | 1 | ND | | 1 | 0.073 | B | 1 | - | | - | - | | - | - | | - |
| Selenium | 7782-49-2 | 26000 | mg/kg | ND | | 5 | ND | | 5 | ND | | 5 | - | | - | - | | - | - | | - |
| Silver | 7440-22-4 | 84000 | mg/kg | ND | | 1 | ND | | 1 | ND | | 1 | - | | - | - | | - | - | | - |
| Thallium | 7440-28-0 | 14000 | mg/kg | 0.21 | B | 1 | 0.048 | B | 1 | 0.089 | B | 1 | - | | - | - | | - | - | | - |
| Zinc | 7440-66-6 | 190000 | mg/kg | ND | | 5 | 0.93 | B | 5 | 1.1 | J | 5 | - | | - | - | | - | - | | - |
| **General Chemistry** | | | **Units** | **Result** | **Q** | **RL** | **Result** | **Q** | **RL** | **Result** | **Q** | **RL** | **Result** | **Q** | **RL** | **Result** | **Q** | **RL** | **Result** | **Q** | **RL** |
| Percent Solids | none | NS | percent | NA | | NA | NA | | NA | NA | | NA | - | | - | - | | - | - | | - |

Laboratory Qualifiers:
Organic Qualifiers:
B = Analyte was detected in the method blank
J = Estimated Result. Result is less than RL.
Inorganic Qualifiers:
B = Estimated Result. Result is less than RL.
J = Analyte was detected in the method blank.

Notes:
PADEP = Pensylvannia Department of Environmental Protection
MSC = PADEP's Medium Specific Concentration for surface and subsurface soil.
RL = Reporting Limit.
NS = No Act 2 Remediation Standard.
NA = Not Analyzed or Not Applicable
ND = Not Detetected at concentrations above the laboratory reporting limit.
ug/kg = microgram per kilogram.
mg/kg = milligram per kilogram.
1. MSC listed for cis-1,3-Dichloropropene aNDtrans-1,3-Dichloropropene is based on the MSC for 1,3-Dichloropropene (Total)
2. Chromium III was used as the most stringent chromium standard

# Table 4
## Summary of Soil Analytical Results
## Comparison to USEPA Region III RBCs
## U. S. Steel - Proposed Samax 14.2-Acre Parcel
## Fairless Hills, Pennsylvania

| | CAS No. | EPA Region III Industrial Soil RBC | Location ID | STP-1 | | | STP-1 | | | STP-2 | | | STP-2 | | | STP-3 | | | STP-3 | | | STP-3 | | | STP-4 | | | STP-4 | | |
|---|---|---|---|---|---|---|---|---|---|---|---|---|---|---|---|---|---|---|---|---|---|---|---|---|---|---|---|---|---|---|
| | | | Sample ID | 001-STP-1_1.5-2.0 | | | 002-STP-1_10-10.5 | | | 005-STP-2_1.5-2.0 | | | 006-STP-2_10.5-11.0 | | | 008-STP-3_1.5-2.0 | | | 009-DUP-1-103007 | | | 010-STP-3_10.5-11 | | | 014-STP-4_1.5-2.0 | | | 015-STP-4_11.5-12 | | |
| | | | Sample Date | 10/30/07 | | | 10/30/07 | | | 10/30/07 | | | 10/30/07 | | | 10/30/07 | | | 10/30/07 | | | 10/30/07 | | | 10/31/07 | | | 10/31/07 | | |
| | | | Depth to GW | NA | | | NA | | | 11.00 | | | 11.00 | | | 11.00 | | | 11.00 | | | 11.00 | | | 11.00 | | | 11.00 | | |
| | | | Start Depth (ft) | 1.50 | | | 10.00 | | | 1.50 | | | 10.50 | | | 1.50 | | | 1.50 | | | 10.50 | | | 1.50 | | | 11.50 | | |
| | | | End Depth (ft) | 2.00 | | | 10.50 | | | 2.00 | | | 11.00 | | | 2.00 | | | 2.00 | | | 11.00 | | | 2.00 | | | 12.00 | | |
| **TCL Volatiles** | | | Units | Result | Q | RL | Result | Q | RL | Result | Q | RL | Result | Q | RL | Result | Q | RL | Result | Q | RL | Result | Q | RL | Result | Q | RL | Result | Q | RL |
| Acetone | 67-64-1 | 920000000 | ug/kg | ND | | 26 | ND | | 22 | ND | | 23 | ND | | 23 | ND | | 22 | ND | | 23 | ND | | 19 | ND | | 20 | ND | | 26 |
| Benzene | 71-43-2 | 52000 | ug/kg | ND | | 6.5 | ND | | 5.5 | ND | | 5.6 | ND | | 5.9 | ND | | 5.6 | ND | | 5.7 | ND | | 4.7 | ND | | 5.1 | ND | | 6.4 |
| Bromodichloromethane | 75-27-4 | 46000 | ug/kg | ND | | 6.5 | ND | | 5.5 | ND | | 5.6 | ND | | 5.9 | ND | | 5.6 | ND | | 5.7 | ND | | 4.7 | ND | | 5.1 | ND | | 6.4 |
| Bromoform | 75-25-2 | 360000 | ug/kg | ND | | 6.5 | ND | | 5.5 | ND | | 5.6 | ND | | 5.9 | ND | | 5.6 | ND | | 5.7 | ND | | 4.7 | ND | | 5.1 | ND | | 6.4 |
| Bromomethane | 74-83-9 | 1400000 | ug/kg | ND | | 6.5 | ND | | 5.5 | ND | | 5.6 | ND | | 5.9 | ND | | 5.6 | ND | | 5.7 | ND | | 4.7 | ND | | 5.1 | ND | | 6.4 |
| 2-Butanone | 78-93-3 | 610000000 | ug/kg | ND | | 6.5 | ND | | 5.5 | ND | | 5.6 | ND | | 5.9 | ND | | 5.6 | ND | | 5.7 | ND | | 4.7 | ND | | 5.1 | ND | | 6.4 |
| Carbon Disulfide | 75-15-0 | 100000000 | ug/kg | ND | | 6.5 | ND | | 5.5 | ND | | 5.6 | 4 | J | 5.9 | ND | | 5.6 | ND | | 5.7 | ND | | 4.7 | ND | | 5.1 | ND | | 6.4 |
| Carbon Tetrachloride | 56-23-5 | 22000 | ug/kg | ND | | 6.5 | ND | | 5.5 | ND | | 5.6 | ND | | 5.9 | ND | | 5.6 | ND | | 5.7 | ND | | 4.7 | ND | | 5.1 | ND | | 6.4 |
| Chlorobenzene | 108-90-7 | 200000000 | ug/kg | ND | | 6.5 | ND | | 5.5 | ND | | 5.6 | ND | | 5.9 | ND | | 5.6 | ND | | 5.7 | ND | | 4.7 | ND | | 5.1 | ND | | 6.4 |
| Chloroethane | 75-00-3 | 990000 | ug/kg | ND | | 6.5 | ND | | 5.5 | ND | | 5.6 | ND | | 5.9 | ND | | 5.6 | ND | | 5.7 | ND | | 4.7 | ND | | 5.1 | ND | | 6.4 |
| Chloroform | 67-66-3 | 10000000 | ug/kg | ND | | 6.5 | ND | | 5.5 | ND | | 5.6 | ND | | 5.9 | ND | | 5.6 | ND | | 5.7 | ND | | 4.7 | ND | | 5.1 | ND | | 6.4 |
| Chloromethane | 74-87-3 | NS | ug/kg | ND | | 6.5 | ND | | 5.5 | ND | | 5.6 | ND | | 5.9 | ND | | 5.6 | ND | | 5.7 | ND | | 4.7 | ND | | 5.1 | ND | | 6.4 |
| Isopropylbenzene | 98-82-8 | 100000000 | ug/kg | ND | | 6.5 | ND | | 5.5 | ND | | 5.6 | ND | | 5.9 | ND | | 5.6 | ND | | 5.7 | ND | | 4.7 | ND | | 5.1 | ND | | 6.4 |
| Cyclohexane | 110-82-7 | NS | ug/kg | ND | | 6.5 | ND | | 5.5 | ND | | 5.6 | ND | | 5.9 | ND | | 5.6 | ND | | 5.7 | ND | | 4.7 | ND | | 5.1 | ND | | 6.4 |
| 1,2-Dibromoethane | 106-93-4 | 1400 | ug/kg | ND | | 6.5 | ND | | 5.5 | ND | | 5.6 | ND | | 5.9 | ND | | 5.6 | ND | | 5.7 | ND | | 4.7 | ND | | 5.1 | ND | | 6.4 |
| 1,2-Dibromo-3-chloropropane | 96-12-8 | 2000 | ug/kg | ND | | 6.5 | ND | | 5.5 | ND | | 5.6 | ND | | 5.9 | ND | | 5.6 | ND | | 5.7 | ND | | 4.7 | ND | | 5.1 | ND | | 6.4 |
| Dibromochloromethane | 124-48-1 | 34000 | ug/kg | ND | | 6.5 | ND | | 5.5 | ND | | 5.6 | ND | | 5.9 | ND | | 5.6 | ND | | 5.7 | ND | | 4.7 | ND | | 5.1 | ND | | 6.4 |
| 1,4-Dichlorobenzene | 106-46-7 | 120000 | ug/kg | ND | | 6.5 | ND | | 5.5 | ND | | 5.6 | ND | | 5.9 | ND | | 5.6 | ND | | 5.7 | ND | | 4.7 | ND | | 5.1 | ND | | 6.4 |
| 1,2-Dichlorobenzene | 95-50-1 | 92000000 | ug/kg | ND | | 6.5 | ND | | 5.5 | ND | | 5.6 | ND | | 5.9 | ND | | 5.6 | ND | | 5.7 | ND | | 4.7 | ND | | 5.1 | ND | | 6.4 |
| 1,3-Dichlorobenzene | 541-73-1 | 3100000 | ug/kg | ND | | 6.5 | ND | | 5.5 | ND | | 5.6 | ND | | 5.9 | ND | | 5.6 | ND | | 5.7 | ND | | 4.7 | ND | | 5.1 | ND | | 6.4 |
| Dichlorodifluoromethane | 75-71-8 | 200000000 | ug/kg | ND | | 6.5 | ND | | 5.5 | ND | | 5.6 | ND | | 5.9 | ND | | 5.6 | ND | | 5.7 | ND | | 4.7 | ND | | 5.1 | ND | | 6.4 |
| 1,1-Dichloroethane | 75-34-3 | 200000000 | ug/kg | ND | | 6.5 | ND | | 5.5 | ND | | 5.6 | ND | | 5.9 | ND | | 5.6 | ND | | 5.7 | ND | | 4.7 | ND | | 5.1 | ND | | 6.4 |
| 1,2-Dichloroethane | 107-06-2 | 31000 | ug/kg | ND | | 6.5 | ND | | 5.5 | ND | | 5.6 | ND | | 5.9 | ND | | 5.6 | ND | | 5.7 | ND | | 4.7 | ND | | 5.1 | ND | | 6.4 |
| trans-1,2-Dichloroethene | 156-60-5 | 20000000 | ug/kg | ND | | 6.5 | ND | | 5.5 | ND | | 5.6 | ND | | 5.9 | ND | | 5.6 | ND | | 5.7 | ND | | 4.7 | ND | | 5.1 | ND | | 6.4 |
| cis-1,2-Dichloroethene | 156-59-2 | 9200000 | ug/kg | ND | | 6.5 | ND | | 5.5 | ND | | 5.6 | ND | | 5.9 | ND | | 5.6 | ND | | 5.7 | ND | | 4.7 | ND | | 5.1 | ND | | 6.4 |
| 1,1-Dichloroethene | 75-35-4 | 51000000 | ug/kg | ND | | 6.5 | ND | | 5.5 | ND | | 5.6 | ND | | 5.9 | ND | | 5.6 | ND | | 5.7 | ND | | 4.7 | ND | | 5.1 | ND | | 6.4 |
| 1,2-Dichloropropane | 78-87-5 | 42000 | ug/kg | ND | | 6.5 | ND | | 5.5 | ND | | 5.6 | ND | | 5.9 | ND | | 5.6 | ND | | 5.7 | ND | | 4.7 | ND | | 5.1 | ND | | 6.4 |
| trans-1,3-Dichloropropene | 10061-02-6 | 29000 | ug/kg | ND | | 6.5 | ND | | 5.5 | ND | | 5.6 | ND | | 5.9 | ND | | 5.6 | ND | | 5.7 | ND | | 4.7 | ND | | 5.1 | ND | | 6.4 |
| cis-1,3-Dichloropropene | 10061-01-5 | 29000 | ug/kg | ND | | 6.5 | ND | | 5.5 | ND | | 5.6 | ND | | 5.9 | ND | | 5.6 | ND | | 5.7 | ND | | 4.7 | ND | | 5.1 | ND | | 6.4 |
| Ethylbenzene | 100-41-4 | 100000000 | ug/kg | ND | | 6.5 | ND | | 5.5 | ND | | 5.6 | ND | | 5.9 | ND | | 5.6 | ND | | 5.7 | ND | | 4.7 | ND | | 5.1 | ND | | 6.4 |
| 2-Hexanone | 591-78-6 | NS | ug/kg | ND | | 6.5 | ND | | 5.5 | ND | | 5.6 | ND | | 5.9 | ND | | 5.6 | ND | | 5.7 | ND | | 4.7 | ND | | 5.1 | ND | | 6.4 |
| Methyl Acetate | 79-20-9 | 1000000000 | ug/kg | ND | | 6.5 | ND | | 5.5 | ND | | 5.6 | ND | | 5.9 | ND | | 5.6 | ND | | 5.7 | ND | | 4.7 | ND | | 5.1 | ND | | 6.4 |
| Methyl tert-Butyl Ether | 1634-04-4 | 720000 | ug/kg | ND | | 6.5 | ND | | 5.5 | ND | | 5.6 | ND | | 5.9 | ND | | 5.6 | ND | | 5.7 | ND | | 4.7 | ND | | 5.1 | ND | | 6.4 |
| 4-Methyl-2-pentanone | 108-10-1 | NS | ug/kg | ND | | 6.5 | ND | | 5.5 | ND | | 5.6 | ND | | 5.9 | ND | | 5.6 | ND | | 5.7 | ND | | 4.7 | ND | | 5.1 | ND | | 6.4 |
| Methylcyclohexane | 108-87-2 | NS | ug/kg | ND | | 6.5 | ND | | 5.5 | ND | | 5.6 | ND | | 5.9 | ND | | 5.6 | ND | | 5.7 | ND | | 4.7 | ND | | 5.1 | ND | | 6.4 |
| Methylene Chloride | 75-09-2 | 380000 | ug/kg | 1.8 | J B | 6.5 | 1.9 | J B | 5.5 | 2.5 | J B | 5.6 | 2.6 | J B | 5.9 | 1.7 | J | 5.6 | 1.3 | J | 5.7 | 1 | J | 4.7 | 1.6 | J | 5.1 | 2.1 | J B | 6.4 |
| Styrene | 100-42-5 | 200000000 | ug/kg | ND | | 6.5 | ND | | 5.5 | ND | | 5.6 | ND | | 5.9 | ND | | 5.6 | ND | | 5.7 | ND | | 4.7 | ND | | 5.1 | ND | | 6.4 |
| 1,1,2,2-Tetrachloroethane | 79-34-5 | 14000 | ug/kg | ND | | 6.5 | ND | | 5.5 | ND | | 5.6 | ND | | 5.9 | ND | | 5.6 | ND | | 5.7 | ND | | 4.7 | ND | | 5.1 | ND | | 6.4 |
| Tetrachloroethene | 127-18-4 | 5300 | ug/kg | ND | | 6.5 | ND | | 5.5 | ND | | 5.6 | ND | | 5.9 | ND | | 5.6 | ND | | 5.7 | ND | | 4.7 | ND | | 5.1 | ND | | 6.4 |
| Toluene | 108-88-3 | 82000000 | ug/kg | ND | | 6.5 | ND | | 5.5 | ND | | 5.6 | ND | | 5.9 | ND | | 5.6 | ND | | 5.7 | ND | | 4.7 | ND | | 5.1 | ND | | 6.4 |
| Xylenes (Total) | 1330-20-7 | 200000000 | ug/kg | ND | | 19 | ND | | 16 | ND | | 17 | ND | | 18 | ND | | 17 | ND | | 17 | ND | | 14 | ND | | 15 | ND | | 19 |
| 1,1,2-Trichloro-1,2,2-trifluoroethane | 76-13-1 | 31000000000 | ug/kg | ND | | 6.5 | ND | | 5.5 | ND | | 5.6 | ND | | 5.9 | ND | | 5.6 | ND | | 5.7 | ND | | 4.7 | ND | | 5.1 | ND | | 6.4 |
| 1,2,4-Trichlorobenzene | 120-82-1 | 10000000 | ug/kg | ND | | 6.5 | ND | | 5.5 | ND | | 5.6 | ND | | 5.9 | ND | | 5.6 | ND | | 5.7 | ND | | 4.7 | ND | | 5.1 | ND | | 6.4 |
| 1,1,1-Trichloroethane | 71-55-6 | 290000000 | ug/kg | ND | | 6.5 | ND | | 5.5 | ND | | 5.6 | ND | | 5.9 | ND | | 5.6 | ND | | 5.7 | ND | | 4.7 | ND | | 5.1 | ND | | 6.4 |
| 1,1,2-Trichloroethane | 79-00-5 | 50000 | ug/kg | ND | | 6.5 | ND | | 5.5 | ND | | 5.6 | ND | | 5.9 | ND | | 5.6 | ND | | 5.7 | ND | | 4.7 | ND | | 5.1 | ND | | 6.4 |
| Trichloroethene | 79-01-6 | 7200 | ug/kg | ND | | 6.5 | ND | | 5.5 | ND | | 5.6 | ND | | 5.9 | ND | | 5.6 | ND | | 5.7 | ND | | 4.7 | ND | | 5.1 | ND | | 6.4 |
| Trichlorofluoromethane | 75-69-4 | 310000000 | ug/kg | ND | | 6.5 | ND | | 5.5 | ND | | 5.6 | ND | | 5.9 | ND | | 5.6 | ND | | 5.7 | ND | | 4.7 | ND | | 5.1 | ND | | 6.4 |
| Vinyl Chloride | 75-01-4 | 4000 | ug/kg | ND | | 6.5 | ND | | 5.5 | ND | | 5.6 | ND | | 5.9 | ND | | 5.6 | ND | | 5.7 | ND | | 4.7 | ND | | 5.1 | ND | | 6.4 |

# Table 4
## Summary of Soil Analytical Results
## Comparison to USEPA Region III RBCs
## U. S. Steel - Proposed Samax 14.2-Acre Parcel
## Fairless Hills, Pennsylvania

| | CAS No. | EPA Region III Industrial Soil RBC | Location ID | STP-1 | | | STP-1 | | | STP-2 | | | STP-2 | | | STP-3 | | | STP-3 | | | STP-3 | | | STP-4 | | | STP-4 | | |
|---|---|---|---|---|---|---|---|---|---|---|---|---|---|---|---|---|---|---|---|---|---|---|---|---|---|---|---|---|---|---|
| | | | Sample ID | 001-STP-1_1.5-2.0 | | | 002-STP-1_10-10.5 | | | 005-STP-2_1.5-2.0 | | | 006-STP-2_10.5-11.0 | | | 008-STP-3_1.5-2.0 | | | 009-DUP-1-103007 | | | 010-STP-3_10.5-11 | | | 014-STP-4_1.5-2.0 | | | 015-STP-4_11.5-12 | | |
| | | | Sample Date | 10/30/07 | | | 10/30/07 | | | 10/30/07 | | | 10/30/07 | | | 10/30/07 | | | 10/30/07 | | | 10/30/07 | | | 10/31/07 | | | 10/31/07 | | |
| | | | Depth to GW | NA | | | NA | | | 11.00 | | | 11.00 | | | 11.00 | | | 11.00 | | | 11.00 | | | 11.00 | | | 11.00 | | |
| | | | Start Depth (ft) | 1.50 | | | 10.00 | | | 1.50 | | | 10.50 | | | 1.50 | | | 1.50 | | | 10.50 | | | 1.50 | | | 11.50 | | |
| | | | End Depth (ft) | 2.00 | | | 10.50 | | | 2.00 | | | 11.00 | | | 2.00 | | | 2.00 | | | 11.00 | | | 2.00 | | | 12.00 | | |
| **TCL Semivolatiles** | | | Units | Result | Q | RL | Result | Q | RL | Result | Q | RL | Result | Q | RL | Result | Q | RL | Result | Q | RL | Result | Q | RL | Result | Q | RL | Result | Q | RL |
| Acenaphthene | 83-32-9 | 61320000 | ug/kg | ND | | 6.9 | 13 | | 7.9 | 35 | | 23 | ND | | 7.3 | ND | | 7.8 | ND | | 7.9 | 6.1 | J | 7.5 | ND | | 7.2 | ND | | 7.9 |
| Acenaphthylene | 208-96-8 | NS | ug/kg | ND | | 6.9 | 3.5 | J | 7.9 | 17 | J | 23 | ND | | 7.3 | ND | | 7.8 | ND | | 7.9 | 6.5 | J | 7.5 | ND | | 7.2 | ND | | 7.9 |
| Acetaphenone | 98-86-2 | 102200000 | ug/kg | ND | | 34 | ND | | 39 | ND | | 110 | ND | | 36 | ND | | 39 | ND | | 39 | ND | | 37 | 3.2 | J | 36 | 3 | J | 39 |
| Anthracene | 120-12-7 | 310000000 | ug/kg | 2.1 | J | 6.9 | 5.4 | J | 7.9 | 94 | | 23 | ND | | 7.3 | ND | | 7.8 | ND | | 7.9 | 16 | | 7.5 | ND | | 7.2 | ND | | 7.9 |
| Atrazine | 1912-24-9 | 13000 | ug/kg | ND | | 34 | ND | | 39 | ND | | 110 | ND | | 36 | ND | | 39 | ND | | 39 | ND | | 37 | ND | | 36 | ND | | 39 |
| Benzaldehyde | 100-52-7 | 100000000 | ug/kg | ND | | 34 | ND | | 39 | ND | | 110 | ND | | 36 | ND | | 39 | ND | | 39 | ND | | 37 | ND | | 36 | ND | | 39 |
| Benzo(a)anthracene | 56-55-3 | 3920 | ug/kg | 13 | | 6.9 | 21 | | 7.9 | 410 | | 23 | ND | | 7.3 | ND | | 7.8 | ND | | 7.9 | 74 | | 7.5 | 1.8 | J | 7.2 | ND | | 7.9 |
| Benzo(a)pyrene | 50-32-8 | 392 | ug/kg | 15 | | 6.9 | 23 | | 7.9 | 410 | | 23 | ND | | 7.3 | 1.3 | J | 7.8 | 1.6 | J | 7.9 | 99 | | 7.5 | 2.1 | J | 7.2 | ND | | 7.9 |
| Benzo(b)fluoranthene | 205-99-2 | 3920 | ug/kg | 23 | | 6.9 | 34 | | 7.9 | 550 | | 23 | ND | | 7.3 | 2.2 | J | 7.8 | ND | | 7.9 | 140 | | 7.5 | ND | | 7.2 | ND | | 7.9 |
| Benzo(g,h,i)perylene | 191-24-2 | NS | ug/kg | 12 | | 6.9 | 12 | | 7.9 | 300 | | 23 | ND | | 7.3 | ND | | 7.8 | 1.4 | J | 7.9 | 86 | | 7.5 | ND | | 7.2 | ND | | 7.9 |
| Benzo(k)fluoranthene | 207-08-9 | 39200 | ug/kg | 6.5 | J | 6.9 | 11 | | 7.9 | 190 | | 23 | ND | | 7.3 | ND | | 7.8 | ND | | 7.9 | 56 | | 7.5 | ND | | 7.2 | ND | | 7.9 |
| 1,1'-Biphenyl | 92-52-4 | 51100000 | ug/kg | 3.1 | J | 34 | ND | | 39 | ND | | 110 | ND | | 36 | ND | | 39 | ND | | 39 | ND | | 37 | ND | | 36 | ND | | 39 |
| bis(2-Chloroethoxy) methane | 111-91-1 | NS | ug/kg | ND | | 34 | ND | | 39 | ND | | 110 | ND | | 36 | ND | | 39 | ND | | 39 | ND | | 37 | ND | | 36 | ND | | 39 |
| bis(2-Chloroethyl) ether | 111-44-4 | 2600 | ug/kg | ND | | 6.9 | ND | | 7.9 | ND | | 23 | ND | | 7.3 | ND | | 7.8 | ND | | 7.9 | ND | | 7.5 | ND | | 7.2 | ND | | 7.9 |
| 2,2'-oxybis(1-Chloropropane) | 108-60-1 | 40900 | ug/kg | ND | | 6.9 | ND | | 7.9 | ND | | 23 | ND | | 7.3 | ND | | 7.8 | ND | | 7.9 | ND | | 7.5 | ND | | 7.2 | ND | | 7.9 |
| bis-(2-Ethylhexyl)phthalate | 117-81-7 | 204400 | ug/kg | 7.6 | J | 34 | ND | | 39 | ND | | 110 | 7.7 | J | 36 | 10 | J | 39 | 13 | J | 39 | ND | | 37 | 5 | J | 36 | ND | | 39 |
| 4-Bromophenyl-phenylether | 101-55-3 | NS | ug/kg | ND | | 34 | ND | | 39 | ND | | 110 | ND | | 36 | ND | | 39 | ND | | 39 | ND | | 37 | ND | | 36 | ND | | 39 |
| Butylbenzylphthalate | 85-68-7 | 200000000 | ug/kg | 7.6 | J | 34 | 9 | J | 39 | ND | | 110 | ND | | 36 | ND | | 39 | ND | | 39 | ND | | 37 | 3.8 | J | 36 | 6.2 | J | 39 |
| Caprolactam | 105-60-2 | 510000000 | ug/kg | 38 | | 34 | 56 | | 39 | ND | | 110 | 37 | | 36 | 40 | | 39 | 55 | | 39 | 34 | J | 37 | 10 | J | 36 | 13 | J | 39 |
| Carbazole | 86-74-8 | 143080 | ug/kg | 2.2 | J | 6.9 | 5.2 | J | 7.9 | 96 | | 23 | ND | | 7.3 | ND | | 7.8 | ND | | 7.9 | 16 | | 7.5 | ND | | 7.2 | ND | | 7.9 |
| 4-Chloro-3-methylphenol | 59-50-7 | NS | ug/kg | ND | | 34 | ND | | 39 | ND | | 110 | ND | | 36 | ND | | 39 | ND | | 39 | ND | | 37 | ND | | 36 | ND | | 39 |
| 4-Chloroaniline | 106-47-8 | 4100000 | ug/kg | ND | | 34 | ND | | 39 | ND | | 110 | ND | | 36 | ND | | 39 | ND | | 39 | ND | | 37 | ND | | 36 | ND | | 39 |
| 2-Chloronapthalene | 91-58-7 | 81760000 | ug/kg | ND | | 6.9 | ND | | 7.9 | ND | | 23 | ND | | 7.3 | ND | | 7.8 | ND | | 7.9 | ND | | 7.5 | ND | | 7.2 | ND | | 7.9 |
| 2-Chlorophenol | 95-57-8 | 5110000 | ug/kg | ND | | 34 | ND | | 39 | ND | | 110 | ND | | 36 | ND | | 39 | ND | | 39 | ND | | 37 | ND | | 36 | ND | | 39 |
| 4-Chlorophenyl-phenylether | 7005-72-3 | NS | ug/kg | ND | | 34 | ND | | 39 | ND | | 110 | ND | | 36 | ND | | 39 | ND | | 39 | ND | | 37 | ND | | 36 | ND | | 39 |
| Chrysene | 218-01-9 | 392000 | ug/kg | 18 | | 6.9 | 25 | | 7.9 | 450 | | 23 | ND | | 7.3 | ND | | 7.8 | ND | | 7.9 | 100 | | 7.5 | 2.4 | J | 7.2 | ND | | 7.9 |
| 2-Methylphenol | 95-48-7 | 51100000 | ug/kg | ND | | 34 | ND | | 39 | ND | | 110 | ND | | 36 | ND | | 39 | ND | | 39 | ND | | 37 | ND | | 36 | ND | | 39 |
| 4-Methylphenol | 106-44-5 | 5100000 | ug/kg | ND | | 34 | ND | | 39 | ND | | 110 | ND | | 36 | ND | | 39 | ND | | 39 | ND | | 37 | ND | | 36 | ND | | 39 |
| Dibenzo(a,h)anthracene | 53-70-3 | 392 | ug/kg | ND | | 6.9 | 4 | J | 7.9 | 68 | | 23 | ND | | 7.3 | ND | | 7.8 | ND | | 7.9 | 17 | | 7.5 | ND | | 7.2 | ND | | 7.9 |
| Dibenzofuran | 132-64-9 | NS | ug/kg | 2.3 | J | 34 | 5.6 | J | 39 | 21 | J | 110 | 2 | J | 36 | ND | | 39 | 2.1 | J | 39 | 4.5 | J | 37 | ND | | 36 | ND | | 39 |
| 3,3'-Dichlorobenzidine | 91-94-1 | 6359 | ug/kg | ND | | 34 | ND | | 39 | ND | | 110 | ND | | 36 | ND | | 39 | ND | | 39 | ND | | 37 | ND | | 36 | ND | | 39 |
| 2,4-Dichlorophenol | 120-83-2 | 3100000 | ug/kg | ND | | 6.9 | ND | | 7.9 | ND | | 23 | ND | | 7.3 | ND | | 7.8 | ND | | 7.9 | ND | | 7.5 | ND | | 7.2 | ND | | 7.9 |
| Diethylphthalate | 84-66-2 | 817600000 | ug/kg | ND | | 34 | 4.4 | J | 39 | ND | | 110 | ND | | 36 | ND | | 39 | ND | | 39 | ND | | 37 | ND | | 36 | ND | | 39 |
| 2,4-Dimethylphenol | 105-67-9 | 20000000 | ug/kg | ND | | 34 | ND | | 39 | ND | | 110 | ND | | 36 | ND | | 39 | ND | | 39 | ND | | 37 | ND | | 36 | ND | | 39 |
| Dimethylphthalate | 131-11-3 | NS | ug/kg | ND | | 34 | ND | | 39 | ND | | 110 | ND | | 36 | ND | | 39 | ND | | 39 | ND | | 37 | ND | | 36 | ND | | 39 |
| Di-n-butylphthalate | 84-74-2 | 102200000 | ug/kg | 16 | J | 34 | 19 | J | 39 | ND | | 110 | 17 | J | 36 | 17 | J | 39 | 21 | J | 39 | 16 | J | 37 | ND | | 36 | ND | | 39 |
| 4,6-Dinitro-2-methylphenol | 534-52-1 | NS | ug/kg | ND | | 180 | ND | | 200 | ND | | 590 | ND | | 180 | ND | | 200 | ND | | 200 | ND | | 190 | ND | | 180 | ND | | 200 |
| 2,4-Dinitrophenol | 51-28-5 | 2044000 | ug/kg | ND | | 180 | ND | | 200 | ND | | 590 | ND | | 180 | ND | | 200 | ND | | 200 | ND | | 190 | ND | | 180 | ND | | 200 |
| 2,4-Dinitrotoluene | 121-14-2 | 2000000 | ug/kg | ND | | 34 | ND | | 39 | ND | | 110 | ND | | 36 | ND | | 39 | ND | | 39 | ND | | 37 | ND | | 36 | ND | | 39 |
| 2,6-Dinitrotoluene | 606-20-2 | 1022000 | ug/kg | ND | | 34 | ND | | 39 | ND | | 110 | ND | | 36 | ND | | 39 | ND | | 39 | ND | | 37 | ND | | 36 | ND | | 39 |
| Fluoranthene | 206-44-0 | 40880000 | ug/kg | 37 | | 6.9 | 21 | | 7.9 | 1300 | | 23 | ND | | 7.3 | 2.7 | J | 7.8 | 3.2 | J | 7.9 | 260 | | 7.5 | 4.4 | J | 7.2 | ND | | 7.9 |
| Fluorene | 86-73-7 | 40880000 | ug/kg | 2.3 | J | 6.9 | 9.6 | | 7.9 | 34 | | 23 | ND | | 7.3 | ND | | 7.8 | ND | | 7.9 | 6.3 | J | 7.5 | ND | | 7.2 | ND | | 7.9 |
| Hexachlorobenzene | 118-74-1 | 1800 | ug/kg | ND | | 6.9 | ND | | 7.9 | ND | | 23 | ND | | 7.3 | ND | | 7.8 | ND | | 7.9 | ND | | 7.5 | ND | | 7.2 | ND | | 7.9 |
| Hexachlorobutadiene | 87-68-3 | 36687 | ug/kg | ND | | 6.9 | ND | | 7.9 | ND | | 23 | ND | | 7.3 | ND | | 7.8 | ND | | 7.9 | ND | | 7.5 | ND | | 7.2 | ND | | 7.9 |
| Hexachlorocyclopentadiene | 77-47-4 | 6132000 | ug/kg | ND | | 34 | ND | | 39 | ND | | 110 | ND | | 36 | ND | | 39 | ND | | 39 | ND | | 37 | ND | | 36 | ND | | 39 |
| Hexachloroethane | 67-72-1 | 204400 | ug/kg | ND | | 34 | ND | | 39 | ND | | 110 | ND | | 36 | ND | | 39 | ND | | 39 | ND | | 37 | ND | | 36 | ND | | 39 |
| Indeno(1,2,3-cd)pyrene | 193-39-5 | 3900 | ug/kg | 10 | | 6.9 | 11 | | 7.9 | 270 | | 23 | ND | | 7.3 | ND | | 7.8 | ND | | 7.9 | 77 | | 7.5 | ND | | 7.2 | ND | | 7.9 |
| Isophorone | 78-59-1 | 3012210.526 | ug/kg | ND | | 34 | ND | | 39 | ND | | 110 | ND | | 36 | ND | | 39 | ND | | 39 | ND | | 37 | ND | | 36 | ND | | 39 |
| 2-Methylnaphthalene | 91-57-6 | 4088000 | ug/kg | 2.3 | J | 6.9 | ND | | 7.9 | ND | | 23 | ND | | 7.3 | ND | | 7.8 | ND | | 7.9 | ND | | 7.5 | ND | | 7.2 | ND | | 7.9 |
| Naphthalene | 91-20-3 | 20440000 | ug/kg | 4.5 | J | 6.9 | 12 | | 7.9 | 8.1 | J | 23 | ND | | 7.3 | ND | | 7.8 | ND | | 7.9 | 3.3 | J | 7.5 | 1.9 | J | 7.2 | ND | | 7.9 |
| 2-Nitroaniline | 88-74-4 | NS | ug/kg | ND | | 180 | ND | | 200 | ND | | 590 | ND | | 180 | ND | | 200 | ND | | 200 | ND | | 190 | ND | | 180 | ND | | 200 |
| 3-Nitroaniline | 99-09-2 | NS | ug/kg | ND | | 180 | ND | | 200 | ND | | 590 | ND | | 180 | ND | | 200 | ND | | 200 | ND | | 190 | ND | | 180 | ND | | 200 |
| 4-Nitroaniline | 100-01-6 | NS | ug/kg | ND | | 180 | ND | | 200 | ND | | 590 | ND | | 180 | ND | | 200 | ND | | 200 | ND | | 190 | ND | | 180 | ND | | 200 |
| Nitrobenzene | 98-95-3 | 511000 | ug/kg | ND | | 6.9 | ND | | 7.9 | ND | | 23 | ND | | 7.3 | ND | | 7.8 | ND | | 7.9 | ND | | 7.5 | ND | | 7.2 | ND | | 7.9 |
| 2-Nitrophenol | 88-75-5 | NS | ug/kg | ND | | 34 | ND | | 39 | ND | | 110 | ND | | 36 | ND | | 39 | ND | | 39 | ND | | 37 | ND | | 36 | ND | | 39 |
| 4-Nitrophenol | 100-02-7 | NS | ug/kg | ND | | 180 | ND | | 200 | ND | | 590 | ND | | 180 | ND | | 200 | ND | | 200 | ND | | 190 | ND | | 180 | ND | | 200 |
| N-Nitrosodi-n-propylamine | 621-64-7 | 400 | ug/kg | ND | | 6.9 | ND | | 7.9 | ND | | 23 | ND | | 7.3 | ND | | 7.8 | ND | | 7.9 | ND | | 7.5 | ND | | 7.2 | ND | | 7.9 |
| N-Nitrosodiphenylamine | 86-30-6 | 584000 | ug/kg | ND | | 6.9 | ND | | 7.9 | ND | | 23 | ND | | 7.3 | ND | | 7.8 | ND | | 7.9 | ND | | 7.5 | ND | | 7.2 | ND | | 7.9 |
| Di-n-octylphthalate | 117-84-0 | NS | ug/kg | ND | | 34 | ND | | 39 | ND | | 110 | ND | | 36 | ND | | 39 | ND | | 39 | ND | | 37 | ND | | 36 | ND | | 39 |
| Pentachlorophenol | 87-86-5 | 23847 | ug/kg | ND | | 34 | ND | | 39 | ND | | 110 | ND | | 36 | ND | | 39 | ND | | 39 | ND | | 37 | ND | | 36 | ND | | 39 |
| Phenanthrene | 85-01-8 | NS | ug/kg | 23 | | 6.9 | 16 | | 7.9 | 680 | | 23 | 3.2 | J | 7.3 | 3.3 | J | 7.8 | 4.5 | J | 7.9 | 110 | | 7.5 | 4.6 | J | 7.2 | 3.2 | J | 7.9 |
| Phenol | 108-95-2 | 310000000 | ug/kg | ND | | 6.9 | ND | | 7.9 | ND | | 23 | ND | | 7.3 | ND | | 7.8 | ND | | 7.9 | ND | | 7.5 | ND | | 7.2 | ND | | 7.9 |
| Pyrene | 129-00-0 | 31000000 | ug/kg | 30 | | 6.9 | 21 | | 7.9 | 870 | | 23 | ND | | 7.3 | ND | | 7.8 | 2.5 | J | 7.9 | 170 | | 7.5 | 3.9 | J | 7.2 | ND | | 7.9 |
| 2,4,5-Trichlorophenol | 95-95-4 | 102200000 | ug/kg | ND | | 34 | ND | | 39 | ND | | 110 | ND | | 36 | ND | | 39 | ND | | 39 | ND | | 37 | ND | | 36 | ND | | 39 |
| 2,4,6-Trichlorophenol | 88-06-2 | 260145 | ug/kg | ND | | 34 | ND | | 39 | ND | | 110 | ND | | 36 | ND | | 39 | ND | | 39 | ND | | 37 | ND | | 36 | ND | | 39 |

# Table 4
## Summary of Soil Analytical Results
## Comparison to USEPA Region III RBCs
## U. S. Steel - Proposed Samax 14.2-Acre Parcel
## Fairless Hills, Pennsylvania

| | CAS No. | EPA Region III Industrial Soil RBC | Location ID | STP-1 | | | STP-1 | | | STP-2 | | | STP-2 | | | STP-3 | | | STP-3 | | | STP-3 | | | STP-4 | | | STP-4 | | |
|---|---|---|---|---|---|---|---|---|---|---|---|---|---|---|---|---|---|---|---|---|---|---|---|---|---|---|---|---|---|---|
| | | | Sample ID | 001-STP-1_1.5-2.0 | | | 002-STP-1_10-10.5 | | | 005-STP-2_1.5-2.0 | | | 006-STP-2_10.5-11.0 | | | 008-STP-3_1.5-2.0 | | | 009-DUP-1-103007 | | | 010-STP-3_10.5-11 | | | 014-STP-4_1.5-2.0 | | | 015-STP-4_11.5-12 | | |
| | | | Sample Date | 10/30/07 | | | 10/30/07 | | | 10/30/07 | | | 10/30/07 | | | 10/30/07 | | | 10/30/07 | | | 10/30/07 | | | 10/31/07 | | | 10/31/07 | | |
| | | | Depth to GW | NA | | | NA | | | 11.00 | | | 11.00 | | | 11.00 | | | 11.00 | | | 11.00 | | | 11.00 | | | 11.00 | | |
| | | | Start Depth (ft) | 1.50 | | | 10.00 | | | 1.50 | | | 10.50 | | | 1.50 | | | 1.50 | | | 10.50 | | | 1.50 | | | 11.50 | | |
| | | | End Depth (ft) | 2.00 | | | 10.50 | | | 2.00 | | | 11.00 | | | 2.00 | | | 2.00 | | | 11.00 | | | 2.00 | | | 12.00 | | |
| **PCB (ug/kg)** | | | **Units** | **Result** | **Q** | **RL** | **Result** | **Q** | **RL** | **Result** | **Q** | **RL** | **Result** | **Q** | **RL** | **Result** | **Q** | **RL** | **Result** | **Q** | **RL** | **Result** | **Q** | **RL** | **Result** | **Q** | **RL** | **Result** | **Q** | **RL** |
| Aroclor 1016 | 12674-11-2 | 40880 | ug/kg | ND | | 34 | ND | | 38 | ND | | 38 | ND | | 36 | ND | | 39 | ND | | 39 | ND | | 37 | ND | | 36 | ND | | 38 |
| Aroclor 1221 | 11104-28-2 | 1430.8 | ug/kg | ND | | 34 | ND | | 38 | ND | | 38 | ND | | 36 | ND | | 39 | ND | | 39 | ND | | 37 | ND | | 36 | ND | | 38 |
| Aroclor 1232 | 11141-16-5 | 1430.8 | ug/kg | ND | | 34 | ND | | 38 | ND | | 38 | ND | | 36 | ND | | 39 | ND | | 39 | ND | | 37 | ND | | 36 | ND | | 38 |
| Aroclor 1242 | 53469-21-9 | 1430.8 | ug/kg | ND | | 34 | ND | | 38 | ND | | 38 | ND | | 36 | ND | | 39 | ND | | 39 | ND | | 37 | ND | | 36 | ND | | 38 |
| Aroclor 1248 | 12672-29-6 | 1430.8 | ug/kg | ND | | 34 | ND | | 38 | ND | | 38 | ND | | 36 | ND | | 39 | ND | | 39 | ND | | 37 | ND | | 36 | ND | | 38 |
| Aroclor 1254 | 11097-69-1 | 1430.8 | ug/kg | ND | | 34 | ND | | 38 | 41 | | 38 | ND | | 36 | ND | | 39 | ND | | 39 | ND | | 37 | ND | | 36 | ND | | 38 |
| Aroclor 1260 | 11096-82-5 | 1430.8 | ug/kg | ND | | 34 | ND | | 38 | ND | | 38 | ND | | 36 | ND | | 39 | ND | | 39 | ND | | 37 | ND | | 36 | ND | | 38 |
| **PP Metals (mg/kg)** | | | **Units** | **Result** | **Q** | **RL** | **Result** | **Q** | **RL** | **Result** | **Q** | **RL** | **Result** | **Q** | **RL** | **Result** | **Q** | **RL** | **Result** | **Q** | **RL** | **Result** | **Q** | **RL** | **Result** | **Q** | **RL** | **Result** | **Q** | **RL** |
| Antimony | 7440-36-0 | 408.8 | mg/kg | 0.059 | B | 0.21 | 0.04 | B | 0.23 | 0.021 | B | 0.23 | 0.0053 | B | 0.22 | ND | | 0.23 | ND | | 0.23 | 0.029 | B | 0.22 | 0.022 | B | 0.22 | 0.017 | B | 0.24 |
| Arsenic | 7440-38-2 | 1.91 | mg/kg | **8.1** | | 0.1 | **4.7** | | 0.12 | **9.8** | | 0.11 | **2.5** | | 0.11 | **4.9** | | 0.12 | **5** | | 0.12 | **2** | | 0.11 | **2** | J | 0.11 | **3.4** | J | 0.12 |
| Beryllium | 7440-41-7 | 2044 | mg/kg | 1 | | 0.1 | 0.44 | | 0.12 | 0.47 | | 0.11 | 0.21 | | 0.11 | 0.39 | | 0.12 | 0.39 | | 0.12 | 0.23 | | 0.11 | 0.3 | | 0.11 | 0.29 | | 0.12 |
| Cadmium | 7440-43-9 | 511 | mg/kg | 0.12 | | 0.1 | 0.099 | B | 0.12 | 0.071 | B | 0.11 | 0.052 | B | 0.11 | 0.065 | B | 0.12 | 0.055 | B | 0.12 | 0.09 | B | 0.11 | 0.072 | B | 0.11 | 0.076 | B | 0.12 |
| Chromium | 7440-47-3 | NS | mg/kg | 31.3 | J | 0.21 | 9.9 | J | 0.23 | 16.9 | J | 0.23 | 5.5 | J | 0.22 | 11.4 | J | 0.23 | 11.2 | J | 0.23 | 6.2 | J | 0.22 | 6.1 | J | 0.22 | 7.1 | J | 0.24 |
| Copper | 7440-50-8 | 40880 | mg/kg | 27.2 | J | 0.21 | 12.6 | J | 0.23 | 12.5 | J | 0.23 | 6.8 | J | 0.22 | 10.8 | J | 0.23 | 11.6 | J | 0.23 | 8.1 | J | 0.22 | 9.3 | | 0.22 | 9 | | 0.24 |
| Lead | 7439-92-1 | NS | mg/kg | 12.9 | | 0.1 | 10.4 | | 0.12 | 23.6 | | 0.11 | 3.6 | | 0.11 | 9.4 | | 0.12 | 9.6 | | 0.12 | 9.4 | | 0.11 | 10 | | 0.11 | 6.7 | | 0.12 |
| Mercury | 7439-97-6 | NS | mg/kg | ND | | 0.034 | 0.031 | B | 0.039 | 0.025 | B | 0.038 | ND | | 0.036 | 0.024 | B | 0.039 | 0.03 | B | 0.039 | 0.026 | B | 0.037 | 0.013 | B | 0.036 | 0.016 | B | 0.039 |
| Nickel | 7440-02-0 | 20440 | mg/kg | 20.7 | | 0.1 | 12.8 | | 0.12 | 9.5 | | 0.11 | 7.1 | | 0.11 | 12.9 | | 0.12 | 12.8 | | 0.12 | 7.9 | | 0.11 | 7.6 | J | 0.11 | 11.5 | J | 0.12 |
| Selenium | 7782-49-2 | 5110 | mg/kg | 0.68 | J | 0.52 | 0.56 | B J | 0.59 | 0.74 | J | 0.57 | 0.32 | B J | 0.54 | 0.5 | B J | 0.58 | 0.54 | B J | 0.59 | 0.41 | B J | 0.56 | 0.29 | B | 0.55 | 0.35 | B | 0.59 |
| Silver | 7440-22-4 | 5110 | mg/kg | 0.031 | B | 0.1 | ND | | 0.12 | ND | | 0.11 | ND | | 0.11 | ND | | 0.12 | ND | | 0.12 | 0.0049 | B | 0.11 | ND | | 0.11 | ND | | 0.12 |
| Thallium | 7440-28-0 | 71.54 | mg/kg | 0.47 | J | 0.1 | 0.11 | B J | 0.12 | 0.1 | B J | 0.11 | 0.027 | B J | 0.11 | 0.084 | B J | 0.12 | 0.084 | B J | 0.12 | 0.027 | B J | 0.11 | 0.054 | B | 0.11 | 0.05 | B | 0.12 |
| Zinc | 7440-66-6 | 306600 | mg/kg | 53.3 | J | 0.52 | 31.8 | J | 0.59 | 36.9 | J | 0.57 | 19.8 | J | 0.54 | 28.4 | J | 0.58 | 28.8 | J | 0.59 | 27 | J | 0.56 | 20.6 | J | 0.55 | 24.7 | J | 0.59 |
| **General Chemistry** | | | **Units** | **Result** | **Q** | **RL** | **Result** | **Q** | **RL** | **Result** | **Q** | **RL** | **Result** | **Q** | **RL** | **Result** | **Q** | **RL** | **Result** | **Q** | **RL** | **Result** | **Q** | **RL** | **Result** | **Q** | **RL** | **Result** | **Q** | **RL** |
| Percent Solids | none | NS | percent | 96.9 | | | 85.2 | | | 87 | | | 92.1 | | | 85.6 | | | 85.3 | | | 89.5 | | | 92.9 | | | 85.1 | | |

# Table 4
## Summary of Soil Analytical Results
## Comparison to USEPA Region III RBCs
## U. S. Steel - Proposed Samax 14.2-Acre Parcel
## Fairless Hills, Pennsylvania

| | CAS No. | EPA Region III Industrial Soil RBC | Location ID | STP-5 | | | STP-5 | | | STP-6 | | | STP-6 | | | STP-7 | | | STP-7 | | | STP-8 | | | STP-8 | | | STP-9 | | | STP-9 | | |
|---|---|---|---|---|---|---|---|---|---|---|---|---|---|---|---|---|---|---|---|---|---|---|---|---|---|---|---|---|---|---|---|---|---|
| | | | Sample ID | 017-STP-5_1.5-2.0 | | | 018-STP-5_10.5-11 | | | 019-STP-6_1.5-2.0 | | | 020-STP-6_7.5-8 | | | 021-STP-7_1.5-2.0 | | | 022-STP-7_3.5-4.0 | | | 023-STP-8_1.5-2.0 | | | 024-STP-8_4.5-5.0 | | | 025-STP-9_1.5-2.0 | | | 026-STP-9_5.5-6.0 | | |
| | | | Sample Date | 10/31/07 | | | 10/31/07 | | | 10/31/07 | | | 10/31/07 | | | 10/31/07 | | | 10/31/07 | | | 10/31/07 | | | 10/31/07 | | | 10/31/07 | | | 08/31/07 | | |
| | | | Depth to GW | 11.00 | | | 11.00 | | | 8.00 | | | 8.00 | | | 4.00 | | | 4.00 | | | 5.00 | | | 5.00 | | | 6.00 | | | 6.00 | | |
| | | | Start Depth (ft) | 1.50 | | | 10.50 | | | 1.50 | | | 7.50 | | | 1.50 | | | 3.50 | | | 1.50 | | | 4.50 | | | 1.50 | | | 7.50 | | |
| | | | End Depth (ft) | 2.00 | | | 11.00 | | | 2.00 | | | 8.00 | | | 2.00 | | | 4.00 | | | 2.00 | | | 5.00 | | | 2.00 | | | 8.00 | | |
| **TCL Volatiles** | | | **Units** | **Result** | **Q** | **RL** | **Result** | **Q** | **RL** | **Result** | **Q** | **RL** | **Result** | **Q** | **RL** | **Result** | **Q** | **RL** | **Result** | **Q** | **RL** | **Result** | **Q** | **RL** | **Result** | **Q** | **RL** | **Result** | **Q** | **RL** | **Result** | **Q** | **RL** |
| Acetone | 67-64-1 | 920000000 | ug/kg | ND | | 21 | ND | | 20 | ND | | 24 | 9.5 | J | 22 | ND | | 21 | ND | | 23 | ND | | 24 | ND | | 33 | ND | | 21 | 15 | J | 25 |
| Benzene | 71-43-2 | 52000 | ug/kg | ND | | 5.2 | ND | | 5.1 | ND | | 5.9 | ND | | 5.5 | ND | | 5.3 | ND | | 5.8 | ND | | 5.9 | ND | | 8.3 | ND | | 5.3 | ND | | 6.2 |
| Bromodichloromethane | 75-27-4 | 46000 | ug/kg | ND | | 5.2 | ND | | 5.1 | ND | | 5.9 | ND | | 5.5 | ND | | 5.3 | ND | | 5.8 | ND | | 5.9 | ND | | 8.3 | ND | | 5.3 | ND | | 6.2 |
| Bromoform | 75-25-2 | 360000 | ug/kg | ND | | 5.2 | ND | | 5.1 | ND | | 5.9 | ND | | 5.5 | ND | | 5.3 | ND | | 5.8 | ND | | 5.9 | ND | | 8.3 | ND | | 5.3 | ND | | 6.2 |
| Bromomethane | 74-83-9 | 1400000 | ug/kg | ND | | 5.2 | ND | | 5.1 | ND | | 5.9 | ND | | 5.5 | ND | | 5.3 | ND | | 5.8 | ND | | 5.9 | ND | | 8.3 | ND | | 5.3 | ND | | 6.2 |
| 2-Butanone | 78-93-3 | 610000000 | ug/kg | ND | | 5.2 | ND | | 5.1 | ND | | 5.9 | ND | | 5.5 | ND | | 5.3 | ND | | 5.8 | ND | | 5.9 | ND | | 8.3 | ND | | 5.3 | ND | | 6.2 |
| Carbon Disulfide | 75-15-0 | 100000000 | ug/kg | ND | | 5.2 | ND | | 5.1 | ND | | 5.9 | ND | | 5.5 | ND | | 5.3 | ND | | 5.8 | ND | | 5.9 | ND | | 8.3 | ND | | 5.3 | ND | | 6.2 |
| Carbon Tetrachloride | 56-23-5 | 22000 | ug/kg | ND | | 5.2 | ND | | 5.1 | ND | | 5.9 | ND | | 5.5 | ND | | 5.3 | ND | | 5.8 | ND | | 5.9 | ND | | 8.3 | ND | | 5.3 | ND | | 6.2 |
| Chlorobenzene | 108-90-7 | 20000000 | ug/kg | ND | | 5.2 | ND | | 5.1 | ND | | 5.9 | ND | | 5.5 | ND | | 5.3 | ND | | 5.8 | ND | | 5.9 | ND | | 8.3 | ND | | 5.3 | ND | | 6.2 |
| Chloroethane | 75-00-3 | 990000 | ug/kg | ND | | 5.2 | ND | | 5.1 | ND | | 5.9 | ND | | 5.5 | ND | | 5.3 | ND | | 5.8 | ND | | 5.9 | ND | | 8.3 | ND | | 5.3 | ND | | 6.2 |
| Chloroform | 67-66-3 | 10000000 | ug/kg | ND | | 5.2 | ND | | 5.1 | ND | | 5.9 | ND | | 5.5 | ND | | 5.3 | ND | | 5.8 | ND | | 5.9 | ND | | 8.3 | ND | | 5.3 | ND | | 6.2 |
| Chloromethane | 74-87-3 | NS | ug/kg | ND | | 5.2 | ND | | 5.1 | ND | | 5.9 | ND | | 5.5 | ND | | 5.3 | ND | | 5.8 | ND | | 5.9 | ND | | 8.3 | ND | | 5.3 | ND | | 6.2 |
| Isopropylbenzene | 98-82-8 | 100000000 | ug/kg | ND | | 5.2 | ND | | 5.1 | ND | | 5.9 | ND | | 5.5 | ND | | 5.3 | ND | | 5.8 | ND | | 5.9 | ND | | 8.3 | ND | | 5.3 | ND | | 6.2 |
| Cyclohexane | 110-82-7 | NS | ug/kg | ND | | 5.2 | ND | | 5.1 | ND | | 5.9 | ND | | 5.5 | ND | | 5.3 | ND | | 5.8 | ND | | 5.9 | ND | | 8.3 | ND | | 5.3 | ND | | 6.2 |
| 1,2-Dibromoethane | 106-93-4 | 1400 | ug/kg | ND | | 5.2 | ND | | 5.1 | ND | | 5.9 | ND | | 5.5 | ND | | 5.3 | ND | | 5.8 | ND | | 5.9 | ND | | 8.3 | ND | | 5.3 | ND | | 6.2 |
| 1,2-Dibromo-3-chloropropane | 96-12-8 | 2000 | ug/kg | ND | | 5.2 | ND | | 5.1 | ND | | 5.9 | ND | | 5.5 | ND | | 5.3 | ND | | 5.8 | ND | | 5.9 | ND | | 8.3 | ND | | 5.3 | ND | | 6.2 |
| Dibromochloromethane | 124-48-1 | 34000 | ug/kg | ND | | 5.2 | ND | | 5.1 | ND | | 5.9 | ND | | 5.5 | ND | | 5.3 | ND | | 5.8 | ND | | 5.9 | ND | | 8.3 | ND | | 5.3 | ND | | 6.2 |
| 1,4-Dichlorobenzene | 106-46-7 | 120000 | ug/kg | ND | | 5.2 | ND | | 5.1 | ND | | 5.9 | ND | | 5.5 | ND | | 5.3 | ND | | 5.8 | ND | | 5.9 | ND | | 8.3 | ND | | 5.3 | ND | | 6.2 |
| 1,2-Dichlorobenzene | 95-50-1 | 92000000 | ug/kg | ND | | 5.2 | ND | | 5.1 | ND | | 5.9 | ND | | 5.5 | ND | | 5.3 | ND | | 5.8 | ND | | 5.9 | ND | | 8.3 | ND | | 5.3 | ND | | 6.2 |
| 1,3-Dichlorobenzene | 541-73-1 | 3100000 | ug/kg | ND | | 5.2 | ND | | 5.1 | ND | | 5.9 | ND | | 5.5 | ND | | 5.3 | ND | | 5.8 | ND | | 5.9 | ND | | 8.3 | ND | | 5.3 | ND | | 6.2 |
| Dichlorodifluoromethane | 75-71-8 | 200000000 | ug/kg | ND | | 5.2 | ND | | 5.1 | ND | | 5.9 | ND | | 5.5 | ND | | 5.3 | ND | | 5.8 | ND | | 5.9 | ND | | 8.3 | ND | | 5.3 | ND | | 6.2 |
| 1,1-Dichloroethane | 75-34-3 | 200000000 | ug/kg | ND | | 5.2 | ND | | 5.1 | ND | | 5.9 | ND | | 5.5 | ND | | 5.3 | ND | | 5.8 | ND | | 5.9 | ND | | 8.3 | ND | | 5.3 | ND | | 6.2 |
| 1,2-Dichloroethane | 107-06-2 | 31000 | ug/kg | ND | | 5.2 | ND | | 5.1 | ND | | 5.9 | ND | | 5.5 | ND | | 5.3 | ND | | 5.8 | ND | | 5.9 | ND | | 8.3 | ND | | 5.3 | ND | | 6.2 |
| trans-1,2-Dichloroethene | 156-60-5 | 20000000 | ug/kg | ND | | 5.2 | ND | | 5.1 | ND | | 5.9 | ND | | 5.5 | ND | | 5.3 | ND | | 5.8 | ND | | 5.9 | ND | | 8.3 | ND | | 5.3 | ND | | 6.2 |
| cis-1,2-Dichloroethene | 156-59-2 | 9200000 | ug/kg | ND | | 5.2 | ND | | 5.1 | ND | | 5.9 | ND | | 5.5 | ND | | 5.3 | ND | | 5.8 | ND | | 5.9 | ND | | 8.3 | ND | | 5.3 | ND | | 6.2 |
| 1,1-Dichloroethene | 75-35-4 | 51000000 | ug/kg | ND | | 5.2 | ND | | 5.1 | ND | | 5.9 | ND | | 5.5 | ND | | 5.3 | ND | | 5.8 | ND | | 5.9 | ND | | 8.3 | ND | | 5.3 | ND | | 6.2 |
| 1,2-Dichloropropane | 78-87-5 | 42000 | ug/kg | ND | | 5.2 | ND | | 5.1 | ND | | 5.9 | ND | | 5.5 | ND | | 5.3 | ND | | 5.8 | ND | | 5.9 | ND | | 8.3 | ND | | 5.3 | ND | | 6.2 |
| trans-1,3-Dichloropropene | 10061-02-6 | 29000 | ug/kg | ND | | 5.2 | ND | | 5.1 | ND | | 5.9 | ND | | 5.5 | ND | | 5.3 | ND | | 5.8 | ND | | 5.9 | ND | | 8.3 | ND | | 5.3 | ND | | 6.2 |
| cis-1,3-Dichloropropene | 10061-01-5 | 2900000 | ug/kg | ND | | 5.2 | ND | | 5.1 | ND | | 5.9 | ND | | 5.5 | ND | | 5.3 | ND | | 5.8 | ND | | 5.9 | ND | | 8.3 | ND | | 5.3 | ND | | 6.2 |
| Ethylbenzene | 100-41-4 | 100000000 | ug/kg | ND | | 5.2 | ND | | 5.1 | ND | | 5.9 | ND | | 5.5 | ND | | 5.3 | ND | | 5.8 | ND | | 5.9 | ND | | 8.3 | ND | | 5.3 | ND | | 6.2 |
| 2-Hexanone | 591-78-6 | NS | ug/kg | ND | | 5.2 | ND | | 5.1 | ND | | 5.9 | ND | | 5.5 | ND | | 5.3 | ND | | 5.8 | ND | | 5.9 | ND | | 8.3 | ND | | 5.3 | ND | | 6.2 |
| Methyl Acetate | 79-20-9 | 1000000000 | ug/kg | ND | | 5.2 | ND | | 5.1 | ND | | 5.9 | ND | | 5.5 | ND | | 5.3 | ND | | 5.8 | ND | | 5.9 | ND | | 8.3 | ND | | 5.3 | ND | | 6.2 |
| Methyl tert-Butyl Ether | 1634-04-4 | 720000 | ug/kg | ND | | 5.2 | ND | | 5.1 | ND | | 5.9 | ND | | 5.5 | ND | | 5.3 | ND | | 5.8 | ND | | 5.9 | ND | | 8.3 | ND | | 5.3 | ND | | 6.2 |
| 4-Methyl-2-pentanone | 108-10-1 | NS | ug/kg | ND | | 5.2 | ND | | 5.1 | ND | | 5.9 | ND | | 5.5 | ND | | 5.3 | ND | | 5.8 | ND | | 5.9 | ND | | 8.3 | ND | | 5.3 | ND | | 6.2 |
| Methylcyclohexane | 108-87-2 | NS | ug/kg | ND | | 5.2 | ND | | 5.1 | ND | | 5.9 | ND | | 5.5 | ND | | 5.3 | ND | | 5.8 | ND | | 5.9 | ND | | 8.3 | ND | | 5.3 | ND | | 6.2 |
| Methylene Chloride | 75-09-2 | 380000 | ug/kg | 2.3 | J B | 5.2 | 1 | J | 5.1 | 1.9 | J | 5.9 | 2.2 | J | 5.5 | 1.4 | J | 5.3 | 1.9 | J | 5.8 | 3.1 | J | 5.9 | 4 | J B | 8.3 | 0.94 | J | 5.3 | 2.2 | J | 6.2 |
| Styrene | 100-42-5 | 200000000 | ug/kg | ND | | 5.2 | ND | | 5.1 | ND | | 5.9 | ND | | 5.5 | ND | | 5.3 | ND | | 5.8 | ND | | 5.9 | ND | | 8.3 | ND | | 5.3 | ND | | 6.2 |
| 1,1,2,2-Tetrachloroethane | 79-34-5 | 14000 | ug/kg | ND | | 5.2 | ND | | 5.1 | ND | | 5.9 | ND | | 5.5 | ND | | 5.3 | ND | | 5.8 | ND | | 5.9 | ND | | 8.3 | ND | | 5.3 | ND | | 6.2 |
| Tetrachloroethene | 127-18-4 | 5300 | ug/kg | ND | | 5.2 | ND | | 5.1 | ND | | 5.9 | ND | | 5.5 | ND | | 5.3 | ND | | 5.8 | ND | | 5.9 | ND | | 8.3 | ND | | 5.3 | ND | | 6.2 |
| Toluene | 108-88-3 | 82000000 | ug/kg | ND | | 5.2 | ND | | 5.1 | ND | | 5.9 | ND | | 5.5 | ND | | 5.3 | ND | | 5.8 | ND | | 5.9 | ND | | 8.3 | ND | | 5.3 | ND | | 6.2 |
| Xylenes (Total) | 1330-20-7 | 200000000 | ug/kg | ND | | 16 | ND | | 15 | ND | | 18 | ND | | 16 | ND | | 16 | ND | | 17 | ND | | 18 | ND | | 25 | ND | | 16 | ND | | 18 |
| 1,1,2-Trichloro-1,2,2-trifluoroethane | 76-13-1 | 31000000000 | ug/kg | ND | | 5.2 | ND | | 5.1 | ND | | 5.9 | ND | | 5.5 | ND | | 5.3 | ND | | 5.8 | ND | | 5.9 | ND | | 8.3 | ND | | 5.3 | ND | | 6.2 |
| 1,2,4-Trichlorobenzene | 120-82-1 | 10000000 | ug/kg | ND | | 5.2 | ND | | 5.1 | ND | | 5.9 | ND | | 5.5 | ND | | 5.3 | ND | | 5.8 | ND | | 5.9 | ND | | 8.3 | ND | | 5.3 | ND | | 6.2 |
| 1,1,1-Trichloroethane | 71-55-6 | 290000000 | ug/kg | ND | | 5.2 | ND | | 5.1 | ND | | 5.9 | ND | | 5.5 | ND | | 5.3 | ND | | 5.8 | ND | | 5.9 | ND | | 8.3 | ND | | 5.3 | ND | | 6.2 |
| 1,1,2-Trichloroethane | 79-00-5 | 50000 | ug/kg | ND | | 5.2 | ND | | 5.1 | ND | | 5.9 | ND | | 5.5 | ND | | 5.3 | ND | | 5.8 | ND | | 5.9 | ND | | 8.3 | ND | | 5.3 | ND | | 6.2 |
| Trichloroethene | 79-01-6 | 7200 | ug/kg | ND | | 5.2 | ND | | 5.1 | ND | | 5.9 | ND | | 5.5 | ND | | 5.3 | ND | | 5.8 | ND | | 5.9 | ND | | 8.3 | ND | | 5.3 | ND | | 6.2 |
| Trichlorofluoromethane | 75-69-4 | 310000000 | ug/kg | ND | | 5.2 | ND | | 5.1 | ND | | 5.9 | ND | | 5.5 | ND | | 5.3 | ND | | 5.8 | ND | | 5.9 | ND | | 8.3 | ND | | 5.3 | ND | | 6.2 |
| Vinyl Chloride | 75-01-4 | 4000 | ug/kg | ND | | 5.2 | ND | | 5.1 | ND | | 5.9 | ND | | 5.5 | ND | | 5.3 | ND | | 5.8 | ND | | 5.9 | ND | | 8.3 | ND | | 5.3 | ND | | 6.2 |

# Table 4
## Summary of Soil Analytical Results
## Comparison to USEPA Region III RBCs
## U. S. Steel - Proposed Samax 14.2-Acre Parcel
## Fairless Hills, Pennsylvania

| | CAS No. | EPA Region III Industrial Soil RBC | Location ID | STP-5 | | | STP-5 | | | STP-6 | | | STP-6 | | | STP-7 | | | STP-7 | | | STP-8 | | | STP-8 | | | STP-9 | | | STP-9 | | |
|---|---|---|---|---|---|---|---|---|---|---|---|---|---|---|---|---|---|---|---|---|---|---|---|---|---|---|---|---|---|---|---|---|---|
| | | | Sample ID | 017-STP-5_1.5-2.0 | | | 018-STP-5_10.5-11 | | | 019-STP-6_1.5-2.0 | | | 020-STP-6_7.5-8 | | | 021-STP-7_1.5-2.0 | | | 022-STP-7_3.5-4.0 | | | 023-STP-8_1.5-2.0 | | | 024-STP-8_4.5-5.0 | | | 025-STP-9_1.5-2.0 | | | 026-STP-9_5.5-6.0 | | |
| | | | Sample Date | 10/31/07 | | | 10/31/07 | | | 10/31/07 | | | 10/31/07 | | | 10/31/07 | | | 10/31/07 | | | 10/31/07 | | | 10/31/07 | | | 10/31/07 | | | 08/31/07 | | |
| | | | Depth to GW | 11.00 | | | 11.00 | | | 8.00 | | | 8.00 | | | 4.00 | | | 4.00 | | | 5.00 | | | 5.00 | | | 6.00 | | | 6.00 | | |
| | | | Start Depth (ft) | 1.50 | | | 10.50 | | | 1.50 | | | 7.50 | | | 1.50 | | | 3.50 | | | 1.50 | | | 4.50 | | | 1.50 | | | 7.50 | | |
| | | | End Depth (ft) | 2.00 | | | 11.00 | | | 2.00 | | | 8.00 | | | 2.00 | | | 4.00 | | | 2.00 | | | 5.00 | | | 2.00 | | | 8.00 | | |
| **TCL Semivolatiles** | | | Units | Result | Q | RL | Result | Q | RL | Result | Q | RL | Result | Q | RL | Result | Q | RL | Result | Q | RL | Result | Q | RL | Result | Q | RL | Result | Q | RL | Result | Q | RL |
| Acenaphthene | 83-32-9 | 61320000 | ug/kg | ND | | 7.2 | ND | | 7.7 | ND | | 7.1 | 3.6 | J | 8 | ND | | 7.2 | ND | | 7.4 | ND | | 7.1 | 5.1 | J | 10 | 1.8 | J | 7.1 | ND | | 7.7 |
| Acenaphthylene | 208-96-8 | NS | ug/kg | 4.2 | J | 7.2 | ND | | 7.7 | ND | | 7.1 | 20 | | 8 | ND | | 7.2 | ND | | 7.4 | 2 | J | 7.1 | 26 | | 10 | 5.4 | J | 7.1 | ND | | 7.7 |
| Acetaphenone | 98-86-2 | 102200000 | ug/kg | 3 | J | 35 | 2.7 | J | 38 | ND | | 35 | 2.8 | J | 39 | ND | | 35 | ND | | 37 | ND | | 35 | ND | | 51 | 3.1 | J | 35 | 3.3 | J | 38 |
| Anthracene | 120-12-7 | 310000000 | ug/kg | 3.8 | J | 7.2 | ND | | 7.7 | ND | | 7.1 | 17 | | 8 | ND | | 7.2 | ND | | 7.4 | 3.6 | J | 7.1 | 29 | | 10 | 6.3 | J | 7.1 | ND | | 7.7 |
| Atrazine | 1912-24-9 | 13000 | ug/kg | ND | | 35 | ND | | 38 | ND | | 35 | ND | | 39 | ND | | 35 | ND | | 37 | ND | | 35 | ND | | 51 | ND | | 35 | ND | | 38 |
| Benzaldehyde | 100-52-7 | 100000000 | ug/kg | ND | | 35 | ND | | 38 | ND | | 35 | ND | | 39 | ND | | 35 | ND | | 37 | ND | | 35 | ND | | 51 | ND | | 35 | ND | | 38 |
| Benzo(a)anthracene | 56-55-3 | 3920 | ug/kg | 15 | | 7.2 | ND | | 7.7 | ND | | 7.1 | 44 | | 8 | 1.5 | J | 7.2 | 3.1 | J | 7.4 | 19 | | 7.1 | 63 | | 10 | 18 | | 7.1 | 6.3 | J | 7.7 |
| Benzo(a)pyrene | 50-32-8 | 392 | ug/kg | 16 | | 7.2 | ND | | 7.7 | ND | | 7.1 | 51 | | 8 | 1.6 | J | 7.2 | 3.2 | J | 7.4 | 21 | | 7.1 | 60 | | 10 | 18 | | 7.1 | 7.2 | J | 7.7 |
| Benzo(b)fluoranthene | 205-99-2 | 3920 | ug/kg | 21 | | 7.2 | ND | | 7.7 | ND | | 7.1 | 58 | | 8 | ND | | 7.2 | 4.3 | J | 7.4 | 30 | | 7.1 | 76 | | 10 | 26 | | 7.1 | 9.3 | | 7.7 |
| Benzo(g,h,i)perylene | 191-24-2 | NS | ug/kg | 12 | | 7.2 | ND | | 7.7 | ND | | 7.1 | 42 | | 8 | ND | | 7.2 | 2 | J | 7.4 | 18 | | 7.1 | 45 | | 10 | 16 | | 7.1 | 5.9 | J | 7.7 |
| Benzo(k)fluoranthene | 207-08-9 | 39200 | ug/kg | 7.3 | | 7.2 | ND | | 7.7 | ND | | 7.1 | 20 | | 8 | ND | | 7.2 | 1.2 | J | 7.4 | 12 | | 7.1 | 31 | | 10 | 6 | J | 7.1 | 3.7 | J | 7.7 |
| 1,1'-Biphenyl | 92-52-4 | 51100000 | ug/kg | ND | | 35 | ND | | 38 | ND | | 35 | ND | | 39 | ND | | 35 | ND | | 37 | ND | | 35 | 4.9 | J | 51 | 1.9 | J | 35 | ND | | 38 |
| bis(2-Chloroethoxy) methane | 111-91-1 | NS | ug/kg | ND | | 35 | ND | | 38 | ND | | 35 | ND | | 39 | ND | | 35 | ND | | 37 | ND | | 35 | ND | | 51 | ND | | 35 | ND | | 38 |
| bis(2-Chloroethyl) ether | 111-44-4 | 2600 | ug/kg | ND | | 7.2 | ND | | 7.7 | ND | | 7.1 | ND | | 8 | ND | | 7.2 | ND | | 7.4 | ND | | 7.1 | ND | | 10 | ND | | 7.1 | ND | | 7.7 |
| 2,2'-oxybis(1-Chloropropane) | 108-60-1 | 40900 | ug/kg | ND | | 7.2 | ND | | 7.7 | ND | | 7.1 | ND | | 8 | ND | | 7.2 | ND | | 7.4 | ND | | 7.1 | ND | | 10 | ND | | 7.1 | ND | | 7.7 |
| bis-(2-Ethylhexyl)phthalate | 117-81-7 | 204400 | ug/kg | 7.1 | J | 35 | 5.6 | J | 38 | 4.2 | J | 35 | 5.6 | J | 39 | 5 | J | 35 | 5.3 | J | 37 | 5.4 | J | 35 | ND | | 51 | 8.6 | J | 35 | 6.3 | J | 38 |
| 4-Bromophenyl-phenylether | 101-55-3 | NS | ug/kg | ND | | 35 | ND | | 38 | ND | | 35 | ND | | 39 | ND | | 35 | ND | | 37 | ND | | 35 | ND | | 51 | ND | | 35 | ND | | 38 |
| Butylbenzylphthalate | 85-68-7 | 200000000 | ug/kg | 5.9 | J | 35 | 5.5 | J | 38 | 4.3 | J | 35 | 3.8 | J | 39 | 3.5 | J | 35 | 3.7 | J | 37 | 3.2 | J | 35 | ND | | 51 | ND | | 35 | ND | | 38 |
| Caprolactam | 105-60-2 | 510000000 | ug/kg | 9.5 | J | 35 | 13 | J | 38 | 9.5 | J | 35 | 10 | J | 39 | 7.3 | J | 35 | ND | | 37 | ND | | 35 | ND | | 51 | 9.2 | J | 35 | ND | | 38 |
| Carbazole | 86-74-8 | 143080 | ug/kg | ND | | 7.2 | ND | | 7.7 | ND | | 7.1 | 4.3 | J | 8 | ND | | 7.2 | ND | | 7.4 | 2.9 | J | 7.1 | 7.5 | J | 10 | 1.9 | J | 7.1 | ND | | 7.7 |
| 4-Chloro-3-methylphenol | 59-50-7 | NS | ug/kg | ND | | 35 | ND | | 38 | ND | | 35 | ND | | 39 | ND | | 35 | ND | | 37 | ND | | 35 | ND | | 51 | ND | | 35 | ND | | 38 |
| 4-Chloroaniline | 106-47-8 | 4100000 | ug/kg | ND | | 35 | ND | | 38 | ND | | 35 | ND | | 39 | ND | | 35 | ND | | 37 | ND | | 35 | ND | | 51 | ND | | 35 | ND | | 38 |
| 2-Chloronapthalene | 91-58-7 | 81760000 | ug/kg | ND | | 7.2 | ND | | 7.7 | ND | | 7.1 | ND | | 8 | ND | | 7.2 | ND | | 7.4 | ND | | 7.1 | ND | | 10 | ND | | 7.1 | ND | | 7.7 |
| 2-Chlorophenol | 95-57-8 | 5110000 | ug/kg | ND | | 35 | ND | | 38 | ND | | 35 | ND | | 39 | ND | | 35 | ND | | 37 | ND | | 35 | ND | | 51 | ND | | 35 | ND | | 38 |
| 4-Chlorophenyl-phenylether | 7005-72-3 | NS | ug/kg | ND | | 35 | ND | | 38 | ND | | 35 | ND | | 39 | ND | | 35 | ND | | 37 | ND | | 35 | ND | | 51 | ND | | 35 | ND | | 38 |
| Chrysene | 218-01-9 | 392000 | ug/kg | 19 | | 7.2 | ND | | 7.7 | ND | | 7.1 | 64 | | 8 | 1.6 | J | 7.2 | 3.1 | J | 7.4 | 23 | | 7.1 | 77 | | 10 | 21 | | 7.1 | 7.6 | J | 7.7 |
| 2-Methylphenol | 95-48-7 | 51100000 | ug/kg | ND | | 35 | ND | | 38 | ND | | 35 | ND | | 39 | ND | | 35 | ND | | 37 | ND | | 35 | ND | | 51 | ND | | 35 | ND | | 38 |
| 4-Methylphenol | 106-44-5 | 5100000 | ug/kg | ND | | 35 | ND | | 38 | ND | | 35 | ND | | 39 | ND | | 35 | ND | | 37 | ND | | 35 | ND | | 51 | ND | | 35 | ND | | 38 |
| Dibenzo(a,h)anthracene | 53-70-3 | 392 | ug/kg | ND | | 7.2 | ND | | 7.7 | ND | | 7.1 | 8.9 | | 8 | ND | | 7.2 | ND | | 7.4 | 3.6 | J | 7.1 | 13 | | 10 | 3.7 | J | 7.1 | ND | | 7.7 |
| Dibenzofuran | 132-64-9 | NS | ug/kg | ND | | 35 | ND | | 38 | ND | | 35 | 2.3 | J | 39 | ND | | 35 | ND | | 37 | ND | | 35 | 8.2 | J | 51 | 2.8 | J | 35 | ND | | 38 |
| 3,3'-Dichlorobenzidine | 91-94-1 | 6359 | ug/kg | ND | | 35 | ND | | 38 | ND | | 35 | ND | | 39 | ND | | 35 | ND | | 37 | ND | | 35 | ND | | 51 | ND | | 35 | ND | | 38 |
| 2,4-Dichlorophenol | 120-83-2 | 3100000 | ug/kg | ND | | 7.2 | ND | | 7.7 | ND | | 7.1 | ND | | 8 | ND | | 7.2 | ND | | 7.4 | ND | | 7.1 | ND | | 10 | ND | | 7.1 | ND | | 7.7 |
| Diethylphthalate | 84-66-2 | 817600000 | ug/kg | ND | | 35 | ND | | 38 | ND | | 35 | ND | | 39 | ND | | 35 | ND | | 37 | ND | | 35 | ND | | 51 | ND | | 35 | ND | | 38 |
| 2,4-Dimethylphenol | 105-67-9 | 20000000 | ug/kg | ND | | 35 | ND | | 38 | ND | | 35 | ND | | 39 | ND | | 35 | ND | | 37 | ND | | 35 | ND | | 51 | ND | | 35 | ND | | 38 |
| Dimethylphthalate | 131-11-3 | NS | ug/kg | ND | | 35 | ND | | 38 | ND | | 35 | ND | | 39 | ND | | 35 | ND | | 37 | ND | | 35 | ND | | 51 | ND | | 35 | ND | | 38 |
| Di-n-butylphthalate | 84-74-2 | 102200000 | ug/kg | ND | | 35 | ND | | 38 | ND | | 35 | ND | | 39 | ND | | 35 | ND | | 37 | ND | | 35 | ND | | 51 | ND | | 35 | ND | | 38 |
| 4,6-Dinitro-2-methylphenol | 534-52-1 | NS | ug/kg | ND | | 180 | ND | | 200 | ND | | 180 | ND | | 200 | ND | | 180 | ND | | 190 | ND | | 180 | ND | | 260 | ND | | 180 | ND | | 200 |
| 2,4-Dinitrophenol | 51-28-5 | 2044000 | ug/kg | ND | | 180 | ND | | 200 | ND | | 180 | ND | | 200 | ND | | 180 | ND | | 190 | ND | | 180 | ND | | 260 | ND | | 180 | ND | | 200 |
| 2,4-Dinitrotoluene | 121-14-2 | 2000000 | ug/kg | ND | | 35 | ND | | 38 | ND | | 35 | ND | | 39 | ND | | 35 | ND | | 37 | ND | | 35 | ND | | 51 | ND | | 35 | ND | | 38 |
| 2,6-Dinitrotoluene | 606-20-2 | 1022000 | ug/kg | ND | | 35 | ND | | 38 | ND | | 35 | ND | | 39 | ND | | 35 | ND | | 37 | ND | | 35 | ND | | 51 | ND | | 35 | ND | | 38 |
| Fluoranthene | 206-44-0 | 40880000 | ug/kg | 26 | | 7.2 | ND | | 7.7 | ND | | 7.1 | 98 | | 8 | 2.8 | J | 7.2 | 5.3 | J | 7.4 | 44 | | 7.1 | 120 | | 10 | 31 | | 7.1 | 14 | | 7.7 |
| Fluorene | 86-73-7 | 40880000 | ug/kg | ND | | 7.2 | ND | | 7.7 | ND | | 7.1 | 6.9 | J | 8 | ND | | 7.2 | ND | | 7.4 | ND | | 7.1 | 12 | | 10 | 3.2 | J | 7.1 | ND | | 7.7 |
| Hexachlorobenzene | 118-74-1 | 1800 | ug/kg | ND | | 7.2 | ND | | 7.7 | ND | | 7.1 | ND | | 8 | ND | | 7.2 | ND | | 7.4 | ND | | 7.1 | ND | | 10 | ND | | 7.1 | ND | | 7.7 |
| Hexachlorobutadiene | 87-68-3 | 36687 | ug/kg | ND | | 7.2 | ND | | 7.7 | ND | | 7.1 | ND | | 8 | ND | | 7.2 | ND | | 7.4 | ND | | 7.1 | ND | | 10 | ND | | 7.1 | ND | | 7.7 |
| Hexachlorocyclopentadiene | 77-47-4 | 6132000 | ug/kg | ND | | 35 | ND | | 38 | ND | | 35 | ND | | 39 | ND | | 35 | ND | | 37 | ND | | 35 | ND | | 51 | ND | | 35 | ND | | 38 |
| Hexachloroethane | 67-72-1 | 204400 | ug/kg | ND | | 35 | ND | | 38 | ND | | 35 | ND | | 39 | ND | | 35 | ND | | 37 | ND | | 35 | ND | | 51 | ND | | 35 | ND | | 38 |
| Indeno(1,2,3-cd)pyrene | 193-39-5 | 3900 | ug/kg | 10 | | 7.2 | ND | | 7.7 | ND | | 7.1 | 34 | | 8 | ND | | 7.2 | ND | | 7.4 | 15 | | 7.1 | 41 | | 10 | 13 | | 7.1 | 4.6 | J | 7.7 |
| Isophorone | 78-59-1 | 3012210.526 | ug/kg | ND | | 35 | ND | | 38 | ND | | 35 | ND | | 39 | ND | | 35 | ND | | 37 | ND | | 35 | ND | | 51 | ND | | 35 | ND | | 38 |
| 2-Methylnaphthalene | 91-57-6 | 4088000 | ug/kg | ND | | 7.2 | ND | | 7.7 | ND | | 7.1 | 3.4 | J | 8 | ND | | 7.2 | ND | | 7.4 | ND | | 7.1 | 16 | | 10 | 3.9 | J | 7.1 | ND | | 7.7 |
| Naphthalene | 91-20-3 | 20440000 | ug/kg | 2.3 | J | 7.2 | ND | | 7.7 | ND | | 7.1 | 3.9 | J | 8 | 1.7 | J | 7.2 | 1.9 | J | 7.4 | ND | | 7.1 | 30 | | 10 | 7.3 | | 7.1 | ND | | 7.7 |
| 2-Nitroaniline | 88-74-4 | NS | ug/kg | ND | | 180 | ND | | 200 | ND | | 180 | ND | | 200 | ND | | 180 | ND | | 190 | ND | | 180 | ND | | 260 | ND | | 180 | ND | | 200 |
| 3-Nitroaniline | 99-09-2 | NS | ug/kg | ND | | 180 | ND | | 200 | ND | | 180 | ND | | 200 | ND | | 180 | ND | | 190 | ND | | 180 | ND | | 260 | ND | | 180 | ND | | 200 |
| 4-Nitroaniline | 100-01-6 | NS | ug/kg | ND | | 180 | ND | | 200 | ND | | 180 | ND | | 200 | ND | | 180 | ND | | 190 | ND | | 180 | ND | | 260 | ND | | 180 | ND | | 200 |
| Nitrobenzene | 98-95-3 | 511000 | ug/kg | ND | | 7.2 | ND | | 7.7 | ND | | 7.1 | ND | | 8 | ND | | 7.2 | ND | | 7.4 | ND | | 7.1 | ND | | 10 | ND | | 7.1 | ND | | 7.7 |
| 2-Nitrophenol | 88-75-5 | NS | ug/kg | ND | | 35 | ND | | 38 | ND | | 35 | ND | | 39 | ND | | 35 | ND | | 37 | ND | | 35 | ND | | 51 | ND | | 35 | ND | | 38 |
| 4-Nitrophenol | 100-02-7 | NS | ug/kg | ND | | 180 | ND | | 200 | ND | | 180 | ND | | 200 | ND | | 180 | ND | | 190 | ND | | 180 | ND | | 260 | ND | | 180 | ND | | 200 |
| N-Nitrosodi-n-propylamine | 621-64-7 | 400 | ug/kg | ND | | 7.2 | ND | | 7.7 | ND | | 7.1 | ND | | 8 | ND | | 7.2 | ND | | 7.4 | ND | | 7.1 | ND | | 10 | ND | | 7.1 | ND | | 7.7 |
| N-Nitrosodiphenylamine | 86-30-6 | 584000 | ug/kg | ND | | 7.2 | ND | | 7.7 | ND | | 7.1 | ND | | 8 | ND | | 7.2 | ND | | 7.4 | ND | | 7.1 | ND | | 10 | ND | | 7.1 | ND | | 7.7 |
| Di-n-octylphthalate | 117-84-0 | NS | ug/kg | ND | | 35 | ND | | 38 | ND | | 35 | ND | | 39 | ND | | 35 | ND | | 37 | ND | | 35 | ND | | 51 | ND | | 35 | ND | | 38 |
| Pentachlorophenol | 87-86-5 | 23847 | ug/kg | ND | | 35 | ND | | 38 | ND | | 35 | ND | | 39 | ND | | 35 | ND | | 37 | ND | | 35 | ND | | 51 | ND | | 35 | ND | | 38 |
| Phenanthrene | 85-01-8 | NS | ug/kg | 16 | | 7.2 | 3.9 | J | 7.7 | 2.5 | J | 7.1 | 70 | | 8 | 3.5 | J | 7.2 | 5.3 | J | 7.4 | 19 | | 7.1 | 81 | | 10 | 22 | | 7.1 | 9.1 | | 7.7 |
| Phenol | 108-95-2 | 310000000 | ug/kg | ND | | 7.2 | ND | | 7.7 | ND | | 7.1 | ND | | 8 | ND | | 7.2 | ND | | 7.4 | ND | | 7.1 | ND | | 10 | ND | | 7.1 | ND | | 7.7 |
| Pyrene | 129-00-0 | 31000000 | ug/kg | 30 | | 7.2 | ND | | 7.7 | ND | | 7.1 | 110 | | 8 | 2.6 | J | 7.2 | 4.9 | J | 7.4 | 36 | | 7.1 | 100 | | 10 | 28 | | 7.1 | 12 | | 7.7 |
| 2,4,5-Trichlorophenol | 95-95-4 | 102200000 | ug/kg | ND | | 35 | ND | | 38 | ND | | 35 | ND | | 39 | ND | | 35 | ND | | 37 | ND | | 35 | ND | | 51 | ND | | 35 | ND | | 38 |
| 2,4,6-Trichlorophenol | 88-06-2 | 260145 | ug/kg | ND | | 35 | ND | | 38 | ND | | 35 | ND | | 39 | ND | | 35 | ND | | 37 | ND | | 35 | ND | | 51 | ND | | 35 | ND | | 38 |

# Table 4
## Summary of Soil Analytical Results
## Comparison to USEPA Region III RBCs
## U. S. Steel - Proposed Samax 14.2-Acre Parcel
## Fairless Hills, Pennsylvania

| | CAS No. | EPA Region III Industrial Soil RBC | Location ID | STP-5 | | | STP-5 | | | STP-6 | | | STP-6 | | | STP-7 | | | STP-7 | | | STP-8 | | | STP-8 | | | STP-9 | | | STP-9 | | |
|---|---|---|---|---|---|---|---|---|---|---|---|---|---|---|---|---|---|---|---|---|---|---|---|---|---|---|---|---|---|---|---|---|---|
| | | | Sample ID | 017-STP-5_1.5-2.0 | | | 018-STP-5_10.5-11 | | | 019-STP-6_1.5-2.0 | | | 020-STP-6_7.5-8 | | | 021-STP-7_1.5-2.0 | | | 022-STP-7_3.5-4.0 | | | 023-STP-8_1.5-2.0 | | | 024-STP-8_4.5-5.0 | | | 025-STP-9_1.5-2.0 | | | 026-STP-9_5.5-6.0 | | |
| | | | Sample Date | 10/31/07 | | | 10/31/07 | | | 10/31/07 | | | 10/31/07 | | | 10/31/07 | | | 10/31/07 | | | 10/31/07 | | | 10/31/07 | | | 10/31/07 | | | 08/31/07 | | |
| | | | Depth to GW | 11.00 | | | 11.00 | | | 8.00 | | | 8.00 | | | 4.00 | | | 4.00 | | | 5.00 | | | 5.00 | | | 6.00 | | | 6.00 | | |
| | | | Start Depth (ft) | 1.50 | | | 10.50 | | | 1.50 | | | 7.50 | | | 1.50 | | | 3.50 | | | 1.50 | | | 4.50 | | | 1.50 | | | 7.50 | | |
| | | | End Depth (ft) | 2.00 | | | 11.00 | | | 2.00 | | | 8.00 | | | 2.00 | | | 4.00 | | | 2.00 | | | 5.00 | | | 2.00 | | | 8.00 | | |
| **PCB (ug/kg)** | | | **Units** | **Result** | **Q** | **RL** | **Result** | **Q** | **RL** | **Result** | **Q** | **RL** | **Result** | **Q** | **RL** | **Result** | **Q** | **RL** | **Result** | **Q** | **RL** | **Result** | **Q** | **RL** | **Result** | **Q** | **RL** | **Result** | **Q** | **RL** | **Result** | **Q** | **RL** |
| Aroclor 1016 | 12674-11-2 | 40880 | ug/kg | ND | | 35 | ND | | 38 | ND | | 35 | ND | | 39 | ND | | 35 | ND | | 37 | ND | | 35 | ND | | 50 | ND | | 35 | ND | | 38 |
| Aroclor 1221 | 11104-28-2 | 1430.8 | ug/kg | ND | | 35 | ND | | 38 | ND | | 35 | ND | | 39 | ND | | 35 | ND | | 37 | ND | | 35 | ND | | 50 | ND | | 35 | ND | | 38 |
| Aroclor 1232 | 11141-16-5 | 1430.8 | ug/kg | ND | | 35 | ND | | 38 | ND | | 35 | ND | | 39 | ND | | 35 | ND | | 37 | ND | | 35 | ND | | 50 | ND | | 35 | ND | | 38 |
| Aroclor 1242 | 53469-21-9 | 1430.8 | ug/kg | ND | | 35 | ND | | 38 | ND | | 35 | ND | | 39 | ND | | 35 | ND | | 37 | ND | | 35 | ND | | 50 | ND | | 35 | ND | | 38 |
| Aroclor 1248 | 12672-29-6 | 1430.8 | ug/kg | ND | | 35 | ND | | 38 | ND | | 35 | ND | | 39 | ND | | 35 | ND | | 37 | ND | | 35 | ND | | 50 | ND | | 35 | ND | | 38 |
| Aroclor 1254 | 11097-69-1 | 1430.8 | ug/kg | ND | | 35 | ND | | 38 | ND | | 35 | ND | | 39 | ND | | 35 | ND | | 37 | ND | | 35 | ND | | 50 | ND | | 35 | ND | | 38 |
| Aroclor 1260 | 11096-82-5 | 1430.8 | ug/kg | ND | | 35 | ND | | 38 | ND | | 35 | ND | | 39 | ND | | 35 | ND | | 37 | ND | | 35 | ND | | 50 | ND | | 35 | ND | | 38 |
| **PP Metals (mg/kg)** | | | **Units** | **Result** | **Q** | **RL** | **Result** | **Q** | **RL** | **Result** | **Q** | **RL** | **Result** | **Q** | **RL** | **Result** | **Q** | **RL** | **Result** | **Q** | **RL** | **Result** | **Q** | **RL** | **Result** | **Q** | **RL** | **Result** | **Q** | **RL** | **Result** | **Q** | **RL** |
| Antimony | 7440-36-0 | 408.8 | mg/kg | 0.064 | B | 0.21 | 0.013 | B | 0.23 | 0.023 | B | 0.21 | 0.01 | B | 0.24 | 0.0067 | B | 0.21 | 0.011 | B | 0.22 | 0.022 | B | 0.21 | 0.49 | | 0.31 | 0.028 | B | 0.21 | 0.021 | B | 0.23 |
| Arsenic | 7440-38-2 | 1.91 | mg/kg | **3.6** | J | 0.11 | **4.6** | J | 0.12 | **2.9** | J | 0.11 | **4.3** | J | 0.12 | **2.8** | J | 0.11 | **2.9** | J | 0.11 | **2.9** | J | 0.11 | **5.2** | J | 0.15 | **2.9** | J | 0.11 | **4.6** | J | 0.12 |
| Beryllium | 7440-41-7 | 2044 | mg/kg | 0.43 | | 0.11 | 0.44 | | 0.12 | 0.26 | | 0.11 | 0.55 | | 0.12 | 0.32 | | 0.11 | 0.33 | | 0.11 | 0.34 | | 0.11 | 1.8 | | 0.15 | 0.36 | | 0.11 | 0.51 | | 0.12 |
| Cadmium | 7440-43-9 | 511 | mg/kg | 0.15 | | 0.11 | 0.095 | B | 0.12 | 0.083 | B | 0.11 | 0.079 | B | 0.12 | 0.088 | B | 0.11 | 0.089 | B | 0.11 | 0.11 | | 0.11 | 7.3 | | 0.15 | 0.1 | B | 0.11 | 0.097 | B | 0.12 |
| Chromium | 7440-47-3 | NS | mg/kg | 12.2 | J | 0.21 | 11.4 | J | 0.23 | 7.9 | J | 0.21 | 10.1 | J | 0.24 | 7.9 | J | 0.21 | 8.4 | J | 0.22 | 9 | J | 0.21 | 64.6 | J | 0.31 | 8.3 | J | 0.21 | 11.1 | J | 0.23 |
| Copper | 7440-50-8 | 40880 | mg/kg | 14.5 | | 0.21 | 9.9 | | 0.23 | 8.4 | | 0.21 | 11.8 | | 0.24 | 9.6 | | 0.21 | 9.2 | | 0.22 | 10.1 | | 0.21 | 122 | | 0.31 | 11.1 | | 0.21 | 12.4 | | 0.23 |
| Lead | 7439-92-1 | NS | mg/kg | 7.8 | | 0.11 | 8.6 | | 0.12 | 5.1 | | 0.11 | 10.8 | | 0.12 | 5.3 | | 0.11 | 7.9 | | 0.11 | 8.7 | | 0.11 | 176 | | 0.15 | 6.9 | | 0.11 | 11.4 | | 0.12 |
| Mercury | 7439-97-6 | NS | mg/kg | 0.029 | B | 0.035 | 0.024 | B | 0.038 | 0.011 | B | 0.035 | 0.028 | B | 0.039 | 0.013 | B | 0.035 | 0.013 | B | 0.037 | 0.023 | B | 0.035 | 0.73 | | 0.051 | 0.021 | B | 0.035 | 0.032 | B | 0.038 |
| Nickel | 7440-02-0 | 20440 | mg/kg | 10.7 | J | 0.11 | 12.4 | J | 0.12 | 9.3 | J | 0.11 | 12.8 | J | 0.12 | 10.6 | J | 0.11 | 9.7 | J | 0.11 | 10.5 | J | 0.11 | 40.6 | J | 0.15 | 10.1 | J | 0.11 | 13.7 | J | 0.12 |
| Selenium | 7782-49-2 | 5110 | mg/kg | 0.43 | B | 0.54 | 0.5 | B | 0.58 | 0.28 | B | 0.53 | 0.79 | | 0.59 | 0.33 | B | 0.53 | 0.39 | B | 0.55 | 0.43 | B | 0.54 | 2 | | 0.77 | 0.34 | B | 0.53 | 0.55 | B | 0.58 |
| Silver | 7440-22-4 | 5110 | mg/kg | 0.032 | B | 0.11 | ND | | 0.12 | ND | | 0.11 | 0.0034 | B | 0.12 | ND | | 0.11 | ND | | 0.11 | ND | | 0.11 | 1.2 | | 0.15 | ND | | 0.11 | ND | | 0.12 |
| Thallium | 7440-28-0 | 71.54 | mg/kg | 0.052 | B | 0.11 | 0.07 | B | 0.12 | 0.029 | B | 0.11 | 0.086 | B | 0.12 | 0.044 | B | 0.11 | 0.046 | B | 0.11 | 0.054 | B | 0.11 | 0.24 | | 0.15 | 0.05 | B | 0.11 | 0.082 | B | 0.12 |
| Zinc | 7440-66-6 | 306600 | mg/kg | 34 | J | 0.54 | 30.2 | J | 0.58 | 23.4 | J | 0.53 | 31.2 | J | 0.59 | 24.8 | J | 0.53 | 24.1 | J | 0.55 | 29.2 | J | 0.54 | 1270 | J | 0.77 | 28.3 | J | 0.53 | 34.4 | J | 0.58 |
| **General Chemistry** | | | **Units** | **Result** | **Q** | **RL** | **Result** | **Q** | **RL** | **Result** | **Q** | **RL** | **Result** | **Q** | **RL** | **Result** | **Q** | **RL** | **Result** | **Q** | **RL** | **Result** | **Q** | **RL** | **Result** | **Q** | **RL** | **Result** | **Q** | **RL** | **Result** | **Q** | **RL** |
| Percent Solids | none | NS | percent | 93.5 | | | 86.7 | | | 94.7 | | | 84.2 | | | 93.5 | | 1 | 90.2 | | | 93.3 | | | 65 | | | 94.9 | | | 86.8 | | |

# Table 4
## Summary of Soil Analytical Results
## Comparison to USEPA Region III RBCs
## U. S. Steel - Proposed Samax 14.2-Acre Parcel
## Fairless Hills, Pennsylvania

| | CAS No. | EPA Region III Industrial Soil RBC | Location ID | STP-10 | | | STP-10 | | | STP-10 | | | STP-11 | | | STP-11 | | | STP-12 | | | STP-12 | | | STP-13 | | | STP-13 | | |
|---|---|---|---|---|---|---|---|---|---|---|---|---|---|---|---|---|---|---|---|---|---|---|---|---|---|---|---|---|---|---|
| | | | Sample ID | 028-STP-10_1.5-2.0' | | | 029-DUP-2_110107 | | | 030-STP-10_12.5-13' | | | 032-STP-11_1.5-2.0' | | | 033-STP-11_7.5-8.0' | | | 034-STP-12_1.5-2.0' | | | 035-STP-12_7.5-8.0' | | | 003-STP-13_1.5-2.0 | | | 004-STP-13_9.5-10 | | |
| | | | Sample Date | 11/01/07 | | | 11/01/07 | | | 11/01/07 | | | 11/01/07 | | | 11/01/07 | | | 11/01/07 | | | 11/01/07 | | | 10/30/07 | | | 10/30/07 | | |
| | | | Depth to GW | 13.00 | | | 13.00 | | | 13.00 | | | 14.50 | | | 14.50 | | | 8.00 | | | 8.00 | | | 10.00 | | | 10.00 | | |
| | | | Start Depth (ft) | 1.50 | | | 1.50 | | | 12.50 | | | 1.50 | | | 7.50 | | | 1.50 | | | 7.50 | | | 1.50 | | | 9.50 | | |
| | | | End Depth (ft) | 2.00 | | | 2.00 | | | 13.00 | | | 2.00 | | | 8.00 | | | 2.00 | | | 8.00 | | | 2.00 | | | 10.00 | | |
| **TCL Volatiles** | | | Units | Result | Q | RL | Result | Q | RL | Result | Q | RL | Result | Q | RL | Result | Q | RL | Result | Q | RL | Result | Q | RL | Result | Q | RL | Result | Q | RL |
| Acetone | 67-64-1 | 920000000 | ug/kg | ND | | 23 | ND | | 21 | 34 | | 23 | ND | | 22 | 21 | J | 24 | ND | | 22 | 3000 | J B | 5600 | ND | | 20 | ND | | 25 |
| Benzene | 71-43-2 | 52000 | ug/kg | ND | | 5.7 | ND | | 5.3 | ND | | 5.9 | ND | | 5.5 | ND | | 6 | ND | | 5.5 | ND | | 1400 | ND | | 5.1 | ND | | 6.2 |
| Bromodichloromethane | 75-27-4 | 46000 | ug/kg | ND | | 5.7 | ND | | 5.3 | ND | | 5.9 | ND | | 5.5 | ND | | 6 | ND | | 5.5 | ND | | 1400 | ND | | 5.1 | ND | | 6.2 |
| Bromoform | 75-25-2 | 360000 | ug/kg | ND | | 5.7 | ND | | 5.3 | ND | | 5.9 | ND | | 5.5 | ND | | 6 | ND | | 5.5 | ND | | 1400 | ND | | 5.1 | ND | | 6.2 |
| Bromomethane | 74-83-9 | 1400000 | ug/kg | ND | | 5.7 | ND | | 5.3 | ND | | 5.9 | ND | | 5.5 | ND | | 6 | ND | | 5.5 | ND | | 1400 | ND | | 5.1 | ND | | 6.2 |
| 2-Butanone | 78-93-3 | 610000000 | ug/kg | ND | | 5.7 | ND | | 5.3 | 7.8 | | 5.9 | ND | | 5.5 | 4.4 | J | 6 | ND | | 5.5 | ND | | 1400 | ND | | 5.1 | ND | | 6.2 |
| Carbon Disulfide | 75-15-0 | 100000000 | ug/kg | ND | | 5.7 | ND | | 5.3 | ND | | 5.9 | ND | | 5.5 | ND | | 6 | ND | | 5.5 | ND | | 1400 | ND | | 5.1 | ND | | 6.2 |
| Carbon Tetrachloride | 56-23-5 | 22000 | ug/kg | ND | | 5.7 | ND | | 5.3 | ND | | 5.9 | ND | | 5.5 | ND | | 6 | ND | | 5.5 | ND | | 1400 | ND | | 5.1 | ND | | 6.2 |
| Chlorobenzene | 108-90-7 | 20000000 | ug/kg | ND | | 5.7 | ND | | 5.3 | ND | | 5.9 | ND | | 5.5 | ND | | 6 | ND | | 5.5 | ND | | 1400 | ND | | 5.1 | ND | | 6.2 |
| Chloroethane | 75-00-3 | 990000 | ug/kg | ND | | 5.7 | ND | | 5.3 | ND | | 5.9 | ND | | 5.5 | ND | | 6 | ND | | 5.5 | ND | | 1400 | ND | | 5.1 | ND | | 6.2 |
| Chloroform | 67-66-3 | 10000000 | ug/kg | ND | | 5.7 | ND | | 5.3 | ND | | 5.9 | ND | | 5.5 | ND | | 6 | ND | | 5.5 | ND | | 1400 | ND | | 5.1 | ND | | 6.2 |
| Chloromethane | 74-87-3 | NS | ug/kg | ND | | 5.7 | ND | | 5.3 | ND | | 5.9 | ND | | 5.5 | ND | | 6 | ND | | 5.5 | ND | | 1400 | ND | | 5.1 | ND | | 6.2 |
| Isopropylbenzene | 98-82-8 | 100000000 | ug/kg | ND | | 5.7 | ND | | 5.3 | ND | | 5.9 | ND | | 5.5 | 1.3 | J | 6 | ND | | 5.5 | 21000 | | 1400 | ND | | 5.1 | ND | | 6.2 |
| Cyclohexane | 110-82-7 | NS | ug/kg | ND | | 5.7 | ND | | 5.3 | ND | | 5.9 | ND | | 5.5 | ND | | 6 | ND | | 5.5 | ND | | 1400 | ND | | 5.1 | ND | | 6.2 |
| 1,2-Dibromoethane | 106-93-4 | 1400 | ug/kg | ND | | 5.7 | ND | | 5.3 | ND | | 5.9 | ND | | 5.5 | ND | | 6 | ND | | 5.5 | ND | | 1400 | ND | | 5.1 | ND | | 6.2 |
| 1,2-Dibromo-3-chloropropane | 96-12-8 | 2000 | ug/kg | ND | | 5.7 | ND | | 5.3 | ND | | 5.9 | ND | | 5.5 | ND | | 6 | ND | | 5.5 | ND | | 1400 | ND | | 5.1 | ND | | 6.2 |
| Dibromochloromethane | 124-48-1 | 34000 | ug/kg | ND | | 5.7 | ND | | 5.3 | ND | | 5.9 | ND | | 5.5 | ND | | 6 | ND | | 5.5 | ND | | 1400 | ND | | 5.1 | ND | | 6.2 |
| 1,4-Dichlorobenzene | 106-46-7 | 120000 | ug/kg | ND | | 5.7 | ND | | 5.3 | ND | | 5.9 | ND | | 5.5 | ND | | 6 | ND | | 5.5 | ND | | 1400 | ND | | 5.1 | ND | | 6.2 |
| 1,2-Dichlorobenzene | 95-50-1 | 92000000 | ug/kg | ND | | 5.7 | ND | | 5.3 | ND | | 5.9 | ND | | 5.5 | ND | | 6 | ND | | 5.5 | ND | | 1400 | ND | | 5.1 | ND | | 6.2 |
| 1,3-Dichlorobenzene | 541-73-1 | 3100000 | ug/kg | ND | | 5.7 | ND | | 5.3 | ND | | 5.9 | ND | | 5.5 | ND | | 6 | ND | | 5.5 | ND | | 1400 | ND | | 5.1 | ND | | 6.2 |
| Dichlorodifluoromethane | 75-71-8 | 200000000 | ug/kg | ND | | 5.7 | ND | | 5.3 | ND | | 5.9 | ND | | 5.5 | ND | | 6 | ND | | 5.5 | ND | | 1400 | ND | | 5.1 | ND | | 6.2 |
| 1,1-Dichloroethane | 75-34-3 | 200000000 | ug/kg | ND | | 5.7 | ND | | 5.3 | ND | | 5.9 | ND | | 5.5 | ND | | 6 | ND | | 5.5 | ND | | 1400 | ND | | 5.1 | ND | | 6.2 |
| 1,2-Dichloroethane | 107-06-2 | 31000 | ug/kg | ND | | 5.7 | ND | | 5.3 | ND | | 5.9 | ND | | 5.5 | ND | | 6 | ND | | 5.5 | ND | | 1400 | ND | | 5.1 | ND | | 6.2 |
| trans-1,2-Dichloroethene | 156-60-5 | 20000000 | ug/kg | ND | | 5.7 | ND | | 5.3 | ND | | 5.9 | ND | | 5.5 | ND | | 6 | ND | | 5.5 | ND | | 1400 | ND | | 5.1 | ND | | 6.2 |
| cis-1,2-Dichloroethene | 156-59-2 | 9200000 | ug/kg | ND | | 5.7 | ND | | 5.3 | ND | | 5.9 | ND | | 5.5 | ND | | 6 | ND | | 5.5 | ND | | 1400 | ND | | 5.1 | ND | | 6.2 |
| 1,1-Dichloroethene | 75-35-4 | 51000000 | ug/kg | ND | | 5.7 | ND | | 5.3 | ND | | 5.9 | ND | | 5.5 | ND | | 6 | ND | | 5.5 | ND | | 1400 | ND | | 5.1 | ND | | 6.2 |
| 1,2-Dichloropropane | 78-87-5 | 42000 | ug/kg | ND | | 5.7 | ND | | 5.3 | ND | | 5.9 | ND | | 5.5 | ND | | 6 | ND | | 5.5 | ND | | 1400 | ND | | 5.1 | ND | | 6.2 |
| trans-1,3-Dichloropropene | 10061-02-6 | 29000 | ug/kg | ND | | 5.7 | ND | | 5.3 | ND | | 5.9 | ND | | 5.5 | ND | | 6 | ND | | 5.5 | ND | | 1400 | ND | | 5.1 | ND | | 6.2 |
| cis-1,3-Dichloropropene | 10061-01-5 | 2900000 | ug/kg | ND | | 5.7 | ND | | 5.3 | ND | | 5.9 | ND | | 5.5 | ND | | 6 | ND | | 5.5 | ND | | 1400 | ND | | 5.1 | ND | | 6.2 |
| Ethylbenzene | 100-41-4 | 100000000 | ug/kg | ND | | 5.7 | ND | | 5.3 | ND | | 5.9 | ND | | 5.5 | ND | | 6 | ND | | 5.5 | 790 | J | 1400 | ND | | 5.1 | ND | | 6.2 |
| 2-Hexanone | 591-78-6 | NS | ug/kg | ND | | 5.7 | ND | | 5.3 | ND | | 5.9 | ND | | 5.5 | ND | | 6 | ND | | 5.5 | ND | | 1400 | ND | | 5.1 | ND | | 6.2 |
| Methyl Acetate | 79-20-9 | 1000000000 | ug/kg | ND | | 5.7 | ND | | 5.3 | ND | | 5.9 | ND | | 5.5 | ND | | 6 | ND | | 5.5 | ND | | 1400 | ND | | 5.1 | ND | | 6.2 |
| Methyl tert-Butyl Ether | 1634-04-4 | 720000 | ug/kg | ND | | 5.7 | ND | | 5.3 | ND | | 5.9 | ND | | 5.5 | ND | | 6 | ND | | 5.5 | ND | | 1400 | ND | | 5.1 | ND | | 6.2 |
| 4-Methyl-2-pentanone | 108-10-1 | NS | ug/kg | ND | | 5.7 | ND | | 5.3 | ND | | 5.9 | ND | | 5.5 | ND | | 6 | ND | | 5.5 | ND | | 1400 | ND | | 5.1 | ND | | 6.2 |
| Methylcyclohexane | 108-87-2 | NS | ug/kg | ND | | 5.7 | ND | | 5.3 | ND | | 5.9 | ND | | 5.5 | ND | | 6 | ND | | 5.5 | 430 | J | 1400 | ND | | 5.1 | ND | | 6.2 |
| Methylene Chloride | 75-09-2 | 380000 | ug/kg | 2.4 | J | 5.7 | ND | | 5.3 | ND | | 5.9 | ND | | 5.5 | ND | | 6 | 0.87 | J | 5.5 | ND | | 1400 | 2.5 | J B | 5.1 | 1.8 | J B | 6.2 |
| Styrene | 100-42-5 | 200000000 | ug/kg | ND | | 5.7 | ND | | 5.3 | ND | | 5.9 | ND | | 5.5 | ND | | 6 | ND | | 5.5 | ND | | 1400 | ND | | 5.1 | ND | | 6.2 |
| 1,1,2,2-Tetrachloroethane | 79-34-5 | 14000 | ug/kg | ND | | 5.7 | ND | | 5.3 | ND | | 5.9 | ND | | 5.5 | ND | | 6 | ND | | 5.5 | ND | | 1400 | ND | | 5.1 | ND | | 6.2 |
| Tetrachloroethene | 127-18-4 | 5300 | ug/kg | ND | | 5.7 | ND | | 5.3 | ND | | 5.9 | ND | | 5.5 | ND | | 6 | ND | | 5.5 | ND | | 1400 | ND | | 5.1 | ND | | 6.2 |
| Toluene | 108-88-3 | 82000000 | ug/kg | ND | | 5.7 | ND | | 5.3 | ND | | 5.9 | ND | | 5.5 | ND | | 6 | ND | | 5.5 | ND | | 1400 | ND | | 5.1 | ND | | 6.2 |
| Xylenes (Total) | 1330-20-7 | 200000000 | ug/kg | ND | | 17 | ND | | 16 | ND | | 18 | ND | | 17 | ND | | 18 | ND | | 16 | 3500 | J | 4200 | ND | | 15 | ND | | 19 |
| 1,1,2-Trichloro-1,2,2-trifluoroethane | 76-13-1 | 31000000000 | ug/kg | ND | | 5.7 | ND | | 5.3 | ND | | 5.9 | ND | | 5.5 | ND | | 6 | ND | | 5.5 | ND | | 1400 | ND | | 5.1 | ND | | 6.2 |
| 1,2,4-Trichlorobenzene | 120-82-1 | 10000000 | ug/kg | ND | | 5.7 | ND | | 5.3 | ND | | 5.9 | ND | | 5.5 | ND | | 6 | ND | | 5.5 | ND | | 1400 | ND | | 5.1 | ND | | 6.2 |
| 1,1,1-Trichloroethane | 71-55-6 | 290000000 | ug/kg | ND | | 5.7 | ND | | 5.3 | ND | | 5.9 | ND | | 5.5 | ND | | 6 | ND | | 5.5 | ND | | 1400 | ND | | 5.1 | ND | | 6.2 |
| 1,1,2-Trichloroethane | 79-00-5 | 50000 | ug/kg | ND | | 5.7 | ND | | 5.3 | ND | | 5.9 | ND | | 5.5 | ND | | 6 | ND | | 5.5 | ND | | 1400 | ND | | 5.1 | ND | | 6.2 |
| Trichloroethene | 79-01-6 | 7200 | ug/kg | ND | | 5.7 | ND | | 5.3 | ND | | 5.9 | ND | | 5.5 | ND | | 6 | ND | | 5.5 | ND | | 1400 | ND | | 5.1 | ND | | 6.2 |
| Trichlorofluoromethane | 75-69-4 | 310000000 | ug/kg | ND | | 5.7 | ND | | 5.3 | ND | | 5.9 | ND | | 5.5 | ND | | 6 | ND | | 5.5 | ND | | 1400 | ND | | 5.1 | ND | | 6.2 |
| Vinyl Chloride | 75-01-4 | 4000 | ug/kg | ND | | 5.7 | ND | | 5.3 | ND | | 5.9 | ND | | 5.5 | ND | | 6 | ND | | 5.5 | ND | | 1400 | ND | | 5.1 | ND | | 6.2 |

# Table 4
## Summary of Soil Analytical Results
## Comparison to USEPA Region III RBCs
## U. S. Steel - Proposed Samax 14.2-Acre Parcel
## Fairless Hills, Pennsylvania

| | CAS No. | EPA Region III Industrial Soil RBC | Location ID | STP-10 | | | STP-10 | | | STP-10 | | | STP-11 | | | STP-11 | | | STP-12 | | | STP-12 | | | STP-13 | | | STP-13 | | |
|---|---|---|---|---|---|---|---|---|---|---|---|---|---|---|---|---|---|---|---|---|---|---|---|---|---|---|---|---|---|---|
| | | | Sample ID | 028-STP-10_1.5-2.0' | | | 029-DUP-2_110107 | | | 030-STP-10_12.5-13' | | | 032-STP-11_1.5-2.0' | | | 033-STP-11_7.5-8.0' | | | 034-STP-12_1.5-2.0' | | | 035-STP-12_7.5-8.0' | | | 003-STP-13_1.5-2.0 | | | 004-STP-13_9.5-10 | | |
| | | | Sample Date | 11/01/07 | | | 11/01/07 | | | 11/01/07 | | | 11/01/07 | | | 11/01/07 | | | 11/01/07 | | | 11/01/07 | | | 10/30/07 | | | 10/30/07 | | |
| | | | Depth to GW | 13.00 | | | 13.00 | | | 13.00 | | | 14.50 | | | 14.50 | | | 8.00 | | | 8.00 | | | 10.00 | | | 10.00 | | |
| | | | Start Depth (ft) | 1.50 | | | 1.50 | | | 12.50 | | | 1.50 | | | 7.50 | | | 1.50 | | | 7.50 | | | 1.50 | | | 9.50 | | |
| | | | End Depth (ft) | 2.00 | | | 2.00 | | | 13.00 | | | 2.00 | | | 8.00 | | | 2.00 | | | 8.00 | | | 2.00 | | | 10.00 | | |
| **TCL Semivolatiles** | | | Units | Result | Q | RL | Result | Q | RL | Result | Q | RL | Result | Q | RL | Result | Q | RL | Result | Q | RL | Result | Q | RL | Result | Q | RL | Result | Q | RL |
| Acenaphthene | 83-32-9 | 61320000 | ug/kg | ND | | 7.4 | ND | | 7.4 | ND | | 7.7 | ND | | 15 | ND | | 8 | ND | | 7.4 | ND | | 1500 | 81 | | 74 | 55 | | 7.2 |
| Acenaphthylene | 208-96-8 | NS | ug/kg | 2.8 | J | 7.4 | 8.5 | | 7.4 | ND | | 7.7 | ND | | 15 | ND | | 8 | 2.3 | J | 7.4 | ND | | 1500 | 91 | | 74 | 7.1 | J | 7.2 |
| Acetaphenone | 98-86-2 | 102200000 | ug/kg | ND | | 36 | ND | | 37 | ND | | 38 | ND | | 72 | ND | | 40 | ND | | 36 | ND | | 7400 | ND | | 360 | ND | | 35 |
| Anthracene | 120-12-7 | 310000000 | ug/kg | ND | | 7.4 | 6.4 | J | 7.4 | ND | | 7.7 | ND | | 15 | ND | | 8 | ND | | 7.4 | ND | | 1500 | 280 | | 74 | 94 | | 7.2 |
| Atrazine | 1912-24-9 | 13000 | ug/kg | ND | | 36 | ND | | 37 | ND | | 38 | ND | | 72 | ND | | 40 | ND | | 36 | ND | | 7400 | ND | | 360 | ND | | 35 |
| Benzaldehyde | 100-52-7 | 100000000 | ug/kg | ND | | 36 | ND | | 37 | ND | | 38 | ND | | 72 | ND | | 40 | ND | | 36 | ND | | 7400 | ND | | 360 | ND | | 35 |
| Benzo(a)anthracene | 56-55-3 | 3920 | ug/kg | 5.9 | J | 7.4 | 19 | | 7.4 | ND | | 7.7 | 11 | J | 15 | ND | | 8 | 6.6 | J | 7.4 | ND | | 1500 | 1800 | | 74 | 350 | | 7.2 |
| Benzo(a)pyrene | 50-32-8 | 392 | ug/kg | 6.2 | J | 7.4 | 18 | | 7.4 | 3.1 | J | 7.7 | 19 | | 15 | ND | | 8 | 10 | | 7.4 | ND | | **1500** | **1900** | | 74 | 270 | | 7.2 |
| Benzo(b)fluoranthene | 205-99-2 | 3920 | ug/kg | 7.6 | | 7.4 | 28 | | 7.4 | ND | | 7.7 | 23 | | 15 | ND | | 8 | 11 | | 7.4 | ND | | 1500 | 2600 | | 74 | 370 | | 7.2 |
| Benzo(g,h,i)perylene | 191-24-2 | NS | ug/kg | 5.8 | J | 7.4 | 17 | | 7.4 | 2.7 | J | 7.7 | 16 | | 15 | ND | | 8 | 9.7 | | 7.4 | ND | | 1500 | 1400 | | 74 | 150 | | 7.2 |
| Benzo(k)fluoranthene | 207-08-9 | 39200 | ug/kg | 3.5 | J | 7.4 | 7.2 | J | 7.4 | ND | | 7.7 | 8.5 | J | 15 | ND | | 8 | 6.5 | J | 7.4 | ND | | 1500 | 1000 | | 74 | 140 | | 7.2 |
| 1,1'-Biphenyl | 92-52-4 | 51100000 | ug/kg | ND | | 36 | 13 | J | 37 | ND | | 38 | ND | | 72 | ND | | 40 | ND | | 36 | ND | | 7400 | ND | | 360 | 7.8 | J | 35 |
| bis(2-Chloroethoxyl methane | 111-91-1 | NS | ug/kg | ND | | 36 | ND | | 37 | ND | | 38 | ND | | 72 | ND | | 40 | ND | | 36 | ND | | 7400 | ND | | 360 | ND | | 35 |
| bis(2-Chloroethyl) ether | 111-44-4 | 2600 | ug/kg | ND | | 7.4 | ND | | 7.4 | ND | | 7.7 | ND | | 15 | ND | | 8 | ND | | 7.4 | ND | | 1500 | ND | | 74 | ND | | 7.2 |
| 2,2'-oxybis(1-Chloropropane) | 108-60-1 | 40900 | ug/kg | ND | | 7.4 | ND | | 7.4 | ND | | 7.7 | ND | | 15 | ND | | 8 | ND | | 7.4 | ND | | 1500 | ND | | 74 | ND | | 7.2 |
| bis-(2-Ethylhexyl)phthalate | 117-81-7 | 204400 | ug/kg | ND | | 36 | 8.3 | J | 37 | 11 | J | 38 | 33 | J | 72 | 9.8 | J | 40 | 7.9 | J | 36 | ND | | 7400 | ND | | 360 | 110 | | 35 |
| 4-Bromophenyl-phenylether | 101-55-3 | NS | ug/kg | ND | | 36 | ND | | 37 | ND | | 38 | ND | | 72 | ND | | 40 | ND | | 36 | ND | | 7400 | ND | | 360 | ND | | 35 |
| Butylbenzylphthalate | 85-68-7 | 200000000 | ug/kg | 3.3 | J | 36 | 6.1 | J | 37 | 11 | J | 38 | ND | | 72 | 9 | J | 40 | 7.1 | J | 36 | ND | | 7400 | ND | | 360 | 5.6 | J | 35 |
| Caprolactam | 105-60-2 | 510000000 | ug/kg | ND | | 36 | ND | | 37 | ND | | 38 | ND | | 72 | ND | | 40 | ND | | 36 | ND | | 7400 | ND | | 360 | ND | | 35 |
| Carbazole | 86-74-8 | 143080 | ug/kg | ND | | 7.4 | 3 | J | 7.4 | ND | | 7.7 | ND | | 15 | ND | | 8 | ND | | 7.4 | ND | | 1500 | 300 | | 74 | 68 | | 7.2 |
| 4-Chloro-3-methylphenol | 59-50-7 | NS | ug/kg | ND | | 36 | ND | | 37 | ND | | 38 | ND | | 72 | ND | | 40 | ND | | 36 | ND | | 7400 | ND | | 360 | ND | | 35 |
| 4-Chloroaniline | 106-47-8 | 4100000 | ug/kg | ND | | 36 | ND | | 37 | ND | | 38 | ND | | 72 | ND | | 40 | ND | | 36 | ND | | 7400 | ND | | 360 | ND | | 35 |
| 2-Chloronapthalene | 91-58-7 | 81760000 | ug/kg | ND | | 7.4 | ND | | 7.4 | ND | | 7.7 | ND | | 15 | ND | | 8 | ND | | 7.4 | ND | | 1500 | ND | | 74 | ND | | 7.2 |
| 2-Chlorophenol | 95-57-8 | 5110000 | ug/kg | ND | | 36 | ND | | 37 | ND | | 38 | ND | | 72 | ND | | 40 | ND | | 36 | ND | | 7400 | ND | | 360 | ND | | 35 |
| 4-Chlorophenyl-phenylether | 7005-72-3 | NS | ug/kg | ND | | 36 | ND | | 37 | ND | | 38 | ND | | 72 | ND | | 40 | ND | | 36 | ND | | 7400 | ND | | 360 | ND | | 35 |
| Chrysene | 218-01-9 | 392000 | ug/kg | 10 | | 7.4 | 35 | | 7.4 | ND | | 7.7 | 17 | | 15 | ND | | 8 | 12 | | 7.4 | ND | | 1500 | 2100 | | 74 | 400 | | 7.2 |
| 2-Methylphenol | 95-48-7 | 51100000 | ug/kg | ND | | 36 | ND | | 37 | ND | | 38 | ND | | 72 | ND | | 40 | ND | | 36 | ND | | 7400 | ND | | 360 | ND | | 35 |
| 4-Methylphenol | 106-44-5 | 5100000 | ug/kg | ND | | 36 | ND | | 37 | ND | | 38 | ND | | 72 | ND | | 40 | ND | | 36 | ND | | 7400 | ND | | 360 | ND | | 35 |
| Dibenzo(a,h)anthracene | 53-70-3 | 392 | ug/kg | ND | | 7.4 | ND | | 7.4 | ND | | 7.7 | ND | | 15 | ND | | 8 | ND | | 7.4 | ND | | **1500** | 330 | | 74 | 41 | | 7.2 |
| Dibenzofuran | 132-64-9 | NS | ug/kg | ND | | 36 | 19 | J | 37 | ND | | 38 | ND | | 72 | ND | | 40 | ND | | 36 | ND | | 7400 | 45 | J | 360 | 40 | | 35 |
| 3,3'-Dichlorobenzidine | 91-94-1 | 6359 | ug/kg | ND | | 36 | ND | | 37 | ND | | 38 | ND | | 72 | ND | | 40 | ND | | 36 | ND | | **7400** | ND | | 360 | ND | | 35 |
| 2,4-Dichlorophenol | 120-83-2 | 3100000 | ug/kg | ND | | 7.4 | ND | | 7.4 | ND | | 7.7 | ND | | 15 | ND | | 8 | ND | | 7.4 | ND | | 1500 | ND | | 74 | ND | | 7.2 |
| Diethylphthalate | 84-66-2 | 817600000 | ug/kg | ND | | 36 | ND | | 37 | ND | | 38 | ND | | 72 | ND | | 40 | ND | | 36 | ND | | 7400 | ND | | 360 | ND | | 35 |
| 2,4-Dimethylphenol | 105-67-9 | 20000000 | ug/kg | ND | | 36 | ND | | 37 | ND | | 38 | ND | | 72 | ND | | 40 | ND | | 36 | ND | | 7400 | ND | | 360 | ND | | 35 |
| Dimethylphthalate | 131-11-3 | NS | ug/kg | ND | | 36 | ND | | 37 | ND | | 38 | ND | | 72 | ND | | 40 | ND | | 36 | ND | | 7400 | ND | | 360 | ND | | 35 |
| Di-n-butylphthalate | 84-74-2 | 102200000 | ug/kg | ND | | 36 | 9.1 | J | 37 | 7.9 | J | 38 | ND | | 72 | 8.3 | J | 40 | 8.3 | J | 36 | ND | | 7400 | ND | | 360 | 18 | J | 35 |
| 4,6-Dinitro-2-methylphenol | 534-52-1 | NS | ug/kg | ND | | 190 | ND | | 190 | ND | | 200 | ND | | 370 | ND | | 200 | ND | | 190 | ND | | 38000 | ND | | 1900 | ND | | 180 |
| 2,4-Dinitrophenol | 51-28-5 | 2044000 | ug/kg | ND | | 190 | ND | | 190 | ND | | 200 | ND | | 370 | ND | | 200 | ND | | 190 | ND | | 38000 | ND | | 1900 | ND | | 180 |
| 2,4-Dinitrotoluene | 121-14-2 | 2000000 | ug/kg | ND | | 36 | ND | | 37 | ND | | 38 | ND | | 72 | ND | | 40 | ND | | 36 | ND | | 7400 | ND | | 360 | ND | | 35 |
| 2,6-Dinitrotoluene | 606-20-2 | 1022000 | ug/kg | ND | | 36 | ND | | 37 | ND | | 38 | ND | | 72 | ND | | 40 | ND | | 36 | ND | | 7400 | ND | | 360 | ND | | 35 |
| Fluoranthene | 206-44-0 | 40880000 | ug/kg | 6.9 | | 7.4 | 32 | | 7.4 | 4.6 | J | 7.7 | 26 | | 15 | 2.9 | J | 8 | 22 | | 7.4 | ND | | 1500 | 5100 | | 74 | 710 | | 7.2 |
| Fluorene | 86-73-7 | 40880000 | ug/kg | ND | | 7.4 | ND | | 7.4 | ND | | 7.7 | ND | | 15 | ND | | 8 | ND | | 7.4 | ND | | 1500 | 81 | | 74 | 75 | | 7.2 |
| Hexachlorobenzene | 118-74-1 | 1800 | ug/kg | ND | | 7.4 | ND | | 7.4 | ND | | 7.7 | ND | | 15 | ND | | 8 | ND | | 7.4 | ND | | 1500 | ND | | 74 | ND | | 7.2 |
| Hexachlorobutadiene | 87-68-3 | 36687 | ug/kg | ND | | 7.4 | ND | | 7.4 | ND | | 7.7 | ND | | 15 | ND | | 8 | ND | | 7.4 | ND | | 1500 | ND | | 74 | ND | | 7.2 |
| Hexachlorocyclopentadiene | 77-47-4 | 6132000 | ug/kg | ND | | 36 | ND | | 37 | ND | | 38 | ND | | 72 | ND | | 40 | ND | | 36 | ND | | 7400 | ND | | 360 | ND | | 35 |
| Hexachloroethane | 67-72-1 | 204400 | ug/kg | ND | | 36 | ND | | 37 | ND | | 38 | ND | | 72 | ND | | 40 | ND | | 36 | ND | | 7400 | ND | | 360 | ND | | 35 |
| Indeno(1,2,3-cd)pyrene | 193-39-5 | 3900 | ug/kg | 4.6 | J | 7.4 | 14 | | 7.4 | ND | | 7.7 | 11 | J | 15 | ND | | 8 | 4.8 | J | 7.4 | ND | | 1500 | 1300 | | 74 | 140 | | 7.2 |
| Isophorone | 78-59-1 | 3012210.526 | ug/kg | ND | | 36 | ND | | 37 | ND | | 38 | ND | | 72 | ND | | 40 | ND | | 36 | ND | | 7400 | 380 | | 360 | ND | | 35 |
| 2-Methylnaphthalene | 91-57-6 | 4088000 | ug/kg | 7.7 | | 7.4 | 64 | | 7.4 | ND | | 7.7 | ND | | 15 | 22 | | 8 | ND | | 7.4 | 30000 | | 1500 | ND | | 74 | 11 | | 7.2 |
| Naphthalene | 91-20-3 | 20440000 | ug/kg | 6 | J | 7.4 | 34 | | 7.4 | ND | | 7.7 | ND | | 15 | 230 | | 8 | 4.2 | J | 7.4 | 210000 | | 1500 | 24 | J | 74 | 24 | | 7.2 |
| 2-Nitroaniline | 88-74-4 | NS | ug/kg | ND | | 190 | ND | | 190 | ND | | 200 | ND | | 370 | ND | | 200 | ND | | 190 | ND | | 38000 | ND | | 1900 | ND | | 180 |
| 3-Nitroaniline | 99-09-2 | NS | ug/kg | ND | | 190 | ND | | 190 | ND | | 200 | ND | | 370 | ND | | 200 | ND | | 190 | ND | | 38000 | ND | | 1900 | ND | | 180 |
| 4-Nitroaniline | 100-01-6 | NS | ug/kg | ND | | 190 | ND | | 190 | ND | | 200 | ND | | 370 | ND | | 200 | ND | | 190 | ND | | 38000 | ND | | 1900 | ND | | 180 |
| Nitrobenzene | 98-95-3 | 511000 | ug/kg | ND | | 7.4 | ND | | 7.4 | ND | | 7.7 | ND | | 15 | ND | | 8 | ND | | 7.4 | ND | | 1500 | ND | | 74 | ND | | 7.2 |
| 2-Nitrophenol | 88-75-5 | NS | ug/kg | ND | | 36 | ND | | 37 | ND | | 38 | ND | | 72 | ND | | 40 | ND | | 36 | ND | | 7400 | ND | | 360 | ND | | 35 |
| 4-Nitrophenol | 100-02-7 | NS | ug/kg | ND | | 190 | ND | | 190 | ND | | 200 | ND | | 370 | ND | | 200 | ND | | 190 | ND | | 38000 | ND | | 1900 | ND | | 180 |
| N-Nitrosodi-n-propylamine | 621-64-7 | 400 | ug/kg | ND | | 7.4 | ND | | 7.4 | ND | | 7.7 | ND | | 15 | ND | | 8 | ND | | 7.4 | ND | | **1500** | ND | | 74 | ND | | 7.2 |
| N-Nitrosodiphenylamine | 86-30-6 | 584000 | ug/kg | ND | | 7.4 | ND | | 7.4 | ND | | 7.7 | ND | | 15 | ND | | 8 | ND | | 7.4 | ND | | 1500 | ND | | 74 | ND | | 7.2 |
| Di-n-octylphthalate | 117-84-0 | NS | ug/kg | ND | | 36 | ND | | 37 | ND | | 38 | ND | | 72 | ND | | 40 | ND | | 36 | ND | | 7400 | ND | | 360 | ND | | 35 |
| Pentachlorophenol | 87-86-5 | 23847 | ug/kg | ND | | 36 | ND | | 37 | ND | | 38 | ND | | 72 | ND | | 40 | ND | | 36 | ND | | 7400 | ND | | 360 | ND | | 35 |
| Phenanthrene | 85-01-8 | NS | ug/kg | 13 | | 7.4 | 67 | | 7.4 | 4.6 | J | 7.7 | 12 | J | 15 | ND | | 8 | 11 | | 7.4 | ND | | 1500 | 2100 | | 74 | 410 | | 7.2 |
| Phenol | 108-95-2 | 310000000 | ug/kg | ND | | 7.4 | ND | | 7.4 | ND | | 7.7 | ND | | 15 | ND | | 8 | ND | | 7.4 | ND | | 1500 | ND | | 74 | ND | | 7.2 |
| Pyrene | 129-00-0 | 31000000 | ug/kg | 11 | | 7.4 | 36 | | 7.4 | 4.5 | J | 7.7 | 21 | | 15 | 2.4 | J | 8 | 19 | | 7.4 | ND | | 1500 | 3600 | | 74 | 520 | | 7.2 |
| 2,4,5-Trichlorophenol | 95-95-4 | 102200000 | ug/kg | ND | | 36 | ND | | 37 | ND | | 38 | ND | | 72 | ND | | 40 | ND | | 36 | ND | | 7400 | ND | | 360 | ND | | 35 |
| 2,4,6-Trichlorophenol | 88-06-2 | 260145 | ug/kg | ND | | 36 | ND | | 37 | ND | | 38 | ND | | 72 | ND | | 40 | ND | | 36 | ND | | 7400 | ND | | 360 | ND | | 35 |

# Table 4
## Summary of Soil Analytical Results
## Comparison to USEPA Region III RBCs
## U. S. Steel - Proposed Samax 14.2-Acre Parcel
## Fairless Hills, Pennsylvania

| | CAS No. | EPA Region III Industrial Soil RBC | Location ID | STP-10 | | | STP-10 | | | STP-10 | | | STP-11 | | | STP-11 | | | STP-12 | | | STP-12 | | | STP-13 | | | STP-13 | | |
|---|---|---|---|---|---|---|---|---|---|---|---|---|---|---|---|---|---|---|---|---|---|---|---|---|---|---|---|---|---|---|
| | | | Sample ID | 028-STP-10_1.5-2.0' | | | 029-DUP-2_110107 | | | 030-STP-10_12.5-13' | | | 032-STP-11_1.5-2.0' | | | 033-STP-11_7.5-8.0' | | | 034-STP-12_1.5-2.0' | | | 035-STP-12_7.5-8.0' | | | 003-STP-13_1.5-2.0 | | | 004-STP-13_9.5-10 | | |
| | | | Sample Date | 11/01/07 | | | 11/01/07 | | | 11/01/07 | | | 11/01/07 | | | 11/01/07 | | | 11/01/07 | | | 11/01/07 | | | 10/30/07 | | | 10/30/07 | | |
| | | | Depth to GW | 13.00 | | | 13.00 | | | 13.00 | | | 14.50 | | | 14.50 | | | 8.00 | | | 8.00 | | | 10.00 | | | 10.00 | | |
| | | | Start Depth (ft) | 1.50 | | | 1.50 | | | 12.50 | | | 1.50 | | | 7.50 | | | 1.50 | | | 7.50 | | | 1.50 | | | 9.50 | | |
| | | | End Depth (ft) | 2.00 | | | 2.00 | | | 13.00 | | | 2.00 | | | 8.00 | | | 2.00 | | | 8.00 | | | 2.00 | | | 10.00 | | |
| **PCB (ug/kg)** | | | **Units** | **Result** | **Q** | **RL** | **Result** | **Q** | **RL** | **Result** | **Q** | **RL** | **Result** | **Q** | **RL** | **Result** | **Q** | **RL** | **Result** | **Q** | **RL** | **Result** | **Q** | **RL** | **Result** | **Q** | **RL** | **Result** | **Q** | **RL** |
| Aroclor 1016 | 12674-11-2 | 40880 | ug/kg | ND | | 36 | ND | | 37 | ND | | 38 | ND | | 36 | ND | | 40 | ND | | 36 | 110 | | 37 | ND | | 36 | ND | | 36 |
| Aroclor 1221 | 11104-28-2 | 1430.8 | ug/kg | ND | | 36 | ND | | 37 | ND | | 38 | ND | | 36 | ND | | 40 | ND | | 36 | ND | | 37 | ND | | 36 | ND | | 36 |
| Aroclor 1232 | 11141-16-5 | 1430.8 | ug/kg | ND | | 36 | ND | | 37 | ND | | 38 | ND | | 36 | ND | | 40 | ND | | 36 | ND | | 37 | ND | | 36 | ND | | 36 |
| Aroclor 1242 | 53469-21-9 | 1430.8 | ug/kg | ND | | 36 | ND | | 37 | ND | | 38 | ND | | 36 | ND | | 40 | ND | | 36 | ND | | 37 | ND | | 36 | ND | | 36 |
| Aroclor 1248 | 12672-29-6 | 1430.8 | ug/kg | ND | | 36 | ND | | 37 | ND | | 38 | ND | | 36 | ND | | 40 | ND | | 36 | ND | | 37 | ND | | 36 | ND | | 36 |
| Aroclor 1254 | 11097-69-1 | 1430.8 | ug/kg | ND | | 36 | ND | | 37 | ND | | 38 | 35 | J | 36 | ND | | 40 | ND | | 36 | 1100 | | 37 | 130 | | 36 | 35 | J | 36 |
| Aroclor 1260 | 11096-82-5 | 1430.8 | ug/kg | ND | | 36 | ND | | 37 | ND | | 38 | ND | | 36 | ND | | 40 | ND | | 36 | ND | | 37 | ND | | 36 | ND | | 36 |
| **PP Metals (mg/kg)** | | | **Units** | **Result** | **Q** | **RL** | **Result** | **Q** | **RL** | **Result** | **Q** | **RL** | **Result** | **Q** | **RL** | **Result** | **Q** | **RL** | **Result** | **Q** | **RL** | **Result** | **Q** | **RL** | **Result** | **Q** | **RL** | **Result** | **Q** | **RL** |
| Antimony | 7440-36-0 | 408.8 | mg/kg | 0.047 | B | 0.22 | 0.035 | B | 0.22 | 0.014 | B | 0.23 | 0.028 | B | 0.22 | 0.011 | B | 0.24 | 0.021 | B | 0.22 | 0.037 | B | 0.23 | 0.021 | B | 0.22 | 0.056 | B | 0.22 |
| Arsenic | 7440-38-2 | 1.91 | mg/kg | **3** | | 0.11 | **3.5** | | 0.11 | **6.4** | | 0.11 | **4.7** | | 0.11 | **4.3** | | 0.12 | **3.8** | | 0.11 | 1.7 | | 0.11 | **7** | | 0.11 | **5.6** | | 0.11 |
| Beryllium | 7440-41-7 | 2044 | mg/kg | 0.35 | | 0.11 | 0.43 | | 0.11 | 0.56 | | 0.11 | 0.34 | | 0.11 | 0.48 | | 0.12 | 0.38 | | 0.11 | 0.25 | | 0.11 | 0.48 | | 0.11 | 1.4 | | 0.11 |
| Cadmium | 7440-43-9 | 511 | mg/kg | 0.13 | | 0.11 | 0.29 | | 0.11 | 0.13 | | 0.11 | 0.14 | | 0.11 | 0.14 | | 0.12 | 0.12 | | 0.11 | 0.097 | B | 0.11 | 0.19 | | 0.11 | 0.13 | | 0.11 |
| Chromium | 7440-47-3 | NS | mg/kg | 24.9 | | 0.22 | 465 | | 0.22 | 10.9 | | 0.23 | 8.3 | | 0.22 | 10 | | 0.24 | 10.8 | | 0.22 | 12.6 | | 0.23 | 11.7 | J | 0.22 | 34.5 | J | 0.22 |
| Copper | 7440-50-8 | 40880 | mg/kg | 12.4 | J | 0.22 | 13.8 | J | 0.22 | 12.5 | J | 0.23 | 12.2 | J | 0.22 | 12.7 | J | 0.24 | 13 | J | 0.22 | 8.8 | J | 0.23 | 15.3 | J | 0.22 | 27.3 | J | 0.22 |
| Lead | 7439-92-1 | NS | mg/kg | 9.5 | | 0.11 | 15.9 | | 0.11 | 13.6 | | 0.11 | 9.4 | | 0.11 | 11.8 | | 0.12 | 9.6 | | 0.11 | 4.2 | | 0.11 | 15.2 | | 0.11 | 15.6 | | 0.11 |
| Mercury | 7439-97-6 | NS | mg/kg | 0.033 | B | 0.036 | 0.041 | | 0.037 | 0.23 | | 0.038 | 0.031 | B | 0.036 | 0.018 | B | 0.04 | 0.019 | B | 0.036 | 0.01 | B | 0.037 | 0.035 | B | 0.036 | 0.0083 | B | 0.036 |
| Nickel | 7440-02-0 | 20440 | mg/kg | 12.2 | | 0.11 | 10.2 | | 0.11 | 13.5 | | 0.11 | 11.3 | | 0.11 | 14.4 | | 0.12 | 13.6 | | 0.11 | 7.9 | | 0.11 | 12.2 | | 0.11 | 22.4 | | 0.11 |
| Selenium | 7782-49-2 | 5110 | mg/kg | 0.19 | B | 0.55 | 0.3 | B | 0.55 | 0.53 | B | 0.57 | 0.21 | B | 0.55 | 0.45 | B | 0.6 | 0.24 | B | 0.55 | 0.19 | B | 0.56 | 0.68 | J | 0.55 | 0.79 | J | 0.54 |
| Silver | 7440-22-4 | 5110 | mg/kg | 0.015 | B | 0.11 | 0.033 | B | 0.11 | 0.024 | B | 0.11 | 0.015 | B | 0.11 | 0.023 | B | 0.12 | 0.015 | B | 0.11 | 0.011 | B | 0.11 | 0.0073 | B | 0.11 | 0.029 | B | 0.11 |
| Thallium | 7440-28-0 | 71.54 | mg/kg | 0.052 | B | 0.11 | 0.061 | B | 0.11 | 0.11 | | 0.11 | 0.05 | B | 0.11 | 0.089 | B | 0.12 | 0.065 | B | 0.11 | 0.031 | B | 0.11 | 0.086 | B J | 0.11 | 0.47 | J | 0.11 |
| Zinc | 7440-66-6 | 306600 | mg/kg | 41.8 | J | 0.55 | 59.9 | J | 0.55 | 38 | J | 0.57 | 34.8 | J | 0.55 | 36.8 | J | 0.6 | 33.4 | J | 0.55 | 26.9 | J | 0.56 | 38.6 | J | 0.55 | 53.1 | J | 0.54 |
| **General Chemistry** | | | **Units** | **Result** | **Q** | **RL** | **Result** | **Q** | **RL** | **Result** | **Q** | **RL** | **Result** | **Q** | **RL** | **Result** | **Q** | **RL** | **Result** | **Q** | **RL** | **Result** | **Q** | **RL** | **Result** | **Q** | **RL** | **Result** | **Q** | **RL** |
| Percent Solids | none | NS | percent | 90.7 | | | 90.2 | | | 87 | | | 91.7 | | | 83.5 | | | 90.5 | - | - | 88.6 | - | - | 90.7 | | | 92.2 | | |

# Table 4
## Summary of Soil Analytical Results
## Comparison to USEPA Region III RBCs
## U. S. Steel - Proposed Samax 14.2-Acre Parcel
## Fairless Hills, Pennsylvania

| | CAS No. | EPA Region III Industrial Soil RBC | Location ID | STP-14 | | | STP-14 | | | STP-15 | | | STP-15 | | |
|---|---|---|---|---|---|---|---|---|---|---|---|---|---|---|---|
| | | | Sample ID | 012-STP-14_1.5-2.0 | | | 013-STP-14_11.5-12 | | | 036-STP-15_1.5-2.0' | | | 037-STP-15_8.5-9.0' | | |
| | | | Sample Date | 10/31/07 | | | 10/31/07 | | | 11/01/07 | | | 11/01/07 | | |
| | | | Depth to GW | 12.00 | | | 12.00 | | | 9.00 | | | 9.00 | | |
| | | | Start Depth (ft) | 1.50 | | | 11.50 | | | 1.50 | | | 8.50 | | |
| | | | End Depth (ft) | 2.00 | | | 12.00 | | | 2.00 | | | 9.00 | | |
| **TCL Volatiles** | | | Units | Result | Q | RL | Result | Q | RL | Result | Q | RL | Result | Q | RL |
| Acetone | 67-64-1 | 920000000 | ug/kg | ND | | 20 | 7.8 | J | 21 | ND | | 24 | ND | | 24 |
| Benzene | 71-43-2 | 52000 | ug/kg | ND | | 5 | ND | | 5.4 | ND | | 6 | ND | | 5.9 |
| Bromodichloromethane | 75-27-4 | 46000 | ug/kg | ND | | 5 | ND | | 5.4 | ND | | 6 | ND | | 5.9 |
| Bromoform | 75-25-2 | 360000 | ug/kg | ND | | 5 | ND | | 5.4 | ND | | 6 | ND | | 5.9 |
| Bromomethane | 74-83-9 | 1400000 | ug/kg | ND | | 5 | ND | | 5.4 | ND | | 6 | ND | | 5.9 |
| 2-Butanone | 78-93-3 | 610000000 | ug/kg | ND | | 5 | ND | | 5.4 | ND | | 6 | ND | | 5.9 |
| Carbon Disulfide | 75-15-0 | 100000000 | ug/kg | ND | | 5 | ND | | 5.4 | ND | | 6 | ND | | 5.9 |
| Carbon Tetrachloride | 56-23-5 | 22000 | ug/kg | ND | | 5 | ND | | 5.4 | ND | | 6 | ND | | 5.9 |
| Chlorobenzene | 108-90-7 | 20000000 | ug/kg | ND | | 5 | ND | | 5.4 | ND | | 6 | ND | | 5.9 |
| Chloroethane | 75-00-3 | 990000 | ug/kg | ND | | 5 | ND | | 5.4 | ND | | 6 | ND | | 5.9 |
| Chloroform | 67-66-3 | 10000000 | ug/kg | ND | | 5 | ND | | 5.4 | ND | | 6 | ND | | 5.9 |
| Chloromethane | 74-87-3 | NS | ug/kg | ND | | 5 | ND | | 5.4 | ND | | 6 | ND | | 5.9 |
| Isopropylbenzene | 98-82-8 | 100000000 | ug/kg | ND | | 5 | ND | | 5.4 | ND | | 6 | ND | | 5.9 |
| Cyclohexane | 110-82-7 | NS | ug/kg | ND | | 5 | ND | | 5.4 | ND | | 6 | ND | | 5.9 |
| 1,2-Dibromoethane | 106-93-4 | 1400 | ug/kg | ND | | 5 | ND | | 5.4 | ND | | 6 | ND | | 5.9 |
| 1,2-Dibromo-3-chloropropane | 96-12-8 | 2000 | ug/kg | ND | | 5 | ND | | 5.4 | ND | | 6 | ND | | 5.9 |
| Dibromochloromethane | 124-48-1 | 34000 | ug/kg | ND | | 5 | ND | | 5.4 | ND | | 6 | ND | | 5.9 |
| 1,4-Dichlorobenzene | 106-46-7 | 120000 | ug/kg | ND | | 5 | ND | | 5.4 | ND | | 6 | ND | | 5.9 |
| 1,2-Dichlorobenzene | 95-50-1 | 92000000 | ug/kg | ND | | 5 | ND | | 5.4 | ND | | 6 | ND | | 5.9 |
| 1,3-Dichlorobenzene | 541-73-1 | 3100000 | ug/kg | ND | | 5 | ND | | 5.4 | ND | | 6 | ND | | 5.9 |
| Dichlorodifluoromethane | 75-71-8 | 200000000 | ug/kg | ND | | 5 | ND | | 5.4 | ND | | 6 | ND | | 5.9 |
| 1,1-Dichloroethane | 75-34-3 | 200000000 | ug/kg | ND | | 5 | ND | | 5.4 | ND | | 6 | ND | | 5.9 |
| 1,2-Dichloroethane | 107-06-2 | 31000 | ug/kg | ND | | 5 | ND | | 5.4 | ND | | 6 | ND | | 5.9 |
| trans-1,2-Dichloroethene | 156-60-5 | 20000000 | ug/kg | ND | | 5 | ND | | 5.4 | ND | | 6 | ND | | 5.9 |
| cis-1,2-Dichloroethene | 156-59-2 | 9200000 | ug/kg | ND | | 5 | ND | | 5.4 | ND | | 6 | ND | | 5.9 |
| 1,1-Dichloroethene | 75-35-4 | 51000000 | ug/kg | ND | | 5 | ND | | 5.4 | ND | | 6 | ND | | 5.9 |
| 1,2-Dichloropropane | 78-87-5 | 42000 | ug/kg | ND | | 5 | ND | | 5.4 | ND | | 6 | ND | | 5.9 |
| trans-1,3-Dichloropropene | 10061-02-6 | 29000 | ug/kg | ND | | 5 | ND | | 5.4 | ND | | 6 | ND | | 5.9 |
| cis-1,3-Dichloropropene | 10061-01-5 | 2900000 | ug/kg | ND | | 5 | ND | | 5.4 | ND | | 6 | ND | | 5.9 |
| Ethylbenzene | 100-41-4 | 100000000 | ug/kg | ND | | 5 | ND | | 5.4 | ND | | 6 | ND | | 5.9 |
| 2-Hexanone | 591-78-6 | NS | ug/kg | ND | | 5 | ND | | 5.4 | ND | | 6 | ND | | 5.9 |
| Methyl Acetate | 79-20-9 | 1000000000 | ug/kg | ND | | 5 | ND | | 5.4 | ND | | 6 | ND | | 5.9 |
| Methyl tert-Butyl Ether | 1634-04-4 | 720000 | ug/kg | ND | | 5 | ND | | 5.4 | ND | | 6 | ND | | 5.9 |
| 4-Methyl-2-pentanone | 108-10-1 | NS | ug/kg | ND | | 5 | ND | | 5.4 | ND | | 6 | ND | | 5.9 |
| Methylcyclohexane | 108-87-2 | NS | ug/kg | ND | | 5 | ND | | 5.4 | ND | | 6 | ND | | 5.9 |
| Methylene Chloride | 75-09-2 | 380000 | ug/kg | 1.3 | J | 5 | 1 | J | 5.4 | ND | | 6 | ND | | 5.9 |
| Styrene | 100-42-5 | 200000000 | ug/kg | ND | | 5 | ND | | 5.4 | ND | | 6 | ND | | 5.9 |
| 1,1,2,2-Tetrachloroethane | 79-34-5 | 14000 | ug/kg | ND | | 5 | ND | | 5.4 | ND | | 6 | ND | | 5.9 |
| Tetrachloroethene | 127-18-4 | 5300 | ug/kg | ND | | 5 | ND | | 5.4 | ND | | 6 | ND | | 5.9 |
| Toluene | 108-88-3 | 82000000 | ug/kg | ND | | 5 | ND | | 5.4 | ND | | 6 | ND | | 5.9 |
| Xylenes (Total) | 1330-20-7 | 200000000 | ug/kg | ND | | 15 | ND | | 16 | ND | | 18 | ND | | 18 |
| 1,1,2-Trichloro-1,2,2-trifluoroethane | 76-13-1 | 31000000000 | ug/kg | ND | | 5 | ND | | 5.4 | ND | | 6 | ND | | 5.9 |
| 1,2,4-Trichlorobenzene | 120-82-1 | 10000000 | ug/kg | ND | | 5 | ND | | 5.4 | ND | | 6 | ND | | 5.9 |
| 1,1,1-Trichloroethane | 71-55-6 | 290000000 | ug/kg | ND | | 5 | ND | | 5.4 | ND | | 6 | ND | | 5.9 |
| 1,1,2-Trichloroethane | 79-00-5 | 50000 | ug/kg | ND | | 5 | ND | | 5.4 | ND | | 6 | ND | | 5.9 |
| Trichloroethene | 79-01-6 | 7200 | ug/kg | ND | | 5 | ND | | 5.4 | ND | | 6 | ND | | 5.9 |
| Trichlorofluoromethane | 75-69-4 | 310000000 | ug/kg | ND | | 5 | ND | | 5.4 | ND | | 6 | ND | | 5.9 |
| Vinyl Chloride | 75-01-4 | 4000 | ug/kg | ND | | 5 | ND | | 5.4 | ND | | 6 | ND | | 5.9 |

# Table 4
## Summary of Soil Analytical Results
## Comparison to USEPA Region III RBCs
## U. S. Steel - Proposed Samax 14.2-Acre Parcel
## Fairless Hills, Pennsylvania

| | CAS No. | EPA Region III Industrial Soil RBC | Location ID | STP-14 | | | STP-14 | | | STP-15 | | | STP-15 | | |
|---|---|---|---|---|---|---|---|---|---|---|---|---|---|---|---|
| | | | Sample ID | 012-STP-14_1.5-2.0 | | | 013-STP-14_11.5-12 | | | 036-STP-15_1.5-2.0' | | | 037-STP-15_8.5-9.0' | | |
| | | | Sample Date | 10/31/07 | | | 10/31/07 | | | 11/01/07 | | | 11/01/07 | | |
| | | | Depth to GW | 12.00 | | | 12.00 | | | 9.00 | | | 9.00 | | |
| | | | Start Depth (ft) | 1.50 | | | 11.50 | | | 1.50 | | | 8.50 | | |
| | | | End Depth (ft) | 2.00 | | | 12.00 | | | 2.00 | | | 9.00 | | |
| **TCL Semivolatiles** | | | Units | Result | Q | RL | Result | Q | RL | Result | Q | RL | Result | Q | RL |
| Acenaphthene | 83-32-9 | 61320000 | ug/kg | ND | | 7.5 | ND | | 7.2 | ND | | 7.8 | ND | | 7.4 |
| Acenaphthylene | 208-96-8 | NS | ug/kg | ND | | 7.5 | ND | | 7.2 | ND | | 7.8 | ND | | 7.4 |
| Acetaphenone | 98-86-2 | 102200000 | ug/kg | ND | | 37 | ND | | 35 | ND | | 39 | ND | | 36 |
| Anthracene | 120-12-7 | 310000000 | ug/kg | ND | | 7.5 | ND | | 7.2 | ND | | 7.8 | ND | | 7.4 |
| Atrazine | 1912-24-9 | 13000 | ug/kg | ND | | 37 | ND | | 35 | ND | | 39 | ND | | 36 |
| Benzaldehyde | 100-52-7 | 100000000 | ug/kg | ND | | 37 | ND | | 35 | ND | | 39 | ND | | 36 |
| Benzo(a)anthracene | 56-55-3 | 3920 | ug/kg | 2.8 | J | 7.5 | ND | | 7.2 | ND | | 7.8 | ND | | 7.4 |
| Benzo(a)pyrene | 50-32-8 | 392 | ug/kg | 3.1 | J | 7.5 | ND | | 7.2 | ND | | 7.8 | ND | | 7.4 |
| Benzo(b)fluoranthene | 205-99-2 | 3920 | ug/kg | 4.5 | J | 7.5 | ND | | 7.2 | ND | | 7.8 | ND | | 7.4 |
| Benzo(g,h,i)perylene | 191-24-2 | NS | ug/kg | 1.8 | J | 7.5 | ND | | 7.2 | ND | | 7.8 | ND | | 7.4 |
| Benzo(k)fluoranthene | 207-08-9 | 39200 | ug/kg | 1.5 | J | 7.5 | ND | | 7.2 | ND | | 7.8 | ND | | 7.4 |
| 1,1'-Biphenyl | 92-52-4 | 51100000 | ug/kg | ND | | 37 | ND | | 35 | ND | | 39 | ND | | 36 |
| bis(2-Chloroethoxy) methane | 111-91-1 | NS | ug/kg | ND | | 37 | ND | | 35 | ND | | 39 | ND | | 36 |
| bis(2-Chloroethyl) ether | 111-44-4 | 2600 | ug/kg | ND | | 7.5 | ND | | 7.2 | ND | | 7.8 | ND | | 7.4 |
| 2,2'-oxybis(1-Chloropropane) | 108-60-1 | 40900 | ug/kg | ND | | 7.5 | ND | | 7.2 | ND | | 7.8 | ND | | 7.4 |
| bis-(2-Ethylhexyl)phthalate | 117-81-7 | 204400 | ug/kg | 15 | J | 37 | ND | | 35 | 18 | J | 39 | ND | | 36 |
| 4-Bromophenyl-phenylether | 101-55-3 | NS | ug/kg | ND | | 37 | ND | | 35 | ND | | 39 | ND | | 36 |
| Butylbenzylphthalate | 85-68-7 | 200000000 | ug/kg | ND | | 37 | 3.6 | J | 35 | ND | | 39 | 11 | J | 36 |
| Caprolactam | 105-60-2 | 510000000 | ug/kg | ND | | 37 | 7.9 | J | 35 | ND | | 39 | ND | | 36 |
| Carbazole | 86-74-8 | 143080 | ug/kg | ND | | 7.5 | ND | | 7.2 | ND | | 7.8 | ND | | 7.4 |
| 4-Chloro-3-methylphenol | 59-50-7 | NS | ug/kg | ND | | 37 | ND | | 35 | ND | | 39 | ND | | 36 |
| 4-Chloroaniline | 106-47-8 | 4100000 | ug/kg | ND | | 37 | ND | | 35 | ND | | 39 | ND | | 36 |
| 2-Chloronapthalene | 91-58-7 | 81760000 | ug/kg | ND | | 7.5 | ND | | 7.2 | ND | | 7.8 | ND | | 7.4 |
| 2-Chlorophenol | 95-57-8 | 5110000 | ug/kg | ND | | 37 | ND | | 35 | ND | | 39 | ND | | 36 |
| 4-Chlorophenyl-phenylether | 7005-72-3 | NS | ug/kg | ND | | 37 | ND | | 35 | ND | | 39 | ND | | 36 |
| Chrysene | 218-01-9 | 392000 | ug/kg | 3.3 | J | 7.5 | ND | | 7.2 | ND | | 7.8 | ND | | 7.4 |
| 2-Methylphenol | 95-48-7 | 51100000 | ug/kg | ND | | 37 | ND | | 35 | ND | | 39 | ND | | 36 |
| 4-Methylphenol | 106-44-5 | 5100000 | ug/kg | ND | | 37 | ND | | 35 | ND | | 39 | ND | | 36 |
| Dibenzo(a,h)anthracene | 53-70-3 | 392 | ug/kg | ND | | 7.5 | ND | | 7.2 | ND | | 7.8 | ND | | 7.4 |
| Dibenzofuran | 132-64-9 | NS | ug/kg | ND | | 37 | ND | | 35 | ND | | 39 | ND | | 36 |
| 3,3'-Dichlorobenzidine | 91-94-1 | 6359 | ug/kg | ND | | 37 | ND | | 35 | ND | | 39 | ND | | 36 |
| 2,4-Dichlorophenol | 120-83-2 | 3100000 | ug/kg | ND | | 7.5 | ND | | 7.2 | ND | | 7.8 | ND | | 7.4 |
| Diethylphthalate | 84-66-2 | 817600000 | ug/kg | ND | | 37 | ND | | 35 | ND | | 39 | ND | | 36 |
| 2,4-Dimethylphenol | 105-67-9 | 20000000 | ug/kg | ND | | 37 | ND | | 35 | ND | | 39 | ND | | 36 |
| Dimethylphthalate | 131-11-3 | NS | ug/kg | ND | | 37 | ND | | 35 | ND | | 39 | ND | | 36 |
| Di-n-butylphthalate | 84-74-2 | 102200000 | ug/kg | 16 | J | 37 | ND | | 35 | 10 | J | 39 | 10 | J | 36 |
| 4,6-Dinitro-2-methylphenol | 534-52-1 | NS | ug/kg | ND | | 190 | ND | | 180 | ND | | 200 | ND | | 190 |
| 2,4-Dinitrophenol | 51-28-5 | 2044000 | ug/kg | ND | | 190 | ND | | 180 | ND | | 200 | ND | | 190 |
| 2,4-Dinitrotoluene | 121-14-2 | 2000000 | ug/kg | ND | | 37 | ND | | 35 | ND | | 39 | ND | | 36 |
| 2,6-Dinitrotoluene | 606-20-2 | 1022000 | ug/kg | ND | | 37 | ND | | 35 | ND | | 39 | ND | | 36 |
| Fluoranthene | 206-44-0 | 40880000 | ug/kg | 6.9 | J | 7.5 | ND | | 7.2 | 3.1 | J | 7.8 | ND | | 7.4 |
| Fluorene | 86-73-7 | 40880000 | ug/kg | ND | | 7.5 | ND | | 7.2 | ND | | 7.8 | ND | | 7.4 |
| Hexachlorobenzene | 118-74-1 | 1800 | ug/kg | ND | | 7.5 | ND | | 7.2 | ND | | 7.8 | ND | | 7.4 |
| Hexachlorobutadiene | 87-68-3 | 36687 | ug/kg | ND | | 7.5 | ND | | 7.2 | ND | | 7.8 | ND | | 7.4 |
| Hexachlorocyclopentadiene | 77-47-4 | 6132000 | ug/kg | ND | | 37 | ND | | 35 | ND | | 39 | ND | | 36 |
| Hexachloroethane | 67-72-1 | 204400 | ug/kg | ND | | 37 | ND | | 35 | ND | | 39 | ND | | 36 |
| Indeno(1,2,3-cd)pyrene | 193-39-5 | 3900 | ug/kg | 1.6 | J | 7.5 | ND | | 7.2 | ND | | 7.8 | ND | | 7.4 |
| Isophorone | 78-59-1 | 3012210.526 | ug/kg | ND | | 37 | ND | | 35 | ND | | 39 | ND | | 36 |
| 2-Methylnaphthalene | 91-57-6 | 4088000 | ug/kg | ND | | 7.5 | ND | | 7.2 | 5 | J | 7.8 | 2.5 | J | 7.4 |
| Naphthalene | 91-20-3 | 20440000 | ug/kg | ND | | 7.5 | ND | | 7.2 | 35 | | 7.8 | 15 | | 7.4 |
| 2-Nitroaniline | 88-74-4 | NS | ug/kg | ND | | 190 | ND | | 180 | ND | | 200 | ND | | 190 |
| 3-Nitroaniline | 99-09-2 | NS | ug/kg | ND | | 190 | ND | | 180 | ND | | 200 | ND | | 190 |
| 4-Nitroaniline | 100-01-6 | NS | ug/kg | ND | | 190 | ND | | 0.18 | ND | | 200 | ND | | 190 |
| Nitrobenzene | 98-95-3 | 511000 | ug/kg | ND | | 7.5 | ND | | 7.2 | ND | | 7.8 | ND | | 7.4 |
| 2-Nitrophenol | 88-75-5 | NS | ug/kg | ND | | 37 | ND | | 35 | ND | | 39 | ND | | 36 |
| 4-Nitrophenol | 100-02-7 | NS | ug/kg | ND | | 190 | ND | | 180 | ND | | 200 | ND | | 190 |
| N-Nitrosodi-n-propylamine | 621-64-7 | 400 | ug/kg | ND | | 7.5 | ND | | 7.2 | ND | | 7.8 | ND | | 7.4 |
| N-Nitrosodiphenylamine | 86-30-6 | 584000 | ug/kg | ND | | 7.5 | ND | | 7.2 | ND | | 7.8 | ND | | 7.4 |
| Di-n-octylphthalate | 117-84-0 | NS | ug/kg | ND | | 37 | ND | | 35 | ND | | 39 | ND | | 36 |
| Pentachlorophenol | 87-86-5 | 23847 | ug/kg | ND | | 37 | ND | | 35 | ND | | 39 | ND | | 36 |
| Phenanthrene | 85-01-8 | NS | ug/kg | 5.6 | J | 7.5 | 2.6 | J | 7.2 | 4.3 | J | 7.8 | 3.8 | J | 7.4 |
| Phenol | 108-95-2 | 310000000 | ug/kg | ND | | 7.5 | ND | | 7.2 | ND | | 7.8 | ND | | 7.4 |
| Pyrene | 129-00-0 | 31000000 | ug/kg | 5.4 | J | 7.5 | ND | | 7.2 | ND | | 7.8 | ND | | 7.4 |
| 2,4,5-Trichlorophenol | 95-95-4 | 102200000 | ug/kg | ND | | 37 | ND | | 35 | ND | | 39 | ND | | 36 |
| 2,4,6-Trichlorophenol | 88-06-2 | 260145 | ug/kg | ND | | 37 | ND | | 35 | ND | | 39 | ND | | 36 |

# Table 4
## Summary of Soil Analytical Results
## Comparison to USEPA Region III RBCs
## U. S. Steel - Proposed Samax 14.2-Acre Parcel
## Fairless Hills, Pennsylvania

| | CAS No. | EPA Region III Industrial Soil RBC | Location ID | STP-14 | | | STP-14 | | | STP-15 | | | STP-15 | | |
|---|---|---|---|---|---|---|---|---|---|---|---|---|---|---|---|
| | | | Sample ID | 012-STP-14_1.5-2.0 | | | 013-STP-14_11.5-12 | | | 036-STP-15_1.5-2.0' | | | 037-STP-15_8.5-9.0' | | |
| | | | Sample Date | 10/31/07 | | | 10/31/07 | | | 11/01/07 | | | 11/01/07 | | |
| | | | Depth to GW | 12.00 | | | 12.00 | | | 9.00 | | | 9.00 | | |
| | | | Start Depth (ft) | 1.50 | | | 11.50 | | | 1.50 | | | 8.50 | | |
| | | | End Depth (ft) | 2.00 | | | 12.00 | | | 2.00 | | | 9.00 | | |
| **PCB (ug/kg)** | | | **Units** | **Result** | **Q** | **RL** | **Result** | **Q** | **RL** | **Result** | **Q** | **RL** | **Result** | **Q** | **RL** |
| Aroclor 1016 | 12674-11-2 | 40880 | ug/kg | ND | | 37 | ND | | 36 | ND | | 39 | ND | | 36 |
| Aroclor 1221 | 11104-28-2 | 1430.8 | ug/kg | ND | | 37 | ND | | 36 | ND | | 39 | ND | | 36 |
| Aroclor 1232 | 11141-16-5 | 1430.8 | ug/kg | ND | | 37 | ND | | 36 | ND | | 39 | ND | | 36 |
| Aroclor 1242 | 53469-21-9 | 1430.8 | ug/kg | ND | | 37 | ND | | 36 | ND | | 39 | ND | | 36 |
| Aroclor 1248 | 12672-29-6 | 1430.8 | ug/kg | ND | | 37 | ND | | 36 | ND | | 39 | ND | | 36 |
| Aroclor 1254 | 11097-69-1 | 1430.8 | ug/kg | **1700** | | 37 | ND | | 36 | ND | | 39 | ND | | 36 |
| Aroclor 1260 | 11096-82-5 | 1430.8 | ug/kg | ND | | 37 | ND | | 36 | ND | | 39 | ND | | 36 |
| **PP Metals (mg/kg)** | | | **Units** | **Result** | **Q** | **RL** | **Result** | **Q** | **RL** | **Result** | **Q** | **RL** | **Result** | **Q** | **RL** |
| Antimony | 7440-36-0 | 408.8 | mg/kg | 0.042 | B | 0.22 | 0.059 | B | 0.22 | 0.027 | B | 0.23 | 0.012 | B | 0.22 |
| Arsenic | 7440-38-2 | 1.91 | mg/kg | **4.4** | J | 0.11 | **3.3** | J | 0.11 | **3.6** | | 0.12 | 1.9 | | 0.11 |
| Beryllium | 7440-41-7 | 2044 | mg/kg | 0.38 | | 0.11 | 0.41 | | 0.11 | 0.3 | | 0.12 | 0.22 | | 0.11 |
| Cadmium | 7440-43-9 | 511 | mg/kg | 0.089 | B | 0.11 | 0.094 | B | 0.11 | 0.081 | B | 0.12 | 0.057 | B | 0.11 |
| Chromium | 7440-47-3 | NS | mg/kg | 8.9 | J | 0.22 | 8.3 | J | 0.22 | 7.6 | | 0.23 | 5.9 | | 0.22 |
| Copper | 7440-50-8 | 40880 | mg/kg | 11 | | 0.22 | 10.5 | | 0.22 | 11.2 | J | 0.23 | 7.9 | J | 0.22 |
| Lead | 7439-92-1 | NS | mg/kg | 8.4 | | 0.11 | 7.4 | | 0.11 | 8.5 | | 0.12 | 4.1 | | 0.11 |
| Mercury | 7439-97-6 | NS | mg/kg | 0.03 | B | 0.037 | 0.0092 | B | 0.036 | 0.027 | B | 0.039 | 0.0093 | B | 0.036 |
| Nickel | 7440-02-0 | 20440 | mg/kg | 12.3 | J | 0.11 | 11.1 | J | 0.11 | 12.6 | | 0.12 | 9.6 | | 0.11 |
| Selenium | 7782-49-2 | 5110 | mg/kg | 0.47 | B | 0.56 | 0.38 | B | 0.54 | 0.17 | B | 0.59 | 0.096 | B | 0.55 |
| Silver | 7440-22-4 | 5110 | mg/kg | ND | | 0.11 | ND | | 0.11 | 0.011 | B | 0.12 | 0.008 | B | 0.11 |
| Thallium | 7440-28-0 | 71.54 | mg/kg | 0.078 | B | 0.11 | 0.07 | B | 0.11 | 0.055 | B | 0.12 | 0.031 | B | 0.11 |
| Zinc | 7440-66-6 | 306600 | mg/kg | 28.8 | J | 0.56 | 27.1 | J | 0.54 | 28.8 | J | 0.59 | 22.7 | J | 0.55 |
| **General Chemistry** | | | **Units** | **Result** | **Q** | **RL** | **Result** | **Q** | **RL** | **Result** | **Q** | **RL** | **Result** | **Q** | **RL** |
| Percent Solids | none | NS | percent | 88.9 | | | 92.1 | | | 85.4 | | | 91 | | |

Laboratory Qualifiers:

Organic Qualifiers:

B = Analyte was detected in the method blank.

J = Estimated Result. Result is less than RL.

Inorganic Qualifiers:

B = Analyte was detected in the method blank.

J = Estimated Result. Result is less than RL.

Notes:

EPA = Environmental Protection Agency

RBC = Risk Based Criterium for EPA Region III Industrial Soil.

RL = Reporting Limit.

NS = No EPA Remediation Standard.

NA = Not Analyzed or Not Applicable.

ND = Not Detetected at concentrations above the laboratory reporting limit.

ug/kg = microgram per kilogram.

mg/kg = milligram per kilogram.

**9421** = Result or reporting limit exceeds the EPA Region III Industrial Soil RBC

1. MSC listed for cis-1,3-Dichloropropene aNDtrans-1,3-Dichloropropene is based on the MSC for 1,3-Dichloropropene (Total).
2. Chromium III was used as the most stringent chromium standard.

# Table 4
## Summary of Soil Analytical Results
## Comparison to USEPA Region III RBCs
## U. S. Steel - Proposed Samax 14.2-Acre Parcel
## Fairless Hills, Pennsylvania

| | CAS No. | EPA Region III Industrial Soil RBC | Location ID | 016-FB-2-103107 | | | 007-FB-1_103007 | | | 031-FB-3_110107 | | | 011-TB-1-103107 | | | 027-TB-2_103007 | | | 038-TB-3_110107 | | |
|---|---|---|---|---|---|---|---|---|---|---|---|---|---|---|---|---|---|---|---|---|---|
| | | | Sample ID | C7K010229-005 | | | C7J310198-007 | | | C7K020245-004 | | | C7J310198-011 | | | C7K010229-016 | | | C7K020245-011 | | |
| | | | Sample Date | 10/31/07 | | | 10/30/07 | | | 10/30/07 | | | 10/31/07 | | | 10/30/07 | | | 10/30/07 | | |
| | | | Depth to GW | WATER | | | WATER | | | WATER | | | WATER | | | WATER | | | WATER | | |
| | | | Start Depth (ft) | 1.00 | | | 1.00 | | | 1.00 | | | 1.00 | | | 1.00 | | | 1.00 | | |
| | | | End Depth (ft) | ug/L | | | ug/L | | | ug/L | | | ug/L | | | ug/L | | | ug/L | | |
| **TCL Volatiles** | | | **Units** | **Result** | **Q** | **RL** | **Result** | **Q** | **RL** | **Result** | **Q** | **RL** | **Result** | **Q** | **RL** | **Result** | **Q** | **RL** | **Result** | **Q** | **RL** |
| Acetone | 67-64-1 | 920000000 | ug/kg | ND | | 5 | 3.2 | J | 5 | 2.8 | J | 5 | 3.3 | J | 5 | ND | | 5 | ND | | 5 |
| Benzene | 71-43-2 | 52000 | ug/kg | ND | | 1 | ND | | 1 | ND | | 1 | ND | | 1 | ND | | 1 | ND | | 1 |
| Bromodichloromethane | 75-27-4 | 46000 | ug/kg | ND | | 1 | ND | | 1 | ND | | 1 | ND | | 1 | ND | | 1 | ND | | 1 |
| Bromoform | 75-25-2 | 360000 | ug/kg | ND | | 1 | ND | | 1 | ND | | 1 | ND | | 1 | ND | | 1 | ND | | 1 |
| Bromomethane | 74-83-9 | 1400000 | ug/kg | ND | | 1 | ND | | 1 | ND | | 1 | ND | | 1 | ND | | 1 | ND | | 1 |
| 2-Butanone | 78-93-3 | 610000000 | ug/kg | ND | | 5 | ND | | 5 | ND | | 5 | ND | | 5 | ND | | 5 | ND | | 5 |
| Carbon Disulfide | 75-15-0 | 100000000 | ug/kg | ND | | 1 | ND | | 1 | ND | | 1 | ND | | 1 | ND | | 1 | ND | | 1 |
| Carbon Tetrachloride | 56-23-5 | 22000 | ug/kg | ND | | 1 | ND | | 1 | ND | | 1 | ND | | 1 | ND | | 1 | ND | | 1 |
| Chlorobenzene | 108-90-7 | 20000000 | ug/kg | ND | | 1 | ND | | 1 | ND | | 1 | ND | | 1 | ND | | 1 | ND | | 1 |
| Chloroethane | 75-00-3 | 990000 | ug/kg | ND | | 1 | ND | | 1 | ND | | 1 | ND | | 1 | ND | | 1 | ND | | 1 |
| Chloroform | 67-66-3 | 10000000 | ug/kg | ND | | 1 | ND | | 1 | ND | | 1 | ND | | 1 | ND | | 1 | ND | | 1 |
| Chloromethane | 74-87-3 | NS | ug/kg | 0.46 | J | 1 | ND | | 1 | ND | | 1 | ND | | 1 | ND | | 1 | ND | | 1 |
| Isopropylbenzene | 98-82-8 | 100000000 | ug/kg | ND | | 1 | ND | | 1 | ND | | 1 | ND | | 1 | ND | | 1 | ND | | 1 |
| Cyclohexane | 110-82-7 | NS | ug/kg | ND | | 1 | ND | | 1 | ND | | 1 | ND | | 1 | ND | | 1 | ND | | 1 |
| 1,2-Dibromoethane | 106-93-4 | 1400 | ug/kg | ND | | 1 | ND | | 1 | ND | | 1 | ND | | 1 | ND | | 1 | ND | | 1 |
| 1,2-Dibromo-3-chloropropane | 96-12-8 | 2000 | ug/kg | ND | | 1 | ND | | 1 | ND | | 1 | ND | | 1 | ND | | 1 | ND | | 1 |
| Dibromochloromethane | 124-48-1 | 34000 | ug/kg | ND | | 1 | ND | | 1 | ND | | 1 | ND | | 1 | ND | | 1 | ND | | 1 |
| 1,4-Dichlorobenzene | 106-46-7 | 120000 | ug/kg | ND | | 1 | ND | | 1 | ND | | 1 | ND | | 1 | ND | | 1 | ND | | 1 |
| 1,2-Dichlorobenzene | 95-50-1 | 92000000 | ug/kg | ND | | 1 | ND | | 1 | ND | | 1 | ND | | 1 | ND | | 1 | ND | | 1 |
| 1,3-Dichlorobenzene | 541-73-1 | 3100000 | ug/kg | ND | | 1 | ND | | 1 | ND | | 1 | ND | | 1 | ND | | 1 | ND | | 1 |
| Dichlorodifluoromethane | 75-71-8 | 200000000 | ug/kg | ND | | 1 | ND | | 1 | ND | | 1 | ND | | 1 | ND | | 1 | ND | | 1 |
| 1,1-Dichloroethane | 75-34-3 | 200000000 | ug/kg | ND | | 1 | ND | | 1 | ND | | 1 | ND | | 1 | ND | | 1 | ND | | 1 |
| 1,2-Dichloroethane | 107-06-2 | 31000 | ug/kg | ND | | 1 | ND | | 1 | ND | | 1 | ND | | 1 | ND | | 1 | ND | | 1 |
| trans-1,2-Dichloroethene | 156-60-5 | 20000000 | ug/kg | ND | | 1 | ND | | 1 | ND | | 1 | ND | | 1 | ND | | 1 | ND | | 1 |
| cis-1,2-Dichloroethene | 156-59-2 | 9200000 | ug/kg | ND | | 1 | ND | | 1 | ND | | 1 | ND | | 1 | ND | | 1 | ND | | 1 |
| 1,1-Dichloroethene | 75-35-4 | 51000000 | ug/kg | ND | | 1 | ND | | 1 | ND | | 1 | ND | | 1 | ND | | 1 | ND | | 1 |
| 1,2-Dichloropropane | 78-87-5 | 42000 | ug/kg | ND | | 1 | ND | | 1 | ND | | 1 | ND | | 1 | ND | | 1 | ND | | 1 |
| trans-1,3-Dichloropropene | 10061-02-6 | 29000 | ug/kg | ND | | 1 | ND | | 1 | ND | | 1 | ND | | 1 | ND | | 1 | ND | | 1 |
| cis-1,3-Dichloropropene | 10061-01-5 | 2900000 | ug/kg | ND | | 1 | ND | | 1 | ND | | 1 | ND | | 1 | ND | | 1 | ND | | 1 |
| Ethylbenzene | 100-41-4 | 100000000 | ug/kg | ND | | 1 | ND | | 1 | ND | | 1 | ND | | 1 | ND | | 1 | ND | | 1 |
| 2-Hexanone | 591-78-6 | NS | ug/kg | ND | | 5 | ND | | 5 | ND | | 5 | ND | | 5 | ND | | 5 | ND | | 5 |
| Methyl Acetate | 79-20-9 | 1000000000 | ug/kg | ND | | 1 | ND | | 1 | ND | | 1 | ND | | 1 | ND | | 1 | ND | | 1 |
| Methyl tert-Butyl Ether | 1634-04-4 | 720000 | ug/kg | ND | | 1 | ND | | 1 | ND | | 1 | ND | | 1 | ND | | 1 | ND | | 1 |
| 4-Methyl-2-pentanone | 108-10-1 | NS | ug/kg | ND | | 5 | ND | | 5 | ND | | 5 | ND | | 5 | ND | | 5 | ND | | 5 |
| Methylcyclohexane | 108-87-2 | NS | ug/kg | ND | | 1 | ND | | 1 | ND | | 1 | ND | | 1 | ND | | 1 | ND | | 1 |
| Methylene Chloride | 75-09-2 | 380000 | ug/kg | ND | | 1 | 0.27 | J | 1 | 0.28 | J,B | 1 | 1 | | 1 | ND | | 1 | 0.51 | J,B | 1 |
| Styrene | 100-42-5 | 200000000 | ug/kg | ND | | 1 | ND | | 1 | ND | | 1 | ND | | 1 | ND | | 1 | ND | | 1 |
| 1,1,2,2-Tetrachloroethane | 79-34-5 | 14000 | ug/kg | ND | | 1 | ND | | 1 | ND | | 1 | ND | | 1 | ND | | 1 | ND | | 1 |
| Tetrachloroethene | 127-18-4 | 5300 | ug/kg | ND | | 1 | ND | | 1 | ND | | 1 | ND | | 1 | ND | | 1 | ND | | 1 |
| Toluene | 108-88-3 | 82000000 | ug/kg | ND | | 1 | ND | | 1 | ND | | 1 | ND | | 1 | ND | | 1 | ND | | 1 |
| Xylenes (Total) | 1330-20-7 | 200000000 | ug/kg | ND | | 3 | ND | | 3 | ND | | 3 | ND | | 3 | ND | | 3 | ND | | 3 |
| 1,1,2-Trichloro-1,2,2-trifluoroethane | 76-13-1 | 31000000000 | ug/kg | ND | | 1 | ND | | 1 | ND | | 1 | ND | | 1 | ND | | 1 | ND | | 1 |
| 1,2,4-Trichlorobenzene | 120-82-1 | 10000000 | ug/kg | ND | | 1 | ND | | 1 | ND | | 1 | ND | | 1 | ND | | 1 | ND | | 1 |
| 1,1,1-Trichloroethane | 71-55-6 | 290000000 | ug/kg | ND | | 1 | ND | | 1 | ND | | 1 | ND | | 1 | ND | | 1 | ND | | 1 |
| 1,1,2-Trichloroethane | 79-00-5 | 50000 | ug/kg | ND | | 1 | ND | | 1 | ND | | 1 | ND | | 1 | ND | | 1 | ND | | 1 |
| Trichloroethene | 79-01-6 | 7200 | ug/kg | ND | | 1 | ND | | 1 | ND | | 1 | ND | | 1 | ND | | 1 | ND | | 1 |
| Trichlorofluoromethane | 75-69-4 | 310000000 | ug/kg | ND | | 1 | ND | | 1 | ND | | 1 | ND | | 1 | ND | | 1 | ND | | 1 |
| Vinyl Chloride | 75-01-4 | 4000 | ug/kg | ND | | 1 | ND | | 1 | ND | | 1 | ND | | 1 | ND | | 1 | ND | | 1 |

# Table 4
## Summary of Soil Analytical Results
## Comparison to USEPA Region III RBCs
## U. S. Steel - Proposed Samax 14.2-Acre Parcel
## Fairless Hills, Pennsylvania

| | CAS No. | EPA Region III Industrial Soil RBC | Location ID | 016-FB-2-103107 | | | 007-FB-1_103007 | | | 031-FB-3_110107 | | | 011-TB-1-103107 | | | 027-TB-2_103007 | | | 038-TB-3_110107 | | |
|---|---|---|---|---|---|---|---|---|---|---|---|---|---|---|---|---|---|---|---|---|---|
| | | | Sample ID | C7K010229-005 | | | C7J310198-007 | | | C7K020245-004 | | | C7J310198-011 | | | C7K010229-016 | | | C7K020245-011 | | |
| | | | Sample Date | 10/31/07 | | | 10/30/07 | | | 10/30/07 | | | 10/31/07 | | | 10/30/07 | | | 10/30/07 | | |
| | | | Depth to GW | WATER | | | WATER | | | WATER | | | WATER | | | WATER | | | WATER | | |
| | | | Start Depth (ft) | 1.00 | | | 1.00 | | | 1.00 | | | 1.00 | | | 1.00 | | | 1.00 | | |
| | | | End Depth (ft) | ug/L | | | ug/L | | | ug/L | | | ug/L | | | ug/L | | | ug/L | | |
| **TCL Semivolatiles** | | | Units | Result | Q | RL | Result | Q | RL | Result | Q | RL | Result | Q | RL | Result | Q | RL | Result | Q | RL |
| Acenaphthene | 83-32-9 | 61320000 | ug/kg | ND | | 0.19 | ND | | 0.19 | ND | | 0.19 | - | | - | - | | - | - | | - |
| Acenaphthylene | 208-96-8 | NS | ug/kg | ND | | 0.19 | ND | | 0.19 | ND | | 0.19 | - | | - | - | | - | - | | - |
| Acetaphenone | 98-86-2 | 102200000 | ug/kg | ND | | 0.96 | ND | | 0.95 | ND | | 0.95 | - | | - | - | | - | - | | - |
| Anthracene | 120-12-7 | 310000000 | ug/kg | ND | | 0.19 | ND | | 0.19 | ND | | 0.19 | - | | - | - | | - | - | | - |
| Atrazine | 1912-24-9 | 13000 | ug/kg | ND | | 0.96 | ND | | 0.95 | ND | | 0.95 | - | | - | - | | - | - | | - |
| Benzaldehyde | 100-52-7 | 100000000 | ug/kg | ND | | 0.96 | ND | | 0.95 | ND | | 0.95 | - | | - | - | | - | - | | - |
| Benzo(a)anthracene | 56-55-3 | 3920 | ug/kg | ND | | 0.19 | ND | | 0.19 | ND | | 0.19 | - | | - | - | | - | - | | - |
| Benzo(a)pyrene | 50-32-8 | 392 | ug/kg | ND | | 0.19 | ND | | 0.19 | ND | | 0.19 | - | | - | - | | - | - | | - |
| Benzo(b)fluoranthene | 205-99-2 | 3920 | ug/kg | ND | | 0.19 | ND | | 0.19 | ND | | 0.19 | - | | - | - | | - | - | | - |
| Benzo(g,h,i)perylene | 191-24-2 | NS | ug/kg | ND | | 0.19 | ND | | 0.19 | ND | | 0.19 | - | | - | - | | - | - | | - |
| Benzo(k)fluoranthene | 207-08-9 | 39200 | ug/kg | ND | | 0.19 | ND | | 0.19 | ND | | 0.19 | - | | - | - | | - | - | | - |
| 1,1'-Biphenyl | 92-52-4 | 51100000 | ug/kg | ND | | 0.96 | ND | | 0.95 | ND | | 0.95 | - | | - | - | | - | - | | - |
| bis(2-Chloroethoxy) methane | 111-91-1 | NS | ug/kg | ND | | 0.96 | ND | | 0.95 | ND | | 0.95 | - | | - | - | | - | - | | - |
| bis(2-Chloroethyl) ether | 111-44-4 | 2600 | ug/kg | ND | | 0.19 | ND | | 0.19 | ND | | 0.19 | - | | - | - | | - | - | | - |
| 2,2'-oxybis(1-Chloropropane) | 108-60-1 | 40900 | ug/kg | ND | | 0.19 | ND | | 0.19 | ND | | 0.19 | - | | - | - | | - | - | | - |
| bis-(2-Ethylhexyl)phthalate | 117-81-7 | 204400 | ug/kg | ND | | 0.96 | ND | | 0.95 | 0.17 | J | 0.95 | - | | - | - | | - | - | | - |
| 4-Bromophenyl-phenylether | 101-55-3 | NS | ug/kg | ND | | 0.96 | ND | | 0.95 | ND | | 0.95 | - | | - | - | | - | - | | - |
| Butylbenzylphthalate | 85-68-7 | 200000000 | ug/kg | ND | | 0.96 | 0.18 | J | 0.95 | ND | | 0.95 | - | | - | - | | - | - | | - |
| Caprolactam | 105-60-2 | 510000000 | ug/kg | ND | | 0.96 | 0.27 | J | 0.95 | ND | | 0.95 | - | | - | - | | - | - | | - |
| Carbazole | 86-74-8 | 143080 | ug/kg | ND | | 0.19 | ND | | 0.19 | ND | | 0.19 | - | | - | - | | - | - | | - |
| 4-Chloro-3-methylphenol | 59-50-7 | NS | ug/kg | ND | | 0.96 | ND | | 0.95 | ND | | 0.95 | - | | - | - | | - | - | | - |
| 4-Chloroaniline | 106-47-8 | 4100000 | ug/kg | ND | | 0.96 | ND | | 0.95 | ND | | 0.95 | - | | - | - | | - | - | | - |
| 2-Chloronapthalene | 91-58-7 | 817600000 | ug/kg | ND | | 0.19 | ND | | 0.19 | ND | | 0.19 | - | | - | - | | - | - | | - |
| 2-Chlorophenol | 95-57-8 | 5110000 | ug/kg | ND | | 0.96 | ND | | 0.95 | ND | | 0.95 | - | | - | - | | - | - | | - |
| 4-Chlorophenyl-phenylether | 7005-72-3 | NS | ug/kg | ND | | 0.96 | ND | | 0.95 | ND | | 0.95 | - | | - | - | | - | - | | - |
| Chrysene | 218-01-9 | 392000 | ug/kg | ND | | 0.19 | ND | | 0.19 | ND | | 0.19 | - | | - | - | | - | - | | - |
| 2-Methylphenol | 95-48-7 | 51100000 | ug/kg | ND | | 0.96 | ND | | 0.95 | ND | | 0.95 | - | | - | - | | - | - | | - |
| 4-Methylphenol | 106-44-5 | 5100000 | ug/kg | ND | | 0.96 | ND | | 0.95 | ND | | 0.95 | - | | - | - | | - | - | | - |
| Dibenzo(a,h)anthracene | 53-70-3 | 392 | ug/kg | ND | | 0.19 | ND | | 0.19 | ND | | 0.19 | - | | - | - | | - | - | | - |
| Dibenzofuran | 132-64-9 | NS | ug/kg | ND | | 0.96 | ND | | 0.95 | ND | | 0.95 | - | | - | - | | - | - | | - |
| 3,3'-Dichlorobenzidine | 91-94-1 | 6359 | ug/kg | ND | | 0.96 | ND | | 0.95 | ND | | 0.95 | - | | - | - | | - | - | | - |
| 2,4-Dichlorophenol | 120-83-2 | 3100000 | ug/kg | ND | | 0.19 | ND | | 0.19 | ND | | 0.19 | - | | - | - | | - | - | | - |
| Diethylphthalate | 84-66-2 | 817600000 | ug/kg | ND | | 0.96 | ND | | 0.95 | ND | | 0.95 | - | | - | - | | - | - | | - |
| 2,4-Dimethylphenol | 105-67-9 | 20000000 | ug/kg | ND | | 0.96 | ND | | 0.95 | ND | | 0.95 | - | | - | - | | - | - | | - |
| Dimethylphthalate | 131-11-3 | NS | ug/kg | ND | | 0.96 | ND | | 0.95 | ND | | 0.95 | - | | - | - | | - | - | | - |
| Di-n-butylphthalate | 84-74-2 | 102200000 | ug/kg | ND | | 0.96 | 0.091 | J | 0.95 | ND | | 0.95 | - | | - | - | | - | - | | - |
| 4,6-Dinitro-2-methylphenol | 534-52-1 | NS | ug/kg | ND | | 4.8 | ND | | 4.8 | ND | | 4.8 | - | | - | - | | - | - | | - |
| 2,4-Dinitrophenol | 51-28-5 | 2044000 | ug/kg | ND | | 4.8 | ND | | 4.8 | ND | | 4.8 | - | | - | - | | - | - | | - |
| 2,4-Dinitrotoluene | 121-14-2 | 2000000 | ug/kg | ND | | 0.96 | ND | | 0.95 | ND | | 0.95 | - | | - | - | | - | - | | - |
| 2,6-Dinitrotoluene | 606-20-2 | 1022000 | ug/kg | ND | | 0.96 | ND | | 0.95 | ND | | 0.95 | - | | - | - | | - | - | | - |
| Fluoranthene | 206-44-0 | 40880000 | ug/kg | ND | | 0.19 | ND | | 0.19 | ND | | 0.19 | - | | - | - | | - | - | | - |
| Fluorene | 86-73-7 | 40880000 | ug/kg | ND | | 0.19 | ND | | 0.19 | ND | | 0.19 | - | | - | - | | - | - | | - |
| Hexachlorobenzene | 118-74-1 | 1900 | ug/kg | ND | | 0.19 | ND | | 0.19 | ND | | 0.19 | - | | - | - | | - | - | | - |
| Hexachlorobutadiene | 87-68-3 | 36687 | ug/kg | ND | | 0.19 | ND | | 0.19 | ND | | 0.19 | - | | - | - | | - | - | | - |
| Hexachlorocyclopentadiene | 77-47-4 | 6132000 | ug/kg | ND | | 0.96 | ND | | 0.95 | ND | | 0.95 | - | | - | - | | - | - | | - |
| Hexachloroethane | 67-72-1 | 204400 | ug/kg | ND | | 0.96 | ND | | 0.95 | ND | | 0.95 | - | | - | - | | - | - | | - |
| Indeno(1,2,3-cd)pyrene | 193-39-5 | 3900 | ug/kg | ND | | 0.19 | ND | | 0.19 | ND | | 0.19 | - | | - | - | | - | - | | - |
| Isophorone | 78-59-1 | 3012210.526 | ug/kg | ND | | 0.96 | ND | | 0.95 | ND | | 0.95 | - | | - | - | | - | - | | - |
| 2-Methylnaphthalene | 91-57-6 | 4088000 | ug/kg | ND | | 0.19 | ND | | 0.19 | ND | | 0.19 | - | | - | - | | - | - | | - |
| Naphthalene | 91-20-3 | 20440000 | ug/kg | ND | | 0.19 | ND | | 0.19 | ND | | 0.19 | - | | - | - | | - | - | | - |
| 2-Nitroaniline | 88-74-4 | NS | ug/kg | ND | | 4.8 | ND | | 4.8 | ND | | 4.8 | - | | - | - | | - | - | | - |
| 3-Nitroaniline | 99-09-2 | NS | ug/kg | ND | | 4.8 | ND | | 4.8 | ND | | 4.8 | - | | - | - | | - | - | | - |
| 4-Nitroaniline | 100-01-6 | NS | ug/kg | ND | | 4.8 | ND | | 4.8 | ND | | 4.8 | - | | - | - | | - | - | | - |
| Nitrobenzene | 98-95-3 | 511000 | ug/kg | ND | | 0.19 | ND | | 0.19 | ND | | 0.19 | - | | - | - | | - | - | | - |
| 2-Nitrophenol | 88-75-5 | NS | ug/kg | ND | | 0.96 | ND | | 0.95 | ND | | 0.95 | - | | - | - | | - | - | | - |
| 4-Nitrophenol | 100-02-7 | NS | ug/kg | ND | | 4.8 | ND | | 4.8 | ND | | 4.8 | - | | - | - | | - | - | | - |
| N-Nitrosodi-n-propylamine | 621-64-7 | 400 | ug/kg | ND | | 0.19 | ND | | 0.19 | ND | | 0.19 | - | | - | - | | - | - | | - |
| N-Nitrosodiphenylamine | 86-30-6 | 584000 | ug/kg | ND | | 0.19 | ND | | 0.19 | ND | | 0.19 | - | | - | - | | - | - | | - |
| Di-n-octylphthalate | 117-84-0 | NS | ug/kg | ND | | 0.96 | ND | | 0.95 | ND | | 0.95 | - | | - | - | | - | - | | - |
| Pentachlorophenol | 87-86-5 | 23847 | ug/kg | ND | | 0.96 | ND | | 0.95 | ND | | 0.95 | - | | - | - | | - | - | | - |
| Phenanthrene | 85-01-8 | NS | ug/kg | ND | | 0.19 | 0.085 | J | 0.19 | ND | | 0.19 | - | | - | - | | - | - | | - |
| Phenol | 108-95-2 | 310000000 | ug/kg | ND | | 0.19 | ND | | 0.19 | ND | | 0.19 | - | | - | - | | - | - | | - |
| Pyrene | 129-00-0 | 31000000 | ug/kg | ND | | 0.19 | ND | | 0.19 | ND | | 0.19 | - | | - | - | | - | - | | - |
| 2,4,5-Trichlorophenol | 95-95-4 | 102200000 | ug/kg | ND | | 0.96 | ND | | 0.95 | ND | | 0.95 | - | | - | - | | - | - | | - |
| 2,4,6-Trichlorophenol | 88-06-2 | 260145 | ug/kg | ND | | 0.96 | ND | | 0.95 | ND | | 0.95 | - | | - | - | | - | - | | - |

# Table 4
## Summary of Soil Analytical Results
## Comparison to USEPA Region III RBCs
## U. S. Steel - Proposed Samax 14.2-Acre Parcel
## Fairless Hills, Pennsylvania

| | CAS No. | EPA Region III Industrial Soil RBC | Location ID | 016-FB-2-103107 | | | 007-FB-1_103007 | | | 031-FB-3_110107 | | | 011-TB-1-103107 | | | 027-TB-2_103007 | | | 038-TB-3_110107 | | |
|---|---|---|---|---|---|---|---|---|---|---|---|---|---|---|---|---|---|---|---|---|---|
| | | | Sample ID | C7K010229-005 | | | C7J310198-007 | | | C7K020245-004 | | | C7J310198-011 | | | C7K010229-016 | | | C7K020245-011 | | |
| | | | Sample Date | 10/31/07 | | | 10/30/07 | | | 10/30/07 | | | 10/31/07 | | | 10/30/07 | | | 10/30/07 | | |
| | | | Depth to GW | WATER | | | WATER | | | WATER | | | WATER | | | WATER | | | WATER | | |
| | | | Start Depth (ft) | 1.00 | | | 1.00 | | | 1.00 | | | 1.00 | | | 1.00 | | | 1.00 | | |
| | | | End Depth (ft) | ug/L | | | ug/L | | | ug/L | | | ug/L | | | ug/L | | | ug/L | | |
| **PCB (ug/kg)** | | | **Units** | **Result** | **Q** | **RL** | **Result** | **Q** | **RL** | **Result** | **Q** | **RL** | **Result** | **Q** | **RL** | **Result** | **Q** | **RL** | **Result** | **Q** | **RL** |
| Aroclor 1016 | 12674-11-2 | 40880 | ug/kg | ND | | 0.95 | ND | | 0.95 | ND | | 0.95 | - | | - | - | | - | - | | - |
| Aroclor 1221 | 11104-28-2 | 1430.8 | ug/kg | ND | | 0.95 | ND | | 0.95 | ND | | 0.95 | - | | - | - | | - | - | | - |
| Aroclor 1232 | 11141-16-5 | 1430.8 | ug/kg | ND | | 0.95 | ND | | 0.95 | ND | | 0.95 | - | | - | - | | - | - | | - |
| Aroclor 1242 | 53469-21-9 | 1430.8 | ug/kg | ND | | 0.95 | ND | | 0.95 | ND | | 0.95 | - | | - | - | | - | - | | - |
| Aroclor 1248 | 12672-29-6 | 1430.8 | ug/kg | ND | | 0.95 | ND | | 0.95 | ND | | 0.95 | - | | - | - | | - | - | | - |
| Aroclor 1254 | 11097-69-1 | 1430.8 | ug/kg | ND | | 0.95 | ND | | 0.95 | ND | | 0.95 | - | | - | - | | - | - | | - |
| Aroclor 1260 | 11096-82-5 | 1430.8 | ug/kg | ND | | 0.95 | ND | | 0.95 | ND | | 0.95 | - | | - | - | | - | - | | - |
| **PP Metals (mg/kg)** | | | **Units** | **Result** | **Q** | **RL** | **Result** | **Q** | **RL** | **Result** | **Q** | **RL** | **Result** | **Q** | **RL** | **Result** | **Q** | **RL** | **Result** | **Q** | **RL** |
| Antimony | 7440-36-0 | 408.8 | mg/kg | ND | | 2 | ND | | 2 | 0.23 | B | 2 | - | | - | - | | - | - | | - |
| Arsenic | 7440-38-2 | 1.91 | mg/kg | ND | | 1 | ND | | 1 | 0.33 | B J | 1 | - | | - | - | | - | - | | - |
| Beryllium | 7440-41-7 | 2044 | mg/kg | ND | | 1 | ND | | 1 | ND | | 1 | - | | - | - | | - | - | | - |
| Cadmium | 7440-43-9 | 511 | mg/kg | ND | | 1 | ND | | 1 | ND | | 1 | - | | - | - | | - | - | | - |
| Chromium | 7440-47-3 | NS | mg/kg | 1.6 | B J | 2 | 1.4 | B J | 2 | 1.6 | J | 2 | - | | - | - | | - | - | | - |
| Copper | 7440-50-8 | 40880 | mg/kg | ND | | 2 | 0.17 | B | 2 | 2.8 | B | 2 | - | | - | - | | - | - | | - |
| Lead | 7439-92-1 | NS | mg/kg | ND | | 1 | ND | | 1 | ND | | 1 | - | | - | - | | - | - | | - |
| Mercury | 7439-97-6 | NS | mg/kg | ND | | 0.2 | ND | | 0.2 | ND | | 0.2 | - | | - | - | | - | - | | - |
| Nickel | 7440-02-0 | 20440 | mg/kg | ND | | 1 | ND | | 1 | 0.073 | B | 1 | - | | - | - | | - | - | | - |
| Selenium | 7782-49-2 | 5110 | mg/kg | ND | | 5 | ND | | 5 | ND | | 5 | - | | - | - | | - | - | | - |
| Silver | 7440-22-4 | 5110 | mg/kg | ND | | 1 | ND | | 1 | ND | | 1 | - | | - | - | | - | - | | - |
| Thallium | 7440-28-0 | 71.54 | mg/kg | 0.21 | B | 1 | 0.048 | B | 1 | 0.089 | B | 1 | - | | - | - | | - | - | | - |
| Zinc | 7440-66-6 | 306600 | mg/kg | ND | | 5 | 0.93 | B | 5 | 1.1 | J | 5 | - | | - | - | | - | - | | - |
| **General Chemistry** | | | **Units** | **Result** | **Q** | **RL** | **Result** | **Q** | **RL** | **Result** | **Q** | **RL** | **Result** | **Q** | **RL** | **Result** | **Q** | **RL** | **Result** | **Q** | **RL** |
| Percent Solids | none | NS | percent | NA | | NA | NA | | NA | NA | | NA | - | | - | - | | - | - | | - |

Laboratory Qualifiers:

Organic Qualifiers:

B = Analyte was detected in the method blank.
J = Estimated Result. Result is less than RL

Inorganic Qualifiers:

B = Analyte was detected in the method blank.
J = Estimated Result. Result is less than RL

Notes:

PADEP = Pensylvania Department of Environmental Protection
MSC = PADEP's Medium Specific Concentration for surface and subsurface soil.
RL = Reporting Limit.
NS = No Act 2 Remediation Standard
NA = Not Analyzed or Not Applicable.
ND = Not Detatected at concentrations above the laboratory reporting limit.
ug/kg = microgram per kilogram.
mg/kg = milligram per kilogram.
**9421** = Result or reporting limit exceeds the EPA Region III Industrial Soil RBC

1. MSC listed for cis-1,3-Dichloropropene aNDtrans-1,3-Dichloropropene is based on the MSC for 1,3-Dichloropropene (Total)
2. Chromium III was used as the most stringent chromium standard.

APPENDIX D-22

METEOROLOGICAL DATA RECOMMENDED FOR USE BY DEPARTMENT FOR MODELING

NOTE: The meteorological data is provided on a disk because it would be approximately 1,500 pages long if printed out. A hard copy of the key to the data on the disk is provided in this appendix.

## *Meteorological data files*

The AERMOD model uses hourly meteorological data from separate surface and profile data files as one of the basic model inputs.

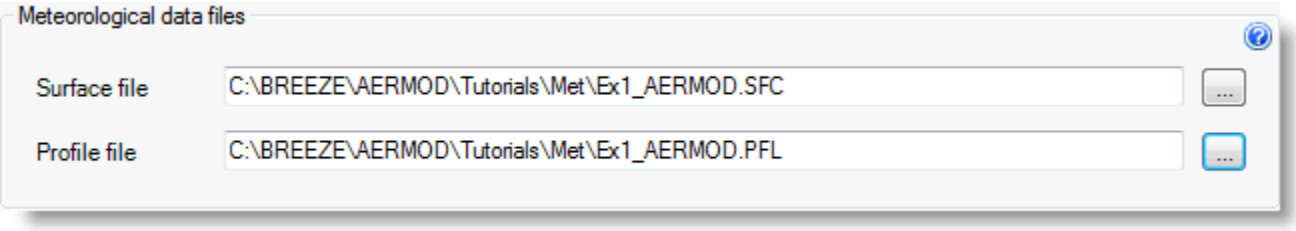


Model Keyword: SURFFILE and PROFFILE

**Surface file:** Click on the Browse button to select a surface meteorological data file for use in the model run.

The surface meteorological data file consists of a header record containing information on the meteorological station locations, and one record for each hour of data. These data are delimited by at least one space between each element, i.e., the data may be read as free format. The contents of the surface file are as follows:

Year
Month (1 - 12)
Day (1 -31)
Julian day (1 - 366)
Hour (1 - 24)
Sensible heat flux (W m-2)
Surface friction velocity, u* (ms-1)
Convective velocity scale, w* (ms-1)
Vertical potential temperature gradient in the 500 m layer above the planetary boundary layer
Height of the convectively-generated boundary layer (m)
Height of the mechanically-generated boundary layer (m)
Monin-Obukhov length, L (m)
Surface roughness length, z0 (m)
Bowen ratio
Albedo
Wind speed (ms-1) used in the computations
Wind direction (degrees) corresponding to the wind speed above
Height at which the wind above was measured (m)
Temperature (K) used in the computations
Height at which the temperature above was measured (m)
Precipitation code
Precipitation amount (mm)
Relative humidity (%)
Station pressure (mb)
Cloud cover (tenths)
Data source (adjusted [ADJ-] vs. no adjustment [NAD-], 1-minute ASOS [A1], hourly surface observation [SFC], or onsite [OS])

The sensible heat flux, Bowen ratio and albedo are not used by the AERMOD model, but are passed through by AERMET for information purposes only.

**Profile file:** Click on the Browse button to select a profile meteorological data file for use in the model run.

The profile meteorological data file consists of one or more records for each hour of data. As with the surface data file, the data are delimited by at least one space between each element and may be read as Fortran free format. The contents of the profile meteorological data file are as follows:

Year
Month (1 - 12)
Day (1 -31)
Hour (1 - 24)
Measurement height (m)
Top flag = 1, if this is the last (highest) level for this hour, 0, otherwise
Wind direction for the current level (degrees)
Wind speed for the current level (ms-1)
Temperature at the current level (K)
Standard deviation of the wind direction, F2 (degrees)
Standard deviation of the vertical wind speed, Fw (ms-1)

## Surface station

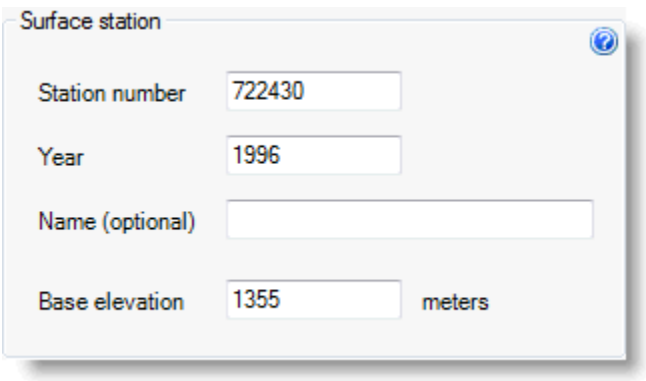


Model Keyword: SURFDATA

**Station number:** Select this field to enter the surface station ID number (e.g., the WBAN number for NWS stations). This information will be read directly from the meteorological data file if it is available. The AERMOD model compares the station number input with the numbers included in the header record of the surface meteorological data file, and issues non-fatal warning messages if there are any mismatches.

**Year:** Select this field to enter the year that meteorological data were collected. If the correct file format is selected, this information will be read directly from the meteorological data file (this year applies to the upper air station as well).

**Name (optional):** You can provide an optional name for the station for informational purposes only.

**Elevation:** Since potential temperature is dependent on the elevation above mean sea level (MSL) you must enter the base elevation of the surface station in meters. The AERMOD model generates a gridded vertical profile of potential temperatures for use in the plume rise calculations. The base elevation should correspond with the base elevation of the primary meteorological tower. The primary tower is usually considered the on-site tower if onsite data is included in the meteorological data. Model Keyword: PROFBASE

## Surface file data period

Displays the period of hourly meteorological data contained in the Surface data file. This field is for informational purposes only and can not be edited. The date format is:

YYYY/MM/DD/HH

where:

YYYY = four digit year
MM = two digit month
DD = two digit day
HH = hour

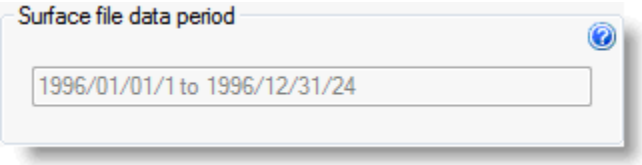


## Upper air station

Model Keyword: UAIRDATA

**Station number:** Select this field to enter the upper station ID number (e.g., the WBAN number for NWS stations). This information will be read directly from the surface meteorological data file if it is available. The AERMOD model compares the station number input with the numbers included in the header record of the surface meteorological data file, and issues non-fatal warning messages if there are any mismatches.

**Year:** Select this field to enter the year that meteorological data were collected. If the correct file format is selected, this information will be read directly from the surface meteorological data file.

**Name (optional):** You can provide an optional name for the upper air station for informational purposes only.

## On-site station

On-site station information is for informational purposes only.

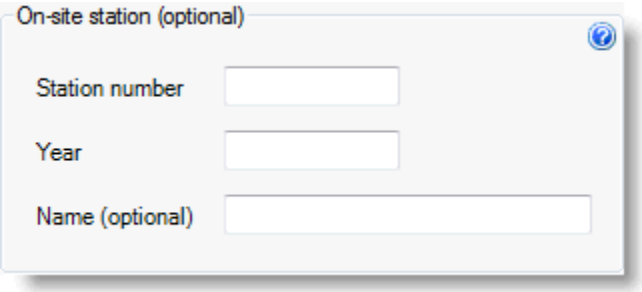

Model Keyword: SITEDATA

**Station number:** Select this field to enter the onsite station ID number. This information needs to be entered in manually as it is not read from the surface meteorological file.

**Year:** Select this field to enter the year that meteorological data were collected. If the correct file format is selected, this information will be read directly from the surface meteorological data file.

**Name (optional):** You can provide an optional name for the on-site meteorological station for informational purposes only.

APPENDIX D-23

SUMMARY OF ACTUAL EMISSIONS FROM INDIVIDUAL EMISSION SOURCES IN BUCKS COUNTY

**Facility Emissions Report**
**Year:** **2015**
**County:** **Bucks**
**Pollutant:** **Carbon Monoxide**

| Primary Facility ID | Primary Facility Name | Tons/Year |
|---|---|---|
| 566437 | FAIRLESS ENERGY LLC/FALLS TWP | 47.23 |
| 257284 | NACEVILLE MATERIALS / CHALFONT | 46.16 |
| 479819 | WHEELABRATOR FALLS INC/FALLS TWP | 43.62 |
| 482698 | WASTE MGMT PA/TULLYTOWN RES REC FAC | 41.55 |
| 276929 | US STEEL CORP/FAIRLESS HILLS | 19.3542 |
| 281862 | MILLER MATERIALS/RUSHLAND QUARRY | 19.29 |
| 516224 | EXELON GENERATION CO/FAIRLESS HILLS GEN STA | 14.9526 |
| 245649 | ROHM & HAAS CO/BRISTOL | 14.3097 |
| 574352 | WALTER R EARLE ASPHALT PLT/MORRISVILLE | 14.1 |
| 281480 | HANSON AGGREGATES/PENNS PARK PLT | 10.1014 |
| 252449 | WASTE MGMT DSPL SVC /GROWS LDFL | 5.811 |
| 260960 | EUREKA STONE QUARRY/CHALFONT QUARRY & ASPHALT PLT | 5.02 |
| 241863 | FRES CO SYS USA INC/TELFORD PLT | 4.39 |
| 544042 | ARKEMA ALTUGLAS/BRISTOL TWP | 3.53 |
| 510902 | ST MARY MED CTR/LANGHORNE | 3.3678 |
| 261989 | EUREKA STONE QUARRY/RUSH VALLEY 1 | 3.3 |
| 915 | BRIGHTSMITH LLC/FALLS TWP | 3.172 |
| 988 | DAN SCHANTZ FARMS/PLUMSTEAD | 2.93 |
| 722 | RJM MFG INC/FAIRLESS HILLS | 2.8 |
| 508 | GREIF PACKAGING LLC/WARMINSTER | 2.74 |
| 488870 | GE BETZ INC/TREVOSE | 2.2347 |
| 637 | NEENAH NORTHEAST LLC/QUAKERTOWN | 2.2103 |
| 238848 | QUAD GRAPHICS MARKETING LLC/CHALFONT | 1.972 |
| 3185 | NORTHEAST FOODS INC/BAKE RITE ROLLS DIV | 1.589 |
| 3119 | G&W PA LAB/SELLERSVILLE | 1.4102 |
| 516225 | KVK TECH/NEWTOWN | 1.0153 |
| 510887 | CLEAN EARTH OF SOUTHEAST PA/MORRISVILLE | 0.8991 |
| 5560 | AVERY DENNISON CORP/QUAKERTOWN | 0.8 |
| 240953 | EXELON GENERATION CO/CROYDON GEN STA | 0.744 |
| 2186 | CLEVELAND STEEL CONTAINER/QUAKERTOWN | 0.7431 |
| 1161 | MRI FLEXIBLE PKG/NEWTOWN | 0.743 |
| 514483 | EXELON GENERATION CO/PENNSBURY POWER PLT | 0.7374 |
| 491700 | EXELON GENERATION CO/FALLS TWP PEAK PWR PLT | 0.7318 |
| 550729 | ORCHARD HILL MEM PARK/ABBEY GLEN | 0.7228 |
| 3184 | CRC IND INC/WARMINSTER | 0.714 |
| 684022 | WASTE MGMT OF PA DOCK FACIL/MORRISVILLE | 0.64 |
| 3188 | WESTROCK PACKAGING INC/BRISTOL | 0.5 |
| 519 | SUPERPAC INC/SOUTHAMPTON | 0.4049 |
| 3165 | RR DONNELLEY / QUAKERTOWN | 0.4 |
| 518604 | TAVO PKG INC/FAIRLESS HILLS | 0.31 |
| 705 | GILES & RANSOME INC/BENSALEM | 0.3 |
| 1170 | OLDCASTLE PRECAST INC/TELFORD | 0.1 |
| 543437 | DRAPER DBS INC/PERKASIE | 0.0951 |
| | | |

**Total Emissions for Selected Records:** **327.7453**
**Total Emissions for Selected Area:** **327.7453**

**Facility Emissions Report**
**Year:** **2014**
**County:** **Bucks**
**Pollutant:** **Carbon Monoxide**

| Primary Facility ID | Primary Facility Name | Tons/Year |
|---|---|---|
| 566437 | FAIRLESS ENERGY LLC/FALLS TWP | 56.06 |
| 257284 | NACEVILLE MATERIALS / CHALFONT | 50.78 |
| 479819 | WHEELABRATOR FALLS INC/FALLS TWP | 47.72 |
| 482698 | WASTE MGMT PA/TULLYTOWN RES REC FAC | 45.15 |
| 276929 | US STEEL CORP/FAIRLESS HILLS | 26.0761 |
| 516224 | EXELON GENERATION CO/FAIRLESS HILLS GEN STA | 14.1796 |
| 245649 | ROHM & HAAS CO/BRISTOL | 14.0219 |
| 281862 | MILLER MATERIALS/RUSHLAND QUARRY | 13.29 |
| 281480 | HANSON AGGREGATES/PENNS PARK PLT | 10.5207 |
| 260960 | EUREKA STONE QUARRY/CHALFONT QUARRY & ASPHALT PLT | 3.8 |
| 574352 | WALTER R EARLE ASPHALT PLT/MORRISVILLE | 3.75 |
| 544042 | ARKEMA ALTUGLAS/BRISTOL TWP | 3.65 |
| 510902 | ST MARY MED CTR/LANGHORNE | 3.4817 |
| 915 | BRIGHTSMITH LLC/FALLS TWP | 3.411 |
| 508 | GREIF PACKAGING LLC/WARMINSTER | 3.01 |
| 514483 | EXELON GENERATION CO/PENNSBURY POWER PLT | 2.9195 |
| 241863 | FRES CO SYS USA INC/TELFORD PLT | 2.9 |
| 252449 | WASTE MGMT DSPL SVC /GROWS LDFL | 2.83 |
| 722 | RJM MFG INC/FAIRLESS HILLS | 2.8 |
| 637 | FIBERMARK NORTH AMERICA INC/QUAKERTOWN | 2.7269 |
| 261989 | EUREKA STONE QUARRY/RUSH VALLEY 1 | 2.29 |
| 238848 | QUAD GRAPHICS MARKETING LLC/CHALFONT | 1.72 |
| 488870 | GE BETZ INC/TREVOSE | 1.6666 |
| 3185 | NORTHEAST FOODS INC/BAKE RITE ROLLS DIV | 1.5958 |
| 516225 | KVK TECH/NEWTOWN | 1.565 |
| 491700 | EXELON GENERATION CO/FALLS TWP PEAK PWR PLT | 1.5635 |
| 3119 | G&W PA LAB/SELLERSVILLE | 1.395 |
| 988 | DAN SCHANTZ FARMS/PLUMSTEAD | 0.824 |
| 2186 | CLEVELAND STEEL CONTAINER/QUAKERTOWN | 0.81 |
| 510887 | CLEAN EARTH OF SOUTHEAST PA/MORRISVILLE | 0.7438 |
| 3184 | CRC IND INC/WARMINSTER | 0.709 |
| 5560 | AVERY DENNISON CORP/QUAKERTOWN | 0.7 |
| 1161 | MRI FLEXIBLE PKG/NEWTOWN | 0.685 |
| 550729 | ORCHARD HILL MEM PARK/ABBEY GLEN | 0.665 |
| 240953 | EXELON GENERATION CO/CROYDON GEN STA | 0.6582 |
| 684022 | WASTE MGMT OF PA DOCK FACIL/MORRISVILLE | 0.64 |
| 519 | SUPERPAC INC/SOUTHAMPTON | 0.4353 |
| 3188 | WESTROCK PACKAGING INC/BRISTOL | 0.4 |
| 3165 | RR DONNELLEY / QUAKERTOWN | 0.4 |
| 705 | GILES & RANSOME INC/BENSALEM | 0.4 |
| 518604 | TAVO PKG INC/FAIRLESS HILLS | 0.24 |
| 1170 | OLDCASTLE PRECAST INC/TELFORD | 0.1 |
| 670380 | KINDER MORGAN BULK TERM INC/FAIRLESS HILLS | 0.04 |
| 543437 | DRAPER DBS INC/PERKASIE | 0.001 |

**Total Emissions for Selected Records:** **333.3246**
**Total Emissions for Selected Area:** **333.3246**

**Facility Emissions Report**
**Year:** **2015**
**County:** **Bucks**
**Pollutant:** **Lead**

| Primary Facility ID | Primary Facility Name | Tons/Year |
|---|---|---|
| 479819 | WHEELABRATOR FALLS INC/FALLS TWP | 0.26 |
| 281480 | HANSON AGGREGATES/PENNS PARK PLT | 0.033 |
| 240953 | EXELON GENERATION CO/CROYDON GEN STA | 0.0032 |
| 281862 | MILLER MATERIALS/RUSHLAND QUARRY | 0.002 |
| 276929 | US STEEL CORP/FAIRLESS HILLS | 0.0001 |
| 519 | SUPERPAC INC/SOUTHAMPTON | 0.0001 |
| | | |

**Total Emissions for Selected Records:** **0.2984**
**Total Emissions for Selected Area:** **0.2984**

**Facility Emissions Report**
**Year:** **2014**
**County:** **Bucks**
**Pollutant:** **Lead**

| Primary Facility ID | Primary Facility Name | Tons/Year |
|---|---|---|
| 281480 | HANSON AGGREGATES/PENNS PARK PLT | 0.0392 |
| 479819 | WHEELABRATOR FALLS INC/FALLS TWP | 0.0189 |
| 240953 | EXELON GENERATION CO/CROYDON GEN STA | 0.0028 |
| 257284 | NACEVILLE MATERIALS / CHALFONT | 0.001 |
| 281862 | MILLER MATERIALS/RUSHLAND QUARRY | 0.001 |
| 491700 | EXELON GENERATION CO/FALLS TWP PEAK PWR PLT | 0.0003 |
| 276929 | US STEEL CORP/FAIRLESS HILLS | 0.0002 |

**Total Emissions for Selected Records:** **0.0634**
**Total Emissions for Selected Area:** **0.0634**

**Facility Emissions Report**
**Year:** **2015**
**County:** **Bucks**
**Pollutant:** **Nitrogen Oxides**

| Primary Facility ID | Primary Facility Name | Tons/Year |
|---|---|---|
| 479819 | WHEELABRATOR FALLS INC/FALLS TWP | 769.56 |
| 566437 | FAIRLESS ENERGY LLC/FALLS TWP | 171.52 |
| 240953 | EXELON GENERATION CO/CROYDON GEN STA | 146.3932 |
| 516224 | EXELON GENERATION CO/FAIRLESS HILLS GEN STA | 118.8 |
| 276929 | US STEEL CORP/FAIRLESS HILLS | 50.9376 |
| 281862 | MILLER MATERIALS/RUSHLAND QUARRY | 11.86 |
| 510887 | CLEAN EARTH OF SOUTHEAST PA/MORRISVILLE | 9.3038 |
| 574352 | WALTER R EARLE ASPHALT PLT/MORRISVILLE | 8.24 |
| 482698 | WASTE MGMT PA/TULLYTOWN RES REC FAC | 8.01 |
| 252449 | WASTE MGMT DSPL SVC /GROWS LDFL | 7.73 |
| 491700 | EXELON GENERATION CO/FALLS TWP PEAK PWR PLT | 6.5047 |
| 281480 | HANSON AGGREGATES/PENNS PARK PLT | 6.2313 |
| 988 | DAN SCHANTZ FARMS/PLUMSTEAD | 6.195 |
| 257284 | NACEVILLE MATERIALS / CHALFONT | 6 |
| 3119 | G&W PA LAB/SELLERSVILLE | 5.5081 |
| 915 | BRIGHTSMITH LLC/FALLS TWP | 5.382 |
| 241863 | FRES CO SYS USA INC/TELFORD PLT | 5.23 |
| 245649 | ROHM & HAAS CO/BRISTOL | 5.0782 |
| 510902 | ST MARY MED CTR/LANGHORNE | 5.0177 |
| 261989 | EUREKA STONE QUARRY/RUSH VALLEY 1 | 4.95 |
| 544042 | ARKEMA ALTUGLAS/BRISTOL TWP | 3.5 |
| 260960 | EUREKA STONE QUARRY/CHALFONT QUARRY & ASPHALT P | 3.46 |
| 508 | GREIF PACKAGING LLC/WARMINSTER | 3.45 |
| 488870 | GE BETZ INC/TREVOSE | 3.2657 |
| 684022 | WASTE MGMT OF PA DOCK FACIL/MORRISVILLE | 2.96 |
| 637 | NEENAH NORTHEAST LLC/QUAKERTOWN | 2.7308 |
| 3185 | NORTHEAST FOODS INC/BAKE RITE ROLLS DIV | 2.6482 |
| 238848 | QUAD GRAPHICS MARKETING LLC/CHALFONT | 2.312 |
| 550729 | ORCHARD HILL MEM PARK/ABBEY GLEN | 1.9688 |
| 5560 | AVERY DENNISON CORP/QUAKERTOWN | 1.4 |
| 524625 | DUNMORE CORP/BRISTOL | 1.36 |
| 516225 | KVK TECH/NEWTOWN | 1.3322 |
| 2186 | CLEVELAND STEEL CONTAINER/QUAKERTOWN | 0.9141 |
| 1161 | MRI FLEXIBLE PKG/NEWTOWN | 0.884 |
| 514483 | EXELON GENERATION CO/PENNSBURY POWER PLT | 0.8126 |
| 519 | SUPERPAC INC/SOUTHAMPTON | 0.733 |
| 3188 | WESTROCK PACKAGING INC/BRISTOL | 0.6 |
| 3165 | RR DONNELLEY / QUAKERTOWN | 0.48 |
| 518604 | TAVO PKG INC/FAIRLESS HILLS | 0.41 |
| 3184 | CRC IND INC/WARMINSTER | 0.319 |
| 1170 | OLDCASTLE PRECAST INC/TELFORD | 0.2 |
| 670380 | KINDER MORGAN BULK TERM INC/FAIRLESS HILLS | 0.2 |
| 543437 | DRAPER DBS INC/PERKASIE | 0.1649 |
| 510078 | BOEKEL IND INC/FEASTERVILLE | 0.159 |
| 705 | GILES & RANSOME INC/BENSALEM | 0.08 |
| 559689 | MCADOO & ALLEN/QUAKER COLOR DIV | 0.0363 |

**Total Emissions for Selected Records:** **1394.832**
**Total Emissions for Selected Area:** **1394.832**

**Facility Emissions Report**
**Year:** **2014**
**County:** **Bucks**
**Pollutant:** **Nitrogen Oxides**

| Primary Facility ID | Primary Facility Name | Tons/Year |
|---|---|---|
| 479819 | WHEELABRATOR FALLS INC/FALLS TWP | 792.81 |
| 566437 | FAIRLESS ENERGY LLC/FALLS TWP | 193.71 |
| 240953 | EXELON GENERATION CO/CROYDON GEN STA | 130.4212 |
| 516224 | EXELON GENERATION CO/FAIRLESS HILLS GEN STA | 74.4 |
| 276929 | US STEEL CORP/FAIRLESS HILLS | 67.3617 |
| 482698 | WASTE MGMT PA/TULLYTOWN RES REC FAC | 11.69 |
| 491700 | EXELON GENERATION CO/FALLS TWP PEAK PWR PLT | 11.3883 |
| 281862 | MILLER MATERIALS/RUSHLAND QUARRY | 8.17 |
| 510887 | CLEAN EARTH OF SOUTHEAST PA/MORRISVILLE | 7.108 |
| 257284 | NACEVILLE MATERIALS / CHALFONT | 6.592 |
| 510902 | ST MARY MED CTR/LANGHORNE | 5.987 |
| 3119 | G&W PA LAB/SELLERSVILLE | 5.9527 |
| 915 | BRIGHTSMITH LLC/FALLS TWP | 5.806 |
| 245649 | ROHM & HAAS CO/BRISTOL | 4.8304 |
| 514483 | EXELON GENERATION CO/PENNSBURY POWER PLT | 4.5666 |
| 281480 | HANSON AGGREGATES/PENNS PARK PLT | 4.5497 |
| 544042 | ARKEMA ALTUGLAS/BRISTOL TWP | 3.8 |
| 252449 | WASTE MGMT DSPL SVC /GROWS LDFL | 3.8 |
| 508 | GREIF PACKAGING LLC/WARMINSTER | 3.76 |
| 241863 | FRES CO SYS USA INC/TELFORD PLT | 3.6 |
| 261989 | EUREKA STONE QUARRY/RUSH VALLEY 1 | 3.52 |
| 637 | FIBERMARK NORTH AMERICA INC/QUAKERTOWN | 3.4438 |
| 988 | DAN SCHANTZ FARMS/PLUMSTEAD | 3.294 |
| 684022 | WASTE MGMT OF PA DOCK FACIL/MORRISVILLE | 2.96 |
| 574352 | WALTER R EARLE ASPHALT PLT/MORRISVILLE | 2.89 |
| 3185 | NORTHEAST FOODS INC/BAKE RITE ROLLS DIV | 2.6597 |
| 488870 | GE BETZ INC/TREVOSE | 2.5278 |
| 238848 | QUAD GRAPHICS MARKETING LLC/CHALFONT | 2.42 |
| 5560 | AVERY DENNISON CORP/QUAKERTOWN | 2.4 |
| 260960 | EUREKA STONE QUARRY/CHALFONT QUARRY & ASPHALT P | 2.17 |
| 550729 | ORCHARD HILL MEM PARK/ABBEY GLEN | 1.748 |
| 516225 | KVK TECH/NEWTOWN | 1.3189 |
| 519 | SUPERPAC INC/SOUTHAMPTON | 1.0955 |
| 524625 | DUNMORE CORP/BRISTOL | 0.983 |
| 2186 | CLEVELAND STEEL CONTAINER/QUAKERTOWN | 0.97 |
| 1161 | MRI FLEXIBLE PKG/NEWTOWN | 0.816 |
| 3165 | RR DONNELLEY / QUAKERTOWN | 0.48 |
| 3188 | WESTROCK PACKAGING INC/BRISTOL | 0.48 |
| 3184 | CRC IND INC/WARMINSTER | 0.335 |
| 518604 | TAVO PKG INC/FAIRLESS HILLS | 0.33 |
| 1170 | OLDCASTLE PRECAST INC/TELFORD | 0.2 |
| 670380 | KINDER MORGAN BULK TERM INC/FAIRLESS HILLS | 0.18 |
| 510078 | BOEKEL IND INC/FEASTERVILLE | 0.174 |
| 559689 | MCADOO & ALLEN/QUAKER COLOR DIV | 0.0817 |
| 705 | GILES & RANSOME INC/BENSALEM | 0.08 |
| 543437 | DRAPER DBS INC/PERKASIE | 0.007 |

**Total Emissions for Selected Records:** **1387.868**
**Total Emissions for Selected Area:** **1387.868**

**Facility Emissions Report**
**Year:** **2015**
**County:** **Bucks**
**Pollutant:** **Particulate Matter < 2.5 Microns**

| Primary Facility ID | Primary Facility Name | Tons/Year |
|---|---|---|
| 482698 | WASTE MGMT PA/TULLYTOWN RES REC FAC | 29.68 |
| 479819 | WHEELABRATOR FALLS INC/FALLS TWP | 27.61 |
| 566437 | FAIRLESS ENERGY LLC/FALLS TWP | 20.58 |
| 281862 | MILLER MATERIALS/RUSHLAND QUARRY | 9.304 |
| 670380 | KINDER MORGAN BULK TERM INC/FAIRLESS HILLS | 7.6785 |
| 252449 | WASTE MGMT DSPL SVC /GROWS LDFL | 7.27 |
| 684022 | WASTE MGMT OF PA DOCK FACIL/MORRISVILLE | 4.1 |
| 574352 | WALTER R EARLE ASPHALT PLT/MORRISVILLE | 2.72 |
| 550729 | ORCHARD HILL MEM PARK/ABBEY GLEN | 2.3091 |
| 276929 | US STEEL CORP/FAIRLESS HILLS | 1.7511 |
| 1170 | OLDCASTLE PRECAST INC/TELFORD | 1.5 |
| 281480 | HANSON AGGREGATES/PENNS PARK PLT | 1.418 |
| 260960 | EUREKA STONE QUARRY/CHALFONT QUARRY & ASPHAL | 1.3348 |
| 544042 | ARKEMA ALTUGLAS/BRISTOL TWP | 1.22 |
| 257284 | NACEVILLE MATERIALS / CHALFONT | 0.96 |
| 240953 | EXELON GENERATION CO/CROYDON GEN STA | 0.8725 |
| 516224 | EXELON GENERATION CO/FAIRLESS HILLS GEN STA | 0.6688 |
| 508 | GREIF PACKAGING LLC/WARMINSTER | 0.6 |
| 261989 | EUREKA STONE QUARRY/RUSH VALLEY 1 | 0.5785 |
| 516225 | KVK TECH/NEWTOWN | 0.2816 |
| 488870 | GE BETZ INC/TREVOSE | 0.2642 |
| 637 | NEENAH NORTHEAST LLC/QUAKERTOWN | 0.1883 |
| 238848 | QUAD GRAPHICS MARKETING LLC/CHALFONT | 0.1842 |
| 514483 | EXELON GENERATION CO/PENNSBURY POWER PLT | 0.1625 |
| 241863 | FRES CO SYS USA INC/TELFORD PLT | 0.13 |
| 510902 | ST MARY MED CTR/LANGHORNE | 0.1225 |
| 5560 | AVERY DENNISON CORP/QUAKERTOWN | 0.1 |
| 1161 | MRI FLEXIBLE PKG/NEWTOWN | 0.067 |
| 3119 | G&W PA LAB/SELLERSVILLE | 0.065 |
| 3184 | CRC IND INC/WARMINSTER | 0.064 |
| 2186 | CLEVELAND STEEL CONTAINER/QUAKERTOWN | 0.0574 |
| 3185 | NORTHEAST FOODS INC/BAKE RITE ROLLS DIV | 0.0359 |
| 491700 | EXELON GENERATION CO/FALLS TWP PEAK PWR PLT | 0.0318 |
| 518604 | TAVO PKG INC/FAIRLESS HILLS | 0.03 |
| 647346 | LIBERTY COATING CO LLC/MORRISVILLE | 0.01 |
| 519 | SUPERPAC INC/SOUTHAMPTON | 0.0092 |
| 245649 | ROHM & HAAS CO/BRISTOL | 0.0086 |
| 543437 | DRAPER DBS INC/PERKASIE | 0.0025 |

**Total Emissions for Selected Records:** **123.97**
**Total Emissions for Selected Area:** **123.97**

**Facility Emissions Report**
**Year:** **2014**
**County:** **Bucks**
**Pollutant:** **Particulate Matter < 2.5 Microns**

| Primary Facility ID | Primary Facility Name | Tons/Year |
|---|---|---|
| 482698 | WASTE MGMT PA/TULLYTOWN RES REC FAC | 26.57 |
| 479819 | WHEELABRATOR FALLS INC/FALLS TWP | 23.54 |
| 566437 | FAIRLESS ENERGY LLC/FALLS TWP | 23.5 |
| 670380 | KINDER MORGAN BULK TERM INC/FAIRLESS HILLS | 13.8526 |
| 281862 | MILLER MATERIALS/RUSHLAND QUARRY | 8.118 |
| 252449 | WASTE MGMT DSPL SVC /GROWS LDFL | 7.16 |
| 684022 | WASTE MGMT OF PA DOCK FACIL/MORRISVILLE | 3.17 |
| 550729 | ORCHARD HILL MEM PARK/ABBEY GLEN | 2.5442 |
| 276929 | US STEEL CORP/FAIRLESS HILLS | 2.3593 |
| 1170 | OLDCASTLE PRECAST INC/TELFORD | 1.7 |
| 281480 | HANSON AGGREGATES/PENNS PARK PLT | 1.597 |
| 574352 | WALTER R EARLE ASPHALT PLT/MORRISVILLE | 1.55 |
| 544042 | ARKEMA ALTUGLAS/BRISTOL TWP | 1.25 |
| 260960 | EUREKA STONE QUARRY/CHALFONT QUARRY & ASPHAI | 1.0542 |
| 257284 | NACEVILLE MATERIALS / CHALFONT | 1.052 |
| 240953 | EXELON GENERATION CO/CROYDON GEN STA | 0.7719 |
| 514483 | EXELON GENERATION CO/PENNSBURY POWER PLT | 0.6648 |
| 516224 | EXELON GENERATION CO/FAIRLESS HILLS GEN STA | 0.6149 |
| 508 | GREIF PACKAGING LLC/WARMINSTER | 0.44 |
| 261989 | EUREKA STONE QUARRY/RUSH VALLEY 1 | 0.4127 |
| 637 | FIBERMARK NORTH AMERICA INC/QUAKERTOWN | 0.247 |
| 488870 | GE BETZ INC/TREVOSE | 0.1841 |
| 238848 | QUAD GRAPHICS MARKETING LLC/CHALFONT | 0.16 |
| 516225 | KVK TECH/NEWTOWN | 0.1372 |
| 5560 | AVERY DENNISON CORP/QUAKERTOWN | 0.1 |
| 2186 | CLEVELAND STEEL CONTAINER/QUAKERTOWN | 0.07 |
| 3119 | G&W PA LAB/SELLERSVILLE | 0.0697 |
| 491700 | EXELON GENERATION CO/FALLS TWP PEAK PWR PLT | 0.068 |
| 3184 | CRC IND INC/WARMINSTER | 0.063 |
| 1161 | MRI FLEXIBLE PKG/NEWTOWN | 0.062 |
| 3185 | NORTHEAST FOODS INC/BAKE RITE ROLLS DIV | 0.0361 |
| 647346 | LIBERTY COATING CO LLC/MORRISVILLE | 0.02 |
| 519 | SUPERPAC INC/SOUTHAMPTON | 0.0103 |
| 245649 | ROHM & HAAS CO/BRISTOL | 0.01 |
| 543437 | DRAPER DBS INC/PERKASIE | 0.0064 |

**Total Emissions for Selected Records:** **123.1654**
**Total Emissions for Selected Area:** **123.1654**

**Facility Emissions Report**
**Year:** **2015**
**County:** **Bucks**
**Pollutant:** **Particulate Matter < 10 Microns**

| Primary Facility ID | Primary Facility Name | Tons/Year |
|---|---|---|
| 479819 | WHEELABRATOR FALLS INC/FALLS TWP | 41.33 |
| 482698 | WASTE MGMT PA/TULLYTOWN RES REC FAC | 32.78 |
| 670380 | KINDER MORGAN BULK TERM INC/FAIRLESS HILLS | 24.8072 |
| 566437 | FAIRLESS ENERGY LLC/FALLS TWP | 20.58 |
| 684022 | WASTE MGMT OF PA DOCK FACIL/MORRISVILLE | 12.51 |
| 281862 | MILLER MATERIALS/RUSHLAND QUARRY | 10.345 |
| 252449 | WASTE MGMT DSPL SVC /GROWS LDFL | 8.67 |
| 240953 | EXELON GENERATION CO/CROYDON GEN STA | 5.6815 |
| 260960 | EUREKA STONE QUARRY/CHALFONT QUARRY & ASPHAL | 3.9959 |
| 281480 | HANSON AGGREGATES/PENNS PARK PLT | 3.6946 |
| 988 | DAN SCHANTZ FARMS/PLUMSTEAD | 3.173 |
| 257284 | NACEVILLE MATERIALS / CHALFONT | 3.12 |
| 574352 | WALTER R EARLE ASPHALT PLT/MORRISVILLE | 2.72 |
| 544042 | ARKEMA ALTUGLAS/BRISTOL TWP | 2.7 |
| 550729 | ORCHARD HILL MEM PARK/ABBEY GLEN | 2.3091 |
| 276929 | US STEEL CORP/FAIRLESS HILLS | 1.7511 |
| 1170 | OLDCASTLE PRECAST INC/TELFORD | 1.5 |
| 261989 | EUREKA STONE QUARRY/RUSH VALLEY 1 | 1.4226 |
| 510887 | CLEAN EARTH OF SOUTHEAST PA/MORRISVILLE | 1.1559 |
| 3119 | G&W PA LAB/SELLERSVILLE | 1.0702 |
| 245649 | ROHM & HAAS CO/BRISTOL | 0.852 |
| 516224 | EXELON GENERATION CO/FAIRLESS HILLS GEN STA | 0.6688 |
| 508 | GREIF PACKAGING LLC/WARMINSTER | 0.6 |
| 491700 | EXELON GENERATION CO/FALLS TWP PEAK PWR PLT | 0.3017 |
| 915 | BRIGHTSMITH LLC/FALLS TWP | 0.29 |
| 516225 | KVK TECH/NEWTOWN | 0.2816 |
| 488870 | GE BETZ INC/TREVOSE | 0.2642 |
| 722 | RJM MFG INC/FAIRLESS HILLS | 0.25 |
| 637 | NEENAH NORTHEAST LLC/QUAKERTOWN | 0.1883 |
| 238848 | QUAD GRAPHICS MARKETING LLC/CHALFONT | 0.1842 |
| 514483 | EXELON GENERATION CO/PENNSBURY POWER PLT | 0.1625 |
| 241863 | FRES CO SYS USA INC/TELFORD PLT | 0.16 |
| 510902 | ST MARY MED CTR/LANGHORNE | 0.1383 |
| 3185 | NORTHEAST FOODS INC/BAKE RITE ROLLS DIV | 0.1078 |
| 5560 | AVERY DENNISON CORP/QUAKERTOWN | 0.1 |
| 1161 | MRI FLEXIBLE PKG/NEWTOWN | 0.067 |
| 3184 | CRC IND INC/WARMINSTER | 0.064 |
| 2186 | CLEVELAND STEEL CONTAINER/QUAKERTOWN | 0.0574 |
| 519 | SUPERPAC INC/SOUTHAMPTON | 0.0366 |
| 518604 | TAVO PKG INC/FAIRLESS HILLS | 0.03 |
| 647346 | LIBERTY COATING CO LLC/MORRISVILLE | 0.01 |
| 3188 | WESTROCK PACKAGING INC/BRISTOL | 0.0074 |
| 543437 | DRAPER DBS INC/PERKASIE | 0.0025 |

**Total Emissions for Selected Records:** **190.1404**
**Total Emissions for Selected Area:** **190.1404**

**Facility Emissions Report**
**Year:** **2014**
**County:** **Bucks**
**Pollutant:** **Particulate Matter < 10 Microns**

| Primary Facility ID | Primary Facility Name | Tons/Year |
|---|---|---|
| 479819 | WHEELABRATOR FALLS INC/FALLS TWP | 37.43 |
| 482698 | WASTE MGMT PA/TULLYTOWN RES REC FAC | 28.6 |
| 566437 | FAIRLESS ENERGY LLC/FALLS TWP | 23.5 |
| 670380 | KINDER MORGAN BULK TERM INC/FAIRLESS HILLS | 20.2149 |
| 281862 | MILLER MATERIALS/RUSHLAND QUARRY | 11.37 |
| 684022 | WASTE MGMT OF PA DOCK FACIL/MORRISVILLE | 9.26 |
| 252449 | WASTE MGMT DSPL SVC /GROWS LDFL | 8.4 |
| 240953 | EXELON GENERATION CO/CROYDON GEN STA | 5.0265 |
| 257284 | NACEVILLE MATERIALS / CHALFONT | 3.426 |
| 281480 | HANSON AGGREGATES/PENNS PARK PLT | 3.3215 |
| 544042 | ARKEMA ALTUGLAS/BRISTOL TWP | 3 |
| 260960 | EUREKA STONE QUARRY/CHALFONT QUARRY & ASPHALT | 2.9132 |
| 550729 | ORCHARD HILL MEM PARK/ABBEY GLEN | 2.5442 |
| 276929 | US STEEL CORP/FAIRLESS HILLS | 2.3593 |
| 261989 | EUREKA STONE QUARRY/RUSH VALLEY 1 | 2.3228 |
| 574352 | WALTER R EARLE ASPHALT PLT/MORRISVILLE | 2.04 |
| 1170 | OLDCASTLE PRECAST INC/TELFORD | 1.7 |
| 510887 | CLEAN EARTH OF SOUTHEAST PA/MORRISVILLE | 1.2935 |
| 245649 | ROHM & HAAS CO/BRISTOL | 0.8513 |
| 514483 | EXELON GENERATION CO/PENNSBURY POWER PLT | 0.6648 |
| 491700 | EXELON GENERATION CO/FALLS TWP PEAK PWR PLT | 0.6447 |
| 516224 | EXELON GENERATION CO/FAIRLESS HILLS GEN STA | 0.6149 |
| 508 | GREIF PACKAGING LLC/WARMINSTER | 0.45 |
| 988 | DAN SCHANTZ FARMS/PLUMSTEAD | 0.351 |
| 915 | BRIGHTSMITH LLC/FALLS TWP | 0.314 |
| 3119 | G&W PA LAB/SELLERSVILLE | 0.287 |
| 637 | FIBERMARK NORTH AMERICA INC/QUAKERTOWN | 0.2525 |
| 722 | RJM MFG INC/FAIRLESS HILLS | 0.25 |
| 488870 | GE BETZ INC/TREVOSE | 0.1841 |
| 238848 | QUAD GRAPHICS MARKETING LLC/CHALFONT | 0.16 |
| 516225 | KVK TECH/NEWTOWN | 0.1476 |
| 510902 | ST MARY MED CTR/LANGHORNE | 0.1413 |
| 3185 | NORTHEAST FOODS INC/BAKE RITE ROLLS DIV | 0.1083 |
| 5560 | AVERY DENNISON CORP/QUAKERTOWN | 0.1 |
| 241863 | FRES CO SYS USA INC/TELFORD PLT | 0.1 |
| 2186 | CLEVELAND STEEL CONTAINER/QUAKERTOWN | 0.07 |
| 3184 | CRC IND INC/WARMINSTER | 0.063 |
| 1161 | MRI FLEXIBLE PKG/NEWTOWN | 0.062 |
| 519 | SUPERPAC INC/SOUTHAMPTON | 0.0394 |
| 647346 | LIBERTY COATING CO LLC/MORRISVILLE | 0.02 |
| 543437 | DRAPER DBS INC/PERKASIE | 0.0064 |
| 3188 | WESTROCK PACKAGING INC/BRISTOL | 0.006 |

**Total Emissions for Selected Records:** **174.6102**
**Total Emissions for Selected Area:** **174.6102**

**Facility Emissions Report**
**Year:** **2015**
**County:** **Bucks**
**Pollutant:** **Sulfur Oxides**

| Primary Facility ID | Primary Facility Name | Tons/Year |
|---|---|---|
| 516224 | EXELON GENERATION CO/FAIRLESS HILLS GEN STA | 86.1447 |
| 479819 | WHEELABRATOR FALLS INC/FALLS TWP | 69.47 |
| 566437 | FAIRLESS ENERGY LLC/FALLS TWP | 15.33 |
| 281862 | MILLER MATERIALS/RUSHLAND QUARRY | 14.89 |
| 252449 | WASTE MGMT DSPL SVC /GROWS LDFL | 8.88 |
| 510887 | CLEAN EARTH OF SOUTHEAST PA/MORRISVILLE | 8.6102 |
| 240953 | EXELON GENERATION CO/CROYDON GEN STA | 8.4178 |
| 3119 | G&W PA LAB/SELLERSVILLE | 7.4901 |
| 257284 | NACEVILLE MATERIALS / CHALFONT | 6.92 |
| 482698 | WASTE MGMT PA/TULLYTOWN RES REC FAC | 2.66 |
| 261989 | EUREKA STONE QUARRY/RUSH VALLEY 1 | 2.35 |
| 988 | DAN SCHANTZ FARMS/PLUMSTEAD | 1.5365 |
| 550729 | ORCHARD HILL MEM PARK/ABBEY GLEN | 1.3197 |
| 245649 | ROHM & HAAS CO/BRISTOL | 1.2279 |
| 281480 | HANSON AGGREGATES/PENNS PARK PLT | 0.7445 |
| 491700 | EXELON GENERATION CO/FALLS TWP PEAK PWR PLT | 0.6227 |
| 260960 | EUREKA STONE QUARRY/CHALFONT QUARRY & ASPHA | 0.57 |
| 510902 | ST MARY MED CTR/LANGHORNE | 0.4396 |
| 574352 | WALTER R EARLE ASPHALT PLT/MORRISVILLE | 0.262 |
| 684022 | WASTE MGMT OF PA DOCK FACIL/MORRISVILLE | 0.2 |
| 514483 | EXELON GENERATION CO/PENNSBURY POWER PLT | 0.1913 |
| 276929 | US STEEL CORP/FAIRLESS HILLS | 0.1382 |
| 488870 | GE BETZ INC/TREVOSE | 0.0459 |
| 241863 | FRES CO SYS USA INC/TELFORD PLT | 0.031 |
| 544042 | ARKEMA ALTUGLAS/BRISTOL TWP | 0.025 |
| 516225 | KVK TECH/NEWTOWN | 0.0249 |
| 915 | BRIGHTSMITH LLC/FALLS TWP | 0.023 |
| 508 | GREIF PACKAGING LLC/WARMINSTER | 0.02 |
| 637 | NEENAH NORTHEAST LLC/QUAKERTOWN | 0.0163 |
| 543437 | DRAPER DBS INC/PERKASIE | 0.0156 |
| 722 | RJM MFG INC/FAIRLESS HILLS | 0.015 |
| 3185 | NORTHEAST FOODS INC/BAKE RITE ROLLS DIV | 0.0113 |
| 238848 | QUAD GRAPHICS MARKETING LLC/CHALFONT | 0.0113 |
| 2186 | CLEVELAND STEEL CONTAINER/QUAKERTOWN | 0.0053 |
| 519 | SUPERPAC INC/SOUTHAMPTON | 0.0053 |
| 1161 | MRI FLEXIBLE PKG/NEWTOWN | 0.005 |
| 3184 | CRC IND INC/WARMINSTER | 0.005 |
| 3188 | WESTROCK PACKAGING INC/BRISTOL | 0.0015 |
| | | |

**Total Emissions for Selected Records: 236.6766**

**Total Emissions for Selected Area: 238.6766**

**Facility Emissions Report**
**Year:** **2014**
**County:** **Bucks**
**Pollutant:** **Sulfur Oxides**

| Primary Facility ID | Primary Facility Name | Tons/Year |
|---|---|---|
| 479819 | WHEELABRATOR FALLS INC/FALLS TWP | 90.02 |
| 516224 | EXELON GENERATION CO/FAIRLESS HILLS GEN STA | 77.8067 |
| 566437 | FAIRLESS ENERGY LLC/FALLS TWP | 15.34 |
| 240953 | EXELON GENERATION CO/CROYDON GEN STA | 14.6172 |
| 281862 | MILLER MATERIALS/RUSHLAND QUARRY | 10.26 |
| 3119 | G&W PA LAB/SELLERSVILLE | 8.059 |
| 257284 | NACEVILLE MATERIALS / CHALFONT | 7.62 |
| 510887 | CLEAN EARTH OF SOUTHEAST PA/MORRISVILLE | 5.32 |
| 252449 | WASTE MGMT DSPL SVC /GROWS LDFL | 5.03 |
| 482698 | WASTE MGMT PA/TULLYTOWN RES REC FAC | 2.48 |
| 261989 | EUREKA STONE QUARRY/RUSH VALLEY 1 | 2.4 |
| 491700 | EXELON GENERATION CO/FALLS TWP PEAK PWR PLT | 1.868 |
| 245649 | ROHM & HAAS CO/BRISTOL | 1.2752 |
| 550729 | ORCHARD HILL MEM PARK/ABBEY GLEN | 1.2403 |
| 281480 | HANSON AGGREGATES/PENNS PARK PLT | 0.8353 |
| 514483 | EXELON GENERATION CO/PENNSBURY POWER PLT | 0.7715 |
| 260960 | EUREKA STONE QUARRY/CHALFONT QUARRY & ASPH/ | 0.4 |
| 510902 | ST MARY MED CTR/LANGHORNE | 0.3342 |
| 544042 | ARKEMA ALTUGLAS/BRISTOL TWP | 0.29 |
| 241863 | FRES CO SYS USA INC/TELFORD PLT | 0.2 |
| 684022 | WASTE MGMT OF PA DOCK FACIL/MORRISVILLE | 0.2 |
| 988 | DAN SCHANTZ FARMS/PLUMSTEAD | 0.195 |
| 276929 | US STEEL CORP/FAIRLESS HILLS | 0.1863 |
| 915 | BRIGHTSMITH LLC/FALLS TWP | 0.051 |
| 488870 | GE BETZ INC/TREVOSE | 0.0489 |
| 670380 | KINDER MORGAN BULK TERM INC/FAIRLESS HILLS | 0.03 |
| 637 | FIBERMARK NORTH AMERICA INC/QUAKERTOWN | 0.0215 |
| 508 | GREIF PACKAGING LLC/WARMINSTER | 0.02 |
| 516225 | KVK TECH/NEWTOWN | 0.019 |
| 722 | RJM MFG INC/FAIRLESS HILLS | 0.015 |
| 3185 | NORTHEAST FOODS INC/BAKE RITE ROLLS DIV | 0.0114 |
| 2186 | CLEVELAND STEEL CONTAINER/QUAKERTOWN | 0.01 |
| 574352 | WALTER R EARLE ASPHALT PLT/MORRISVILLE | 0.01 |
| 1161 | MRI FLEXIBLE PKG/NEWTOWN | 0.005 |
| 3184 | CRC IND INC/WARMINSTER | 0.005 |
| 519 | SUPERPAC INC/SOUTHAMPTON | 0.0047 |
| 3188 | WESTROCK PACKAGING INC/BRISTOL | 0.0012 |
| 543437 | DRAPER DBS INC/PERKASIE | 0.0003 |

**Total Emissions for Selected Records: 247.0017**
**Total Emissions for Selected Area: 247.0017**

**Facility Emissions Report**
**Year:** **2015**
**County:** **Bucks**
**Pollutant:** **Volatile Organic Compounds**

| Primary Facility ID | Primary Facility Name | Tons/Year |
|---|---|---|
| 241863 | FRES CO SYS USA INC/TELFORD PLT | 53.283 |
| 566437 | FAIRLESS ENERGY LLC/FALLS TWP | 38.23 |
| 3185 | NORTHEAST FOODS INC/BAKE RITE ROLLS DIV | 29.5452 |
| 238848 | QUAD GRAPHICS MARKETING LLC/CHALFONT | 25.02 |
| 482698 | WASTE MGMT PA/TULLYTOWN RES REC FAC | 24.86 |
| 544042 | ARKEMA ALTUGLAS/BRISTOL TWP | 24.8 |
| 252449 | WASTE MGMT DSPL SVC /GROWS LDFL | 19.89 |
| 519 | SUPERPAC INC/SOUTHAMPTON | 18.5938 |
| 3184 | CRC IND INC/WARMINSTER | 15.588 |
| 508 | GREIF PACKAGING LLC/WARMINSTER | 13.54 |
| 3165 | RR DONNELLEY / QUAKERTOWN | 12.52 |
| 647346 | LIBERTY COATING CO LLC/MORRISVILLE | 12.3 |
| 509 | OLIVER-TOLAS HEALTHCARE PKG/FEASTERVILLE | 11.8 |
| 559689 | MCADOO & ALLEN/QUAKER COLOR DIV | 11.78 |
| 281862 | MILLER MATERIALS/RUSHLAND QUARRY | 7.98 |
| 491697 | NORTHTEC LLC/BRISTOL | 7.8 |
| 5560 | AVERY DENNISON CORP/QUAKERTOWN | 7.2 |
| 637 | NEENAH NORTHEAST LLC/QUAKERTOWN | 6.7946 |
| 524625 | DUNMORE CORP/BRISTOL | 6.3 |
| 543437 | DRAPER DBS INC/PERKASIE | 5.9563 |
| 1161 | MRI FLEXIBLE PKG/NEWTOWN | 5.709 |
| 245649 | ROHM & HAAS CO/BRISTOL | 5.5923 |
| 608 | BRACALENTE MFG CO INC/TRUMBAUERSVILLE | 4.84 |
| 523906 | SUPERIOR WOODCRAFT/DOYLESTOWN PLT | 4.73 |
| 518604 | TAVO PKG INC/FAIRLESS HILLS | 4.31 |
| 722 | RJM MFG INC/FAIRLESS HILLS | 3.88 |
| 1170 | OLDCASTLE PRECAST INC/TELFORD | 3.8 |
| 705 | GILES & RANSOME INC/BENSALEM | 3.77 |
| 2186 | CLEVELAND STEEL CONTAINER/QUAKERTOWN | 3.6659 |
| 276929 | US STEEL CORP/FAIRLESS HILLS | 3.4638 |
| 261989 | EUREKA STONE QUARRY/RUSH VALLEY 1 | 3.17 |
| 281480 | HANSON AGGREGATES/PENNS PARK PLT | 3.0367 |
| 574352 | WALTER R EARLE ASPHALT PLT/MORRISVILLE | 2.45 |
| 257284 | NACEVILLE MATERIALS / CHALFONT | 2.31 |
| 915 | BRIGHTSMITH LLC/FALLS TWP | 2.299 |
| 3188 | WESTROCK PACKAGING INC/BRISTOL | 2.0169 |
| 3119 | G&W PA LAB/SELLERSVILLE | 1.5956 |
| 479819 | WHEELABRATOR FALLS INC/FALLS TWP | 1.47 |
| 516225 | KVK TECH/NEWTOWN | 1.4003 |
| 260960 | EUREKA STONE QUARRY/CHALFONT QUARRY & ASPI | 1.02 |
| 684022 | WASTE MGMT OF PA DOCK FACIL/MORRISVILLE | 0.86 |
| 510078 | BOEKEL IND INC/FEASTERVILLE | 0.6475 |
| 510887 | CLEAN EARTH OF SOUTHEAST PA/MORRISVILLE | 0.5554 |
| 550729 | ORCHARD HILL MEM PARK/ABBEY GLEN | 0.4736 |
| 988 | DAN SCHANTZ FARMS/PLUMSTEAD | 0.3113 |
| 510902 | ST MARY MED CTR/LANGHORNE | 0.2333 |
| 488870 | GE BETZ INC/TREVOSE | 0.1902 |
| 516224 | EXELON GENERATION CO/FAIRLESS HILLS GEN STA | 0.1594 |
| 670380 | KINDER MORGAN BULK TERM INC/FAIRLESS HILLS | 0.1 |
| 240953 | EXELON GENERATION CO/CROYDON GEN STA | 0.0924 |
| 514483 | EXELON GENERATION CO/PENNSBURY POWER PLT | 0.0615 |
| 491700 | EXELON GENERATION CO/FALLS TWP PEAK PWR PLT | 0.0247 |

**Total Emissions for Selected Records:** **422.0197**
**Total Emissions for Selected Area:** **422.0197**

**Facility Emissions Report**
**Year:** **2014**
**County:** **Bucks**
**Pollutant:** **Volatile Organic Compounds**

| Primary Facility ID | Primary Facility Name | Tons/Year |
|---|---|---|
| 241863 | FRES CO SYS USA INC/TELFORD PLT | 54.8 |
| 566437 | FAIRLESS ENERGY LLC/FALLS TWP | 35.33 |
| 238848 | QUAD GRAPHICS MARKETING LLC/CHALFONT | 25.68 |
| 5560 | AVERY DENNISON CORP/QUAKERTOWN | 25.2 |
| 3185 | NORTHEAST FOODS INC/BAKE RITE ROLLS DIV | 24.6286 |
| 544042 | ARKEMA ALTUGLAS/BRISTOL TWP | 24.4 |
| 3184 | CRC IND INC/WARMINSTER | 19.26 |
| 519 | SUPERPAC INC/SOUTHAMPTON | 17.8233 |
| 482698 | WASTE MGMT PA/TULLYTOWN RES REC FAC | 15.74 |
| 509 | OLIVER-TOLAS HEALTHCARE PKG/FEASTERVILLE | 14.22 |
| 559689 | MCADOO & ALLEN/QUAKER COLOR DIV | 13 |
| 647346 | LIBERTY COATING CO LLC/MORRISVILLE | 12.94 |
| 508 | GREIF PACKAGING LLC/WARMINSTER | 12.89 |
| 3165 | RR DONNELLEY / QUAKERTOWN | 12.51 |
| 637 | FIBERMARK NORTH AMERICA INC/QUAKERTOWN | 9.3301 |
| 252449 | WASTE MGMT DSPL SVC /GROWS LDFL | 9.11 |
| 524625 | DUNMORE CORP/BRISTOL | 8.11 |
| 479819 | WHEELABRATOR FALLS INC/FALLS TWP | 7.1 |
| 491697 | NORTHTEC LLC/BRISTOL | 6.5018 |
| 543437 | DRAPER DBS INC/PERKASIE | 6.208 |
| 1161 | MRI FLEXIBLE PKG/NEWTOWN | 5.855 |
| 1170 | OLDCASTLE PRECAST INC/TELFORD | 5.8 |
| 245649 | ROHM & HAAS CO/BRISTOL | 5.7223 |
| 281862 | MILLER MATERIALS/RUSHLAND QUARRY | 5.5 |
| 2186 | CLEVELAND STEEL CONTAINER/QUAKERTOWN | 5.13 |
| 608 | BRACALENTE MFG CO INC/TRUMBAUERSVILLE | 4.89 |
| 722 | RJM MFG INC/FAIRLESS HILLS | 4.17 |
| 523906 | SUPERIOR WOODCRAFT/DOYLESTOWN PLT | 3.95 |
| 3188 | WESTROCK PACKAGING INC/BRISTOL | 3.5489 |
| 281480 | HANSON AGGREGATES/PENNS PARK PLT | 3.5397 |
| 276929 | US STEEL CORP/FAIRLESS HILLS | 3.531 |
| 705 | GILES & RANSOME INC/BENSALEM | 3.49 |
| 915 | BRIGHTSMITH LLC/FALLS TWP | 2.897 |
| 261989 | EUREKA STONE QUARRY/RUSH VALLEY 1 | 2.79 |
| 518604 | TAVO PKG INC/FAIRLESS HILLS | 2.56 |
| 257284 | NACEVILLE MATERIALS / CHALFONT | 2.54 |
| 3119 | G&W PA LAB/SELLERSVILLE | 1.3393 |
| 516225 | KVK TECH/NEWTOWN | 0.862 |
| 260960 | EUREKA STONE QUARRY/CHALFONT QUARRY & ASPH | 0.74 |
| 510078 | BOEKEL IND INC/FEASTERVILLE | 0.6145 |
| 510887 | CLEAN EARTH OF SOUTHEAST PA/MORRISVILLE | 0.534 |
| 684022 | WASTE MGMT OF PA DOCK FACIL/MORRISVILLE | 0.52 |
| 550729 | ORCHARD HILL MEM PARK/ABBEY GLEN | 0.397 |
| 574352 | WALTER R EARLE ASPHALT PLT/MORRISVILLE | 0.38 |
| 988 | DAN SCHANTZ FARMS/PLUMSTEAD | 0.3276 |
| 510902 | ST MARY MED CTR/LANGHORNE | 0.2529 |
| 514483 | EXELON GENERATION CO/PENNSBURY POWER PLT | 0.2446 |
| 516224 | EXELON GENERATION CO/FAIRLESS HILLS GEN STA | 0.1992 |
| 488870 | GE BETZ INC/TREVOSE | 0.1603 |
| 240953 | EXELON GENERATION CO/CROYDON GEN STA | 0.0818 |
| 491700 | EXELON GENERATION CO/FALLS TWP PEAK PWR PLT | 0.0527 |
| 670380 | KINDER MORGAN BULK TERM INC/FAIRLESS HILLS | 0.04 |

**Total Emissions for Selected Records:** **427.4416**
**Total Emissions for Selected Area:** **427.4416**

APPENDIX D-24

NEW JERSEY SCREENING LEVEL GUIDELINES VALUES

# NJDEP DIVISION OF AIR QUALITY RISK SCREENING WORKSHEET
## For Long-Term Carcinogenic and Noncarcinogenic Effects and Short-Term Effects

July 2016

For source operations emitting air toxics. One worksheet should be completed for each emission point, which should include all air toxics above reporting threshold or for which there is a federally enforceable limit included in an approved permit. Based on the assumptions made when generating the model, the following sources may not use this worksheet: (1) Sources without stacks, such as certain dry cleaners, degreasers, storage tanks, and gasoline stations, (2) sources with stacks with a horizontal or downward discharge direction, or (3) sources with stack heights less than 10 feet. See Technical Manual 1003 Guidance on Preparing a Risk Assessment for Air Contaminant Emissions for a complete list of assumptions. For information on how to evaluate risk from other kinds of sources, contact Air Quality Evaluation at 609-292-6722.

**To see a listing of air toxics by CAS number, click on the "CAS Index" tab at the bottom of this worksheet page.**

**This is a protected file. Changes are allowed only to certain cells (those in yellow). It is also a "read only" file. To save the data you input, select "File" on the menu above, then "Save as" in your own files, under the name of your choice. Input data only to yellow fields. Incremental cancer risk (IR) and hazard quotient (HQ) will calculate automatically when you type in the stack parameters (stack height and distance to property line) and an emission rate.**

**For references for toxicity data (URFs and RfCs), see the lists at www.nj.gov/dep/aqpp/risk.html.**

| | |
|---|---|
| Date | |
| Facility ID No. | |
| Activity ID No. | |
| Facility name | |
| Facility location | |
| File name (.xls) | |

| | | | | |
|---|---|---|---|---|
| Emission Unit/Batch Process ID No. | | Stack height[1] | | ft |
| Emission Point ID No. | | Distance to property line | | ft |
| Equipment ID No(s). | | **Annual air impact value, C'** | | **(ug/m$^3$)/(ton/yr)** |
| Operating Scenario(s) | | **24-hour air impact value, C'$_{st}$** | | **(ug/m$^3$)/(lb/hr)** |

**KEY:**

**Long-Term Effects**

- **Q =** Annual emission rate (in tons per year)
- **C =** C' x Q = Annual average ambient air concentration
- **URF =** Unit risk factor (for carcinogenic risk)
- **IR =** C x URF = Incremental risk (for carcinogen)
- **RfC =** Reference concentration (for noncarcinogenic effects)
- **HQ =** C/RfC = Hazard quotient (for noncarcinogenic risk)
- **Rslt =** The result of comparing the IR or HQ to the negligible threshold (FER if > threshold, Negl. if <= threshold)
- **FER =** Further Evaluation Required (See Notes for thresholds)
- **Negl. =** Negligible (See Notes for thresholds)

**Short-Term Effects**

- **$Q_h$ =** Hourly emission rate (in pounds per hour)
- **$C_{st}$ =** $C'_{st}$ x $Q_h$ = Short-term average ambient air concentration
- **$RfC_{st}$ =** Short-term reference concentration (for noncarcinogenic effects)
- **$HQ_{st}$ =** $C_{st}/RfC_{st}$ = Hazard quotient for short-term noncarcinogenic effects
- **Rslt =** The result of comparing the $HQ_{st}$ to the negligible threshold (FER if > threshold, Negl. if <= threshold)
- **FER =** Further Evaluation Required (See Notes for thresholds)
- **Negl. =** Negligible (See Notes for thresholds)

[1] When evaluating risk for diesel engines, use the equivalent stack height consistent with the memo dated June 10, 2009.
Click here to view the "Stack Height Equivalents for Use in First Level Screening Analyses for Diesel Engines" memo.

*0*

| | | | | LONG-TERM EFFECTS | | | | | | | | | SHORT-TERM EFFECTS | | | | |
|---|---|---|---|---|---|---|---|---|---|---|---|---|---|---|---|---|---|
| | HAP | CAS No. | Air Toxic | Q (tons/yr) | C (ug/m$^3$) | URF [(ug/m$^3$)$^{-1}$] | IR | Rslt | RfC (ug/m$^3$) | HQ | Rslt | $Q_h$ (lb/hr) | $C_{st}$ (ug/m$^3$) | $RfC_{st}$ | $HQ_{st}$ | Rslt |
| 1 | * | 75070 | Acetaldehyde | | | 2.2E-06 | | | 9 | | | | | 470 | | |
| 2 | * | 60355 | Acetamide | | | 2.0E-05 | | | | | | | | | | |
| 3 | | 67641 | Acetone | | | | | | 31000 | | | | | 62000 | | |
| 4 | | 75865 | Acetone cyanohydrin | | | | | | 2 | | | | | | | |
| 5 | * | 75058 | Acetonitrile | | | | | | 60 | | | | | | | |
| 6 | * | 98862 | Acetophenone | | | | | | 0.02 | | | | | | | |
| 7 | * | 53963 | Acetylaminofluorene (2-) | | | 1.3E-03 | | | | | | | | | | |
| 8 | * | 107028 | Acrolein | | | | | | 0.02 | | | | | 2.5 | | |
| 9 | * | 79061 | Acrylamide | | | 1.0E-04 | | | 6 | | | | | | | |
| 10 | * | 79107 | Acrylic acid | | | | | | 1 | | | | | 6000 | | |
| 11 | * | 107131 | Acrylonitrile | | | 6.8E-05 | | | 2 | | | | | | | |
| 12 | | 309002 | Aldrin | | | 4.9E-03 | | | | | | | | | | |
| 13 | * | 107051 | Allyl chloride | | | 6.0E-06 | | | 1 | | | | | | | |
| 14 | | 117793 | Aminoanthraquinone (2-) | | | 9.4E-06 | | | | | | | | | | |
| 15 | * | 92671 | Aminobiphenyl (4-) | | | 6.0E-03 | | | | | | | | | | |
| 16 | | 7664417 | Ammonia | | | | | | 100 | | | | | 3200 | | |
| 17 | * | 62533 | Aniline | | | 1.6E-06 | | | 1 | | | | | 3000 | | |
| 18 | * | 90040 | Anisidine (o-) | | | 4.0E-05 | | | | | | | | | | |
| 19 | ** | 1309644 | Antimony trioxide | | | | | | 0.2 | | | | | | | |
| 20 | | 140578 | Aramite | | | 7.1E-06 | | | | | | | | | | |
| 21 | * | | Arsenic (inorganic) | | | 4.3E-03 | | | 0.015 | | | | | 0.2 | | |
| 22 | ** | 7784421 | Arsine | | | | | | 0.05 | | | | | | | |
| 23 | * | 1332214 | Asbestos | | | 7.7E-03 | | | | | | | | | | |
| 24 | | 103333 | Azobenzene | | | 3.1E-05 | | | | | | | | | | |
| 25 | | | Barium | | | | | | | | | | | 0.5 | | |
| 26 | * | 71432 | Benzene | | | 7.8E-06 | | | 3 | | | | | 27 | | |
| 27 | * | 92875 | Benzidine | | | 6.7E-02 | | | | | | | | | | |
| 28 | ** | 50328 | Benzo(a)pyrene | | | 1.1E-03 | | | | | | | | | | |
| 29 | * | 98077 | Benzotrichloride | | | 3.7E-03 | | | | | | | | | | |
| 30 | * | 100447 | Benzyl chloride | | | 4.9E-05 | | | | | | | | 240 | | |
| 31 | * | | Beryllium | | | 2.4E-03 | | | 0.02 | | | | | | | |
| 32 | * | 92524 | Biphenyl (1,1-) | | | | | | 0.4 | | | | | | | |
| 33 | | 108601 | Bis(2-chloroisopropyl)ether | | | 1.0E-05 | | | | | | | | | | |
| 34 | * | 117817 | Bis(2-ethylhexyl)phthalate | | | 2.4E-06 | | | | | | | | | | |
| 35 | * | 542881 | Bis(chloromethyl)ether | | | 6.2E-02 | | | | | | | | | | |
| 36 | | 7440428 | Boron (elemental) | | | | | | 20 | | | | | | | |
| 37 | | 7637072 | Boron trifluoride | | | | | | 0.7 | | | | | | | |
| 38 | | 74975 | Bromochloromethane | | | | | | 40 | | | | | | | |
| 39 | | 75274 | Bromodichloromethane | | | 3.7E-05 | | | | | | | | | | |
| 40 | * | 75252 | Bromoform | | | 1.1E-06 | | | | | | | | | | |
| 41 | * | 106990 | Butadiene (1,3-) | | | 3.0E-05 | | | 2 | | | | | 660 | | |
| 42 | * | | Cadmium | | | 4.2E-03 | | | 0.02 | | | | | | | |
| 43 | | 105602 | Caprolactam | | | | | | 2.2 | | | | | 50 | | |
| 44 | * | 133062 | Captan | | | 6.6E-07 | | | | | | | | | | |
| 45 | * | 75150 | Carbon disulfide | | | | | | 700 | | | | | 6200 | | |
| 46 | * | 56235 | Carbon tetrachloride | | | 6.0E-06 | | | 40 | | | | | 1900 | | |
| 47 | * | 57749 | Chlordane | | | 1.0E-04 | | | 0.7 | | | | | | | |
| 48 | | 108171262 | Chlorinated paraffins | | | 2.0E-05 | | | | | | | | | | |
| 49 | * | 7782505 | Chlorine | | | | | | 0.2 | | | | | 210 | | |
| 50 | | 10049044 | Chlorine dioxide | | | | | | 0.2 | | | | | 28 | | |
| 51 | | 75683 | Chloro-1,1-difluoroethane (1-) *(HCFC-142b)* | | | | | | 50000 | | | | | | | |
| 52 | * | 532274 | Chloroacetophenone (2-) | | | | | | 0.03 | | | | | | | |
| 53 | * | 108907 | Chlorobenzene | | | | | | 1000 | | | | | | | |
| 54 | * | 510156 | Chlorobenzilate | | | 3.1E-05 | | | | | | | | | | |
| 55 | | 75456 | Chlorodifluoromethane *(HCFC-22)* | | | | | | 50000 | | | | | | | |
| 56 | * | 67663 | Chloroform | | | 2.3E-05 | | | 300 | | | | | 150 | | |
| 57 | * | 107302 | Chloromethyl methyl ether | | | 6.9E-04 | | | | | | | | | | |
| 58 | | 95830 | Chloro-o-phenylenediamine (4-) | | | 4.6E-06 | | | | | | | | | | |
| 59 | | 95692 | Chloro-o-toluidine (p-) | | | 7.7E-05 | | | | | | | | | | |
| 60 | | 76062 | Chloropicrin | | | | | | 0.4 | | | | | 29 | | |
| 61 | * | 126998 | Chloroprene | | | 5.0E-04 | | | 20 | | | | | | | |
| 62 | | 75296 | Chloropropane (2-) | | | | | | 100 | | | | | | | |
| 63 | ** | | Chromic acid mists (Cr VI) | | | | | | 0.008 | | | | | | | |
| 64 | ** | 18540299 | Chromium VI (total) | | | 1.2E-02 | | | | | | | | | | |
| 65 | ** | | Chromium VI dissolved aerosols | | | | | | 0.008 | | | | | | | |
| 66 | ** | | Chromium VI particulates | | | | | | 0.1 | | | | | | | |
| 67 | * | | Cobalt | | | 9.0E-03 | | | 0.006 | | | | | | | |
| 68 | * | 8007452 | Coke oven emissions | | | 6.2E-04 | | | | | | | | | | |
| 69 | | | Copper | | | | | | | | | | | 100 | | |
| 70 | | 120718 | Cresidine (p-) | | | 4.3E-05 | | | | | | | | | | |

| 0 | | | | LONG-TERM EFFECTS | | | | | | | | SHORT-TERM EFFECTS | | | | |
|---|---|---|---|---|---|---|---|---|---|---|---|---|---|---|---|---|
| | H A P | CAS No. | Air Toxic | Q (lb/hr) | C (ug/m$^3$) | URF [(ug/m$^3$)$^{-1}$] | IR | Rslt | RfC (ug/m$^3$) | HQ | Rslt | $Q_h$ (lb/hr) | $C_{st}$ (ug/m$^3$) | $RfC_{st}$ | $HQ_{st}$ | Rslt |
| 71 | * | | Cresol mixtures | | | | | | 600 | | | | | | | |
| 72 | | 98828 | Cumene | | | | | | 400 | | | | | | | |
| 73 | | 135206 | Cupferron | | | 6.3E-05 | | | | | | | | | | |
| 74 | | 110827 | Cyclohexane | | | | | | | | | | | 6000 | | |
| 75 | * | 72559 | DDE | | | 9.7E-05 | | | | | | | | | | |
| 76 | | 50293 | DDT | | | 9.7E-05 | | | | | | | | | | |
| 77 | | 615054 | Diaminoanisole (2,4-) | | | 6.6E-06 | | | | | | | | | | |
| 78 | | 124481 | Dibromochloromethane | | | 2.7E-05 | | | | | | | | | | |
| 79 | * | 96128 | Dibromo-3-chloropropane (1,2-) | | | 2.0E-03 | | | 0.2 | | | | | | | |
| 80 | | 764410 | Dichloro-2-butene (1,4-) | | | 4.2E-03 | | | | | | | | | | |
| 81 | | 95501 | Dichlorobenzene (1,2-) | | | | | | 200 | | | | | | | |
| 82 | * | 106467 | Dichlorobenzene (1,4-) | | | 1.1E-05 | | | 800 | | | | | | | |
| 83 | * | 91941 | Dichlorobenzidine (3,3'-) | | | 3.4E-04 | | | | | | | | | | |
| 84 | | 75718 | Dichlorodifluoromethane | | | | | | 100 | | | | | | | |
| 85 | * | 111444 | Dichloroethyl ether | | | 3.3E-04 | | | | | | | | | | |
| 86 | * | 542756 | Dichloropropene (1,3-) | | | 4.0E-06 | | | 20 | | | | | | | |
| 87 | * | 62737 | Dichlorvos | | | 8.3E-05 | | | 0.5 | | | | | | | |
| 88 | | 77736 | Dicyclopentadiene | | | | | | 0.3 | | | | | | | |
| 89 | | 60571 | Dieldrin | | | 4.6E-03 | | | | | | | | | | |
| 90 | | | Diesel particulate matter | | | 3.0E-04 | | | 5 | | | | | | | |
| 91 | * | 111422 | Diethanolamine | | | | | | 3 | | | | | | | |
| 92 | | 112345 | Diethylene glycol monobutyl ether | | | | | | 0.1 | | | | | | | |
| 93 | | 75376 | Difluoroethane (1,1-) | | | | | | 40000 | | | | | | | |
| 94 | * | 77781 | Dimethyl sulfate | | | 4.0E-03 | | | | | | | | | | |
| 95 | * | 60117 | Dimethylaminoazobenzene (4-) | | | 1.3E-03 | | | | | | | | | | |
| 96 | * | 79447 | Dimethylcarbamyl chloride | | | 3.7E-03 | | | | | | | | | | |
| 97 | * | 68122 | Dimethylformamide (N,N-) | | | | | | 30 | | | | | | | |
| 98 | * | 57147 | Dimethylhydrazine (1,1-) | | | | | | 0.002 | | | | | | | |
| 99 | | 540738 | Dimethylhydrazine (1,2-) | | | 1.6E-01 | | | | | | | | | | |
| 100 | * | 121142 | Dinitrotoluene (2,4-) | | | 8.9E-05 | | | | | | | | | | |
| 101 | * | 123911 | Dioxane (1,4-) | | | 5.0E-06 | | | 30 | | | | | 3000 | | |
| 102 | * | | Dioxin | See footnote "a" | | | | | | | | | | | | |
| 103 | * | 122667 | Diphenylhydrazine (1,2-) | | | 2.2E-04 | | | | | | | | | | |
| 104 | * | 106898 | Epichlorohydrin | | | 1.2E-06 | | | 1 | | | | | 1300 | | |
| 105 | * | 106887 | Epoxybutane (1,2-) | | | | | | 20 | | | | | | | |
| 106 | * | 140885 | Ethyl acrylate | | | | | | 8 | | | | | | | |
| 107 | * | 100414 | Ethylbenzene | | | 2.5E-06 | | | | | | | | 1000 | | |
| 108 | * | 51796 | Ethyl carbamate | | | 2.9E-04 | | | | | | | | | | |
| 109 | * | 75003 | Ethyl chloride | | | | | | | | | | | 10000 | | |
| 110 | * | 106934 | Ethylene dibromide | | | 6.0E-04 | | | 0.8 | | | | | | | |
| 111 | * | 107062 | Ethylene dichloride | | | 2.6E-05 | | | 400 | | | | | | | |
| 112 | * | 107211 | Ethylene glycol | | | | | | 400 | | | | | | | |
| 113 | * | 111762 | Ethylene glycol monobutyl ether | | | | | | 1600 | | | | | 14000 | | |
| 114 | ** | 110805 | Ethylene glycol monoethyl ether | | | | | | 200 | | | | | 370 | | |
| 115 | ** | 111159 | Ethylene glycol monoethyl ether acetate | | | | | | 300 | | | | | 140 | | |
| 116 | ** | 109864 | Ethylene glycol monomethyl ether | | | | | | 20 | | | | | 93 | | |
| 117 | ** | 110496 | Ethylene glycol monomethyl ether acetate | | | | | | 90 | | | | | | | |
| 118 | * | 75218 | Ethylene oxide | | | 8.8E-05 | | | 30 | | | | | 42 | | |
| 119 | * | 96457 | Ethylene thiourea | | | 1.3E-05 | | | | | | | | | | |
| 120 | * | 151564 | Ethyleneimine | | | 1.9E-02 | | | | | | | | | | |
| 121 | * | 75343 | Ethylidene dichloride | | | 1.6E-06 | | | 500 | | | | | | | |
| 122 | | 16984488 | Fluoride | | | | | | 13 | | | | | | | |
| 123 | * | 50000 | Formaldehyde | | | 1.3E-05 | | | 9 | | | | | 55 | | |
| 124 | | 98011 | Furfural | | | | | | 50 | | | | | | | |
| 125 | | | Gasoline vapors | | | 1.0E-06 | | | 15 | | | | | | | |
| 126 | | 111308 | Glutaraldehyde | | | | | | 0.08 | | | | | | | |
| 127 | | 765344 | Glycidaldehyde | | | | | | 1 | | | | | | | |
| 128 | * | 76448 | Heptachlor | | | 1.3E-03 | | | | | | | | | | |
| 129 | | 1024573 | Heptachlor epoxide | | | 2.6E-03 | | | | | | | | | | |
| 130 | * | 118741 | Hexachlorobenzene | | | 4.6E-04 | | | | | | | | | | |
| 131 | * | 87683 | Hexachlorobutadiene | | | 2.2E-05 | | | | | | | | | | |
| 132 | ** | 319846 | Hexachlorocyclohexane (alpha-) | | | 1.8E-03 | | | | | | | | | | |
| 133 | ** | 319857 | Hexachlorocyclohexane (beta-) | | | 5.3E-04 | | | | | | | | | | |
| 134 | * | 58899 | Hexachlorocyclohexane (gamma-) | | | 3.1E-04 | | | | | | | | | | |
| 135 | ** | 608731 | Hexachlorocyclohexane (technical grade) | | | 5.1E-04 | | | | | | | | | | |
| 136 | * | 77474 | Hexachlorocyclopentadiene | | | | | | 0.2 | | | | | | | |
| 137 | | 19408743 | Hexachlorodibenzo-p-dioxin, mixture | | | 1.3E+00 | | | | | | | | | | |
| 138 | * | 67721 | Hexachloroethane | | | 1.1E-05 | | | 30 | | | | | | | |
| 139 | * | 822060 | Hexamethylene diisocyanate | | | | | | 0.01 | | | | | | | |
| 140 | * | 110543 | Hexane (N-) | | | | | | 700 | | | | | | | |
| 141 | * | 302012 | Hydrazine | | | 4.9E-03 | | | 0.2 | | | | | 10 | | |
| 142 | | 10034932 | Hydrazine sulfate | | | 4.9E-03 | | | | | | | | | | |
| 143 | * | 7647010 | Hydrogen chloride | | | | | | 20 | | | | | 2100 | | |
| 144 | ** | 74908 | Hydrogen cyanide | | | | | | 0.8 | | | | | 340 | | |
| 145 | * | 7664393 | Hydrogen fluoride | | | | | | 14 | | | | | 240 | | |
| 146 | ** | 7783075 | Hydrogen selenide | | | | | | | | | | | 5 | | |
| 147 | | 7783064 | Hydrogen sulfide | | | | | | 2 | | | | | 42 | | |
| 148 | * | 78591 | Isophorone | | | | | | 2000 | | | | | | | |
| 149 | | 67630 | Isopropanol | | | | | | | | | | | 3200 | | |
| 150 | * | | Lead | | | 1.2E-05 | | | | | | | | 0.1 | | |
| 151 | * | 108316 | Maleic anhydride | | | | | | 0.7 | | | | | | | |
| 152 | * | | Manganese | | | | | | 0.05 | | | | | 0.17 | | |
| 153 | * | | Mercury (elemental) | | | | | | 0.3 | | | | | | | |
| 154 | * | 7439976 | Mercury (inorganic) | | | | | | 0.03 | | | | | 0.6 | | |
| 155 | | 126987 | Methacrylonitrile | | | | | | 0.7 | | | | | | | |
| 156 | * | 67561 | Methanol | | | | | | 4000 | | | | | 28000 | | |
| 157 | * | 74839 | Methyl bromide | | | | | | 5 | | | | | 3900 | | |
| 158 | * | 74873 | Methyl chloride | | | 1.8E-06 | | | 90 | | | | | | | |
| 159 | * | 71556 | Methyl chloroform | | | | | | 1000 | | | | | 9000 | | |
| 160 | | 78933 | Methyl ethyl ketone | | | | | | 5000 | | | | | 13000 | | |
| 161 | * | 108101 | Methyl isobutyl ketone | | | | | | | | | | | 3000 | | |
| 162 | * | 624839 | Methyl isocyanate | | | | | | 1 | | | | | | | |
| 163 | * | 80626 | Methyl methacrylate | | | | | | 700 | | | | | | | |
| 164 | | 25013154 | Methyl styrene (mixed isomers) | | | | | | 40 | | | | | | | |
| 165 | * | 1634044 | Methyl tert butyl ether | | | 2.6E-07 | | | 3000 | | | | | | | |
| 166 | | 108872 | Methylcyclohexane | | | | | | 3000 | | | | | | | |
| 167 | * | 101144 | Methylene bis(2-chloroaniline) (4,4'-) | | | 4.3E-04 | | | | | | | | | | |
| 168 | * | 75092 | Methylene chloride | | | 1.3E-08 | | | 600 | | | | | 14000 | | |
| 169 | * | 101779 | Methylenedianiline (4,4-) | | | 4.6E-04 | | | 20 | | | | | | | |
| 170 | * | 101688 | Methylenediphenyl diisocyanate (4,4'-) | | | | | | 0.6 | | | | | | | |
| 171 | * | 60344 | Methylhydrazine | | | 1.0E-03 | | | 0.02 | | | | | | | |
| 172 | | 90948 | Michler's ketone | | | 2.5E-04 | | | | | | | | | | |
| 173 | * | | Mineral fibers (<1% free silica) | | | | | | 24 | | | | | | | |
| 174 | * | 91203 | Naphthalene | | | 3.4E-05 | | | 3 | | | | | | | |
| 175 | * | | Nickel and compounds | | | 2.4E-04 | | | 0.014 | | | | | 0.2 | | |
| 176 | ** | 1313991 | Nickel oxide | | | | | | 0.02 | | | | | | | |
| 177 | ** | | Nickel, soluble salts | | | | | | 0.2 | | | | | | | |
| 178 | | 7697372 | Nitric acid | | | | | | | | | | | 86 | | |
| 179 | | 88744 | Nitroaniline (o-) | | | | | | 0.05 | | | | | | | |
| 180 | * | 98953 | Nitrobenzene | | | 4.0E-05 | | | 9 | | | | | | | |

| 0 | | | | LONG-TERM EFFECTS | | | | | | | | SHORT-TERM EFFECTS | | | | |
|---|---|---|---|---|---|---|---|---|---|---|---|---|---|---|---|---|
| | H A P | CAS No. | Air Toxic | Q (lb/hr) | C (ug/m$^3$) | URF [(ug/m$^3$)$^{-1}$] | IR | Rslt | RfC (ug/m$^3$) | HQ | Rslt | $Q_h$ (lb/hr) | $C_{st}$ (ug/m$^3$) | $RfC_{st}$ | $HQ_{st}$ | Rslt |
| 181 | * | 79469 | Nitropropane (2-) | | | 2.7E-03 | | | 20 | | | | | | | |
| 182 | | 55185 | Nitrosodiethylamine (N-) | | | 4.3E-02 | | | | | | | | | | |
| 183 | * | 62759 | Nitrosodimethylamine (N-) | | | 1.4E-02 | | | | | | | | | | |
| 184 | | 924163 | Nitrosodi-n-butylamine (N-) | | | 1.6E-03 | | | | | | | | | | |
| 185 | | 621647 | Nitrosodi-n-propylamine (N-) | | | 2.0E-03 | | | | | | | | | | |
| 186 | | 86306 | Nitrosodiphenylamine (N-) | | | 2.6E-06 | | | | | | | | | | |
| 187 | | 156105 | Nitrosodiphenylamine (p-) | | | 6.3E-06 | | | | | | | | | | |
| 188 | | 10595956 | Nitrosomethylethylamine (N-) | | | 6.3E-03 | | | | | | | | | | |
| 189 | * | 59892 | Nitrosomorpholine (N-) | | | 1.9E-03 | | | | | | | | | | |
| 190 | | 759739 | Nitroso-n-ethylurea (N-) | | | 7.7E-03 | | | | | | | | | | |
| 191 | * | 684935 | Nitroso-n-methylurea (N-) | | | 3.4E-02 | | | | | | | | | | |
| 192 | | 100754 | Nitrosopiperidine (N-) | | | 2.7E-03 | | | | | | | | | | |
| 193 | | 930552 | Nitrosopyrrolidine (N-) | | | 6.1E-04 | | | | | | | | | | |
| 194 | * | 87865 | Pentachlorophenol | | | 5.1E-06 | | | | | | | | | | |
| 195 | * | 108952 | Phenol | | | | | | 200 | | | | | 5800 | | |
| 196 | * | 75445 | Phosgene | | | | | | 0.3 | | | | | 4 | | |
| 197 | * | 7803512 | Phosphine | | | | | | 0.3 | | | | | | | |
| 198 | * | 7664382 | Phosphoric acid | | | | | | 10 | | | | | | | |
| 199 | * | | Phosphorus (white) | | | | | | 0.07 | | | | | | | |
| 200 | * | 85449 | Phthalic anhydride | | | | | | 20 | | | | | | | |
| 201 | * | 1336363 | Polychlorinated biphenyls (PCBs) | | | 1.0E-04 | | | | | | | | | | |
| 202 | * | | Polycylic aromatic hydrocarbons (PAHs) | See footnote "b" | | | | | | | | | | | | |
| 203 | * | | Polycylic organic matter (POM) | | | | | | | | | | | | | |
| 204 | | 7758012 | Potassium bromate | | | 1.4E-04 | | | | | | | | | | |
| 205 | * | 1120714 | Propane sultone (1,3-) | | | 6.9E-04 | | | | | | | | | | |
| 206 | * | 57578 | Propiolactone (beta-) | | | 4.0E-03 | | | | | | | | | | |
| 207 | * | 123386 | Propionaldehyde | | | | | | 8 | | | | | | | |
| 208 | | 115071 | Propylene | | | | | | 3000 | | | | | | | |
| 209 | * | 78875 | Propylene dichloride | | | 1.0E-05 | | | 4 | | | | | | | |
| 210 | | 107982 | Propylene glycol monomethyl ether | | | | | | 2000 | | | | | | | |
| 211 | * | 75569 | Propylene oxide | | | 3.7E-06 | | | 30 | | | | | 3100 | | |
| 212 | ** | | Selenium and compounds | | | | | | 20 | | | | | | | |
| 213 | | 7631869 | Silica (crystalline, respirable) | | | | | | 3 | | | | | | | |
| 214 | | 1310732 | Sodium hydroxide | | | | | | | | | | | 8 | | |
| 215 | * | 100425 | Styrene | | | 5.7E-07 | | | 1000 | | | | | 21000 | | |
| 216 | * | 96093 | Styrene oxide | | | 4.6E-05 | | | | | | | | | | |
| 217 | | | Sulfates | | | | | | | | | | | 120 | | |
| 218 | | 7664939 | Sulfuric acid | | | | | | 1 | | | | | 120 | | |
| 219 | * | 1746016 | Tetrachlorodibenzo(p)dioxin (2,3,7,8-) | | | 3.8E+01 | | | 0.00004 | | | | | | | |
| 220 | | 630206 | Tetrachloroethane (1,1,1,2-) | | | 7.4E-06 | | | | | | | | | | |
| 221 | * | 79345 | Tetrachloroethane (1,1,2,2-) | | | 5.8E-05 | | | | | | | | | | |
| 222 | * | 127184 | Tetrachloroethylene | | | 5.9E-06 | | | 40 | | | | | 20000 | | |
| 223 | | 811972 | Tetrafluoroethane (1,1,1,2-) | | | | | | 80000 | | | | | | | |
| 224 | | 109999 | Tetrahydrofuran | | | | | | 2000 | | | | | | | |
| 225 | | 62555 | Thioacetamide | | | 1.7E-03 | | | | | | | | | | |
| 226 | * | 7550450 | Titanium tetrachloride | | | | | | 0.1 | | | | | | | |
| 227 | * | 108883 | Toluene | | | | | | 5000 | | | | | 37000 | | |
| 228 | * | 584849 | Toluene diisocyanate (2,4-) | | | 1.1E-05 | | | 0.07 | | | | | 14 | | |
| 229 | * | 26471625 | Toluene diisocyanate (2,4-/2,6-) | | | 1.1E-05 | | | 0.07 | | | | | | | |
| 230 | * | 91087 | Toluene diisocyanate (2,6-) | | | 1.1E-05 | | | 0.07 | | | | | | | |
| 231 | * | 95807 | Toluene-2,4-diamine | | | 1.1E-03 | | | | | | | | | | |
| 232 | * | 95534 | Toluidine (o-) | | | 5.1E-05 | | | | | | | | | | |
| 233 | * | 8001352 | Toxaphene | | | 3.2E-04 | | | | | | | | | | |
| 234 | | 76131 | Trichloro-1,2,2-trifluoroethane (1,1,2-) | | | | | | 30000 | | | | | | | |
| 235 | * | 120821 | Trichlorobenzene (1,2,4-) | | | | | | 2 | | | | | | | |
| 236 | * | 79005 | Trichloroethane (1,1,2-) | | | 1.6E-05 | | | | | | | | | | |
| 237 | * | 79016 | Trichloroethylene | | | 4.8E-06 | | | 2 | | | | | 2 | | |
| 238 | | 75694 | Trichlorofluoromethane | | | | | | 700 | | | | | | | |
| 239 | * | 88062 | Trichlorophenol (2,4,6-) | | | 3.1E-06 | | | | | | | | | | |
| 240 | * | 121448 | Triethylamine | | | | | | 7 | | | | | 2800 | | |
| 241 | * | 1582098 | Trifluralin | | | 2.2E-06 | | | | | | | | | | |
| 242 | | 95636 | Trimethylbenzene (1,2,4-) | | | | | | 7 | | | | | | | |
| 243 | | 7440622 | Vanadium | | | | | | 0.1 | | | | | 0.8 | | |
| 244 | | 1314621 | Vanadium pentoxide | | | | | | | | | | | 30 | | |
| 245 | * | 108054 | Vinyl acetate | | | | | | 200 | | | | | | | |
| 246 | * | 593602 | Vinyl bromide | | | 3.2E-05 | | | 3 | | | | | | | |
| 247 | * | 75014 | Vinyl chloride | | | 8.8E-06 | | | 100 | | | | | 180000 | | |
| 248 | * | 75354 | Vinylidene chloride | | | | | | 200 | | | | | | | |
| 249 | * | | Xylene (m-,o-,p-, or mixed isomers) | | | | | | 100 | | | | | 22000 | | |

**If any calculated long-term or short-term effects for an air toxic result in "Further Evaluation Required" (FER) on this Risk Screening Worksheet, a Refined Risk Assessment is required for that air toxic.**

**NOTE:**

* **Clean Air Act hazardous air pollutant**

** **Clean Air Act hazardous air pollutant, but not listed individually (part of a group)**

**a** Dioxins may be considered to be all 2,3,7,8-tetrachlorodibenzo(p)dioxin), or separated into congeners (contact AQEv).

**b** PAH or POM may be considered to be all benzo(a)pyrene, or separated into individual PAHs (contact AQEv).

The results are determined by comparing the long-term and short-term effects to the single-source thresholds, listed below.
The threshold value of negligible risk for incremental risk (IR) is 1 in a million (1.0E-06). An IR value less than or equal to 1 in million is considered negligible.
The threshold value of negligible risk for long-term hazard quotient (HQ) for non-carcinogenic risk is 1.0. An HQ less than or equal to 1.0 is considered negligible.
The threshold value of negligible risk for short-term hazard quotient ($HQ_{st}$) for non-carcinogenic risk is 1.0. An $HQ_{st}$ less than or equal to 1.0 is considered negligible.

APPENDIX D-25

NON-NAAQS AMBIENT MONITORING DATA

**Total HAPs for 2013**
**Camden County, NJ**
**Duration- 24 Hours**

| Parameter Name | Units of Measure | Obs | Max | Mean | Min | Median |
|---|---|---|---|---|---|---|
| Ethylene dibromide | Micrograms/cubic meter (25 C) | 57 | 0.07687 | 0.00134 | 0 | 0 |
| Vinyl chloride | Micrograms/cubic meter (25 C) | 57 | 0.20461 | 0.01032 | 0 | 0 |
| Trichloroethylene | Micrograms/cubic meter (25 C) | 57 | 0.32261 | 0.04716 | 0 | 0 |
| trans-1,3-Dichloropropene | Micrograms/cubic meter (25 C) | 57 | 0 | 0 | 0 | 0 |
| Tetrachloroethylene | Micrograms/cubic meter (25 C) | 57 | 0.33931 | 0.13096 | 0 | 0.13572 |
| Dichloromethane | Micrograms/cubic meter (25 C) | 33 | 12.8945 | 1.17012 | 0 | 0 |
| cis-1,3-Dichloropropene | Micrograms/cubic meter (25 C) | 57 | 0 | 0 | 0 | 0 |
| Chloroform | Micrograms/cubic meter (25 C) | 57 | 0.29312 | 0.13542 | 0 | 0.14656 |
| Carbon tetrachloride | Micrograms/cubic meter (25 C) | 57 | 0.88127 | 0.60297 | 0.37768 | 0.62948 |
| Benzene | Micrograms/cubic meter (25 C) | 57 | 2.03511 | 0.85249 | 0.29301 | 0.77781 |
| Acrylonitrile | Micrograms/cubic meter (25 C) | 57 | 0.68036 | 0.06018 | 0 | 0 |
| 1,3-Butadiene | Micrograms/cubic meter (25 C) | 57 | 0.20475 | 0.09698 | 0 | 0.08854 |
| 1,2-Dichloropropane | Micrograms/cubic meter (25 C) | 57 | 0 | 0 | 0 | 0 |
| Ethylene dichloride | Micrograms/cubic meter (25 C) | 57 | 0.20248 | 0.08738 | 0 | 0.08099 |
| 1,1,2,2-Tetrachloroethane | Micrograms/cubic meter (25 C) | 57 | 0.06868 | 0.00964 | 0 | 0 |
| Formaldehyde | Micrograms/cubic meter (25 C) | 59 | 11.6748 | 4.96568 | 1.4747 | 4.66991 |
| Acetaldehyde | Micrograms/cubic meter (25 C) | 59 | 6.39946 | 2.77732 | 0.99146 | 2.52373 |
| Nickel PM2.5 LC | Micrograms/cubic meter (LC) | 87 | 0.014 | 0.00278 | 0 | 0.002 |
| Manganese PM2.5 LC | Micrograms/cubic meter (LC) | 87 | 0.025 | 0.00364 | 0 | 0.003 |
| Lead PM2.5 LC | Micrograms/cubic meter (LC) | 87 | 0.375 | 0.00875 | 0 | 0.002 |
| Chromium PM2.5 LC | Micrograms/cubic meter (LC) | 87 | 0.051 | 0.00386 | 0 | 0.002 |
| Cadmium PM2.5 LC | Micrograms/cubic meter (LC) | 87 | 0.024 | 0.00188 | 0 | 0 |
| Arsenic PM2.5 LC | Micrograms/cubic meter (LC) | 87 | 0.01 | 0.00086 | 0 | 0 |

**Total HAPs for 2014**
**Camden County, NJ**
**Duration- 24 Hours**

| Parameter Name | Units of Measure | Obs | Max | Mean | Min | Median |
|---|---|---|---|---|---|---|
| Ethylene dibromide | Micrograms/cubic meter (25 C) | 61 | 0 | 0 | 0 | 0 |
| Vinyl chloride | Micrograms/cubic meter (25 C) | 61 | 0.25577 | 0.00901 | 0 | 0 |
| Trichloroethylene | Micrograms/cubic meter (25 C) | 61 | 0.80653 | 0.04098 | 0 | 0 |
| trans-1,3-Dichloropropene | Micrograms/cubic meter (25 C) | 61 | 0 | 0 | 0 | 0 |
| Tetrachloroethylene | Micrograms/cubic meter (25 C) | 61 | 0.33931 | 0.1157 | 0 | 0.10179 |
| Dichloromethane | Micrograms/cubic meter (25 C) | 41 | 1.35548 | 0.53914 | 0.3128 | 0.48658 |
| cis-1,3-Dichloropropene | Micrograms/cubic meter (25 C) | 61 | 0 | 0 | 0 | 0 |
| Chloroform | Micrograms/cubic meter (25 C) | 61 | 0.19541 | 0.13294 | 0.0977 | 0.14656 |
| Carbon tetrachloride | Micrograms/cubic meter (25 C) | 61 | 0.75537 | 0.614 | 0.2518 | 0.62948 |
| Benzene | Micrograms/cubic meter (25 C) | 61 | 2.11502 | 0.75406 | 0.3463 | 0.62864 |
| Acrylonitrile | Micrograms/cubic meter (25 C) | 61 | 0.26056 | 0.01945 | 0 | 0 |
| 1,3-Butadiene | Micrograms/cubic meter (25 C) | 61 | 0.24348 | 0.09416 | 0.0332 | 0.083 |
| 1,2-Dichloropropane | Micrograms/cubic meter (25 C) | 61 | 0.06165 | 0.00101 | 0 | 0 |
| Ethylene dichloride | Micrograms/cubic meter (25 C) | 61 | 0.16199 | 0.08132 | 0 | 0.08099 |
| 1,1,2,2-Tetrachloroethane | Micrograms/cubic meter (25 C) | 61 | 0.06868 | 0.00731 | 0 | 0 |
| Formaldehyde | Micrograms/cubic meter (25 C) | 60 | 11.92055 | 4.47533 | 1.9663 | 4.05544 |
| Acetaldehyde | Micrograms/cubic meter (25 C) | 60 | 6.30933 | 2.48768 | 1.1717 | 2.34346 |
| Nickel PM2.5 LC | Micrograms/cubic meter (LC) | 98 | 0.028 | 0.0034 | 0 | 0.002 |
| Manganese PM2.5 LC | Micrograms/cubic meter (LC) | 98 | 0.014 | 0.00327 | 0 | 0.002 |
| Lead PM2.5 LC | Micrograms/cubic meter (LC) | 98 | 0.044 | 0.00501 | 0 | 0.002 |
| Chromium PM2.5 LC | Micrograms/cubic meter (LC) | 98 | 0.113 | 0.00594 | 0 | 0.002 |
| Cadmium PM2.5 LC | Micrograms/cubic meter (LC) | 98 | 0.02 | 0.00179 | 0 | 0 |
| Arsenic PM2.5 LC | Micrograms/cubic meter (LC) | 98 | 0.009 | 0.0009 | 0 | 0 |

**Total HAPs for 2015**
**Camden County, NJ**
**Duration- 24 Hours**

| Parameter Name | Units of Measure | Obs | Max | Mean | Min | Median |
|---|---|---|---|---|---|---|
| Ethylene dibromide | Micrograms/cubic meter (25 C) | 61 | 0.07687 | 0.00441 | 0 | 0 |
| Vinyl chloride | Micrograms/cubic meter (25 C) | 61 | 0.07673 | 0.01299 | 0 | 0 |
| Trichloroethylene | Micrograms/cubic meter (25 C) | 61 | 0.72588 | 0.07272 | 0 | 0.05376 |
| trans-1,3-Dichloropropene | Micrograms/cubic meter (25 C) | 61 | 0 | 0 | 0 | 0 |
| Tetrachloroethylene | Micrograms/cubic meter (25 C) | 61 | 0.40717 | 0.1602 | 0.03393 | 0.13572 |
| Dichloromethane | Micrograms/cubic meter (25 C) | 61 | 127.902 | 2.61411 | 0.24329 | 0.45182 |
| cis-1,3-Dichloropropene | Micrograms/cubic meter (25 C) | 61 | 0 | 0 | 0 | 0 |
| Chloroform | Micrograms/cubic meter (25 C) | 61 | 0.29312 | 0.14896 | 0.0977 | 0.14656 |
| Carbon tetrachloride | Micrograms/cubic meter (25 C) | 61 | 0.81832 | 0.63051 | 0.25179 | 0.62948 |
| Benzene | Micrograms/cubic meter (25 C) | 61 | 3.96367 | 0.85755 | 0.34096 | 0.71388 |
| Acrylonitrile | Micrograms/cubic meter (25 C) | 61 | 0 | 0 | 0 | 0 |
| 1,3-Butadiene | Micrograms/cubic meter (25 C) | 61 | 0.39843 | 0.08917 | 0.02213 | 0.0664 |
| 1,2-Dichloropropane | Micrograms/cubic meter (25 C) | 61 | 0.07706 | 0.00176 | 0 | 0 |
| Ethylene dichloride | Micrograms/cubic meter (25 C) | 61 | 0.24298 | 0.08398 | 0 | 0.08099 |
| 1,1,2,2-Tetrachloroethane | Micrograms/cubic meter (25 C) | 61 | 0.06868 | 0.00675 | 0 | 0 |
| Formaldehyde | Micrograms/cubic meter (25 C) | 59 | 8.11089 | 3.57637 | 0.98313 | 3.0723 |
| Acetaldehyde | Micrograms/cubic meter (25 C) | 59 | 6.76 | 2.02723 | 0.63093 | 1.8928 |
| Nickel PM2.5 LC | Micrograms/cubic meter (LC) | 53 | 0.008 | 0.00143 | 0 | 0.001 |
| Manganese PM2.5 LC | Micrograms/cubic meter (LC) | 53 | 0.01 | 0.00252 | 0 | 0.002 |
| Lead PM2.5 LC | Micrograms/cubic meter (LC) | 53 | 0.019 | 0.00271 | 0 | 0.002 |
| Chromium PM2.5 LC | Micrograms/cubic meter (LC) | 53 | 0.034 | 0.00305 | 0 | 0.001 |
| Cadmium PM2.5 LC | Micrograms/cubic meter (LC) | 53 | 0.019 | 0.0015 | 0 | 0 |
| Arsenic PM2.5 LC | Micrograms/cubic meter (LC) | 53 | 0.005 | 0.00058 | 0 | 0 |

**Total HAPs for 2013**
**Philadelphia County, PA**

| Parameter Name | Duration | Units of Measure | Obs | Max | Mean | Min | Median |
|---|---|---|---|---|---|---|---|
| Ethylene dibromide | 24 Hr. | Micrograms/cubic meter (25 C) | 60 | 0 | 0 | 0 | 0 |
| Ethylene dibromide | 24 Hr. | Micrograms/cubic meter (25 C) | 59 | 0 | 0 | 0 | 0 |
| Ethylene dibromide | 24 Hr. | Micrograms/cubic meter (25 C) | 61 | 0 | 0 | 0 | 0 |
| Ethylene dibromide | 24 Hr. | Micrograms/cubic meter (25 C) | 61 | 0.38439 | 0.0063 | 0 | 0 |
| Ethylene dibromide | 24 Hr. | Micrograms/cubic meter (25 C) | 60 | 0 | 0 | 0 | 0 |
| Chloroform | 24 Hr. | Micrograms/cubic meter (25 C) | 59 | 5.86249 | 0.84459 | 0 | 0.4885 |
| Chloroform | 24 Hr. | Micrograms/cubic meter (25 C) | 58 | 0.48854 | 0.08423 | 0 | 0 |
| Chloroform | 24 Hr. | Micrograms/cubic meter (25 C) | 60 | 0.48854 | 0.14656 | 0 | 0 |
| Chloroform | 24 Hr. | Micrograms/cubic meter (25 C) | 61 | 0.48854 | 0.08809 | 0 | 0 |
| Chloroform | 24 Hr. | Micrograms/cubic meter (25 C) | 60 | 0.97708 | 0.1547 | 0 | 0 |
| 1,3-Butadiene | 24 Hr. | Micrograms/cubic meter (25 C) | 60 | 1.60481 | 0.06732 | 0 | 0 |
| 1,3-Butadiene | 24 Hr. | Micrograms/cubic meter (25 C) | 59 | 0.66406 | 0.0272 | 0 | 0 |
| 1,3-Butadiene | 24 Hr. | Micrograms/cubic meter (25 C) | 61 | 1.60481 | 0.11521 | 0 | 0 |
| 1,3-Butadiene | 24 Hr. | Micrograms/cubic meter (25 C) | 61 | 1.21744 | 0.04808 | 0 | 0 |
| 1,3-Butadiene | 24 Hr. | Micrograms/cubic meter (25 C) | 60 | 1.10676 | 0.04058 | 0 | 0 |
| Acetaldehyde | 3 Hr. | Micrograms/cubic meter (25 C) | 4 | 2.704 | 2.34346 | 2.07306 | 2.3435 |
| Acetaldehyde | 24 Hr. | Micrograms/cubic meter (25 C) | 62 | 5.9488 | 2.16174 | 0.36053 | 1.9829 |
| Acetaldehyde | 3 Hr. | Micrograms/cubic meter (25 C) | 110 | 6.39946 | 1.81086 | 0 | 2.2533 |
| Acetaldehyde | 24 Hr. | Micrograms/cubic meter (25 C) | 3 | 1.8928 | 1.83271 | 1.71253 | 1.8928 |
| Acetaldehyde | 24 Hr. | Micrograms/cubic meter (25 C) | 60 | 2.9744 | 1.20478 | 0 | 1.0816 |
| Acetaldehyde | 24 Hr. | Micrograms/cubic meter (25 C) | 61 | 9.91466 | 3.27878 | 0 | 2.6139 |
| Acetaldehyde | 24 Hr. | Micrograms/cubic meter (25 C) | 60 | 3.87573 | 1.79966 | 0 | 1.8027 |
| Acetaldehyde | 24 Hr. | Micrograms/cubic meter (25 C) | 61 | 3.33493 | 1.5101 | 0 | 1.5323 |
| Acrylonitrile | 24 Hr. | Micrograms/cubic meter (25 C) | 60 | 1.66472 | 0.84201 | 0 | 0.8686 |
| Acrylonitrile | 24 Hr. | Micrograms/cubic meter (25 C) | 59 | 1.80948 | 0.66613 | 0 | 0.5067 |
| Acrylonitrile | 24 Hr. | Micrograms/cubic meter (25 C) | 61 | 1.44758 | 0.68226 | 0 | 0.6514 |
| Acrylonitrile | 24 Hr. | Micrograms/cubic meter (25 C) | 61 | 2.24376 | 0.68226 | 0 | 0.579 |
| Acrylonitrile | 24 Hr. | Micrograms/cubic meter (25 C) | 60 | 1.30283 | 0.49459 | 0 | 0.4343 |
| cis-1,3-Dichloropropene | 24 Hr. | Micrograms/cubic meter (25 C) | 60 | 0.15137 | 0.00252 | 0 | 0 |
| cis-1,3-Dichloropropene | 24 Hr. | Micrograms/cubic meter (25 C) | 59 | 0.15137 | 0.00256 | 0 | 0 |
| cis-1,3-Dichloropropene | 24 Hr. | Micrograms/cubic meter (25 C) | 61 | 0.15137 | 0.00496 | 0 | 0 |
| cis-1,3-Dichloropropene | 24 Hr. | Micrograms/cubic meter (25 C) | 61 | 0 | 0 | 0 | 0 |
| cis-1,3-Dichloropropene | 24 Hr. | Micrograms/cubic meter (25 C) | 60 | 0 | 0 | 0 | 0 |
| Trichloroethylene | 24 Hr. | Micrograms/cubic meter (25 C) | 59 | 10.75379 | 0.24606 | 0 | 0 |
| Trichloroethylene | 24 Hr. | Micrograms/cubic meter (25 C) | 59 | 0.26884 | 0.01367 | 0 | 0 |
| Trichloroethylene | 24 Hr. | Micrograms/cubic meter (25 C) | 61 | 0.26884 | 0.01322 | 0 | 0 |
| Trichloroethylene | 24 Hr. | Micrograms/cubic meter (25 C) | 60 | 0.26884 | 0.0224 | 0 | 0 |
| Trichloroethylene | 24 Hr. | Micrograms/cubic meter (25 C) | 60 | 1.07537 | 0.02688 | 0 | 0 |
| 1,1,2,2-Tetrachloroethane | 24 Hr. | Micrograms/cubic meter (25 C) | 60 | 0 | 0 | 0 | 0 |
| 1,1,2,2-Tetrachloroethane | 24 Hr. | Micrograms/cubic meter (25 C) | 59 | 0.34344 | 0.00582 | 0 | 0 |
| 1,1,2,2-Tetrachloroethane | 24 Hr. | Micrograms/cubic meter (25 C) | 61 | 0 | 0 | 0 | 0 |
| 1,1,2,2-Tetrachloroethane | 24 Hr. | Micrograms/cubic meter (25 C) | 61 | 0.34344 | 0.00563 | 0 | 0 |
| 1,1,2,2-Tetrachloroethane | 24 Hr. | Micrograms/cubic meter (25 C) | 60 | 0.34344 | 0.00572 | 0 | 0 |
| Vinyl chloride | 24 Hr. | Micrograms/cubic meter (25 C) | 60 | 0 | 0 | 0 | 0 |

| | | | | | | | |
|---|---|---|---|---|---|---|---|
| Vinyl chloride | 24 Hr. | Micrograms/cubic meter (25 C) | 59 | 0.12788 | 0.00216 | 0 | 0 |
| Vinyl chloride | 24 Hr. | Micrograms/cubic meter (25 C) | 61 | 0.25577 | 0.01886 | 0 | 0 |
| Vinyl chloride | 24 Hr. | Micrograms/cubic meter (25 C) | 61 | 0.25577 | 0.01467 | 0 | 0 |
| Vinyl chloride | 24 Hr. | Micrograms/cubic meter (25 C) | 60 | 0.12788 | 0.00639 | 0 | 0 |
| Benzene | 24 Hr. | Micrograms/cubic meter (25 C) | 17 | 1.65153 | 0.64682 | 0 | 0.5541 |
| Benzene | 24 Hr. | Micrograms/cubic meter (25 C) | 60 | 1.43843 | 0.64906 | 0 | 0.586 |
| Benzene | 3 Hr. | Micrograms/cubic meter (25 C) | 13 | 1.59825 | 0.87494 | 0 | 0.8311 |
| Benzene | 24 Hr. | Micrograms/cubic meter (25 C) | 33 | 2.12035 | 0.92844 | 0.28235 | 0.8631 |
| Benzene | 3 Hr. | Micrograms/cubic meter (25 C) | 681 | 2.63179 | 0.44742 | 0 | 0.4049 |
| Benzene | 24 Hr. | Micrograms/cubic meter (25 C) | 59 | 0.95895 | 0.41536 | 0.10655 | 0.3729 |
| Benzene | 24 Hr. | Micrograms/cubic meter (25 C) | 61 | 2.23755 | 1.04628 | 0.2131 | 1.0655 |
| Benzene | 24 Hr. | Micrograms/cubic meter (25 C) | 60 | 4.20873 | 1.00601 | 0 | 0.9057 |
| Benzene | 24 Hr. | Micrograms/cubic meter (25 C) | 59 | 2.07773 | 0.54178 | 0 | 0.4262 |
| Formaldehyde | 3 Hr. | Micrograms/cubic meter (25 C) | 4 | 4.54701 | 3.80966 | 2.58073 | 4.547 |
| Formaldehyde | 24 Hr. | Micrograms/cubic meter (25 C) | 62 | 9.95428 | 2.78688 | 0.12289 | 2.2121 |
| Formaldehyde | 3 Hr. | Micrograms/cubic meter (25 C) | 110 | 19.41699 | 4.17163 | 0 | 4.4241 |
| Formaldehyde | 24 Hr. | Micrograms/cubic meter (25 C) | 3 | 2.21206 | 1.88434 | 1.4747 | 1.9663 |
| Formaldehyde | 24 Hr. | Micrograms/cubic meter (25 C) | 60 | 4.17834 | 1.49314 | 0 | 1.3518 |
| Formaldehyde | 24 Hr. | Micrograms/cubic meter (25 C) | 61 | 69.80286 | 23.85522 | 0 | 4.4241 |
| Formaldehyde | 24 Hr. | Micrograms/cubic meter (25 C) | 59 | 6.3904 | 2.5245 | 0 | 2.4578 |
| Formaldehyde | 24 Hr. | Micrograms/cubic meter (25 C) | 61 | 6.75908 | 1.91389 | 0 | 1.4747 |
| Carbon tetrachloride | 24 Hr. | Micrograms/cubic meter (25 C) | 60 | 1.25896 | 0.66095 | 0 | 0.6295 |
| Carbon tetrachloride | 24 Hr. | Micrograms/cubic meter (25 C) | 58 | 0.62948 | 0.59692 | 0 | 0.6295 |
| Carbon tetrachloride | 24 Hr. | Micrograms/cubic meter (25 C) | 61 | 0.62948 | 0.56756 | 0 | 0.6295 |
| Carbon tetrachloride | 24 Hr. | Micrograms/cubic meter (25 C) | 61 | 0.62948 | 0.59852 | 0 | 0.6295 |
| Carbon tetrachloride | 24 Hr. | Micrograms/cubic meter (25 C) | 60 | 0.62948 | 0.60849 | 0 | 0.6295 |
| Dichloromethane | 24 Hr. | Micrograms/cubic meter (25 C) | 59 | 5.21341 | 1.04268 | 0 | 0.6951 |
| Dichloromethane | 24 Hr. | Micrograms/cubic meter (25 C) | 57 | 0.69512 | 0.55487 | 0.34756 | 0.6951 |
| Dichloromethane | 24 Hr. | Micrograms/cubic meter (25 C) | 60 | 1.39024 | 0.67195 | 0 | 0.6951 |
| Dichloromethane | 24 Hr. | Micrograms/cubic meter (25 C) | 61 | 1.04268 | 0.56977 | 0 | 0.6951 |
| Dichloromethane | 24 Hr. | Micrograms/cubic meter (25 C) | 60 | 1.04268 | 0.50975 | 0 | 0.3476 |
| trans-1,3-Dichloropropene | 24 Hr. | Micrograms/cubic meter (25 C) | 60 | 0.15137 | 0.00252 | 0 | 0 |
| trans-1,3-Dichloropropene | 24 Hr. | Micrograms/cubic meter (25 C) | 59 | 0.15137 | 0.00256 | 0 | 0 |
| trans-1,3-Dichloropropene | 24 Hr. | Micrograms/cubic meter (25 C) | 61 | 0.15137 | 0.00248 | 0 | 0 |
| trans-1,3-Dichloropropene | 24 Hr. | Micrograms/cubic meter (25 C) | 61 | 0 | 0 | 0 | 0 |
| trans-1,3-Dichloropropene | 24 Hr. | Micrograms/cubic meter (25 C) | 60 | 0 | 0 | 0 | 0 |
| 1,2-Dichloropropane | 24 Hr. | Micrograms/cubic meter (25 C) | 60 | 0.15413 | 0.00513 | 0 | 0 |
| 1,2-Dichloropropane | 24 Hr. | Micrograms/cubic meter (25 C) | 59 | 0.15413 | 0.00261 | 0 | 0 |
| 1,2-Dichloropropane | 24 Hr. | Micrograms/cubic meter (25 C) | 61 | 0.15413 | 0.01263 | 0 | 0 |
| 1,2-Dichloropropane | 24 Hr. | Micrograms/cubic meter (25 C) | 61 | 0.15413 | 0.00505 | 0 | 0 |
| 1,2-Dichloropropane | 24 Hr. | Micrograms/cubic meter (25 C) | 60 | 0.15413 | 0.00513 | 0 | 0 |
| Tetrachloroethylene | 24 Hr. | Micrograms/cubic meter (25 C) | 60 | 0.33931 | 0.10744 | 0 | 0 |
| Tetrachloroethylene | 24 Hr. | Micrograms/cubic meter (25 C) | 59 | 0.33931 | 0.04025 | 0 | 0 |
| Tetrachloroethylene | 24 Hr. | Micrograms/cubic meter (25 C) | 61 | 0.67862 | 0.09456 | 0 | 0 |
| Tetrachloroethylene | 24 Hr. | Micrograms/cubic meter (25 C) | 61 | 1.01794 | 0.10568 | 0 | 0 |
| Tetrachloroethylene | 24 Hr. | Micrograms/cubic meter (25 C) | 60 | 0.67862 | 0.07351 | 0 | 0 |
| Ethylene dichloride | 24 Hr. | Micrograms/cubic meter (25 C) | 60 | 0.20248 | 0.04724 | 0 | 0 |
| Ethylene dichloride | 24 Hr. | Micrograms/cubic meter (25 C) | 59 | 0.20248 | 0.03431 | 0 | 0 |
| Ethylene dichloride | 24 Hr. | Micrograms/cubic meter (25 C) | 61 | 0.20248 | 0.09294 | 0 | 0 |

| | | | | | | | |
|---|---|---|---|---|---|---|---|
| Ethylene dichloride | 24 Hr. | Micrograms/cubic meter (25 C) | 61 | 0.20248 | 0.05643 | 0 | 0 |
| Ethylene dichloride | 24 Hr. | Micrograms/cubic meter (25 C) | 60 | 0.20248 | 0.04049 | 0 | 0 |
| Lead (TSP) LC | 24 Hr. | Micrograms/cubic meter (LC) | 12 | 0.045 | 0.01841 | 0.007 | 0.015 |
| Lead (TSP) LC | 24 Hr. | Micrograms/cubic meter (LC) | 40 | 0.152 | 0.0274 | 0.002 | 0.02 |
| Manganese PM2.5 LC | 24 Hr. | Micrograms/cubic meter (LC) | 21 | 0.007 | 0.00204 | 0 | 0.002 |
| Manganese PM2.5 LC | 24 Hr. | Micrograms/cubic meter (LC) | 60 | 0.007 | 0.00171 | 0 | 0.001 |
| Manganese PM2.5 LC | 24 Hr. | Micrograms/cubic meter (LC) | 89 | 0.012 | 0.00131 | 0 | 0.001 |
| Chromium PM2.5 LC | 24 Hr. | Micrograms/cubic meter (LC) | 21 | 0.045 | 0.00338 | 0 | 0 |
| Chromium PM2.5 LC | 24 Hr. | Micrograms/cubic meter (LC) | 60 | 0.128 | 0.00878 | 0 | 0.001 |
| Chromium PM2.5 LC | 24 Hr. | Micrograms/cubic meter (LC) | 89 | 0.104 | 0.00626 | 0 | 0.002 |
| Cadmium PM2.5 LC | 24 Hr. | Micrograms/cubic meter (LC) | 21 | 0.006 | 0.00057 | 0 | 0 |
| Cadmium PM2.5 LC | 24 Hr. | Micrograms/cubic meter (LC) | 60 | 0.027 | 0.0019 | 0 | 0 |
| Cadmium PM2.5 LC | 24 Hr. | Micrograms/cubic meter (LC) | 89 | 0.029 | 0.00205 | 0 | 0 |
| Lead PM2.5 LC | 24 Hr. | Micrograms/cubic meter (LC) | 21 | 0.017 | 0.00333 | 0 | 0.002 |
| Lead PM2.5 LC | 24 Hr. | Micrograms/cubic meter (LC) | 60 | 0.009 | 0.00155 | 0 | 0.001 |
| Lead PM2.5 LC | 24 Hr. | Micrograms/cubic meter (LC) | 89 | 0.039 | 0.00447 | 0 | 0.003 |
| Nickel PM2.5 LC | 24 Hr. | Micrograms/cubic meter (LC) | 21 | 0.004 | 0.00166 | 0 | 0.001 |
| Nickel PM2.5 LC | 24 Hr. | Micrograms/cubic meter (LC) | 60 | 0.004 | 0.00095 | 0 | 0.001 |
| Nickel PM2.5 LC | 24 Hr. | Micrograms/cubic meter (LC) | 89 | 0.015 | 0.00117 | 0 | 0.001 |
| Arsenic PM2.5 LC | 24 Hr. | Micrograms/cubic meter (LC) | 21 | 0.004 | 0.00114 | 0 | 0.001 |
| Arsenic PM2.5 LC | 24 Hr. | Micrograms/cubic meter (LC) | 60 | 0.003 | 0.00066 | 0 | 0 |
| Arsenic PM2.5 LC | 24 Hr. | Micrograms/cubic meter (LC) | 89 | 0.004 | 0.00083 | 0 | 0.001 |
| Manganese (TSP) STP | 24 Hr. | Micrograms/cubic meter (25 C) | 58 | 0.118 | 0.04598 | 0.014 | 0.039 |
| Manganese (TSP) STP | 24 Hr. | Micrograms/cubic meter (25 C) | 58 | 0.076 | 0.02534 | 0.007 | 0.022 |
| Manganese (TSP) STP | 24 Hr. | Micrograms/cubic meter (25 C) | 59 | 0.119 | 0.05544 | 0.021 | 0.053 |
| Manganese (TSP) STP | 24 Hr. | Micrograms/cubic meter (25 C) | 61 | 0.153 | 0.05896 | 0.011 | 0.054 |
| Manganese (TSP) STP | 24 Hr. | Micrograms/cubic meter (25 C) | 58 | 0.099 | 0.03198 | 0.009 | 0.026 |
| Cadmium (TSP) STP | 24 Hr. | Micrograms/cubic meter (25 C) | 58 | 0.0015 | 0.00077 | 0.0003 | 0.0007 |
| Cadmium (TSP) STP | 24 Hr. | Micrograms/cubic meter (25 C) | 58 | 0.002 | 0.00061 | 0.0002 | 0.0005 |
| Cadmium (TSP) STP | 24 Hr. | Micrograms/cubic meter (25 C) | 58 | 0.0041 | 0.00125 | 0.0003 | 0.001 |
| Cadmium (TSP) STP | 24 Hr. | Micrograms/cubic meter (25 C) | 60 | 0.0091 | 0.00211 | 0.0005 | 0.0016 |
| Cadmium (TSP) STP | 24 Hr. | Micrograms/cubic meter (25 C) | 58 | 0.0041 | 0.00079 | 0.0003 | 0.0006 |
| Nickel (TSP) STP | 24 Hr. | Micrograms/cubic meter (25 C) | 58 | 0.02 | 0.00744 | 0.003 | 0.006 |
| Nickel (TSP) STP | 24 Hr. | Micrograms/cubic meter (25 C) | 58 | 0.011 | 0.0042 | 0.001 | 0.004 |
| Nickel (TSP) STP | 24 Hr. | Micrograms/cubic meter (25 C) | 58 | 0.025 | 0.00813 | 0.003 | 0.007 |
| Nickel (TSP) STP | 24 Hr. | Micrograms/cubic meter (25 C) | 61 | 0.024 | 0.00839 | 0.003 | 0.008 |
| Nickel (TSP) STP | 24 Hr. | Micrograms/cubic meter (25 C) | 58 | 0.05 | 0.00841 | 0.002 | 0.007 |
| Lead (TSP) STP | 24 Hr. | Micrograms/cubic meter (25 C) | 58 | 0.0745 | 0.03712 | 0.013 | 0.0321 |
| Lead (TSP) STP | 24 Hr. | Micrograms/cubic meter (25 C) | 58 | 0.0314 | 0.01548 | 0.0067 | 0.0155 |
| Lead (TSP) STP | 24 Hr. | Micrograms/cubic meter (25 C) | 59 | 0.1018 | 0.0459 | 0.0196 | 0.0462 |
| Lead (TSP) STP | 24 Hr. | Micrograms/cubic meter (25 C) | 61 | 0.1012 | 0.03899 | 0.0147 | 0.0341 |
| Lead (TSP) STP | 24 Hr. | Micrograms/cubic meter (25 C) | 58 | 0.0533 | 0.0196 | 0.0054 | 0.0171 |
| Chromium (TSP) STP | 24 Hr. | Micrograms/cubic meter (25 C) | 58 | 0.018 | 0.01246 | 0.009 | 0.012 |
| Chromium (TSP) STP | 24 Hr. | Micrograms/cubic meter (25 C) | 58 | 0.014 | 0.01043 | 0.008 | 0.01 |
| Chromium (TSP) STP | 24 Hr. | Micrograms/cubic meter (25 C) | 59 | 0.021 | 0.01444 | 0.011 | 0.015 |
| Chromium (TSP) STP | 24 Hr. | Micrograms/cubic meter (25 C) | 61 | 0.033 | 0.01483 | 0.009 | 0.014 |
| Chromium (TSP) STP | 24 Hr. | Micrograms/cubic meter (25 C) | 58 | 0.017 | 0.01134 | 0.009 | 0.011 |
| Arsenic (TSP) STP | 24 Hr. | Micrograms/cubic meter (25 C) | 58 | 0.01 | 0.00189 | 0 | 0 |
| Arsenic (TSP) STP | 24 Hr. | Micrograms/cubic meter (25 C) | 58 | 0.01 | 0.00155 | 0 | 0 |

| | | | | | | | |
|---|---|---|---|---|---|---|---|
| Arsenic (TSP) STP | 24 Hr. | Micrograms/cubic meter (25 C) | 59 | 0.01 | 0.0022 | 0 | 0 |
| Arsenic (TSP) STP | 24 Hr. | Micrograms/cubic meter (25 C) | 61 | 0.01 | 0.00262 | 0 | 0 |
| Arsenic (TSP) STP | 24 Hr. | Micrograms/cubic meter (25 C) | 58 | 0.01 | 0.00189 | 0 | 0 |
| Beryllium (TSP) STP | 24 Hr. | Nanograms/cubic meter (25 C) | 58 | 0.2 | 0.03103 | 0 | 0 |
| Beryllium (TSP) STP | 24 Hr. | Nanograms/cubic meter (25 C) | 58 | 0.1 | 0.00172 | 0 | 0 |
| Beryllium (TSP) STP | 24 Hr. | Nanograms/cubic meter (25 C) | 59 | 0.1 | 0.04067 | 0 | 0 |
| Beryllium (TSP) STP | 24 Hr. | Nanograms/cubic meter (25 C) | 61 | 0.1 | 0.0377 | 0 | 0 |
| Beryllium (TSP) STP | 24 Hr. | Nanograms/cubic meter (25 C) | 58 | 0.1 | 0.00689 | 0 | 0 |

**Total HAPs for 2014**
**Philadelphia County, PA**

| Parameter Name | Duration | Units of Measure | Obs | Max | Mean | Min | Median |
|---|---|---|---|---|---|---|---|
| Arsenic (TSP) STP | 24 Hr. | Micrograms/cubic meter (25 C) | 58 | 0.01 | 0.00051 | 0 | 0 |
| Arsenic (TSP) STP | 24 Hr. | Micrograms/cubic meter (25 C) | 56 | 0.01 | 0.00035 | 0 | 0 |
| Arsenic (TSP) STP | 24 Hr. | Micrograms/cubic meter (25 C) | 59 | 0.01 | 0.00067 | 0 | 0 |
| Arsenic (TSP) STP | 24 Hr. | Micrograms/cubic meter (25 C) | 61 | 0.01 | 0.00065 | 0 | 0 |
| Arsenic (TSP) STP | 24 Hr. | Micrograms/cubic meter (25 C) | 59 | 0.01 | 0.00101 | 0 | 0 |
| Beryllium (TSP) STP | 24 Hr. | Nanograms/cubic meter (25 C) | 58 | 0.2 | 0.00862 | 0 | 0 |
| Beryllium (TSP) STP | 24 Hr. | Nanograms/cubic meter (25 C) | 56 | 0.1 | 0.01428 | 0 | 0 |
| Beryllium (TSP) STP | 24 Hr. | Nanograms/cubic meter (25 C) | 59 | 0.1 | 0.01525 | 0 | 0 |
| Beryllium (TSP) STP | 24 Hr. | Nanograms/cubic meter (25 C) | 61 | 0.1 | 0.00327 | 0 | 0 |
| Beryllium (TSP) STP | 24 Hr. | Nanograms/cubic meter (25 C) | 59 | 0.1 | 0.01186 | 0 | 0 |
| Cadmium (TSP) STP | 24 Hr. | Micrograms/cubic meter (25 C) | 58 | 0.0032 | 0.0009 | 0.0002 | 0.0007 |
| Cadmium (TSP) STP | 24 Hr. | Micrograms/cubic meter (25 C) | 56 | 0.0114 | 0.00178 | 0.0004 | 0.0013 |
| Cadmium (TSP) STP | 24 Hr. | Micrograms/cubic meter (25 C) | 59 | 0.007 | 0.00156 | 0.0003 | 0.0011 |
| Cadmium (TSP) STP | 24 Hr. | Micrograms/cubic meter (25 C) | 61 | 0.0025 | 0.00057 | 0.0001 | 0.0004 |
| Cadmium (TSP) STP | 24 Hr. | Micrograms/cubic meter (25 C) | 59 | 0.0027 | 0.00066 | 0.0002 | 0.0006 |
| Chromium (TSP) STP | 24 Hr. | Micrograms/cubic meter (25 C) | 58 | 0.028 | 0.01172 | 0.009 | 0.011 |
| Chromium (TSP) STP | 24 Hr. | Micrograms/cubic meter (25 C) | 55 | 0.022 | 0.01285 | 0.01 | 0.013 |
| Chromium (TSP) STP | 24 Hr. | Micrograms/cubic meter (25 C) | 59 | 0.037 | 0.01472 | 0.01 | 0.014 |
| Chromium (TSP) STP | 24 Hr. | Micrograms/cubic meter (25 C) | 61 | 0.013 | 0.00995 | 0.008 | 0.01 |
| Chromium (TSP) STP | 24 Hr. | Micrograms/cubic meter (25 C) | 59 | 0.022 | 0.01198 | 0.009 | 0.011 |
| Lead (TSP) STP | 24 Hr. | Micrograms/cubic meter (25 C) | 57 | 0.0616 | 0.02023 | 0.0031 | 0.0155 |
| Lead (TSP) STP | 24 Hr. | Micrograms/cubic meter (25 C) | 56 | 0.0657 | 0.03296 | 0.008 | 0.0318 |
| Lead (TSP) STP | 24 Hr. | Micrograms/cubic meter (25 C) | 59 | 0.1013 | 0.04563 | 0.0115 | 0.0407 |
| Lead (TSP) STP | 24 Hr. | Micrograms/cubic meter (25 C) | 61 | 0.0312 | 0.01403 | 0.0025 | 0.0136 |
| Lead (TSP) STP | 24 Hr. | Micrograms/cubic meter (25 C) | 59 | 0.1102 | 0.03312 | 0.0051 | 0.0288 |
| Manganese (TSP) STP | 24 Hr. | Micrograms/cubic meter (25 C) | 58 | 0.095 | 0.04098 | 0.006 | 0.037 |
| Manganese (TSP) STP | 24 Hr. | Micrograms/cubic meter (25 C) | 56 | 0.114 | 0.05144 | 0.011 | 0.048 |
| Manganese (TSP) STP | 24 Hr. | Micrograms/cubic meter (25 C) | 59 | 0.151 | 0.05794 | 0.017 | 0.052 |
| Manganese (TSP) STP | 24 Hr. | Micrograms/cubic meter (25 C) | 61 | 0.058 | 0.0248 | 0.004 | 0.023 |
| Manganese (TSP) STP | 24 Hr. | Micrograms/cubic meter (25 C) | 59 | 0.148 | 0.0431 | 0.008 | 0.038 |
| Nickel (TSP) STP | 24 Hr. | Micrograms/cubic meter (25 C) | 58 | 0.033 | 0.00736 | 0.002 | 0.006 |
| Nickel (TSP) STP | 24 Hr. | Micrograms/cubic meter (25 C) | 56 | 0.068 | 0.00975 | 0.003 | 0.007 |
| Nickel (TSP) STP | 24 Hr. | Micrograms/cubic meter (25 C) | 59 | 0.068 | 0.00949 | 0.004 | 0.008 |
| Nickel (TSP) STP | 24 Hr. | Micrograms/cubic meter (25 C) | 61 | 0.011 | 0.00468 | 0.002 | 0.004 |
| Nickel (TSP) STP | 24 Hr. | Micrograms/cubic meter (25 C) | 59 | 0.017 | 0.00733 | 0.003 | 0.007 |
| Lead (TSP) LC | 24 Hr. | Micrograms/cubic meter (LC) | 58 | 0.098 | 0.01398 | 0.002 | 0.01 |
| 1,3-Butadiene | 24 Hr. | Micrograms/cubic meter (25 C) | 61 | 0.8854 | 0.039 | 0 | 0 |
| 1,3-Butadiene | 24 Hr. | Micrograms/cubic meter (25 C) | 59 | 6.3086 | 0.15663 | 0 | 0 |
| 1,3-Butadiene | 24 Hr. | Micrograms/cubic meter (25 C) | 60 | 1.8815 | 0.0747 | 0 | 0 |
| 1,3-Butadiene | 24 Hr. | Micrograms/cubic meter (25 C) | 61 | 1.5495 | 0.0762 | 0 | 0 |
| 1,3-Butadiene | 24 Hr. | Micrograms/cubic meter (25 C) | 61 | 1.9368 | 0.04989 | 0 | 0 |
| Formaldehyde | 24 Hr. | Micrograms/cubic meter (25 C) | 62 | 7.4964 | 2.17836 | 0 | 1.84338 |
| Formaldehyde | 24 Hr. | Micrograms/cubic meter (25 C) | 61 | 8.3567 | 2.77212 | 0.36867 | 2.58073 |
| Formaldehyde | 24 Hr. | Micrograms/cubic meter (25 C) | 61 | 6.2675 | 1.59558 | 0.36867 | 1.35181 |
| Formaldehyde | 24 Hr. | Micrograms/cubic meter (25 C) | 62 | 4.4241 | 1.68283 | 0.24578 | 1.4747 |

| | | | | | | | |
|---|---|---|---|---|---|---|---|
| Formaldehyde | 24 Hr. | Micrograms/cubic meter (25 C) | 61 | 6.2675 | 2.00052 | 0.12289 | 1.72049 |
| Formaldehyde | 3 Hr.S | Micrograms/cubic meter (25 C) | 127 | 15.239 | 4.93795 | 0.49156 | 4.7928 |
| Acetaldehyde | 24 Hr. | Micrograms/cubic meter (25 C) | 62 | 4.9573 | 2.2228 | 0 | 2.1632 |
| Acetaldehyde | 24 Hr. | Micrograms/cubic meter (25 C) | 61 | 6.8501 | 2.38779 | 0.99146 | 2.25333 |
| Acetaldehyde | 24 Hr. | Micrograms/cubic meter (25 C) | 61 | 4.5968 | 1.66081 | 0.18026 | 1.71253 |
| Acetaldehyde | 24 Hr. | Micrograms/cubic meter (25 C) | 62 | 3.3349 | 1.80266 | 0.2704 | 1.80266 |
| Acetaldehyde | 24 Hr. | Micrograms/cubic meter (25 C) | 61 | 9.464 | 2.32425 | 0.63093 | 2.25333 |
| Acetaldehyde | 3 Hr.S | Micrograms/cubic meter (25 C) | 127 | 23.795 | 3.05104 | 1.26186 | 2.61386 |
| Acrylonitrile | 24 Hr. | Micrograms/cubic meter (25 C) | 61 | 0.7238 | 0.1934 | 0 | 0.14475 |
| Acrylonitrile | 24 Hr. | Micrograms/cubic meter (25 C) | 59 | 2.099 | 0.73483 | 0 | 0.65141 |
| Acrylonitrile | 24 Hr. | Micrograms/cubic meter (25 C) | 60 | 2.9676 | 0.79376 | 0.14475 | 0.65141 |
| Acrylonitrile | 24 Hr. | Micrograms/cubic meter (25 C) | 61 | 1.3028 | 0.47461 | 0 | 0.43427 |
| Acrylonitrile | 24 Hr. | Micrograms/cubic meter (25 C) | 61 | 1.8819 | 0.83414 | 0.14475 | 0.79617 |
| Dichloromethane | 24 Hr. | Micrograms/cubic meter (25 C) | 61 | 1.3902 | 0.62674 | 0.34756 | 0.69512 |
| Dichloromethane | 24 Hr. | Micrograms/cubic meter (25 C) | 59 | 1.7378 | 0.67155 | 0.34756 | 0.69512 |
| Dichloromethane | 24 Hr. | Micrograms/cubic meter (25 C) | 60 | 2.0854 | 0.75884 | 0.34756 | 0.69512 |
| Dichloromethane | 24 Hr. | Micrograms/cubic meter (25 C) | 61 | 1.0427 | 0.62105 | 0.34756 | 0.69512 |
| Dichloromethane | 24 Hr. | Micrograms/cubic meter (25 C) | 60 | 1.7378 | 0.77042 | 0.34756 | 0.69512 |
| Chloroform | 24 Hr. | Micrograms/cubic meter (25 C) | 61 | 0.4885 | 0.16818 | 0 | 0 |
| Chloroform | 24 Hr. | Micrograms/cubic meter (25 C) | 59 | 0.4885 | 0.0828 | 0 | 0 |
| Chloroform | 24 Hr. | Micrograms/cubic meter (25 C) | 60 | 0.4885 | 0.10585 | 0 | 0 |
| Chloroform | 24 Hr. | Micrograms/cubic meter (25 C) | 61 | 0.4885 | 0.12814 | 0 | 0 |
| Chloroform | 24 Hr. | Micrograms/cubic meter (25 C) | 61 | 1.9542 | 0.30433 | 0 | 0.48854 |
| Carbon tetrachloride | 24 Hr. | Micrograms/cubic meter (25 C) | 61 | 1.259 | 0.71203 | 0 | 0.62948 |
| Carbon tetrachloride | 24 Hr. | Micrograms/cubic meter (25 C) | 59 | 1.259 | 0.71483 | 0 | 0.62948 |
| Carbon tetrachloride | 24 Hr. | Micrograms/cubic meter (25 C) | 60 | 1.259 | 0.71341 | 0.62948 | 0.62948 |
| Carbon tetrachloride | 24 Hr. | Micrograms/cubic meter (25 C) | 61 | 1.259 | 0.71203 | 0.62948 | 0.62948 |
| Carbon tetrachloride | 24 Hr. | Micrograms/cubic meter (25 C) | 61 | 1.259 | 0.74299 | 0.62948 | 0.62948 |
| Ethylene dichloride | 24 Hr. | Micrograms/cubic meter (25 C) | 60 | 0.2025 | 0.02024 | 0 | 0 |
| Ethylene dichloride | 24 Hr. | Micrograms/cubic meter (25 C) | 59 | 0.2025 | 0.03088 | 0 | 0 |
| Ethylene dichloride | 24 Hr. | Micrograms/cubic meter (25 C) | 60 | 0.2025 | 0.03374 | 0 | 0 |
| Ethylene dichloride | 24 Hr. | Micrograms/cubic meter (25 C) | 61 | 0.2025 | 0.02655 | 0 | 0 |
| Ethylene dichloride | 24 Hr. | Micrograms/cubic meter (25 C) | 61 | 0.2025 | 0.03983 | 0 | 0 |
| Tetrachloroethylene | 24 Hr. | Micrograms/cubic meter (25 C) | 61 | 0.3393 | 0.05006 | 0 | 0 |
| Tetrachloroethylene | 24 Hr. | Micrograms/cubic meter (25 C) | 59 | 0.6786 | 0.05751 | 0 | 0 |
| Tetrachloroethylene | 24 Hr. | Micrograms/cubic meter (25 C) | 60 | 0.3393 | 0.05655 | 0 | 0 |
| Tetrachloroethylene | 24 Hr. | Micrograms/cubic meter (25 C) | 61 | 0.3393 | 0.05006 | 0 | 0 |
| Tetrachloroethylene | 24 Hr. | Micrograms/cubic meter (25 C) | 61 | 0.3393 | 0.08343 | 0 | 0 |
| 1,1,2,2-Tetrachloroethane | 24 Hr. | Micrograms/cubic meter (25 C) | 61 | 0.3434 | 0.00563 | 0 | 0 |
| 1,1,2,2-Tetrachloroethane | 24 Hr. | Micrograms/cubic meter (25 C) | 59 | 0.3434 | 0.00582 | 0 | 0 |
| 1,1,2,2-Tetrachloroethane | 24 Hr. | Micrograms/cubic meter (25 C) | 60 | 0.3434 | 0.01144 | 0 | 0 |
| 1,1,2,2-Tetrachloroethane | 24 Hr. | Micrograms/cubic meter (25 C) | 61 | 0.3434 | 0.01126 | 0 | 0 |
| 1,1,2,2-Tetrachloroethane | 24 Hr. | Micrograms/cubic meter (25 C) | 61 | 0.3434 | 0.00563 | 0 | 0 |
| Trichloroethylene | 24 Hr. | Micrograms/cubic meter (25 C) | 61 | 0.5377 | 0.01322 | 0 | 0 |
| Trichloroethylene | 24 Hr. | Micrograms/cubic meter (25 C) | 59 | 1.3442 | 0.06379 | 0 | 0 |
| Trichloroethylene | 24 Hr. | Micrograms/cubic meter (25 C) | 60 | 0.5377 | 0.02688 | 0 | 0 |
| Trichloroethylene | 24 Hr. | Micrograms/cubic meter (25 C) | 61 | 0.2688 | 0.01322 | 0 | 0 |
| Trichloroethylene | 24 Hr. | Micrograms/cubic meter (25 C) | 61 | 0.5377 | 0.02644 | 0 | 0 |
| 1,2-Dichloropropane | 24 Hr. | Micrograms/cubic meter (25 C) | 61 | 0.1541 | 0.00505 | 0 | 0 |

| | | | | | | | |
|---|---|---|---|---|---|---|---|
| 1,2-Dichloropropane | 24 Hr. | Micrograms/cubic meter (25 C) | 59 | 0.1541 | 0.00522 | 0 | 0 |
| 1,2-Dichloropropane | 24 Hr. | Micrograms/cubic meter (25 C) | 60 | 0.1541 | 0.01027 | 0 | 0 |
| 1,2-Dichloropropane | 24 Hr. | Micrograms/cubic meter (25 C) | 61 | 0.1541 | 0.00505 | 0 | 0 |
| 1,2-Dichloropropane | 24 Hr. | Micrograms/cubic meter (25 C) | 61 | 0.1541 | 0.00505 | 0 | 0 |
| trans-1,3-Dichloropropene | 24 Hr. | Micrograms/cubic meter (25 C) | 61 | 0 | 0 | 0 | 0 |
| trans-1,3-Dichloropropene | 24 Hr. | Micrograms/cubic meter (25 C) | 59 | 0 | 0 | 0 | 0 |
| trans-1,3-Dichloropropene | 24 Hr. | Micrograms/cubic meter (25 C) | 60 | 0 | 0 | 0 | 0 |
| trans-1,3-Dichloropropene | 24 Hr. | Micrograms/cubic meter (25 C) | 61 | 0 | 0 | 0 | 0 |
| trans-1,3-Dichloropropene | 24 Hr. | Micrograms/cubic meter (25 C) | 61 | 0 | 0 | 0 | 0 |
| cis-1,3-Dichloropropene | 24 Hr. | Micrograms/cubic meter (25 C) | 61 | 0 | 0 | 0 | 0 |
| cis-1,3-Dichloropropene | 24 Hr. | Micrograms/cubic meter (25 C) | 59 | 0 | 0 | 0 | 0 |
| cis-1,3-Dichloropropene | 24 Hr. | Micrograms/cubic meter (25 C) | 60 | 0 | 0 | 0 | 0 |
| cis-1,3-Dichloropropene | 24 Hr. | Micrograms/cubic meter (25 C) | 61 | 0 | 0 | 0 | 0 |
| cis-1,3-Dichloropropene | 24 Hr. | Micrograms/cubic meter (25 C) | 61 | 0 | 0 | 0 | 0 |
| Ethylene dibromide | 24 Hr. | Micrograms/cubic meter (25 C) | 61 | 0.3844 | 0.0063 | 0 | 0 |
| Ethylene dibromide | 24 Hr. | Micrograms/cubic meter (25 C) | 59 | 0.3844 | 0.00651 | 0 | 0 |
| Ethylene dibromide | 24 Hr. | Micrograms/cubic meter (25 C) | 60 | 0.3844 | 0.0064 | 0 | 0 |
| Ethylene dibromide | 24 Hr. | Micrograms/cubic meter (25 C) | 61 | 0 | 0 | 0 | 0 |
| Ethylene dibromide | 24 Hr. | Micrograms/cubic meter (25 C) | 61 | 0 | 0 | 0 | 0 |
| Vinyl chloride | 24 Hr. | Micrograms/cubic meter (25 C) | 61 | 0.1279 | 0.00209 | 0 | 0 |
| Vinyl chloride | 24 Hr. | Micrograms/cubic meter (25 C) | 59 | 0 | 0 | 0 | 0 |
| Vinyl chloride | 24 Hr. | Micrograms/cubic meter (25 C) | 60 | 0 | 0 | 0 | 0 |
| Vinyl chloride | 24 Hr. | Micrograms/cubic meter (25 C) | 61 | 0 | 0 | 0 | 0 |
| Vinyl chloride | 24 Hr. | Micrograms/cubic meter (25 C) | 61 | 0.1279 | 0.00209 | 0 | 0 |
| Benzene | 24 Hr. | Micrograms/cubic meter (25 C) | 60 | 2.7703 | 0.63841 | 0.2131 | 0.4262 |
| Benzene | 24 Hr. | Micrograms/cubic meter (25 C) | 59 | 4.6349 | 1.02306 | 0.26637 | 0.69257 |
| Benzene | 24 Hr. | Micrograms/cubic meter (25 C) | 60 | 3.1432 | 1.06639 | 0.37292 | 0.8524 |
| Benzene | 24 Hr. | Micrograms/cubic meter (25 C) | 61 | 1.8646 | 0.45589 | 0.10655 | 0.31965 |
| Benzene | 24 Hr. | Micrograms/cubic meter (25 C) | 32 | 1.0548 | 0.4252 | 0 | 0.41021 |
| Benzene | 24 Hr. | Micrograms/cubic meter (25 C) | 61 | 3.4096 | 0.77729 | 0.26637 | 0.58602 |
| Benzene | 24 Hr. | Micrograms/cubic meter (25 C) | 18 | 0.8737 | 0.27377 | 0 | 0.28235 |
| Benzene | 3 Hr.S | Micrograms/cubic meter (25 C) | 650 | 1.7847 | 0.21156 | 0 | 0.25039 |
| Benzene | 3 Hr.S | Micrograms/cubic meter (25 C) | 14 | 1.1987 | 0.45207 | 0 | 0.40489 |
| Arsenic PM2.5 LC | 24 Hr. | Micrograms/cubic meter (LC) | 61 | 0.003 | 0.00042 | 0 | 0 |
| Arsenic PM2.5 LC | 24 Hr. | Micrograms/cubic meter (LC) | 117 | 0.004 | 0.00057 | 0 | 0 |
| Cadmium PM2.5 LC | 24 Hr. | Micrograms/cubic meter (LC) | 61 | 0.019 | 0.00181 | 0 | 0 |
| Cadmium PM2.5 LC | 24 Hr. | Micrograms/cubic meter (LC) | 117 | 0.023 | 0.00112 | 0 | 0 |
| Chromium PM2.5 LC | 24 Hr. | Micrograms/cubic meter (LC) | 61 | 0.003 | 0.0007 | 0 | 0 |
| Chromium PM2.5 LC | 24 Hr. | Micrograms/cubic meter (LC) | 117 | 0.031 | 0.00205 | 0 | 0.001 |
| Lead PM2.5 LC | 24 Hr. | Micrograms/cubic meter (LC) | 61 | 0.009 | 0.00113 | 0 | 0 |
| Lead PM2.5 LC | 24 Hr. | Micrograms/cubic meter (LC) | 117 | 0.028 | 0.00183 | 0 | 0.001 |
| Manganese PM2.5 LC | 24 Hr. | Micrograms/cubic meter (LC) | 61 | 0.006 | 0.00129 | 0 | 0.001 |
| Manganese PM2.5 LC | 24 Hr. | Micrograms/cubic meter (LC) | 117 | 0.008 | 0.00145 | 0 | 0.001 |
| Nickel PM2.5 LC | 24 Hr. | Micrograms/cubic meter (LC) | 61 | 0.035 | 0.00131 | 0 | 0 |
| Nickel PM2.5 LC | 24 Hr. | Micrograms/cubic meter (LC) | 117 | 0.015 | 0.00135 | 0 | 0.001 |

**Total HAPs for 2015**
**Philadelphia County, PA**

| Parameter Name | Duration | Units of Measure | Max | Mean | Min | Median |
|---|---|---|---|---|---|---|
| Benzo[a]pyrene (TSP) STP | 24 Hr. | Nanograms/cubic meter (25 C) | 0.18 | 0.0672 | 0.04 | 0.05 |
| Nickel (TSP) STP | 24 Hr. | Micrograms/cubic meter (25 C) | 0.007 | 0.0014 | 0.001 | 0.001 |
| Manganese (TSP) STP | 24 Hr. | Micrograms/cubic meter (25 C) | 0.03 | 0.0106 | 0.003 | 0.009 |
| Lead (TSP) STP | 24 Hr. | Micrograms/cubic meter (25 C) | 0.0121 | 0.0049 | 0.0019 | 0.0043 |
| Chromium (TSP) STP | 24 Hr. | Micrograms/cubic meter (25 C) | 0.004 | 0.0027 | 0.002 | 0.003 |
| Cadmium (TSP) STP | 24 Hr. | Micrograms/cubic meter (25 C) | 0.0013 | 0.0002 | 0 | 0.0001 |
| Beryllium (TSP) STP | 24 Hr. | Nanograms/cubic meter (25 C) | 0.013 | 0.0027 | 0 | 0 |
| Arsenic (TSP) STP | 24 Hr. | Micrograms/cubic meter (25 C) | 0.002 | 0.0002 | 0 | 0 |
| Acetaldehyde | 24 Hr. | Micrograms/cubic meter (25 C) | 4.8672 | 2.6979 | 0.90133 | 2.34346 |
| Benzene | 24 Hr. | Micrograms/cubic meter (25 C) | 3.1432 | 0.7486 | 0.2131 | 0.58602 |
| Vinyl chloride | 24 Hr. | Micrograms/cubic meter (25 C) | 0.2558 | 0.0087 | 0 | 0 |
| Ethylene dibromide | 24 Hr. | Micrograms/cubic meter (25 C) | 0 | 0 | 0 | 0 |
| cis-1,3-Dichloropropene | 24 Hr. | Micrograms/cubic meter (25 C) | 0 | 0 | 0 | 0 |
| trans-1,3-Dichloropropene | 24 Hr. | Micrograms/cubic meter (25 C) | 0 | 0 | 0 | 0 |
| 1,2-Dichloropropane | 24 Hr. | Micrograms/cubic meter (25 C) | 0 | 0 | 0 | 0 |
| Trichloroethylene | 24 Hr. | Micrograms/cubic meter (25 C) | 0 | 0 | 0 | 0 |
| 1,1,2,2-Tetrachloroethane | 24 Hr. | Micrograms/cubic meter (25 C) | 0 | 0 | 0 | 0 |
| Tetrachloroethylene | 24 Hr. | Micrograms/cubic meter (25 C) | 0.3393 | 0.0633 | 0 | 0 |
| Ethylene dichloride | 24 Hr. | Micrograms/cubic meter (25 C) | 0.2025 | 0.0103 | 0 | 0 |
| Carbon tetrachloride | 24 Hr. | Micrograms/cubic meter (25 C) | 1.259 | 0.6401 | 0.62948 | 0.62948 |
| Chloroform | 24 Hr. | Micrograms/cubic meter (25 C) | 0.9771 | 0.149 | 0 | 0 |
| Dichloromethane | 24 Hr. | Micrograms/cubic meter (25 C) | 1.0427 | 0.6126 | 0.34756 | 0.69512 |
| Acrylonitrile | 24 Hr. | Micrograms/cubic meter (25 C) | 0.7962 | 0.3349 | 0 | 0.36189 |
| 1,3-Butadiene | 24 Hr. | Micrograms/cubic meter (25 C) | 0.8854 | 0.0506 | 0 | 0 |
| Formaldehyde | 24 Hr. | Micrograms/cubic meter (25 C) | 7.0049 | 3.2148 | 1.10603 | 2.94941 |
| Nickel (TSP) STP | 24 Hr. | Micrograms/cubic meter (25 C) | 0.005 | 0.0015 | 0.001 | 0.001 |
| Manganese (TSP) STP | 24 Hr. | Micrograms/cubic meter (25 C) | 0.042 | 0.013 | 0.003 | 0.011 |
| Lead (TSP) STP | 24 Hr. | Micrograms/cubic meter (25 C) | 0.0192 | 0.0073 | 0.0024 | 0.006 |
| Beryllium (TSP) STP | 24 Hr. | Nanograms/cubic meter (25 C) | 0.027 | 0.0045 | 0 | 0.001 |
| Chromium (TSP) STP | 24 Hr. | Micrograms/cubic meter (25 C) | 0.005 | 0.0031 | 0.002 | 0.003 |
| Cadmium (TSP) STP | 24 Hr. | Micrograms/cubic meter (25 C) | 0.0013 | 0.0002 | 0 | 0.0002 |
| Arsenic (TSP) STP | 24 Hr. | Micrograms/cubic meter (25 C) | 0.002 | 0.0004 | 0 | 0 |
| Nickel PM2.5 LC | 24 Hr. | Micrograms/cubic meter (LC) | 0.032 | 0.0013 | 0 | 0 |
| Manganese PM2.5 LC | 24 Hr. | Micrograms/cubic meter (LC) | 0.007 | 0.0017 | 0 | 0.001 |
| Lead PM2.5 LC | 24 Hr. | Micrograms/cubic meter (LC) | 0.006 | 0.0011 | 0 | 0.001 |
| Chromium PM2.5 LC | 24 Hr. | Micrograms/cubic meter (LC) | 0.09 | 0.0033 | 0 | 0 |
| Cadmium PM2.5 LC | 24 Hr. | Micrograms/cubic meter (LC) | 0.009 | 0.0008 | 0 | 0 |
| Arsenic PM2.5 LC | 24 Hr. | Micrograms/cubic meter (LC) | 0.004 | 0.0005 | 0 | 0 |
| Trichloroethylene | 24 Hr. | Micrograms/cubic meter (25 C) | 0.2688 | 0.0091 | 0 | 0 |
| Benzene | 24 Hr. | Micrograms/cubic meter (25 C) | 7.2987 | 1.1395 | 0.26637 | 0.90567 |
| Vinyl chloride | 24 Hr. | Micrograms/cubic meter (25 C) | 0.1279 | 0.0022 | 0 | 0 |
| cis-1,3-Dichloropropene | 24 Hr. | Micrograms/cubic meter (25 C) | 0 | 0 | 0 | 0 |
| Ethylene dibromide | 24 Hr. | Micrograms/cubic meter (25 C) | 0 | 0 | 0 | 0 |
| trans-1,3-Dichloropropene | 24 Hr. | Micrograms/cubic meter (25 C) | 0 | 0 | 0 | 0 |
| 1,2-Dichloropropane | 24 Hr. | Micrograms/cubic meter (25 C) | 0 | 0 | 0 | 0 |

| | | | | | | |
|---|---|---|---|---|---|---|
| 1,1,2,2-Tetrachloroethane | 24 Hr. | Micrograms/cubic meter (25 C) | 0 | 0 | 0 | 0 |
| Tetrachloroethylene | 24 Hr. | Micrograms/cubic meter (25 C) | 0.3393 | 0.0575 | 0 | 0 |
| Ethylene dichloride | 24 Hr. | Micrograms/cubic meter (25 C) | 0.405 | 0.0275 | 0 | 0 |
| Acetaldehyde | 24 Hr. | Micrograms/cubic meter (25 C) | 5.1376 | 2.6977 | 0.36053 | 2.4336 |
| Carbon tetrachloride | 24 Hr. | Micrograms/cubic meter (25 C) | 1.259 | 0.6722 | 0.62948 | 0.62948 |
| Chloroform | 24 Hr. | Micrograms/cubic meter (25 C) | 0.4885 | 0.0166 | 0 | 0 |
| Dichloromethane | 24 Hr. | Micrograms/cubic meter (25 C) | 1.0427 | 0.6244 | 0.34756 | 0.69512 |
| Acrylonitrile | 24 Hr. | Micrograms/cubic meter (25 C) | 2.099 | 0.8771 | 0 | 0.79617 |
| 1,3-Butadiene | 24 Hr. | Micrograms/cubic meter (25 C) | 1.9368 | 0.1482 | 0 | 0 |
| Formaldehyde | 24 Hr. | Micrograms/cubic meter (25 C) | 9.094 | 3.8354 | 0 | 3.68677 |
| Nickel PM2.5 LC | 24 Hr. | Micrograms/cubic meter (LC) | 0.062 | 0.002 | 0 | 0.001 |
| Manganese PM2.5 LC | 24 Hr. | Micrograms/cubic meter (LC) | 0.02 | 0.0017 | 0 | 0.001 |
| Lead PM2.5 LC | 24 Hr. | Micrograms/cubic meter (LC) | 0.054 | 0.0026 | 0 | 0.001 |
| Chromium PM2.5 LC | 24 Hr. | Micrograms/cubic meter (LC) | 0.197 | 0.0047 | 0 | 0.001 |
| Cadmium PM2.5 LC | 24 Hr. | Micrograms/cubic meter (LC) | 0.026 | 0.0019 | 0 | 0 |
| Arsenic PM2.5 LC | 24 Hr. | Micrograms/cubic meter (LC) | 0.004 | 0.0006 | 0 | 0 |
| Lead (TSP) LC | 24 Hr. | Micrograms/cubic meter (LC) | 0.067 | 0.0184 | 0.003 | 0.014 |
| Cadmium (TSP) STP | 24 Hr. | Micrograms/cubic meter (25 C) | 0.0011 | 0.0004 | 0.0001 | 0.0003 |
| Chromium (TSP) STP | 24 Hr. | Micrograms/cubic meter (25 C) | 0.005 | 0.0034 | 0.003 | 0.003 |
| Beryllium (TSP) STP | 24 Hr. | Nanograms/cubic meter (25 C) | 0 | 0 | 0 | 0 |
| Manganese (TSP) STP | 24 Hr. | Micrograms/cubic meter (25 C) | 0.033 | 0.0138 | 0.005 | 0.012 |
| Nickel (TSP) STP | 24 Hr. | Micrograms/cubic meter (25 C) | 0.004 | 0.0016 | 0.001 | 0.001 |
| Arsenic (TSP) STP | 24 Hr. | Micrograms/cubic meter (25 C) | 0 | 0 | 0 | 0 |
| Acrylonitrile | 24 Hr. | Micrograms/cubic meter (25 C) | 1.4476 | 0.7946 | 0.21713 | 0.79617 |
| Benzene | 24 Hr. | Micrograms/cubic meter (25 C) | 1.6515 | 0.8832 | 0.4262 | 0.8524 |
| Vinyl chloride | 24 Hr. | Micrograms/cubic meter (25 C) | 0.1279 | 0.0028 | 0 | 0 |
| Ethylene dibromide | 24 Hr. | Micrograms/cubic meter (25 C) | 0 | 0 | 0 | 0 |
| cis-1,3-Dichloropropene | 24 Hr. | Micrograms/cubic meter (25 C) | 0 | 0 | 0 | 0 |
| trans-1,3-Dichloropropene | 24 Hr. | Micrograms/cubic meter (25 C) | 0 | 0 | 0 | 0 |
| 1,2-Dichloropropane | 24 Hr. | Micrograms/cubic meter (25 C) | 0 | 0 | 0 | 0 |
| Trichloroethylene | 24 Hr. | Micrograms/cubic meter (25 C) | 0.2688 | 0.0179 | 0 | 0 |
| 1,1,2,2-Tetrachloroethane | 24 Hr. | Micrograms/cubic meter (25 C) | 0 | 0 | 0 | 0 |
| Tetrachloroethylene | 24 Hr. | Micrograms/cubic meter (25 C) | 0.3393 | 0.0226 | 0 | 0 |
| Ethylene dichloride | 24 Hr. | Micrograms/cubic meter (25 C) | 0.2025 | 0.0135 | 0 | 0 |
| Carbon tetrachloride | 24 Hr. | Micrograms/cubic meter (25 C) | 1.259 | 0.6854 | 0.62948 | 0.62948 |
| Chloroform | 24 Hr. | Micrograms/cubic meter (25 C) | 0.9771 | 0.0977 | 0 | 0 |
| Dichloromethane | 24 Hr. | Micrograms/cubic meter (25 C) | 4.1707 | 0.7724 | 0.34756 | 0.69512 |
| 1,3-Butadiene | 24 Hr. | Micrograms/cubic meter (25 C) | 0 | 0 | 0 | 0 |
| Formaldehyde | 24 Hr. | Micrograms/cubic meter (25 C) | 7.0049 | 2.507 | 0.73735 | 1.96627 |
| Acetaldehyde | 24 Hr. | Micrograms/cubic meter (25 C) | 4.4165 | 1.8587 | 0.2704 | 1.6224 |
| Lead (TSP) STP | 24 Hr. | Micrograms/cubic meter (25 C) | 0.0212 | 0.0104 | 0.0033 | 0.0099 |
| Nickel (TSP) STP | 24 Hr. | Micrograms/cubic meter (25 C) | 0.003 | 0.0012 | 0 | 0.001 |
| Manganese (TSP) STP | 24 Hr. | Micrograms/cubic meter (25 C) | 0.028 | 0.0079 | 0.002 | 0.006 |
| Beryllium (TSP) STP | 24 Hr. | Nanograms/cubic meter (25 C) | 0.008 | 0.0011 | 0 | 0 |
| Chromium (TSP) STP | 24 Hr. | Micrograms/cubic meter (25 C) | 0.003 | 0.0022 | 0.002 | 0.002 |
| Cadmium (TSP) STP | 24 Hr. | Micrograms/cubic meter (25 C) | 0.0003 | 9E-05 | 0 | 0.0001 |
| Arsenic (TSP) STP | 24 Hr. | Micrograms/cubic meter (25 C) | 0.001 | 0.0002 | 0 | 0 |
| Benzene | 24 Hr. | Micrograms/cubic meter (25 C) | 2.9834 | 0.5156 | 0.15982 | 0.4262 |
| Vinyl chloride | 24 Hr. | Micrograms/cubic meter (25 C) | 0.1279 | 0.0043 | 0 | 0 |

| | | | | | | |
|---|---|---|---|---|---|---|
| Ethylene dibromide | 24 Hr. | Micrograms/cubic meter (25 C) | 0 | 0 | 0 | 0 |
| cis-1,3-Dichloropropene | 24 Hr. | Micrograms/cubic meter (25 C) | 0 | 0 | 0 | 0 |
| trans-1,3-Dichloropropene | 24 Hr. | Micrograms/cubic meter (25 C) | 0 | 0 | 0 | 0 |
| 1,2-Dichloropropane | 24 Hr. | Micrograms/cubic meter (25 C) | 0 | 0 | 0 | 0 |
| Trichloroethylene | 24 Hr. | Micrograms/cubic meter (25 C) | 0 | 0 | 0 | 0 |
| 1,1,2,2-Tetrachloroethane | 24 Hr. | Micrograms/cubic meter (25 C) | 0 | 0 | 0 | 0 |
| Tetrachloroethylene | 24 Hr. | Micrograms/cubic meter (25 C) | 0.3393 | 0.023 | 0 | 0 |
| Ethylene dichloride | 24 Hr. | Micrograms/cubic meter (25 C) | 0.2025 | 0.0034 | 0 | 0 |
| Carbon tetrachloride | 24 Hr. | Micrograms/cubic meter (25 C) | 1.259 | 0.6615 | 0.62948 | 0.62948 |
| Chloroform | 24 Hr. | Micrograms/cubic meter (25 C) | 0.9771 | 0.1242 | 0 | 0 |
| Dichloromethane | 24 Hr. | Micrograms/cubic meter (25 C) | 1.3902 | 0.6657 | 0.34756 | 0.69512 |
| 1,3-Butadiene | 24 Hr. | Micrograms/cubic meter (25 C) | 0.7747 | 0.0478 | 0 | 0 |
| Acrylonitrile | 24 Hr. | Micrograms/cubic meter (25 C) | 1.4476 | 0.6625 | 0 | 0.57903 |
| Acetaldehyde | 24 Hr. | Micrograms/cubic meter (25 C) | 4.2363 | 2.2595 | 1.17173 | 2.07306 |
| Formaldehyde | 24 Hr. | Micrograms/cubic meter (25 C) | 6.1446 | 2.8433 | 1.4747 | 2.33495 |
| Lead (TSP) STP | 24 Hr. | Micrograms/cubic meter (25 C) | 0.0112 | 0.0037 | 0.0013 | 0.0033 |
| Nickel (TSP) STP | 24 Hr. | Micrograms/cubic meter (25 C) | 0.003 | 0.0017 | 0.001 | 0.002 |
| Manganese (TSP) STP | 24 Hr. | Micrograms/cubic meter (25 C) | 0.035 | 0.011 | 0.004 | 0.009 |
| Chromium (TSP) STP | 24 Hr. | Micrograms/cubic meter (25 C) | 0.005 | 0.0029 | 0.002 | 0.003 |
| Lead (TSP) STP | 24 Hr. | Micrograms/cubic meter (25 C) | 0.0142 | 0.0069 | 0.0033 | 0.0066 |
| Cadmium (TSP) STP | 24 Hr. | Micrograms/cubic meter (25 C) | 0.0004 | 9E-05 | 0 | 0.0001 |
| Beryllium (TSP) STP | 24 Hr. | Nanograms/cubic meter (25 C) | 0.1 | 0.0051 | 0 | 0 |
| Arsenic (TSP) STP | 24 Hr. | Micrograms/cubic meter (25 C) | 0.002 | 0.0003 | 0 | 0 |
| Acrylonitrile | 24 Hr. | Micrograms/cubic meter (25 C) | 2.3161 | 1.0648 | 0 | 1.01331 |
| cis-1,3-Dichloropropene | 24 Hr. | Micrograms/cubic meter (25 C) | 0 | 0 | 0 | 0 |
| Benzene | 24 Hr. | Micrograms/cubic meter (25 C) | 1.9499 | 0.4445 | 0 | 0.38358 |
| Benzene | 24 Hr. | Micrograms/cubic meter (25 C) | 2.3441 | 0.7332 | 0.26637 | 0.6393 |
| Benzene | 24 Hr. | Micrograms/cubic meter (25 C) | 1.6409 | 0.3644 | 0 | 0.35694 |
| Vinyl chloride | 24 Hr. | Micrograms/cubic meter (25 C) | 0 | 0 | 0 | 0 |
| Ethylene dibromide | 24 Hr. | Micrograms/cubic meter (25 C) | 0 | 0 | 0 | 0 |
| trans-1,3-Dichloropropene | 24 Hr. | Micrograms/cubic meter (25 C) | 0 | 0 | 0 | 0 |
| 1,2-Dichloropropane | 24 Hr. | Micrograms/cubic meter (25 C) | 0 | 0 | 0 | 0 |
| Trichloroethylene | 24 Hr. | Micrograms/cubic meter (25 C) | 0.2688 | 0.0046 | 0 | 0 |
| 1,1,2,2-Tetrachloroethane | 24 Hr. | Micrograms/cubic meter (25 C) | 0 | 0 | 0 | 0 |
| Tetrachloroethylene | 24 Hr. | Micrograms/cubic meter (25 C) | 2.3752 | 0.0978 | 0 | 0 |
| Ethylene dichloride | 24 Hr. | Micrograms/cubic meter (25 C) | 0.2025 | 0.0034 | 0 | 0 |
| Carbon tetrachloride | 24 Hr. | Micrograms/cubic meter (25 C) | 1.259 | 0.7575 | 0.62948 | 0.62948 |
| Chloroform | 24 Hr. | Micrograms/cubic meter (25 C) | 1.4656 | 0.3809 | 0 | 0.48854 |
| Dichloromethane | 24 Hr. | Micrograms/cubic meter (25 C) | 1.0427 | 0.7422 | 0.34756 | 0.69512 |
| Acetaldehyde | 24 Hr. | Micrograms/cubic meter (25 C) | 6.8501 | 2.7481 | 1.44213 | 2.25333 |
| Formaldehyde | 24 Hr. | Micrograms/cubic meter (25 C) | 11.183 | 3.7223 | 1.22892 | 2.94941 |
| 1,3-Butadiene | 24 Hr. | Micrograms/cubic meter (25 C) | 1.6048 | 0.1182 | 0 | 0 |
| Acetaldehyde | 3 Hr. | Micrograms/cubic meter (25 C) | 7.3008 | 3.2214 | 0.36053 | 3.06453 |
| Formaldehyde | 3 Hr. | Micrograms/cubic meter (25 C) | 13.641 | 5.9658 | 0.12289 | 6.02172 |
| Benzene | 3 Hr. | Micrograms/cubic meter (25 C) | 2.0511 | 0.1854 | 0 | 0 |
| Benzene | 3 Hr. | Micrograms/cubic meter (25 C) | 0.7512 | 0.2365 | 0 | 0 |

APPENDIX D-26

NON-NAAQS ACTUAL EMISSIONS REPORTED BY FACILITIES IN BUCKS COUNTY

**Facility Emissions Report**
**County:** **Bucks**
**Pollutant:** **Methanol**

**2015**

| Primary Facility ID | Primary Facility Name | Tons/Year | | |
|---|---|---|---|---|
| 3184 | CRC IND INC/WARMINSTER | 4.89 | | |
| 543437 | DRAPER DBS INC/PERKASIE | 0.19 | | |
| 637 | NEENAH NORTHEAST LLC/QUAKERTOWN | 0.0068 | Total Emissions for Selected Records: | 5.0932 |
| 516225 | KVK TECH/NEWTOWN | 0.0043 | Total Emissions for Selected Area: | 5.0932 |
| 2186 | CLEVELAND STEEL CONTAINER/QUAKERTOWN | 0.0021 | | |
| | | | | |

**2014**

| Primary Facility ID | Primary Facility Name | Tons/Year | | |
|---|---|---|---|---|
| 3184 | CRC IND INC/WARMINSTER | 6.698 | | |
| 543437 | DRAPER DBS INC/PERKASIE | 0.14 | | |
| 508 | GREIF PACKAGING LLC/WARMINSTER | 0.01 | Total Emissions for Selected Records: | 6.8661 |
| 637 | FIBERMARK NORTH AMERICA INC/QUAKERTOWN | 0.0079 | Total Emissions for Selected Area: | 6.8661 |
| 516225 | KVK TECH/NEWTOWN | 0.0062 | | |
| 2186 | CLEVELAND STEEL CONTAINER/QUAKERTOWN | 0.004 | | |

**Facility Emissions Report**
**County:** **Bucks**
**Pollutant:** **Benzene**

**2015**

| Primary Facility ID | Primary Facility Name | Tons/Year | | |
|---|---|---|---|---|
| 252449 | WASTE MGMT DSPL SVC /GROWS LDFL | 5.55 | | |
| 482698 | WASTE MGMT PA/TULLYTOWN RES REC FAC | 0.24 | | |
| 574352 | WALTER R EARLE ASPHALT PLT/MORRISVILLE | 0.0909 | | |
| 684022 | WASTE MGMT OF PA DOCK FACIL/MORRISVILLE | 0.09 | | |
| 240953 | EXELON GENERATION CO/CROYDON GEN STA | 0.0124 | Total Emissions for Selected Records: | 5.9932 |
| 566437 | FAIRLESS ENERGY LLC/FALLS TWP | 0.008 | Total Emissions for Selected Area: | 5.9932 |
| 276929 | US STEEL CORP/FAIRLESS HILLS | 0.0006 | | |
| 491700 | EXELON GENERATION CO/FALLS TWP PEAK PWR PLT | 0.0005 | | |
| 550729 | ORCHARD HILL MEM PARK/ABBEY GLEN | 0.0004 | | |
| 245649 | ROHM & HAAS CO/BRISTOL | 0.0002 | | |
| 516225 | KVK TECH/NEWTOWN | 0.0001 | | |
| 510902 | ST MARY MED CTR/LANGHORNE | 0.0001 | | |

**2014**

| Primary Facility ID | Primary Facility Name | Tons/Year | | |
|---|---|---|---|---|
| 252449 | WASTE MGMT DSPL SVC /GROWS LDFL | 2.09 | | |
| 482698 | WASTE MGMT PA/TULLYTOWN RES REC FAC | 0.38 | | |
| 684022 | WASTE MGMT OF PA DOCK FACIL/MORRISVILLE | 0.09 | | |
| 574352 | WALTER R EARLE ASPHALT PLT/MORRISVILLE | 0.0316 | | |
| 240953 | EXELON GENERATION CO/CROYDON GEN STA | 0.011 | Total Emissions for Selected Records: | 2.6154 |
| 566437 | FAIRLESS ENERGY LLC/FALLS TWP | 0.0105 | Total Emissions for Selected Area: | 2.6154 |
| 491700 | EXELON GENERATION CO/FALLS TWP PEAK PWR PLT | 0.001 | | |
| 276929 | US STEEL CORP/FAIRLESS HILLS | 0.0007 | | |
| 550729 | ORCHARD HILL MEM PARK/ABBEY GLEN | 0.0004 | | |
| 245649 | ROHM & HAAS CO/BRISTOL | 0.0002 | | |

**Facility Emissions Report**
**County: Bucks**
**Pollutant: Toluene**

**2015**

| Primary Facility ID | Primary Facility Name | Tons/Year |
|---|---|---|
| 566437 | FAIRLESS ENERGY LLC/FALLS TWP | 2.924 |
| 523906 | SUPERIOR WOODCRAFT/DOYLESTOWN PLT | 1.7 |
| 252449 | WASTE MGMT DSPL SVC /GROWS LDFL | 0.9 |
| 524625 | DUNMORE CORP/BRISTOL | 0.663 |
| 1170 | OLDCASTLE PRECAST INC/TELFORD | 0.5 |
| 3184 | CRC IND INC/WARMINSTER | 0.403 |
| 482698 | WASTE MGMT PA/TULLYTOWN RES REC FAC | 0.38 |
| 722 | RJM MFG INC/FAIRLESS HILLS | 0.37 |
| 2186 | CLEVELAND STEEL CONTAINER/QUAKERTOWN | 0.3058 |
| 238848 | QUAD GRAPHICS MARKETING LLC/CHALFONT | 0.25 |
| 647346 | LIBERTY COATING CO LLC/MORRISVILLE | 0.13 |
| 637 | NEENAH NORTHEAST LLC/QUAKERTOWN | 0.0978 |
| 559689 | MCADOO & ALLEN/QUAKER COLOR DIV | 0.07 |
| 276929 | US STEEL CORP/FAIRLESS HILLS | 0.0584 |
| 516225 | KVK TECH/NEWTOWN | 0.03 |
| 574352 | WALTER R EARLE ASPHALT PLT/MORRISVILLE | 0.0152 |
| 281480 | HANSON AGGREGATES/PENNS PARK PLT | 0.009 |
| 261989 | EUREKA STONE QUARRY/RUSH VALLEY 1 | 0.0074 |
| 550729 | ORCHARD HILL MEM PARK/ABBEY GLEN | 0.0004 |
| 245649 | ROHM & HAAS CO/BRISTOL | 0.0003 |
| 510902 | ST MARY MED CTR/LANGHORNE | 0.0002 |
| | | |

Total Emissions for Selected Records: 8.8145
Total Emissions for Selected Area: 8.8145

**2014**

| Primary Facility ID | Primary Facility Name | Tons/Year |
|---|---|---|
| 566437 | FAIRLESS ENERGY LLC/FALLS TWP | 1.77 |
| 647346 | LIBERTY COATING CO LLC/MORRISVILLE | 1.63 |
| 523906 | SUPERIOR WOODCRAFT/DOYLESTOWN PLT | 1.6 |
| 524625 | DUNMORE CORP/BRISTOL | 0.92 |
| 252449 | WASTE MGMT DSPL SVC /GROWS LDFL | 0.76 |
| 482698 | WASTE MGMT PA/TULLYTOWN RES REC FAC | 0.65 |
| 3184 | CRC IND INC/WARMINSTER | 0.6 |
| 1170 | OLDCASTLE PRECAST INC/TELFORD | 0.5 |
| 722 | RJM MFG INC/FAIRLESS HILLS | 0.41 |
| 241863 | FRES CO SYS USA INC/TELFORD PLT | 0.4 |
| 238848 | QUAD GRAPHICS MARKETING LLC/CHALFONT | 0.29 |
| 508 | GREIF PACKAGING LLC/WARMINSTER | 0.12 |
| 637 | FIBERMARK NORTH AMERICA INC/QUAKERTOWN | 0.1073 |
| 276929 | US STEEL CORP/FAIRLESS HILLS | 0.0759 |
| 2186 | CLEVELAND STEEL CONTAINER/QUAKERTOWN | 0.073 |
| 516225 | KVK TECH/NEWTOWN | 0.0435 |
| 281480 | HANSON AGGREGATES/PENNS PARK PLT | 0.0109 |
| 574352 | WALTER R EARLE ASPHALT PLT/MORRISVILLE | 0.0053 |
| 261989 | EUREKA STONE QUARRY/RUSH VALLEY 1 | 0.0031 |
| 550729 | ORCHARD HILL MEM PARK/ABBEY GLEN | 0.0003 |
| 245649 | ROHM & HAAS CO/BRISTOL | 0.0003 |
| 510902 | ST MARY MED CTR/LANGHORNE | 0.0002 |

Total Emissions for Selected Records: 9.9698
Total Emissions for Selected Area: 9.9698

**Facility Emissions Report**
**County:** **Bucks**
**Pollutant:** **Triethylamine**

**2015**

| Primary Facility ID | Primary Facility Name | Tons/Year |
|---|---|---|
| 519 | SUPERPAC INC/SOUTHAMPTON | 0.0015 |

**2014**

| Primary Facility ID | Primary Facility Name | Tons/Year |
|---|---|---|
| 519 | SUPERPAC INC/SOUTHAMPTON | 0.0022 |

**Facility Emissions Report**
**County: Bucks**
**Pollutant: Glycol Ethers**

**2015**

| Primary Facility ID | Primary Facility Name | Tons/Year |
|---|---|---|
| 519 | SUPERPAC INC/SOUTHAMPTON | 0.6813 |
| 238848 | QUAD GRAPHICS MARKETING LLC/CHALFONT | 0.63 |
| 1170 | OLDCASTLE PRECAST INC/TELFORD | 0.2 |
| 637 | NEENAH NORTHEAST LLC/QUAKERTOWN | 0.109 |
| 276929 | US STEEL CORP/FAIRLESS HILLS | 0.0072 |
| 516225 | KVK TECH/NEWTOWN | 0.0015 |
| | | |

Total Emissions for Selected Records: 1.6290
Total Emissions for Selected Area: 1.6290

**2014**

| Primary Facility ID | Primary Facility Name | Tons/Year |
|---|---|---|
| 238848 | QUAD GRAPHICS MARKETING LLC/CHALFONT | 2.17 |
| 519 | SUPERPAC INC/SOUTHAMPTON | 0.8317 |
| 637 | FIBERMARK NORTH AMERICA INC/QUAKERTOWN | 0.1527 |
| 1170 | OLDCASTLE PRECAST INC/TELFORD | 0.1 |
| 2186 | CLEVELAND STEEL CONTAINER/QUAKERTOWN | 0.026 |
| 516225 | KVK TECH/NEWTOWN | 0.0097 |
| 276929 | US STEEL CORP/FAIRLESS HILLS | 0.0094 |

Total Emissions for Selected Records: 3.2995
Total Emissions for Selected Area: 3.2995

**Facility Emissions Report**
**County: Bucks**
**Pollutant: Trichloroethylene**

**2015**

| Primary Facility ID | Primary Facility Name | Tons/Year | | |
|---|---|---|---|---|
| 510078 | BOEKEL IND INC/FEASTERVILLE | 0.6175 | Total Emissions for Selected Records: | 0.6175 |
| | | | Total Emissions for Selected Area: | 0.6175 |

**2014**

| Primary Facility ID | Primary Facility Name | Tons/Year | | |
|---|---|---|---|---|
| 510078 | BOEKEL IND INC/FEASTERVILLE | 0.5955 | Total Emissions for Selected Records: | 1.0945 |
| 3184 | CRC IND INC/WARMINSTER | 0.499 | Total Emissions for Selected Area: | 1.0945 |

**Facility Emissions Report**
**County: Bucks**
**Pollutant: Methyl Isobutyl Ketone (4-Methyl-2-Pentanone)**

**2015**

| Primary Facility ID | Primary Facility Name | Tons/Year |
|---|---|---|
| 524625 | DUNMORE CORP/BRISTOL | 0.68 |
| 647346 | LIBERTY COATING CO LLC/MORRISVILLE | 0.62 |
| 559689 | MCADOO & ALLEN/QUAKER COLOR DIV | 0.04 |
| 2186 | CLEVELAND STEEL CONTAINER/QUAKERTOWN | 0.0025 |
| 516225 | KVK TECH/NEWTOWN | 0.002 |

Total Emissions for Selected Records: 1.3445
Total Emissions for Selected Area: 1.3445

**2014**

| Primary Facility ID | Primary Facility Name | Tons/Year |
|---|---|---|
| 647346 | LIBERTY COATING CO LLC/MORRISVILLE | 0.92 |
| 524625 | DUNMORE CORP/BRISTOL | 0.82 |
| 2186 | CLEVELAND STEEL CONTAINER/QUAKERTOWN | 0.004 |
| 516225 | KVK TECH/NEWTOWN | 0.0023 |

Total Emissions for Selected Records: 1.7463
Total Emissions for Selected Area: 1.7463

**Facility Emissions Report**
**County: Bucks**
**Pollutant: Chloroform**

**2015- No Data**

**2014- No Data**

**Facility Emissions Report**
**County: Bucks**
**Pollutant: Hydrochloric Acid**

**2015**

| Primary Facility ID | Primary Facility Name | Tons/Year | | |
|---|---|---|---|---|
| 479819 | WHEELABRATOR FALLS INC/FALLS TWP | 43.81 | Total Emissions for Selected Records: | 46.17 |
| 510887 | CLEAN EARTH OF SOUTHEAST PA/MORRISVILLE | 2.362 | Total Emissions for Selected Area: | 46.17 |

**2014**

| Primary Facility ID | Primary Facility Name | Tons/Year | | |
|---|---|---|---|---|
| 479819 | WHEELABRATOR FALLS INC/FALLS TWP | 35.1 | Total Emissions for Selected Records: | 36.9 |
| 510887 | CLEAN EARTH OF SOUTHEAST PA/MORRISVILLE | 1.8 | Total Emissions for Selected Area: | 36.9 |

**Facility Emissions Report**
**County: Bucks**
**Pollutant: Arsenic**

**2015- No Data**

**2014**

| Primary Facility ID | Primary Facility Name | Tons/Year |
|---|---|---|
| 276929 | US STEEL CORP/FAIRLESS HILLS | 0.0001 |

**Facility Emissions Report**
**County: Bucks**
**Pollutant: Cadmium**

**2015**

| Primary Facility ID | Primary Facility Name | Tons/Year |
|---|---|---|
| 276929 | US STEEL CORP/FAIRLESS HILLS | 0.0003 |
| 245649 | ROHM & HAAS CO/BRISTOL | 0.0001 |

Total Emissions for Selected Records: 0.0004
Total Emissions for Selected Area: 0.0004

**2014**

| Primary Facility ID | Primary Facility Name | Tons/Year |
|---|---|---|
| 276929 | US STEEL CORP/FAIRLESS HILLS | 0.0003 |
| 566437 | FAIRLESS ENERGY LLC/FALLS TWP | 0.0001 |
| 245649 | ROHM & HAAS CO/BRISTOL | 0.0001 |

Total Emissions for Selected Records: 0.0005
Total Emissions for Selected Area: 0.0005

**Facility Emissions Report**
**County: Bucks**
**Pollutant: Chromium**

**2015**

| Primary Facility ID | Primary Facility Name | Tons/Year |
|---|---|---|
| 276929 | US STEEL CORP/FAIRLESS HILLS | 0.0004 |
| 241863 | FRES CO SYS USA INC/TELFORD PLT | 0.0001 |
| 245649 | ROHM & HAAS CO/BRISTOL | 0.0001 |

Total Emissions for Selected Records: 0.0006
Total Emissions for Selected Area: 0.0006

**2014**

| Primary Facility ID | Primary Facility Name | Tons/Year |
|---|---|---|
| 276929 | US STEEL CORP/FAIRLESS HILLS | 0.0004 |
| 245649 | ROHM & HAAS CO/BRISTOL | 0.0001 |
| 566437 | FAIRLESS ENERGY LLC/FALLS TWP | 0.0001 |

Total Emissions for Selected Records: 0.0006
Total Emissions for Selected Area: 0.0006

**Facility Emissions Report**
**County: Bucks**
**Pollutant: Manganese**

**2015**

| Primary Facility ID | Primary Facility Name | Tons/Year |
|---|---|---|
| 240953 | EXELON GENERATION CO/CROYDON GEN STA | 0.1441 |
| 281480 | HANSON AGGREGATES/PENNS PARK PLT | 0.0005 |
| 276929 | US STEEL CORP/FAIRLESS HILLS | 0.0001 |

Total Emissions for Selected Records: 0.1447
Total Emissions for Selected Area: 0.1447

**2014**

| Primary Facility ID | Primary Facility Name | Tons/Year |
|---|---|---|
| 240953 | EXELON GENERATION CO/CROYDON GEN STA | 0.1162 |
| 281480 | HANSON AGGREGATES/PENNS PARK PLT | 0.0006 |
| 276929 | US STEEL CORP/FAIRLESS HILLS | 0.0001 |

Total Emissions for Selected Records: 0.1169
Total Emissions for Selected Area: 0.1169

**Facility Emissions Report**
**County: Bucks**
**Pollutant: Nickel**

**2015**

| Primary Facility ID | Primary Facility Name | Tons/Year |
|---|---|---|
| 240953 | EXELON GENERATION CO/CROYDON GEN STA | 0.001 |
| 276929 | US STEEL CORP/FAIRLESS HILLS | 0.0006 |
| 245649 | ROHM & HAAS CO/BRISTOL | 0.0002 |
| 566437 | FAIRLESS ENERGY LLC/FALLS TWP | 0.0001 |
| 241863 | FRES CO SYS USA INC/TELFORD PLT | 0.0001 |

Total Emissions for Selected Records: 0.002
Total Emissions for Selected Area: 0.002

**2014**

| Primary Facility ID | Primary Facility Name | Tons/Year |
|---|---|---|
| 240953 | EXELON GENERATION CO/CROYDON GEN STA | 0.0007 |
| 276929 | US STEEL CORP/FAIRLESS HILLS | 0.0007 |
| 245649 | ROHM & HAAS CO/BRISTOL | 0.0002 |
| 566437 | FAIRLESS ENERGY LLC/FALLS TWP | 0.0001 |

Total Emissions for Selected Records: 0.0017
Total Emissions for Selected Area: 0.0017

**Facility Emissions Report**
**County: Bucks**
**Pollutant: Lead**

**2015**

| Primary Facility ID | Primary Facility Name | Tons/Year |
|---|---|---|
| 479819 | WHEELABRATOR FALLS INC/FALLS TWP | 0.26 |
| 281480 | HANSON AGGREGATES/PENNS PARK PLT | 0.033 |
| 240953 | EXELON GENERATION CO/CROYDON GEN STA | 0.0032 |
| 281862 | MILLER MATERIALS/RUSHLAND QUARRY | 0.002 |
| 519 | SUPERPAC INC/SOUTHAMPTON | 0.0001 |
| 276929 | US STEEL CORP/FAIRLESS HILLS | 0.0001 |
| | | |

Total Emissions for Selected Records: 0.2984
Total Emissions for Selected Area: 0.2984

**2014**

| Primary Facility ID | Primary Facility Name | Tons/Year |
|---|---|---|
| 281480 | HANSON AGGREGATES/PENNS PARK PLT | 0.0392 |
| 479819 | WHEELABRATOR FALLS INC/FALLS TWP | 0.0189 |
| 240953 | EXELON GENERATION CO/CROYDON GEN STA | 0.0028 |
| 281862 | MILLER MATERIALS/RUSHLAND QUARRY | 0.001 |
| 257284 | NACEVILLE MATERIALS / CHALFONT | 0.001 |
| 491700 | EXELON GENERATION CO/FALLS TWP PEAK PWR PLT | 0.0003 |
| 276929 | US STEEL CORP/FAIRLESS HILLS | 0.0002 |

Total Emissions for Selected Records: 0.0634
Total Emissions for Selected Area: 0.0634