WESTMORELAND SANITARY LANDFILL

111 Conner Lane
Belle Vernon, PA 15012

PERMIT NUMBER 100277
ROSTRAVER TOWNSHIP
WESTMORELAND COUNTY, PENNSYLVANIA

MINOR PERMIT MODIFICATION
(Leachate Management System)

ORIGINAL

PREPARED BY

Civil Design Solutions, Inc.
1331 State Avenue • Coraopolis, Pennsylvania 15108
Phone (412) 299-2700 • Fax (412) 299-2922
Project Number 2019-108

Submitted February 19, 2020
Revised June 10, 2020 and
Revised August 16, 2020

VOLUME 1 OF 1

August 16, 2020

Mr. Gregory W. Holesh, P.E.
Pennsylvania Department of Environmental Protection
Southwest Regional Office
Waste Management Program
400 Waterfront Drive
Pittsburgh, PA 15222-4745

Subject: Sanitary Landfill – Minor Permit Modification Application
Leachate Management System
Rostraver Township, Westmoreland County, Pennsylvania
PADEP Permit No. 100277
Civil Design Solutions Project 2019-108

Civil Design Solutions, Inc. (Design Solutions) is pleased to present one original and three copies of this response to the PADEP July 17, 2020 Technical Review Comment Letter regarding the Minor Permit Modification Application for the Westmoreland Sanitary Landfill, LLC. – Sanitary Landfill facility located in Rostraver Township, Westmoreland County, Pennsylvania. This Minor Permit Modification was originally submitted February 19, 2020 with a subsequent response to PADEP comments submitted June 10, 2020.

This letter has been prepared in a comment-response format where each PADEP comment is presented and a written response is provided. Revised pages presented with this response to comments are provided on ivory-colored paper and have been identified with a revision date on the page and a revision line is shown in the margin of those portions of the text that have been revised as part of this response to comments.

1. Attachment 25-5:

a. The minor losses calculation for the Leachate Evaporator Pump Station contained in Attachment 25-5.3 assumes that the K-factors are equal to 2 for each component of the HRT system. Please explain how those values were determined based on manufacturer operational data.

Response: Pentair (the manufacturer) was contacted to obtain more detailed information regarding the anticipated total dynamic head (TDH) corresponding to the HRT system to be installed at WSL. The HRT system includes four main equipment components and each component includes a gauge that presents the real-time pressure of each vessel. Each vessel includes a maximum recommended pressure for which element changeout should occur and an estimated minimum pressure representing the system with newly installed filters. As provided by Pentair, the minimum pressure of the HRT system representing newly installed filters is 1-psi and the maximum pressure prior to filter changeout of the HRT system is 70-psi which corresponds to 2.31-ft and 161.7-ft of TDH, respectively.

Revised pump calculations have been prepared to represent the maximum anticipated HRT pressure and the minimum HRT pressure to estimate the anticipated range of pumping rates of the system. The revised pump calculations as well as the information obtained from Pentair regarding the TDH of the system replace the previously prepared calculations presented in Attachment 25-5, Exhibit 25-5.3.

b. The minor losses listed in the TDH Calculations Table in Attachment 25-5.3 for the Leachate Evaporator Pump Station and Attachment 25-5.4 for the Storage Tank Inline Booster Pump appear to be overstated based on the formula represented in the attachments. Please revisit the calculation to ensure that the calculated minor losses correspond to the formula: Hm = 16Q2 / (2g*(448.3*pi)^2*D^4) * K.

Response: The pump calculations for the Leachate Evaporator Pump Station and the Storage Tank Inline Booster Pump have been revised to utilize the correct formula to calculate minor losses. The revised calculations are presented with this response to replace the previous calculations in Attachment 25-5, Exhibit 25-5.3 and Exhibit 25-5.4.

c. The information provided with respect to the Storage Tank Inline Booster Pump does not include a description of the mechanism that will be employed to control its operation. Please clarify if the pump's operation will activate automatically or manually and the measures by which operation will terminate in the event of overflows from Leachate Evaporator Pump Station or bypass from the leachate management area.

Response: The Storage Tank Inline Booster Pump will include an upstream electronic control valve to be positioned within the Leachate Storage Tank Inline Pump Manhole as identified in Detail C on revised Drawing Sheet No. (2019-108)-45B. In order to initiate operation of the inline pump, a valve is opened up within the leachate storage tank manhole (MH-6) to leachate within the onsite storage tanks to drain through the manhole to the inline pump. The electronic control valve will be configured with the leachate evaporator pump station and the evaporator process tank and will remain in the open position under normal operating conditions when the process tank is not at capacity. A pressure transducer equipped with the inline pump senses a leachate head from the storage tanks which turns the pump on. The pump will continue to operate until the storage tank manhole is manually closed, the process tanks reach capacity and the electronic control valve is closed or the tanks are empty and the pressure transducer does not sense a liquid head.

2. Attachment 25-8:

a. 25 Pa. Code Section 299.122(b)(16) requires that aboveground storage tanks

employ a method of leak detection capable of detecting a release. With respect this requirement, the foundation detail presented in Attachment 25-8 for the proposed Process Tank depicts that the top of the foundation will be separated from the steel tank floor by a ½-inch thick cane fiber material from which the perimeter weep tubes will extend to conduct leakage to the tank perimeter for observation within the secondary containment. The Department questions the capability of the cane fiber material's to effectively transmit leakage from the tank bottom to the perimeter of the foundation for observation. Please provide the results of laboratory testing of the in-plane hydraulic properties of the proposed cane fiber material conducted under loading conditions greater than or equal to that of the filled tank. The Department further questions whether the cane fiber material would tend to absorb leakage and potentially cause corrosion cells underneath the tank bottom contrary to 25 Pa. Code Section 299.122(b)(2). Please provide documentation to confirm that cane fiber joint filler panels placed in contact with tank bottoms will ensure that corrosion is minimized.

Response: The proposed process tank will include an inner steel tank with a glass fused to steel coating and an outer powder coated epoxy secondary containment tank. A glass coating will also be applied to the bottom panels which rest on a one-half inch thick cane fiber mat between the tank bottom and the concrete foundation. The glass coating will protect the tank bottom from corrosion potential in the event any liquids or moisture would be present beneath the tank bottom. Any potential leak that could emerge from the sides of the inner tank would fill the annular space between the two tanks and could be visual observed in the space between the tanks.

The proposed cane fiber mats have been used by Mid-Atlantic Storage Systems, Inc. tanks throughout all of Pennsylvania for many years, including at WSL. The existing onsite leachate storage tanks were supplied by Mid-Atlantic and include the same one-half inch thick cane fiber matting as being proposed here. More commonly used glass fused to steel tank applications include a single glass fused to steel tank (similar to the inner tank proposed here) that rests on a cane fiber mat within a concrete secondary containment area similar to what is currently being used at WSL for onsite leachate storage. The only difference between those other applications and that proposed here is the secondary containment being a secondary tank instead of a concrete structure. Any potential leak from the tank bottom would transmit through the cane fiber mat, between the cane fiber mat and the tank bottom or between the cane fiber mat and the concrete foundation. The proposed perimeter weep tubes were added for an additional level of conservancy but were not anticipated to be the primary method of transmitting potential leaks to the annular space for detection.

b. The June 10, 2020 technical review letter response does not include the

requested revision of Attachment 25-8 for a contingency plan for alternative disposal should the facility be unable to dispose on-site due to exceedance of the monthly source term allocation. The response asserts that the monthly source term allocation does not apply to residuals generated by the leachate evaporation system on the basis that those residuals result from liquids released from waste materials previously approved and accepted for disposal at site and that tracking of the residuals towards the monthly source term allocation would be "double-counting" against the allowable limits. The Department disagrees with that assertion.

The Department's TENORM disposal protocol was developed to limit potential exposure to radiation deposited in the disposal areas based on the concentration of radioactive material in the waste. The disposal protocol requires that TENORM waste disposed in a landfill be mixed with cold waste at a 50:1 ratio and to prevent hot spots. The allocation takes into account the amount of cold waste that is received by a landfill for three prior calendar years and determines the amount of TENORM waste that can be accepted by the landfill to ensure that there is enough cold waste to mix with the TENORM waste. Allowing the concentrated leachate evaporator residue to be disposed in the landfill without accounting for its TENORM levels could create a potential for the landfill exceed the 50:1 mixing ratio in accordance with the protocol. As such, evaporator system residues are required to be managed in accordance with the TENORM disposal protocol and subject to the monthly allocation. Please provide the previously requested contingency plan for alternative disposal should the facility be unable to dispose on-site due to exceedance of the monthly source term allocation.

Response: An Evaporator Residuals Contingency Plan (Contingency Plan) has been prepared and is included as Exhibit 28-8.1 to set forth procedures for managing the disposal of residual wastes generated during the leachate evaporation process. Additionally, the Contingency Plan provides alternative disposal methods in the event the Monthly Source Term Allocation (MSTA) would be reached.

3. **Attachment 25-9: With respect to the concern expressed in the Department's April 14, 2020 technical review letter regarding pumping rates from the Leachate Evaporator Pump Station in excess of the 70 gpm design feed rate specified on the manufacturer's Data Sheets appended to Attachment 25-9, the response provided refers to discussions with the system's manufacturer claiming that the proposed equipment may operate successfully at flow rates as high as 100 gpm. Please provide a written warranty from Pentair Filtration Solutions, LLC to confirm the performance capability of the proposed HRT system at the specified pumping rates.**

Response: Pentair (the manufacturer) was contacted to obtain more detailed information

regarding the flow capacity of the HRT system. The HRT system includes four main equipment components with the HRT skid being the last component in the system. As demonstrated by the Email documentation presented here for inclusion into Attachment 25-9, the process which limits flow in the entire system is the HRT skid which has a maximum suggested flowrate of 200-gpm. The pump calculations included in Attachment 25-5, Exhibit 25-5.3 estimate an operating flow rate between 56-gpm and 100-gpm for one pump and 88-gpm and 110-gpm for two pumps operating simultaneously. Therefore, the HRT can adequately handle the anticipated operating flow of the proposed system.

4. **Attachment 25-10: A measure described in Attachment 25-10 to reduce leachate generation rates involves sealing of exposed protective cover at the perimeter of the disposal area with a soil wedge to allow for diversion of run-off. The Department observes that implementation of that measure would create circumstances whereby upslope leachate seeps may be conducted beyond the lined disposal area. Please describe how such circumstance will be prevented. In addition, the Department requests that the evaluation of leachate generation reduction measures be expanded to consider deployment of geomembrane covers on portions of the disposal area with intermediate soil cover.**

   Response: Form 25, Attachment 25-10 has been revised to include additional information on the proposed soil wedge to promote stormwater runoff and to propose measures to address potential upslope leachate sleeps. Additionally, a discussion on utilizing temporary geomembrane tarps to promote stormwater runoff which would result in the potential to reduce leachate generation has been provided. Further evaluations of geomembrane tarps will be completed in the future to consider the configuration of the landfill following completion of Cell S6(A) currently under construction and future development. Following future evaluations, a request will be submitted to the PADEP in the form of a cover letter, calculations and drawings for the sitewide use of temporary tarps.

5. **A Drawing No. (2019-108)-45B: The configuration of the Leachate Management Pump Station shown in Detail A on application Drawing No. (2019-108)-45B positions the pump-on float elevation for the second pump above the overflow pipe. The Department believes that the design should minimize bypassing events by initiating operation of the second pump before the level of leachate in the manhole reaches the overflow pipe. Please revise Detail A to either raise the elevation of the overflow pipe or lower the elevation of the pump-on float.**

   Response: Detail A on Drawing Sheet No. (2019-108)-45B was revised to change the pump-on elevation for the second pump to be just below the overflow pipe. The Title / Cover Sheet was also revised to present an updated summary of the permit drawings.

If you have any additional questions concerning this Minor Permit Modification, please do not hesitate to contact Mr. Rich Walton of Sanitary Landfill, at (610) 698-9291 or our office at (412) 299-2700.

Sincerely,
Civil Design Solutions, Inc.

Michael E. Zucatti, P.E.
Assistant Project Manager, Ext. 157

David W. Murray, P.E.
Principal Engineer, Ext. 151

cc: Mr. Rich Walton, Sanitary Landfill – 1 Copy

THE FOLLOWING CHANGES ARE PRESENTED HERE FOR APPLICATION

1. Replace the Binder Cover and Spine with those included here.
2. Insert the Cover Letter at the front of the Application.

THE FOLLOWING CHANGES ARE PRESENTED HERE FOR FORM A
1. Replace the Form A Table of Contents with that included here. 2. Replace Form A pages 1 and 2 with those included here.

FORM A
APPLICATION FOR MUNICIPAL WASTE PERMIT

Prepared 02/2020, Revised 06/2020, **08/2020**

This Form A accompanies this application to identify it as a Minor Permit Modification Application, which presents no increase to the property area, facility area or disposal areas.

Form A - Table of Contents

FORM A (Rev 08/2020) ..... This Minor Permit Modification

2540-PM-BWM0357 6/2005

COMMONWEALTH OF PENNSYLVANIA
DEPARTMENT OF ENVIRONMENTAL PROTECTION
BUREAU OF WASTE MANAGEMENT

Coordination #

FORM A
APPLICATION FOR MUNICIPAL OR RESIDUAL WASTE PERMIT

Prepared 02/2020, Revised 06/2020, 08/2020

This form must be fully and accurately completed. All required information must be typed or legibly printed in the spaces provided herein. Replacement/substitution of or attachment to this form is prohibited. Improperly completed forms may be rejected by the Department, may be considered to be violations of the Department's Rules and Regulations, and may result in assessment of fines and penalties.

SECTION A. APPLICANT IDENTIFIER (Check one of the boxes and identify both)

☒ Owner
Name: *Westmoreland Sanitary Landfill, LLC* Phone #: *(412) 426-5432*
Address: *111 Conner Lane, Belle Vernon, PA 15012-4519* Email:

☐ Operator
Name: *Westmoreland Sanitary Landfill, LLC* Phone #: *(412) 426-5432*
Address: *111 Conner Lane, Belle Vernon, PA 15012-4519* Email: *nstork@nobleenviro.com*

SECTION B. TYPE OF FACILITY

- Municipal Waste Landfill ☒
- Construction/Demolition Waste Landfill ☐
- Municipal Waste Composting Facility ☐
- Municipal Waste Incinerator or Resource Recovery Facility ☐
- Municipal Waste Demonstration Facility ☐
- Municipal Waste Transfer Facility ☐
- Municipal Waste Processing Facility ☐
- Other, Specify ☐

- Residual Waste Landfill ☐
  - Class I ☐
  - Class II ☐
  - Class III ☐
- Residual Waste Disposal Impoundment
  - Class I ☐
  - Class II ☐
- Residual Waste Composting Facility ☐
- Residual Waste Demonstration Facility ☐
- Residual Waste Transfer Facility ☐
- Residual Waste Incinerator or Other Processing Facility ☐
- Residual Waste Agricultural Utilization ☐
- Residual Waste Land Reclamation ☐
- Other, Specify ☐

SECTION C. MAP LOCATION

U.S.G.S. Map Location of Facility (attach the map and identify location on the USGS map)

7.5" Map Name *Donora, Pennsylvania Quadrangle*

Center of Facility:

Latitude *N 40* ° *09* ' *01* " Longitude *W 79* ° *51* ' *15* "

SECTION D. GENERAL INFORMATION

Number of New Acres Proposed for Permit (Issued)
0 • 0

Number of Acres Proposed for Permit (New)
0 • 0

Total Acres of the Property
292 • 5

Number of Previously Permitted Acres
270 • 0

Current Permit ID Number(s) *100277*

SECTION E. AFFIDAVIT

COMMONWEALTH/STATE OF Pennsylvania
ss:
COUNTY OF Washington

Sworn and subscribed to before me this 31st day
of July 20 20

Commonwealth of Pennsylvania - Notary Seal
Deborah M. Sas, Notary Public
Washington County
My commission expires August 27, 2022
Commission number 1191248

NOTARY PUBLIC

My Commission Expires August 27, 2022

Print or type name to be Signed: Richard Walton Date 7/31/2020

Date: 7/31/2020

I, _____ do hereby certify pursuant to the penalties of 18 Pa. C.S.A.
(Signature of Applicant)

Section 4904 to the best of my knowledge, information, and belief that the information contained in this application is true and correct and is in conformance with 25 PA. Code Chapters 271 or 287, whichever is applicable, of the rules and regulations of the Department of Environmental Protection.

SECTION F. APPLICATION FEE

A. Municipal Facilities

i. Application for new permit, or repermitting. (ref. 271.128)

- ☐ $18,500 – Municipal Waste Landfill
- ☐ $19,250 – Construction/Demolition Waste Landfill
- ☐ $4,400 – Transfer Facility
- ☐ $1,900 – Incinerator or Resource Recovery Facility
- ☐ $4,000 – Other Municipal Waste Processing Facility, including Composting Facility
- ☐ $17,300 – Demonstration Facility

ii. Application for a major permit modification.

- ☐ $300 – Addition of types of waste not approved in the permit
- ☐ $7,800 – Municipal Waste Landfill and Construction/Demolition Waste Landfill
- ☐ $700 – Transfer Facility
- ☐ $1,500 – Incinerator or Resource Recovery Facility
- ☐ $700 – Other Municipal Waste Processing Facility, including Composting Facility
- ☐ $6,700 – Demonstration Facility

iii. ☐ $300 – Permit Reissuance

iv. ☐ $300 – Permit Renewal

v. ☒ $300 – Minor Permit Modification

THE FOLLOWING CHANGES ARE PRESENTED HERE FOR FORM 25

1. Replace the Form 25 Table of Contents with that included here.
2. Replace page 1 of Form 25 with that included here.
3. Replace Attachment 25-5, Exhibit 25-5.3 with that included here.
4. Replace Attachment 25-5, Exhibit 25-5.4 with that included here.
5. Replace the Attachment 25-8 Narrative with that included here.
6. Insert the Attachment 25-8, Exhibit 25-8.1 Evaporator Residuals Contingency Plan immediately after Attachment 25-8.
7. Replace the Attachment 25-10 narrative with that included here.

FORM 25
LEACHATE MANAGEMENT – PHASE II

Prepared 06/03; Rev 09/05, Rev 03/12, Rev 10/12, Rev 11/12, Rev 02/15, Rev 02/20, Rev 06/20, **Rev 08/20**

Form 25 - Table of Contents

FORM (Rev 08/2020) ..... This Minor Permit Modification

Attachment 25-1 ..... Leachate Quantity Estimate
Attachment 25-1, Exhibit 25-1.1 — Leachate Generation Records
Attachment 25-1, Exhibit 25-1.2 — Analysis of Historical Leachate Flows

Attachment 25-2 (Rev 02/2020) ..... Leachate Quality Information

Attachment 25-3 (Rev 06/2020) .. Current and Proposed Leachate Collection and Handling Systems
Attachment 25-3, Exhibit 25-3.1 (Rev 06/2020) — Leachate Management Plan

Attachment 25-4 (Rev 06/2020) ..... Narrative Responses
Attachment 25-4, Exhibit 25-4.1 — Letters of Intent from POTW facilities

Attachment 25-5 ..... Leachate Pump and Piping System Calculations
Attachment 25-5, Exhibit 25-5.1 — Additional Analysis for Hydraulic Grade Line (HGL) & Evaluation of Existing Gravity Line
Attachment 25-5, Exhibit 25-5.2 — Proposed Leachate Conveyance Piping
Attachment 25-5, Exhibit 25-5.3 (Rev 08/2020) — Leachate Management Pump Station
Attachment 25-5, Exhibit 25-5.4 **(Rev 08/2020)** — Storage Tank Inline Booster Pump

Attachment 25-6 (Rev 03/2012) ..... Leachate Generation with Co-Disposal of Shale Drilling Wastes

Attachment 25-7 (Rev 10/2012) ..... Additional Pump Calculations with Co-Disposal of Shale Drilling Wastes
Attachment 25-7, Exhibit 25-7.1 — Additional Leachate Collection Zone Pump Calculations
Attachment 25-7, Exhibit 25-7.2 — Additional Leachate Detection Zone Pump Calculations

Attachment 25-8 (Rev 08/2020)..... Leachate Evaporator
Attachment 25-8, Exhibit 25-8.1 ..... Evaporator Residuals Contingency Plan

Attachment 25-9 (Rev 06/2020)..... Hydrocarbon Recovery Technology (HRT)

Attachment 25-10 (Rev 08/2020)..... Leachate Trucking

2540-PM-BWM0152 6/2005

COMMONWEALTH OF PENNSYLVANIA
DEPARTMENT OF ENVIRONMENTAL PROTECTION
BUREAU OF WASTE MANAGEMENT

Date Prepared/Revised
06/03, Rev 09/05, 03/12, 10/12, 11/12, 02/15, 02/20, 06/20, 08/20
DEP USE ONLY
Date Received

FORM 25
LEACHATE MANAGEMENT - PHASE II

This form must be fully and accurately completed. All required information must be typed or legibly printed in the spaces provided. If additional space is necessary, identify each attached sheet as Form 25, reference the item number and identify the date prepared. The "date prepared/revised" on any attached sheets should match the "date prepared/revised" on this page.

General References: 273.162, 273.163, 273.271 to 273.275/277.162, 277.163, 277.271 to 277.275, 285.122, 285.123

SECTION A. SITE IDENTIFIER

Applicant/permittee: *Westmoreland Sanitary Landfill, LLC*

Site Name: *Sanitary Landfill*

Facility ID (as issued by DEP): *100277*

SECTION B. BASIC TREATMENT METHODS

☐ 1. Discharge to permitted POTW, following pretreatment, if required, by federal, state or local law or by discharge into another permitted treatment facility.

☐ 2. On-site treatment and discharge to stream.

☐ 3. Spray irrigation following treatment.

☒ 4. Other: *An onsite Evaporator will be utilized as the primary disposal method with offsite leachate hauling as interim and emergency backup. Two existing POTW connections may be reactivated in the future.*

For Proposed Site: Will permanent leachate pre-treatment method be in-place before placement of waste? *N/A*

SECTION C. COMPONENTS OF LEACHATE TREATMENT PLAN

Check and/or Describe

1.	Estimate of annual leachate quantity and quality and supporting calculations.	*Attachment 25-1 & 25-2*
☒ 2.	Plans, designs, and cross sections for the proposed collection and handling system.	*Attachment 25-4*
☒ 3.	Plans, designs, and cross-sections for on-site leachate treatment or disposal systems.	*Attachment 25-4*
☐ 4.	Description of on-site treatment system already in operation, including NPDES number, capability to treat leachate, and compliance status under The Clean Streams Law.	*N/A*
5.	If interim vehicular transportation to an off-site treatment facility is proposed, provide:	
☐ a.	Copy of signed contractual agreement with operator of off -site facility, or	*N/A*
☒ b.	Signed letter of intent from operator of the off-site facility to enter a contractual agreement for leachate treatment.	*Exhibit 25-4.1*
☐ c.	Copy of signed contractual agreement with the operator of a 2nd off-site facility as backup, or	*N/A*
☒ d.	Signed letter of intent from operator of the 2nd off-site facility to enter a contractual agreement f or leachate treatment.	*Exhibit 25-4.1*
☒ e.	Additional bond in amount sufficient to pay for the cost of vehicular transportation and off-site leachate treatment until final closure; if off-site treatment is negligent.	*Bonding Calcs.*
☐ f.	Submit plans, designs, and cross-sections for an on site pretreatment facility.	*N/A*
6.	If recirculation of raw or pretreated leachate is proposed in conjunction with another method, describe:	
☐ a.	Designs and cross-sections of leachate distribution method.	*N/A*
☐ b.	Methods to prevent leachate seeps and breakouts.	*N/A*
☐ c.	Methods to prevent odors, runoff, and ponding.	*N/A*
☒ 7.	Schedule and method for cleaning sludges from the leachate storage and treatment system, and a plan for disposing of such sludges.	*Attachment 25-4*
☒ 8.	Method for measuring average flow rate of leachate from landfill to leachate storage/treatment system.	*Attachment 25-4*
☒ 9.	Identify if leachate pumping occurs.	*Attachment 25-4*
☒ 10.	Plans and designs for secondary containment of underground pipes used for the transport of leachate from the liner system.	*Attachment 25-4*

FORM 25 – LEACHATE MANAGEMENT - PHASE II

ATTACHMENT 25-5

LEACHATE PUMP AND PIPING SYSTEM CALCULATIONS

Exhibit 25-5.3
Leachate Management Pump Station

These calculations have been prepared to estimate the pumping requirements for the proposed pump station in support of the proposed leachate evaporator. These calculations include conservative assumptions of leachate inflow, static head and forcemain length to the evaporator location. A pair of pump calculations have been prepared to represent the maximum anticipated HRT pressure and the minimum HRT pressure to estimate the anticipated range of pumping rates of the system.

Based on the estimated worst-case leachate flow from the southern expansion area previously estimated in Attachment 25-7 paired with physical parameters of the proposed forcemain, a typical pump selection has been made for the pump station. The selected pump is provided as an example, different pumps may be selected at the time of purchase / installation if similar or superior performance is anticipated. Additionally, as the landfill develops and matures, as leachate flowrates change, alternative pump sizing to better suit actual conditions can be selected.

This Exhibit also includes calculations to evaluate the strength of the proposed forcemain piping from the pump station to the leachate management area. As demonstrated by the calculations, the proposed 6-in SDR11 (carrier) / 10-in SDR11 (containment) piping is more than adequate to withstand anticipated construction loading and worst-case dead loads from future structural fill.

OBJECTIVE

Calculate the liquid capacity of the designed leachate pump station, select a pump to remov leachate from the sump and determine operating trigger levels for the pump.

PUMP STATION VOLUME

A round HDPE manhole will be installed and utilized for a pump station.

PUMP STATION VOLUME CALCULATION PARAMETERS	
Diameter	8 Feet
Storage Height	10 Feet
Total Liquid Volume	502.7 Cubic-Feet

SUMP VOLUME	
Liquid Depth (Feet)	Approximate Volume (Cubic-Feet)
0.00	0.0
2.00	100.5
4.00	201.1
6.00	301.6
8.00	402.1
10.00	502.7

The pump ON depth shall be established as 3-ft above the bottom of the pump station. Therefore, the pump station depth of 3-ft shown here represents the liquid capacity of the sump for pump operational purposes.

PUMP SELECTION

A pump may be selected by plotting the Total Dynamic Head (TDH) against manufacturer performance curves. The TDH calculation accounts for static (elevation) head, losses due to friction (as a function of flowrate) and minor losses resulting from fittings.

TDH = Hs + Hf + Hm

Where:

Hs = Static Head, Feet
Hf = Friction Head Loss, Feet

Hf = L / 100 * 0.203 * 100^1.85 * Q^1.85 / C^1.85 / D^4.87

Hm = 16 * (Q / 448.3)^2 / (2 * g * pi^2 * D^4)

L = Length, Feet
Q = Flowrate, gpm
C = Hazen Williams Roughness
D = Inside Diameter, Feet

PUMP DESIGN PARAMETERS		
Bottom of Pump Station Elevation	966.00	Feet
Peak Elevation (Top of Process Tank)	1035.00	Feet
Hose Length (pump station height)	10.00	Feet
Hose Diameter	3.00	Inch
Hose Roughness C	130.00	
Pipe 1 Length (Pumpstation to top of tank)	350.00	Feet
Pipe Diameter	6.00	Inch
Pipe Roughness C	155.00	
Pipe 2 Length	0.00	Feet
PIpe Diameter	0.00	Inch
Pipe Roughness C	0.00	
Sump Inflow Rate (Southern Expansion)	77.00	GPM
Sump Inflow Rate (worst case)	0.172	CFS

MINOR LOSS CALCULATION			
FITTING	**K - FACTOR**	**QUANTITY**	**TOTAL - K**
Entrance	0.50	1	0.50
Oultet	1.00	1	1.00
90 Degree Elbow	0.75	11	8.25
45 Degree Elbow	0.36	1	0.36
Check Valve	2.50	1	2.50
Reducer	0.50	0	
Increase	0.60	1	0.60
ECT Butterfly Valve Open	0.40	2	0.80
Ball Valve Open	0.05	1	0.05
Tee	1.00	2	2.00
Wye Fitting	0.50	1	0.50
HRT System	(1)	(1)	(1)
		Minor Loss Parameter K	**16.56**

(1) HRT System inlcudes additional TDH provided by the manufacturer (Pentair) as indicated below. The 161.7-ft of TDH is approximately 70-psi.

PUMP TDH CALCULATION

Static Head (Feet)	Flow Rate (GPM)	Hf, Friction Head Loss Hose (Feet)	Hf, Friction Head Loss Pipe 1 (Feet)	Total Hm Minor Losses (Feet)	TDH (Feet)	TDH + HRT (Feet)
69.00	30.00	0.03	0.03	0.03	69.09	230.79
69.00	35.00	0.04	0.04	0.04	69.12	230.82
69.00	40.00	0.06	0.05	0.05	69.16	230.86
69.00	45.00	0.07	0.06	0.07	69.20	230.90
69.00	50.00	0.08	0.07	0.08	69.23	230.93
69.00	55.00	0.10	0.09	0.10	69.29	230.99
69.00	60.00	0.12	0.10	0.12	69.34	231.04
69.00	65.00	0.14	0.12	0.14	69.40	231.10
69.00	70.00	0.16	0.14	0.16	69.46	231.16
69.00	75.00	0.18	0.15	0.19	69.52	231.22
69.00	80.00	0.20	0.17	0.21	69.58	231.28
69.00	85.00	0.23	0.20	0.24	69.67	231.37
69.00	90.00	0.25	0.22	0.27	69.74	231.44
69.00	95.00	0.28	0.24	0.30	69.82	231.52
69.00	100.00	0.31	0.26	0.33	69.90	231.60
69.00	105.00	0.33	0.29	0.37	69.99	231.69
69.00	110.00	0.36	0.31	0.40	70.07	231.77
69.00	115.00	0.40	0.34	0.44	70.18	231.88
69.00	120.00	0.43	0.37	0.48	70.28	231.98
69.00	125.00	0.46	0.40	0.52	70.38	232.08

By plotting these TDH values on a manufacturer's performance curve, a pump is selected. Heads calculated for worst case pump configuration.

PUMP OPERATION

Utilizing the selected pump, the operational criteria can be determined

ESTIMATED PUMP OPERATION PARAMETERS		
Pump On Depth	3.0	Feet
Pump Off Depth	1.0	Feet
Approximate Operating Pump Discharge	56.0	GPM

ESTIMATED PUMP OPERATION SUMMARY		
Approximate Operating Pump Discharge	0.125	CFS
Volume @ Pump On Depth (A)	150.0	Cubic-Feet
Volume @ Pump Off Depth (B)	50.0	Cubic-Feet
Operational Volume (C)=(A)-(B)	100.0	Cubic-Feet
Pump Run Time (Accounting for Inflow)	Continuous	Minutes
Sump Fill Time	9.7	Minutes

CONCLUSION

The design and operational requirements for the selected evaporator pump have been estimated for the proposed pump station.

REFERENCES

1 Metcalf & Eddy, Inc. WASTEWATER ENGINEERING: Collection and Pumping of Wastewater, McGraw Hill, New York, 1981
2 Chevron/Plexco, PLEXCO PIPING SYSTEMS MANUAL
3 Phillips Driscopipe, Inc., DRISCO PIPE MANUAL

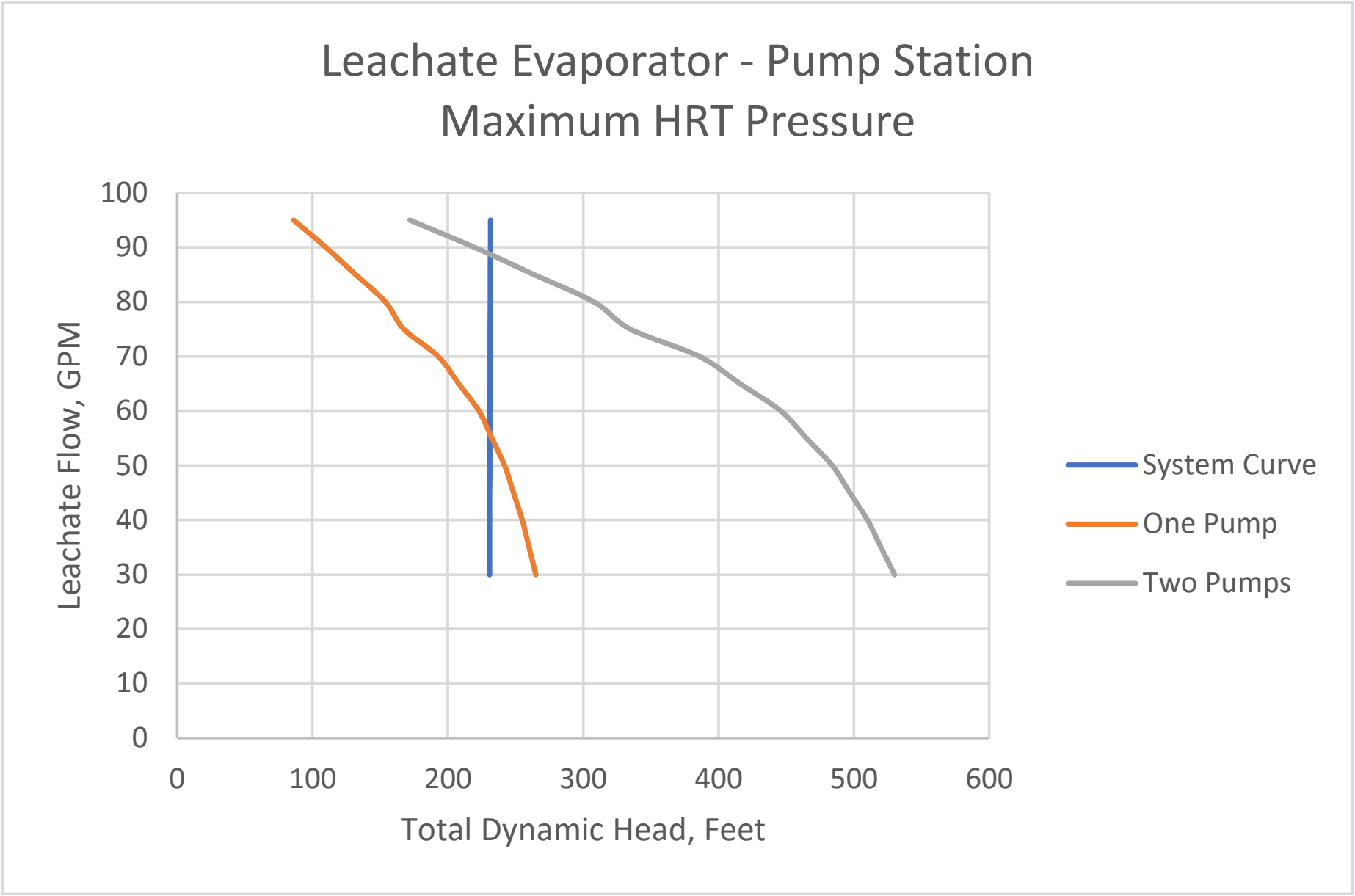
Leachate Evaporator - Pump Station
Maximum HRT Pressure
Leachate Flow, GPM
100
90
80
70
60
50
40
30
20
10
0
0
100
200
300
400
500
600
Total Dynamic Head, Feet
System Curve
One Pump
Two Pumps

OBJECTIVE

Calculate the liquid capacity of the designed leachate pump station, select a pump to remov leachate from the sump and determine operating trigger levels for the pump.

PUMP STATION VOLUME

A round HDPE manhole will be installed and utilized for a pump station.

PUMP STATION VOLUME CALCULATION PARAMETERS	
Diameter	8 Feet
Storage Height	10 Feet
Total Liquid Volume	502.7 Cubic-Feet

SUMP VOLUME	
Liquid Depth (Feet)	Approximate Volume (Cubic-Feet)
0.00	0.0
2.00	100.5
4.00	201.1
6.00	301.6
8.00	402.1
10.00	502.7

The pump ON depth shall be established as 3-ft above the bottom of the pump station. Therefore, the pump station depth of 3-ft shown here represents the liquid capacity of the sump for pump operational purposes.

PUMP SELECTION

A pump may be selected by plotting the Total Dynamic Head (TDH) against manufacturer performance curves. The TDH calculation accounts for static (elevation) head, losses due to friction (as a function of flowrate) and minor losses resulting from fittings.

TDH = Hs + Hf + Hm

Where:

Hs = Static Head, Feet
Hf = Friction Head Loss, Feet

Hf = L / 100 * 0.203 * 100^1.85 * Q^1.85 / C^1.85 / D^4.87

Hm = 16 * (Q / 448.3)^2 / (2 * g * pi^2 * D^4)

L = Length, Feet
Q = Flowrate, gpm
C = Hazen Williams Roughness
D = Inside Diameter, Feet

PUMP DESIGN PARAMETERS		
Bottom of Pump Station Elevation	966.00	Feet
Peak Elevation (Top of Process Tank)	1035.00	Feet
Hose Length (pump station height)	10.00	Feet
Hose Diameter	3.00	Inch
Hose Roughness C	130.00	
Pipe 1 Length (Pumpstation to top of tank)	350.00	Feet
Pipe Diameter	6.00	Inch
Pipe Roughness C	155.00	
Pipe 2 Length	0.00	Feet
PIpe Diameter	0.00	Inch
Pipe Roughness C	0.00	
Sump Inflow Rate (Southern Expansion)	77.00	GPM
Sump Inflow Rate (worst case)	0.172	CFS

MINOR LOSS CALCULATION			
FITTING	**K - FACTOR**	**QUANTITY**	**TOTAL - K**
Entrance	0.50	1	0.50
Oultet	1.00	1	1.00
90 Degree Elbow	0.75	11	8.25
45 Degree Elbow	0.36	1	0.36
Check Valve	2.50	1	2.50
Reducer	0.50	0	
Increase	0.60	1	0.60
ECT Butterfly Valve Open	0.40	2	0.80
Ball Valve Open	0.05	1	0.05
Tee	1.00	2	2.00
Wye Fitting	0.50	1	0.50
HRT System	(1)	(1)	(1)
		Minor Loss Parameter K	**16.56**

(1) HRT System inlcudes additional TDH provided by the manufacturer (Pentair) as indicated below. The 2.21 ft of TDH is approximately 1-psi.

PUMP TDH CALCULATION

Static Head (Feet)	Flow Rate (GPM)	Hf, Friction Head Loss Hose (Feet)	Hf, Friction Head Loss Pipe 1 (Feet)	Total Hm Minor Losses (Feet)	TDH (Feet)	TDH + HRT (Feet)
69.00	30.00	0.03	0.03	0.03	69.09	71.40
69.00	35.00	0.04	0.04	0.04	69.12	71.43
69.00	40.00	0.06	0.05	0.05	69.16	71.47
69.00	45.00	0.07	0.06	0.07	69.20	71.51
69.00	50.00	0.08	0.07	0.08	69.23	71.54
69.00	55.00	0.10	0.09	0.10	69.29	71.60
69.00	60.00	0.12	0.10	0.12	69.34	71.65
69.00	65.00	0.14	0.12	0.14	69.40	71.71
69.00	70.00	0.16	0.14	0.16	69.46	71.77
69.00	75.00	0.18	0.15	0.19	69.52	71.83
69.00	80.00	0.20	0.17	0.21	69.58	71.89
69.00	85.00	0.23	0.20	0.24	69.67	71.98
69.00	90.00	0.25	0.22	0.27	69.74	72.05
69.00	95.00	0.28	0.24	0.30	69.82	72.13
69.00	100.00	0.31	0.26	0.33	69.90	72.21
69.00	105.00	0.33	0.29	0.37	69.99	72.30
69.00	110.00	0.36	0.31	0.40	70.07	72.38
69.00	115.00	0.40	0.34	0.44	70.18	72.49
69.00	120.00	0.43	0.37	0.48	70.28	72.59
69.00	125.00	0.46	0.40	0.52	70.38	72.69

By plotting these TDH values on a manufacturer's performance curve, a pump is selected. Heads calculated for worst case pump configuration.

PUMP OPERATION

Utilizing the selected pump, the operational criteria can be determined

ESTIMATED PUMP OPERATION PARAMETERS		
Pump On Depth	3.0	Feet
Pump Off Depth	1.0	Feet
Approximate Operating Pump Discharge	100.0	GPM

ESTIMATED PUMP OPERATION SUMMARY		
Approximate Operating Pump Discharge	0.223	CFS
Volume @ Pump On Depth (A)	150.0	Cubic-Feet
Volume @ Pump Off Depth (B)	50.0	Cubic-Feet
Operational Volume (C)=(A)-(B)	100.0	Cubic-Feet
Pump Run Time (Accounting for Inflow)	32.5	Minutes
Sump Fill Time	9.7	Minutes

CONCLUSION

The design and operational requirements for the selected evaporator pump have been estimated for the proposed pump station.

REFERENCES

1 Metcalf & Eddy, Inc. WASTEWATER ENGINEERING: Collection and Pumping of Wastewater, McGraw Hill, New York, 1981
2 Chevron/Plexco, PLEXCO PIPING SYSTEMS MANUAL
3 Phillips Driscopipe, Inc., DRISCO PIPE MANUAL

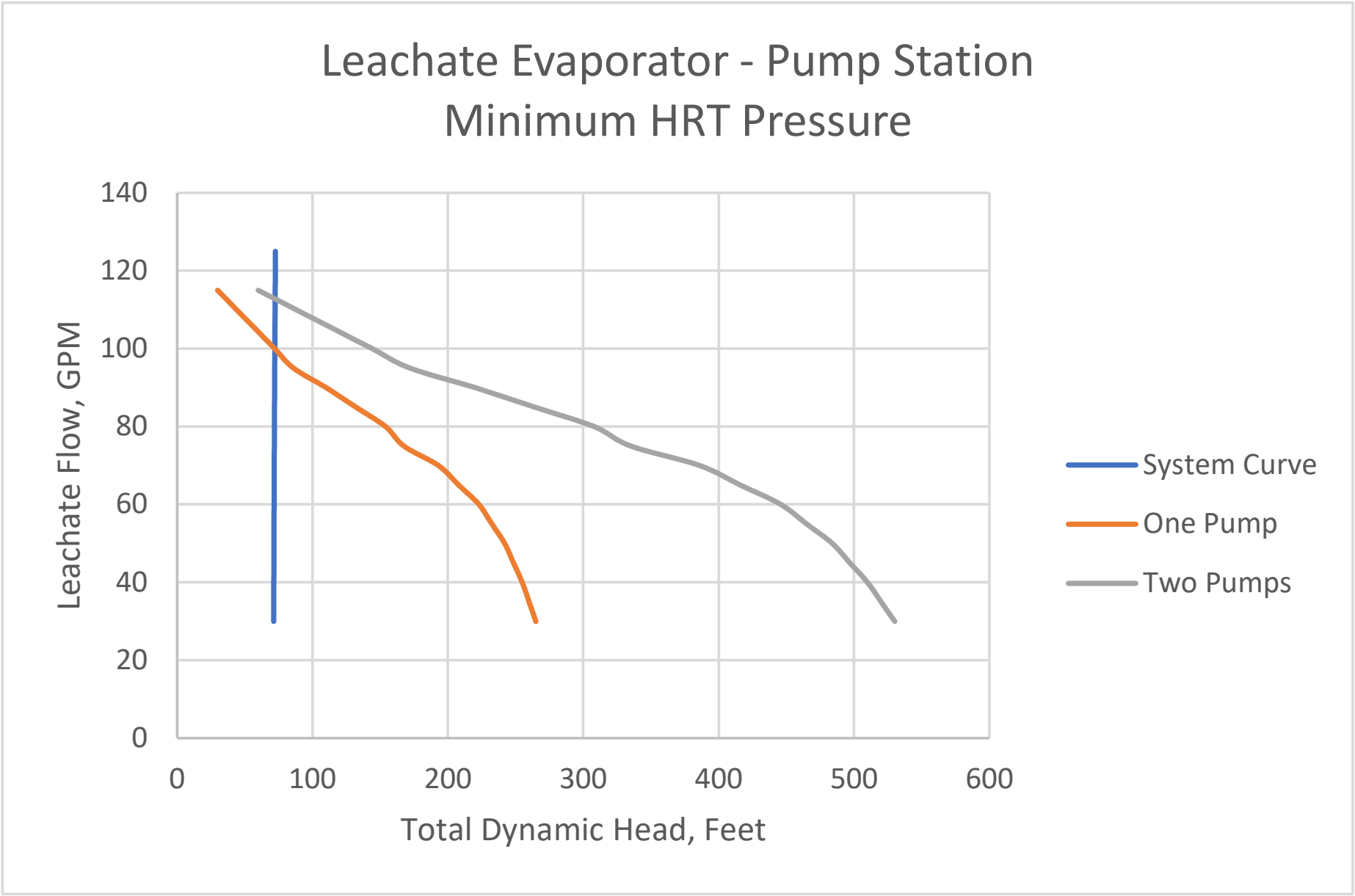
Leachate Evaporator - Pump Station
Minimum HRT Pressure
Leachate Flow, GPM
140
120
100
80
60
40
20
0
0
100
200
300
400
500
600
Total Dynamic Head, Feet
System Curve
One Pump
Two Pumps

SERIES 15 SurePump™

Flow Range 45-95 GPM

60 Hz

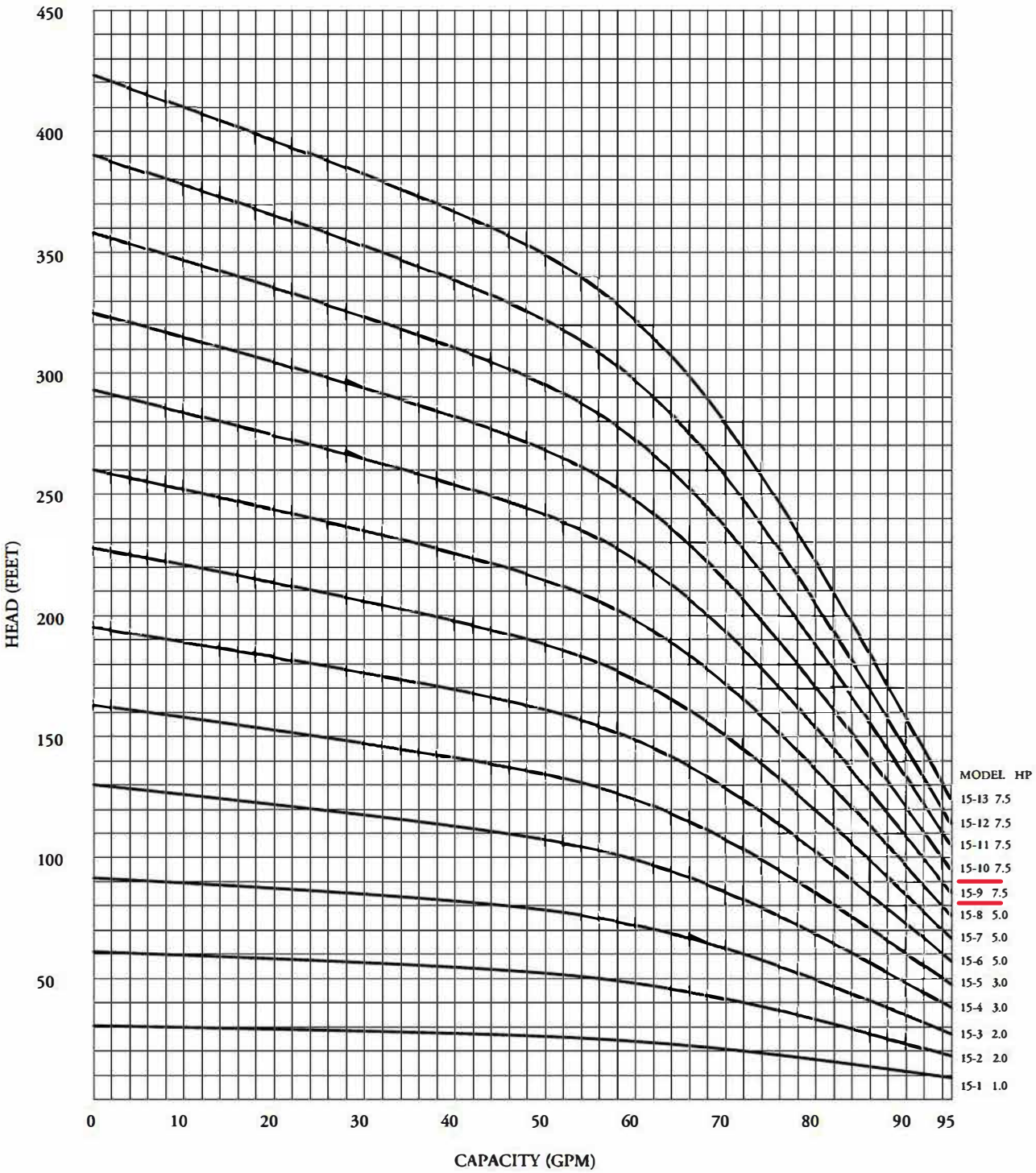

DATA SUBJECT TO CHANGE WITHOUT NOTICE

Select 1 15-9, 7.5-HP or similar. See pump calculations estimates of operating volumes.

© 2003 EPG Companies Inc.
SurePump is a Reg. TM of EPG Companies Inc.

SERIES 15 SUMP DRAINER SELECTION GUIDE

To select the appropriate sump drainer:

1. Select SINGLE or THREE PHASE, motor HORSEPOWER, and system supply VOLTAGE.
2. Determine the DISTANCE from the power supply to the pump.
3. Use the sump drainer size from the SUMP DRAINER column to find its respective dimensions on the following pages. MOTOR LEAD column shows minimum motor power cable size.

SINGLE PHASE MOTOR				
HORSEPOWER	VOLTAGE	DISTANCE FROM SERVICE ENTRANCE TO PUMP IN FEET	SUMP DRAINER	MOTOR LEAD
1.0	230	0 TO 225'	SIZE 5	14 GA
1.0	230	225' TO 360'	SIZE 5	12 GA
1.0	230	360' TO 565'	SIZE 5	10 GA
1.0	230	565' TO 890'	SIZE 6	8 GA
1.0	230	890' TO 1385'	SIZE 6	6 GA
2.0	230	0 TO 135'	SIZE 5	14 GA
2.0	230	135' TO 225'	SIZE 5	12 GA
2.0	230	225' TO 350'	SIZE 5	10 GA
2.0	230	350' TO 555'	SIZE 6	8 GA
2.0	230	555' TO 870'	SIZE 6	6 GA
3.0	230	0 TO 95'	SIZE 5	14 GA
3.0	230	95' TO 170'	SIZE 5	12 GA
3.0	230	170' TO 270'	SIZE 5	10 GA
3.0	230	270' TO 420'	SIZE 6	8 GA
3.0	230	420' TO 675'	SIZE 6	6 GA
5.0	230	0 TO 88'	SIZE 5	12 GA
5.0	230	88' TO 160'	SIZE 5	10 GA
5.0	230	160' TO 250'	SIZE 6	8 GA
5.0	230	250' TO 405'	SIZE 6	6 GA
7.5	230	0 TO 95'	SIZE 5	10 GA
7.5	230	95' TO 180'	SIZE 6	8 GA
7.5	230	180' TO 275'	SIZE 6	6 GA

continued on back

© 2003 EPG Companies Inc.
SurePump is a Reg. TM of EPG Companies Inc.

SERIES 15 SUMP DRAINER SELECTION GUIDE

THREE PHASE MOTORS				
HORSEPOWER	VOLTAGE	DISTANCE FROM SERVICE ENTRANCE TO PUMP IN FEET	SUMP DRAINER	MOTOR LEAD
1.0	200	0 TO 385'	SIZE 5	14 GA
1.0	200	385' TO 620'	SIZE 5	12 GA
1.0	200	620' TO 970'	SIZE 5	10 GA
1.0	200	970' TO 1535'	SIZE 6	8 GA
1.0	200	1535' TO 2400'	SIZE 6	6 GA
1.0	230	0 TO 500'	SIZE 5	14 GA
1.0	230	500' TO 820'	SIZE 5	12 GA
1.0	230	820' TO 1285'	SIZE 5	10 GA
1.0	230	1285' TO 2035'	SIZE 6	8 GA
1.0	230	2035' TO 3165'	SIZE 6	6 GA
1.0	460	0 TO 2070'	SIZE 5	14 GA
1.0	460	2070' TO 3300'	SIZE 5	12 GA
1.0	460	3300' TO 5190'	SIZE 5	10 GA
1.0	460	5190' TO 8160'	SIZE 6	8 GA
2.0	200	0 TO 215'	SIZE 5	14 GA
2.0	200	215' TO 351'	SIZE 5	12 GA
2.0	200	351' TO 550'	SIZE 5	10 GA
2.0	200	550' TO 870'	SIZE 6	8 GA
2.0	200	870' TO 1365'	SIZE 6	6 GA
2.0	230	0 TO 285'	SIZE 5	14 GA
2.0	230	285' TO 460'	SIZE 5	12 GA
2.0	230	460' TO 730'	SIZE 5	10 GA
2.0	230	730' TO 1150'	SIZE 6	8 GA
2.0	230	1150' TO 1805'	SIZE 6	6 GA
2.0	460	0 TO 1170'	SIZE 5	14 GA
2.0	460	1170' TO 1860'	SIZE 5	12 GA
2.0	460	1860' TO 2940'	SIZE 5	10 GA
2.0	460	2940' TO 4635'	SIZE 6	8 GA
2.0	460	4635' TO 7245'	SIZE 6	6 GA
3.0	200	0 TO 160'	SIZE 5	14 GA
3.0	200	160' TO 260'	SIZE 5	12 GA
3.0	200	260' TO 420'	SIZE 5	10 GA
3.0	200	420' TO 665'	SIZE 6	8 GA
3.0	200	665' TO 1045'	SIZE 6	6 GA
3.0	230	0 TO 215'	SIZE 5	14 GA
3.0	230	215' TO 350'	SIZE 5	12 GA
3.0	230	350' TO 555'	SIZE 5	10 GA
3.0	230	555' TO 890'	SIZE 6	8 GA
3.0	230	890' TO 1385'	SIZE 6	6 GA
3.0	460	0 TO 900'	SIZE 5	14 GA
3.0	460	900' TO 1440'	SIZE 5	12 GA
3.0	460	1440' TO 2265'	SIZE 5	10 GA
3.0	460	2265' TO 3570'	SIZE 6	8 GA
3.0	460	3570' TO 5580'	SIZE 6	6 GA

continued on next page

© 2003 EPG Companies Inc.
SurePump is a Reg. TM of EPG Companies Inc.

SERIES 15 SUMP DRAINER SELECTION GUIDE

THREE PHASE MOTORS				
HORSEPOWER	VOLTAGE	DISTANCE FROM SERVICE ENTRANCE TO PUMP IN FEET	SUMP DRAINER	MOTOR LEAD
5.0	200	0 TO 150'	SIZE 5	12 GA
5.0	200	150' TO 250'	SIZE 5	10 GA
5.0	200	250' TO 395'	SIZE 6	8 GA
5.0	200	395' TO 620'	SIZE 6	6 GA
5.0	230	0 TO 205'	SIZE 5	12 GA
5.0	230	205' TO 330'	SIZE 5	10 GA
5.0	230	330' TO 530'	SIZE 6	8 GA
5.0	230	530' TO 825'	SIZE 6	6 GA
5.0	460	0 TO 855'	SIZE 5	12 GA
5.0	460	855' TO 1350'	SIZE 5	10 GA
5.0	460	1350' TO 2120'	SIZE 6	8 GA
5.0	460	2120' TO 3330'	SIZE 6	6 GA
7.5	200	0 TO 180'	SIZE 6	10 GA
7.5	200	180' TO 275'	SIZE 6	8 GA
7.5	200	275' TO 440'	SIZE 6	6 GA
7.5	230	0 TO 140'	SIZE 6	12 GA
7.5	230	140' TO 230'	SIZE 6	10 GA
7.5	230	230' TO 375'	SIZE 6	8 GA
7.5	230	375' TO 585'	SIZE 6	6 GA
7.5	460	0 TO 610'	SIZE 6	12 GA
7.5	460	610' TO 960'	SIZE 6	10 GA
7.5	460	960' TO 1520'	SIZE 6	8 GA
7.5	460	1520' TO 2375'	SIZE 6	6 GA

© 2003 EPG Companies Inc.
SurePump is a Reg. TM of EPG Companies Inc.

SERIES 15 SIZE 5 WHEELED SUMP DRAINER

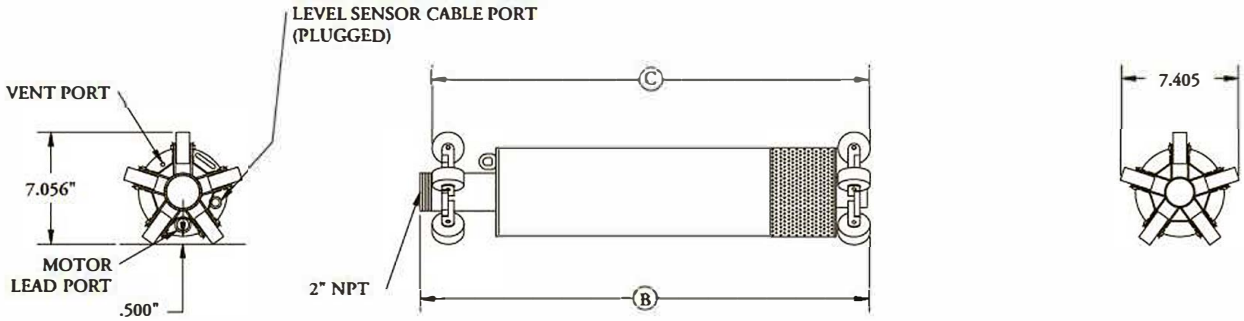

WSD

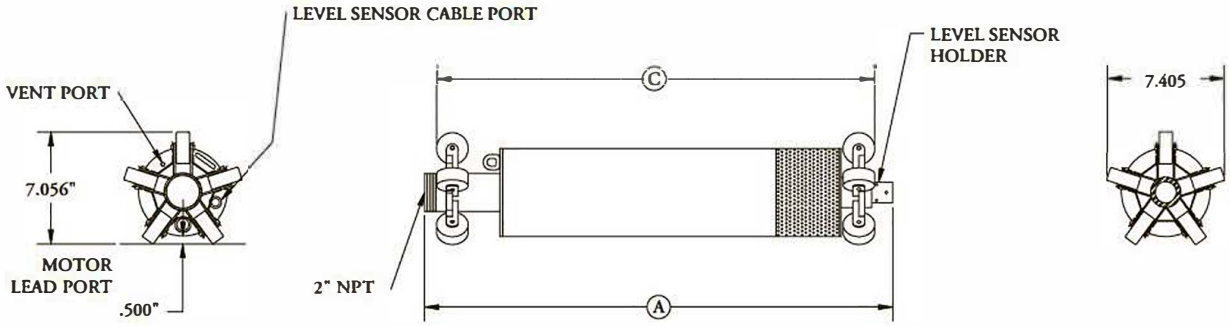

WSDPT

MODEL	HP	PHASE	A	B	C	*APPROX. SHIPPING WEIGHT	
						WSD	WSDPT
15-1	1.00	1	36.01	34.89	34.14	77.26	82.26
15-1	1.00	3	36.01	34.89	34.14	77.26	82.26
15-2	2.00	1	41.98	40.86	40.11	92.10	97.10
15-2	2.00	3	40.48	39.36	38.61	87.64	92.64
15-3	2.00	1	44.58	43.46	42.71	95.65	100.65
15-3	2.00	3	43.08	41.96	41.21	91.18	96.18
15-4	3.00	1	55.68	54.56	53.81	130.52	135.52
15-4	3.00	3	52.68	51.56	50.81	116.58	121.58
15-5	3.00	1	58.28	57.16	56.41	134.06	139.06
15-5	3.00	3	55.28	54.16	53.41	120.12	125.12
15-6	5.00	1	66.88	65.76	65.01	158.48	163.48
15-6	5.00	3	60.88	59.76	59.01	137.61	142.61

MODEL	HP	PHASE	A	B	C	*APPROX. SHIPPING WEIGHT	
						WSD	WSDPT
15-7	5.00	1	69.48	68.36	67.61	162.03	167.03
15-7	5.00	3	63.48	62.36	61.61	141.15	146.15
15-8	5.00	1	71.98	70.83	70.11	165.47	170.47
15-8	5.00	3	65.98	64.86	64.11	144.60	149.60
15-9	7.50	1	77.06	75.93	75.18	171.44	176.44
15-9	7.50	3	71.06	69.93	69.18	150.57	155.57

NOTE: ALL DIMENSIONS ARE IN INCHES.

*SHIPPING WEIGHT INCLUDES
WSD: CRATE, 50' OF 12-4 MOTOR LEAD, 50' OF 3/16" SS CABLE.
WSDPT: CRATE, 50' OF 12-4 MOTOR LEAD, 50' OF 3/16" SS CABLE,
LEVEL SENSOR AND CABLE.

© 2003 EPG Companies Inc.
SurePump is a Reg. TM of EPG Companies Inc.

SERIES 15 SIZE 6 WHEELED SUMP DRAINER

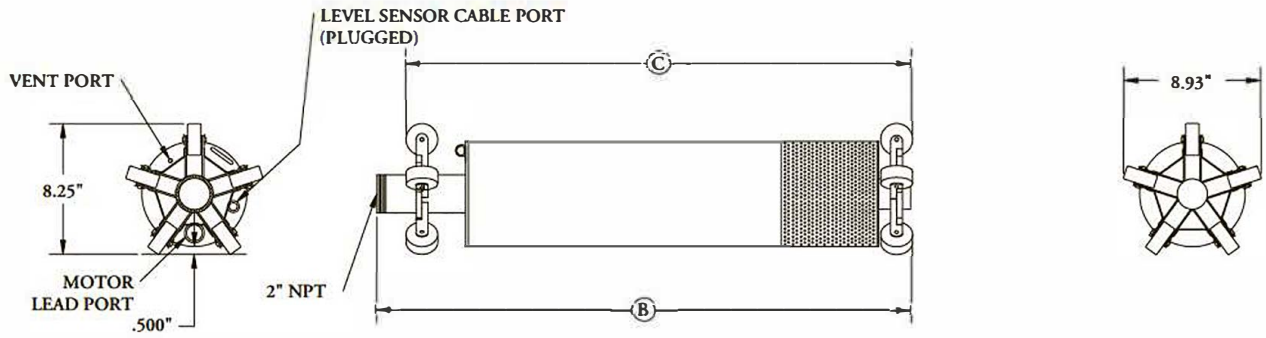

WSD

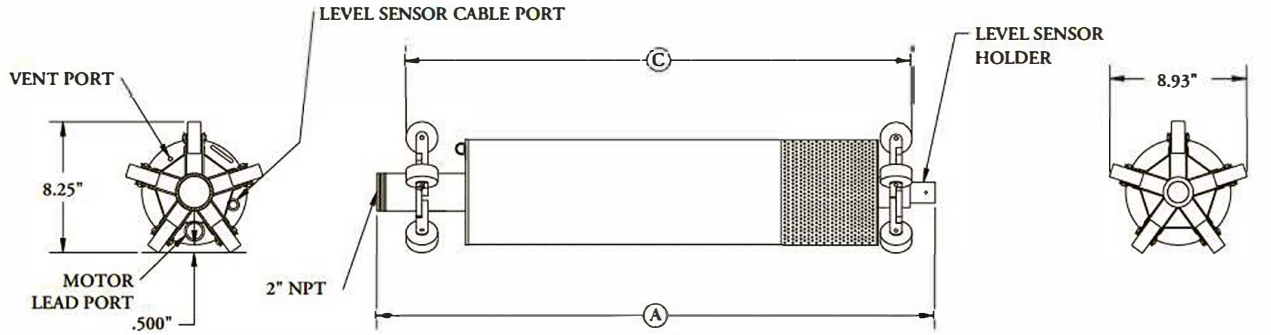

WSDPT

MODEL	HP	PHASE	A	B	C	*APPROX. SHIPPING WEIGHT	
						WSD	WSDPT
15-1	1.00	1	41.42	40.29	38.44	94.75	99.75
15-1	1.00	3	41.42	40.29	38.44	94.75	99.75
15-2	2.00	1	47.39	46.26	44.41	110.21	115.21
15-2	2.00	3	45.89	44.76	42.91	105.59	110.59
15-3	2.00	1	49.99	48.86	47.01	114.02	119.02
15-3	2.00	3	48.49	47.36	45.51	109.40	114.40
15-4	3.00	1	61.09	59.96	58.11	150.03	155.03
15-4	3.00	3	58.09	56.96	55.11	135.79	140.79
15-5	3.00	1	63.69	62.56	60.71	153.85	158.85
15-5	3.00	3	60.69	59.56	57.71	139.60	144.60

MODEL	HP	PHASE	A	B	C	*APPROX. SHIPPING WEIGHT	
						WSD	WSDPT
15-6	5.00	1	72.29	71.16	69.31	179.15	184.15
15-6	5.00	3	66.29	65.16	63.31	157.66	162.66
15-7	5.00	1	74.89	73.76	71.91	182.97	187.97
15-7	5.00	3	68.89	67.76	65.91	161.47	166.47
15-8	5.00	1	77.39	76.26	74.41	186.67	191.67
15-8	5.00	3	71.39	70.26	68.41	165.18	170.18
15-9	7.50	1	82.46	81.34	79.49	193.16	198.16
15-9	7.50	3	76.46	75.34	73.49	171.67	176.67
15-10	7.50	3	79.24	78.12	76.27	226.68	231.68
15-11	7.50	3	81.84	80.72	78.87	230.49	235.49
15-12	7.50	3	84.44	83.32	81.47	234.30	239.30
15-13	7.50	3	87.04	85.92	84.07	238.12	243.12

NOTE: ALL DIMENSIONS ARE IN INCHES.

*SHIPPING WEIGHT INCLUDES
WSD: CRATE, 50' OF 12-4 MOTOR LEAD, 50' OF 3/16" SS CABLE.
WSDPT: CRATE, 50' OF 12-4 MOTOR LEAD, 50' OF 3/16" SS CABLE,
LEVEL SENSOR AND CABLE.

© 2003 EPG Companies Inc.
SurePump is a Reg. TM of EPG Companies Inc.

SERIES 15 SIZE 5 VERTICAL SUMP DRAINER

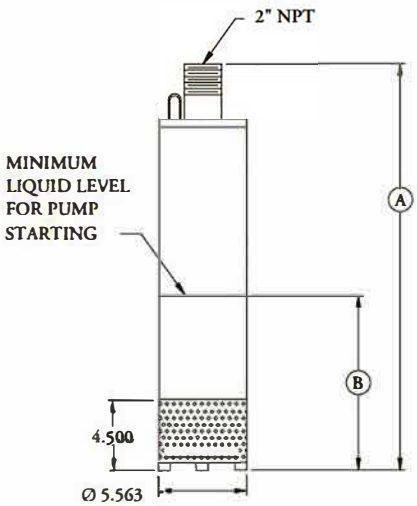

VSD

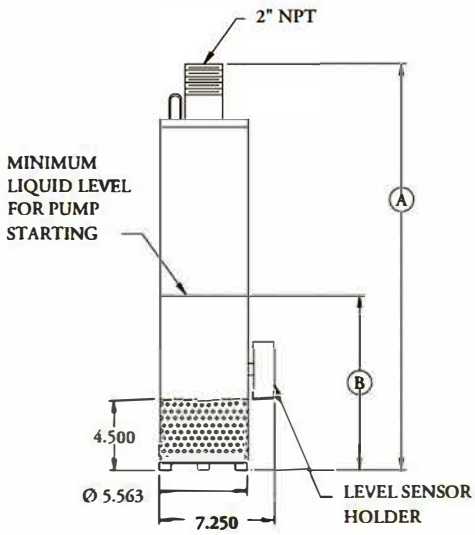

VSDPT

MODEL	HP	PHASE	A	B	*APPROX. SHIPPING WEIGHT	
					VSD	VSDPT
15-1	1.00	1	31.38	24	70.68	75.68
15-1	1.00	3	31.38	24	70.68	75.68
15-2	2.00	1	37.35	27	87.52	92.52
15-2	2.00	3	35.85	25	83.05	88.05
15-3	2.00	1	39.95	27	93.07	98.07
15-3	2.00	3	38.45	25	88.60	93.60
15-4	3.00	1	51.05	35	129.94	134.94
15-4	3.00	3	48.05	32	116.00	121.00
15-5	3.00	1	53.65	35	135.48	140.48
15-5	3.00	3	50.65	32	121.54	126.54
15-6	5.00	1	62.25	41	161.90	166.90
15-6	5.00	3	56.25	35	141.03	146.03
15-7	5.00	1	64.85	41	167.45	172.45
15-7	5.00	3	58.85	35	146.57	151.57
15-8	5.00	1	67.35	41	172.89	177.89
15-8	5.00	3	61.35	35	152.02	157.02
15-9	7.50	1	72.43	41	180.86	185.86
15-9	7.50	3	66.43	35	159.99	164.99

NOTE: ALL DIMENSIONS ARE IN INCHES.

*SHIPPING WEIGHT INCLUDES
VSD: CRATE, 50' OF 12-4 MOTOR LEAD, 50' OF 3/16" SS CABLE.
VSDPT: CRATE, 50' OF 12-4 MOTOR LEAD, 50' OF 3/16" SS CABLE,
LEVEL SENSOR AND CABLE.

© 2003 EPG Companies Inc.
SurePump is a Reg. TM of EPG Companies Inc.

Mike Zucatti

From: DeGraff, Michael <Michael.DeGraff@Pentair.com> on behalf of DeGraff, Michael
Sent: Tuesday, June 30, 2020 9:05 AM
To: Mike Zucatti; Kolstad, David
Cc: Brian Stewart; Nick Stork; Rich Walton
Subject: RE: WSL - HRT Equipment

Hi Mike,

Clean DP is very low, during our test runs at 70 gpm the clean DP across the entire rental system was about 1 PSI.

Best Regards,

Michael DeGraff
Pentair – Process Technologies
Regional Account Manager, Northeastern United States

See Pentair's newest style of gas coalescing elements, recommended for service at some of our more challenging customer sites -
https://www.linkedin.com/posts/michael-degraff-35141026_just-released-pentairs-newest-technology-activity-6675824489927868416-v7lp

Mobile: 609-498-5862
Email: Michael.DeGraff@Pentair.com

Confidentiality Note: This e-mail contains privileged and confidential information intended for the use of the addresses name above. If you are not the intended recipient of this e-mail, you are hereby notified that you must not disseminate copy or take any action in respect of any information contained in it. If you have received this e-mail in error, please notify the sender immediately by e-mail and immediately destroy this email and its attachments.

From: Mike Zucatti <mzucatti@civildesign.org>
Sent: Tuesday, June 30, 2020 8:55 AM
To: DeGraff, Michael <Michael.DeGraff@Pentair.com>; Kolstad, David <David.Kolstad@Pentair.com>
Cc: Brian Stewart <bstewart@nobleenviro.com>; Nick Stork <nstork@nobleenviro.com>; Rich Walton <rwalton@nobleenviro.com>
Subject: RE: WSL - HRT Equipment

EXTERNAL Email

Thank you, Michael

Can you provide an approximate lower range DP representative of operation just after element changeout?

Michael E. Zucatti, P.E.
Civil Design Solutions, Inc.
1331 State Avenue
Coraopolis, PA 15108
Office Phone: 412-299-2700 ext. 157
Cell Phone: 717-448-5613
Office Fax: 412-299-2922

From: DeGraff, Michael <Michael.DeGraff@Pentair.com>
Sent: Monday, June 29, 2020 6:11 PM

To: Mike Zucatti <mzucatti@civildesign.org>; Kolstad, David <David.Kolstad@Pentair.com>
Cc: Brian Stewart <bstewart@nobleenviro.com>; Nick Stork <nstork@nobleenviro.com>; Rich Walton <rwalton@nobleenviro.com>
Subject: RE: WSL - HRT Equipment

Hello Mike,

Below is a list of each stage within the HRT train, with the listed "Max Allowable Differential Pressure" being measured from the inlet to the outlet at each stage. The maximum DP is recommend to maintain acceptable separation efficiency, and so we recommend element change-out at these max values.

Equipment	Max Allowable Differential Pressure (PSIG)
1st Stage Vmax (Screen)	10
2nd Stage Vmax (Cartridges)	25
ProcessOR	25
HRT	10

The HRT skid is the flow limiting step within the system. The max suggested flow is 200 gpm.

Let us know if we can provide any additional information.

Best Regards,

Michael DeGraff
Pentair – Process Technologies
Regional Account Manager, Northeastern United States

See Pentair's newest style of gas coalescing elements, recommended for service at some of our more challenging customer sites -
https://www.linkedin.com/posts/michael-degraff-35141026_just-released-pentairs-newest-technology-activity-6675824489927868416-v7lp

Mobile: 609-498-5862
Email: Michael.DeGraff@Pentair.com

Confidentiality Note: This e-mail contains privileged and confidential information intended for the use of the addresses name above. If you are not the intended recipient of this e-mail, you are hereby notified that you must not disseminate copy or take any action in respect of any information contained in it. If you have received this e-mail in error, please notify the sender immediately by e-mail and immediately destroy this email and its attachments.

From: Mike Zucatti <mzucatti@civildesign.org>
Sent: Monday, June 29, 2020 5:27 PM
To: DeGraff, Michael <Michael.DeGraff@Pentair.com>; Kolstad, David <David.Kolstad@Pentair.com>
Cc: Brian Stewart <bstewart@nobleenviro.com>; Nick Stork <nstork@nobleenviro.com>; Rich Walton <rwalton@nobleenviro.com>
Subject: WSL - HRT Equipment

EXTERNAL Email

Good Afternoon Michael and David,

I wanted to see if you could please provide the following information specific to the HRT system supplied to Westmoreland Sanitary Landfill.

1. Estimated Minor Loss K factors for each component of the HRT to generate a system curve for pump calculations.
2. Peak Flow Capacity of each component of the HRT. Specifically, the lowest of the peaks is what we are interested in.
    a. Each cut sheet lists 70-gpm Flow Rate under design flow. Currently, the pump station is designed with one pump at normal operating conditions to pump at 64-gpm but under higher flows a second pump kicks in and they pump together for a combined flow of 122-gpm. We need to know if the HRT can handle this flowrate and slightly higher. Understandable at higher flows there will be more frequent filter change out.

Thank you!

Michael E. Zucatti, P.E.
Civil Design Solutions, Inc.
1331 State Avenue
Coraopolis, PA 15108
Office Phone: 412-299-2700 ext. 157
Cell Phone: 717-448-5613
Office Fax: 412-299-2922

FORM 25 – LEACHATE MANAGEMENT - PHASE II

ATTACHMENT 25-5

LEACHATE PUMP AND PIPING SYSTEM CALCULATIONS

Exhibit 25-5.4
Storage Tank Inline Booster Pump

This calculation has been prepared to estimate the pumping requirements for the proposed inline booster pump proposed to be installed outside of the leachate storage tanks to transfer leachate the proposed leachate management pump station. From the pump station, leachate may then be transferred to the leachate management area.

Based on the estimated pumping needs for the temporary storage of leachate to be returned to the evaporator, a typical pump selection has been made. The selected pump is provided as an example, different pumps may be selected at the time of purchase / installation if similar or superior performance is anticipated. Additionally, as the landfill develops and matures, as leachate flowrates change, alternative pump sizing to better suit actual conditions can be selected.

OBJECTIVE

Select an inline pump to transfer liquids from the existing storage tanks to the leachate management pump station.

PUMP SELECTION

A pump may be selected by plotting the Total Dynamic Head (TDH) against manufacturer performance curves. The TDH calculation accounts for static (elevation) head, losses due to friction (as a function of flowrate) and minor losses resulting from fittings.

TDH = Hs + Hf + Hm

Where:

Hs = Static Head, Feet
Hf = Friction Head Loss, Feet

Hf = L / 100 * 0.203 * 100^1.85 * Q^1.85 / C^1.85 / D^4.87

Hm = 16 * (Q / 448.3)^2 / (2 * g * pi^2 * D^4)

L = Length, Feet
Q = Flowrate, gpm
C = Hazen Williams Roughness
D = Inside Diameter, Feet

PUMP DESIGN PARAMETERS		
Pump Invert	944.00	Feet
Peak Elevation (Pump Station Return Line)	972.00	Feet
Hose Length (pump station height)	1.00	Feet
Hose Diameter	2.00	Inch
Hose Roughness C	130.00	
Pipe 1 Length (Pumpstation to top of tank)	450.00	Feet
Pipe Diameter	4.00	Inch
Pipe Roughness C	155.00	
Pipe 2 Length	0.00	Feet
PIpe Diameter	0.00	Inch
Pipe Roughness C	0.00	
Sump Inflow Rate (Southern Expansion)	77.00	GPM
Sump Inflow Rate (worst case)	0.172	CFS

MINOR LOSS CALCULATION			
FITTING	**K - FACTOR**	**QUANTITY**	**TOTAL - K**
Entrance	0.50	1	0.50
Oultet	1.00	1	1.00
90 Degree Elbow	0.75	0	
45 Degree Elbow	0.36	2	0.72
Check Valve	2.50	1	2.50
Reducer	0.50		
Increase	0.60	1	0.60
ECT Butterfly Valve Open	0.40	0	
Ball Valve Open	0.05	0	
Tee	1.00	0	
Wye Fitting	0.50	0	
Other	2.00	1	2.00
		Minor Loss Parameter K	**7.32**

PUMP TDH CALCULATION

Static Head (Feet)	Flow Rate (GPM)	Hf, Friction Head Loss Hose (Feet)	Pipe 1 (Feet)	Pipe 2 (Feet)	Total Hm Minor Losses (Feet)	TDH (Feet)
28.00	10.00	0.00	0.03	0.00	0.01	28.04
28.00	15.00	0.01	0.07	0.00	0.02	28.10
28.00	20.00	0.01	0.12	0.00	0.03	28.16
28.00	25.00	0.02	0.19	0.00	0.05	28.26
28.00	30.00	0.02	0.26	0.00	0.07	28.35
28.00	35.00	0.03	0.35	0.00	0.09	28.47
28.00	40.00	0.04	0.45	0.00	0.12	28.61
28.00	45.00	0.05	0.56	0.00	0.15	28.76
28.00	50.00	0.06	0.68	0.00	0.19	28.93
28.00	55.00	0.07	0.81	0.00	0.22	29.10
28.00	60.00	0.09	0.95	0.00	0.27	29.31
28.00	65.00	0.10	1.10	0.00	0.31	29.51
28.00	70.00	0.11	1.26	0.00	0.36	29.73
28.00	75.00	0.13	1.43	0.00	0.42	29.98
28.00	80.00	0.15	1.62	0.00	0.47	30.24
28.00	85.00	0.16	1.81	0.00	0.54	30.51
28.00	90.00	0.18	2.01	0.00	0.60	30.79
28.00	95.00	0.20	2.22	0.00	0.67	31.09
28.00	100.00	0.22	2.44	0.00	0.74	31.40
28.00	105.00	0.24	2.67	0.00	0.82	31.73

By plotting these TDH values on a manufacturer's performance curve, a pump is selected. Heads calculated for worst case pump configuration.

PUMP OPERATION

Utilizing the selected pump, the operational criteria can be determined

ESTIMATED PUMP OPERATION PARAMETERS		
Pump On to be set when storage tanks will be drained		
Pump Off depth is manual to be turned off at desired tank level		
Approximate Operating Pump Discharge	58.0	GPM

ESTIMATED PUMP OPERATION SUMMARY		
Approximate Operating Pump Discharge	0.129	CFS
Approx Tank Volume at 20%	30000.0	Cubic-Feet
Approx. Tank Volume at 10%	15000.0	Cubic-Feet
Operational Volume (C)=(A)-(B)	15000.0	Cubic-Feet
Pump Run Time to Drain 10% of Tank	1934.5	Minutes

CONCLUSION

The design and operational requirements has been estimated for the proposed inline pump for the storage tanks to transfer liquids to the pump station.

REFERENCES

1 Metcalf & Eddy, Inc. WASTEWATER ENGINEERING: Collection and Pumping of Wastewater, McGraw Hill, New York, 1981
2 Chevron/Plexco, PLEXCO PIPING SYSTEMS MANUAL
3 Phillips Driscopipe, Inc., DRISCO PIPE MANUAL

Series 9 SurePump™

Flow Range 20 - 50 GPM

60 Hz

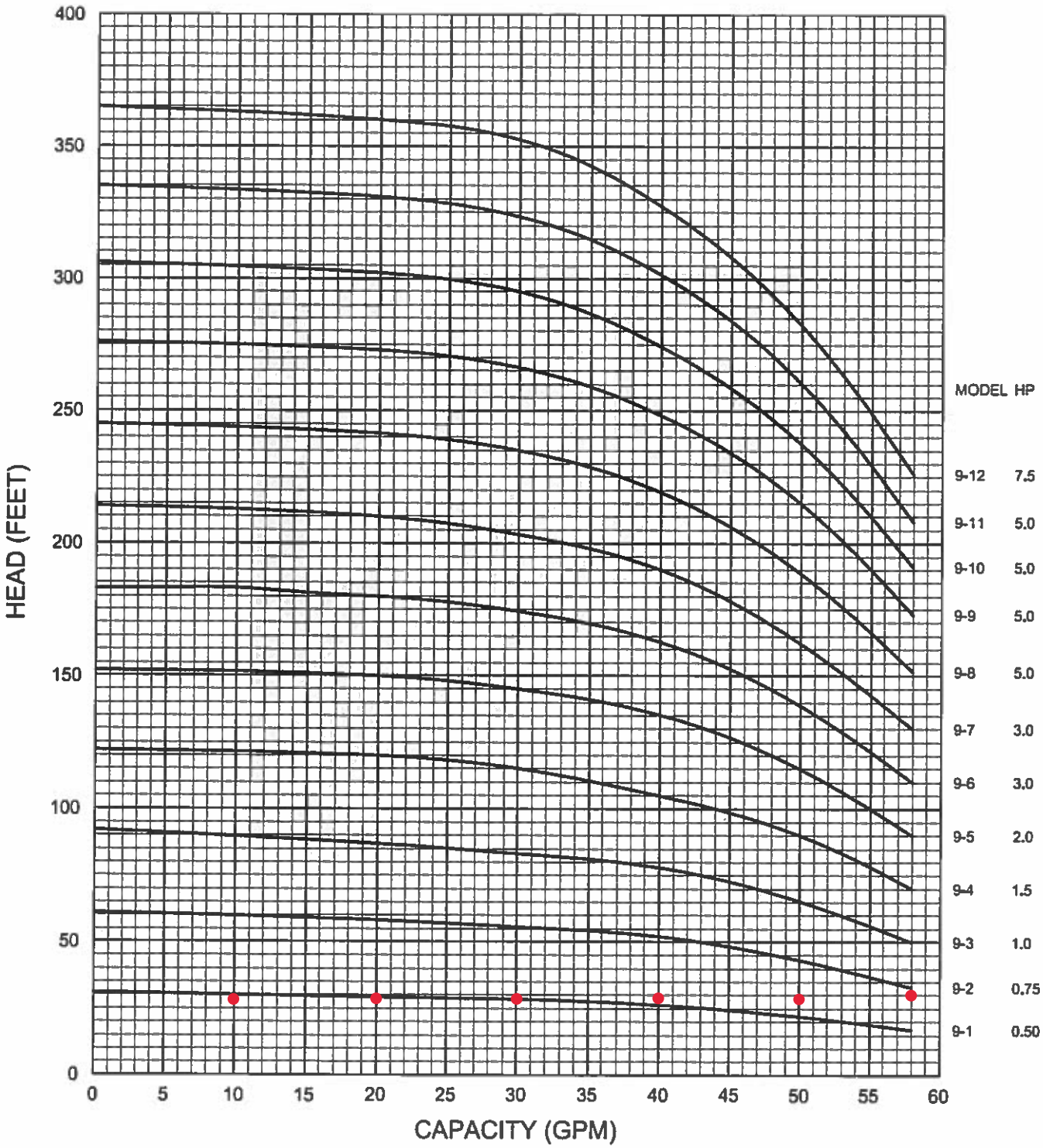

SPECIFICATIONS SUBJECT TO CHANGE WITHOUT NOTICE

09949-0000

Select 1 9-1, 0.50 HP at approx. 30-gpm or 1 9-2, 0.75 HP at approx. 58-gpm

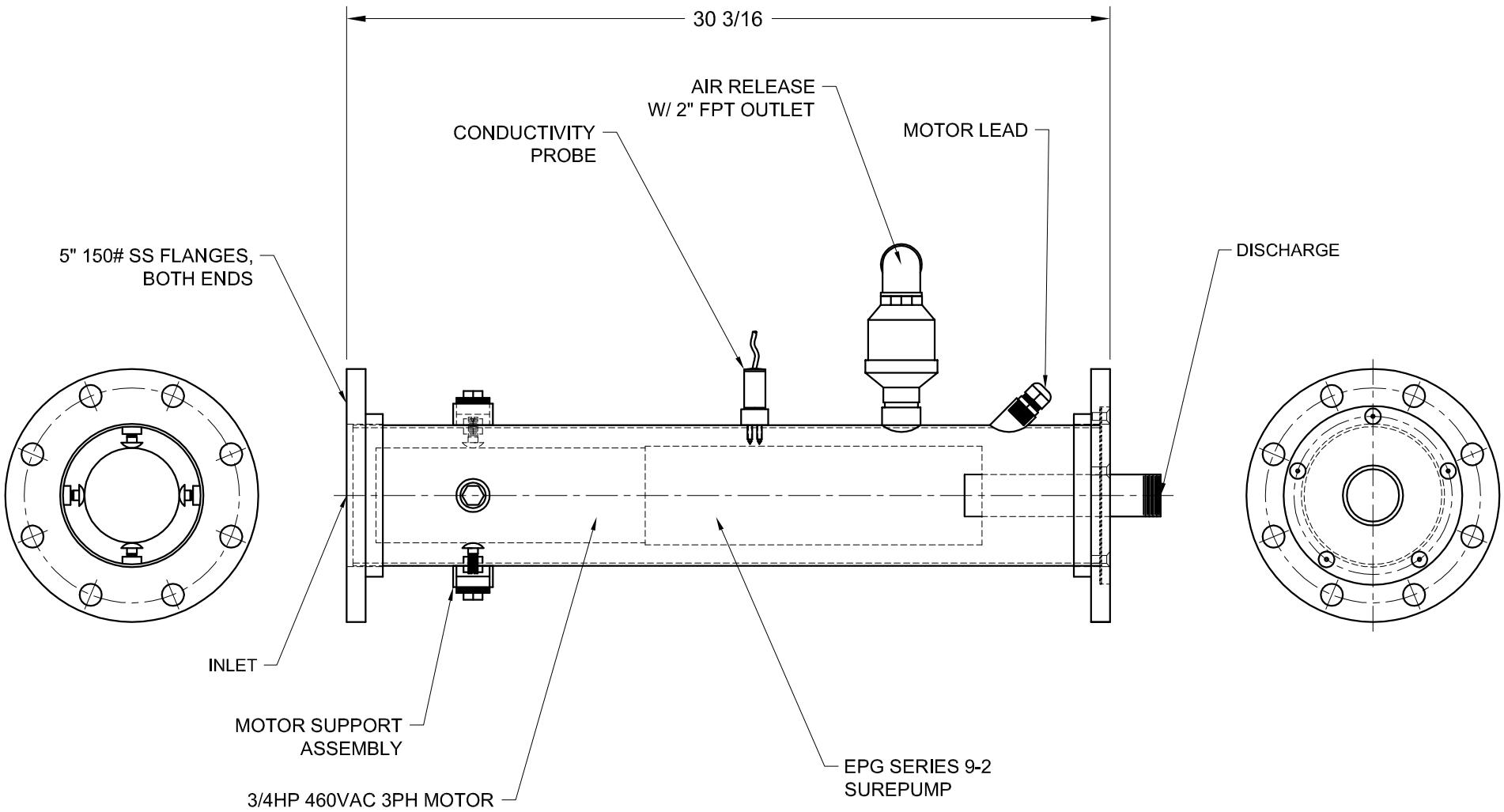

NOTES:

1. Dimensions are approximate and subject to change.
2. Construction is all 304 Stainless Steel.

JOB No.	XX-XXXXX

THIS DRAWING IS THE PROPERTY OF
EPG COMPANIES FOR REFERENCE ONLY.
© EPG Companies Inc. 2016

EPG COMPANIES

IN-LINE BOOSTER PUMP
BESP 9-2

TOLERANCES (EXCEPT AS NOTED)	REVISIONS NO.	DATE	BY
DECIMAL ± 0.010	1		
FRACTIONAL ± 1/32"	2		
ANGULAR ± 1°	3		
	4		
	5		

DESIGN RCC	MAT'L	DATE 05-28-20	
DRAWN EJH	SCALE 1:6	REV.NO. R0	
CHK'D	REF: 09986-0000	DWG.NO. 12626-0000C	
APP'D			

FORM 25 – LEACHATE MANAGEMENT - PHASE II

ATTACHMENT 25-8

LEACHATE EVAPORATOR

Leachate Evaporator

The proposed leachate management system included with this Minor Permit Modification includes the installation of a leachate evaporator as the primary method of leachate disposal with trucking for offsite disposal as an interim and emergency backup method. The proposed evaporator unit is a 45,000-gallon per day concentrator system to be provided by Heartland Water Technology (Heartland). The proposed evaporator will be installed near the existing LFG flare just northeast of the gas plant building along with a new leachate process tank and Hydrocarbon Recovery Technology (HRT) system.

The proposed system is capable of processing 45,000 gallons of leachate per day. A proposed pump station to be located near Manhole 3B will include a duplex pump system where one pump may operate individually or two pumps simultaneously in cases where higher flows are required for increased inflows. Pumped leachate can first pass through the HRT unit and enter into a process tank or if necessary, it may be directed back into the existing gravity leachate conveyance line. The HRT and or the evaporator may be bypassed during high flows in excess of the evaporator capacity or during maintenance. From the process tank, leachate will be fed via gravity to the leachate evaporator's inline feed pump or via gravity to the main existing gravity leachate conveyance line where it may be temporarily stored in the existing onsite storage tanks. From the storage tanks it may be directed back to the proposed pump station through a new inline booster pump and then up to the evaporator. Alternatively, leachate may be directed via gravity to the truck loadout area where it may be trucked for offsite disposal under emergency scenarios.

With this proposed unit being located near the existing gas plant, some of the existing lighting will be usable for equipment operation. Additional exterior lighting will be added as needed for safety purposes but is estimated to be minimal. The proposed evaporator is located greater than 300 feet from any residential structure and with this offset paired with the natural vegetative buffers, nuisances will be minimized. The evaporator will be operated by hardwired electric supplies and will be hard-wired and integrated into the site's existing electrical network.

Process Tank

The proposed process tank will include an approximate 91,000-gallon (nominal) glass fused to steel tank. Secondary containment will be provided by an additional tank installed around the process tank. This tank will consist of a kuolon-powder coated epoxy tank with an approximate 127,000-gallon (nominal) capacity. A geotechnical investigation was performed for the proposed process tank to assist with foundation design and is included here. A foundation design was prepared by the tank manufacturer. The foundation construction and tank construction will be completed by the manufacturer. The contractor will follow ACI specifications for the concrete construction. Following completion of construction, the applied sealer will cure for 7 to 10 days and the contactor will perform a

leak test. The tank will be filled with water and allowed to sit for 48-hours, if there is any observed leakage, the contractor will repair / remediate the source of the leak and repeat the testing procedure until no leakage is observed over a 48-hour period.

A secondary containment calculation, geotechnical report and manufacturer's documentation is provided here.

Operations

Leachate will pass through the proposed evaporator and the liquids will be greatly reduced by separating it into smaller particles thereby providing a greater surface area to be placed in contact with heat gas. A fraction of the liquids will remain after evaporation occurs and will be discharged as a sludge into roll-off boxes, sealed vacuum boxes or similar. The cooled gases will be sent to atmosphere through an exhaust stack. The heat utilized for the evaporation process will be generated by burning purchased natural gas through an enclosed flare included with the Heartland system. Additionally, equipment will be installed to recover heat generated by the Thermal Oxidizer (TOX) currently being installed as part of the Gas Plant operations.

The volume and concentration of the discharged sludge product will vary according to quantity and quality of leachate being evaporated. Heartland has provided a conservative estimate for the unit to produce a discharge volume of up to ten-percent of the inflow volume, thus meaning up to 4,500-gallons per day of sludges may be produced. Additionally, the quality of byproduct will be a concentrated liquid approximately proportional to the volume reduction. The sludge byproduct will be discharged into a large dual-contained frac box (approx. 17,000-gallons) to be located just outside of the secondary containment area. Sufficient storage will be provided to collect a minimum of three (3) working days of leachate discharge. Landfill personnel will check the storage container throughout each working day. Additionally, the storage box will be equipped with a visual high-level alarm.

A vacuum truck or roll-off truck with a sealed roll-off container will the load the residual sludge from the dual-contained storage box via pump. The vacuum truck may utilize the truck's pump or a sludge pump to be placed within the dual-contained storage box and a roll-off truck with a sealed box would utilize a pump within the dual-contained storage box. It is currently anticipated that one full load (~4,500-gallons) will be removed from the dual-contained residuals box per day. The loaded vacuum truck or roll-off box will be hauled to the solidification pit by landfill personnel for solidification as-needed. Solidification will be performed in accordance with the approved Form 14 and Form P. Following solidification, a sample will be collected for Form U testing. The waste will then be loaded into a waste box and will be transported to the entrance where it will pass through the fixed portal radiation

detectors in accordance with the facility's Form X. In the event that radiation is detected at levels exceeding 10 uR/hr above background, the appropriate response set forth in the approved Form X will be implemented. **Additionally, exceedances above background will be tracked as required by the TENORM Monthly Disposal Balance for the facility. In the event that Monthly Source Term Allocation (MSTA) would be reached, the procedures set forth in the Evaporator Residuals Contingency Plan included as Exhibit 25-8.1 will be followed.**

Once the box meets the Form X requirements for disposal, the loaded box will then be transported to **an area within the lined disposal footprint** where it will be staged awaiting Form U approval. Initially, every box will be tested. However, once sufficient data has been collected to establish the quality and consistency of the residual material, a reduced testing frequency may be proposed to the PADEP for approval. The disposal of these sludges will not include the payment of PADEP disposal fees since these sludges are by-products removed from the landfill waste mass.

Summary and Design Reference

The proposed Evaporator and other proposed changes to the leachate management system are further described in the Form 25 Narrative and Attachments as well as the revised Permit Drawings included with this Minor Permit Modification. Schematics and product data from the supplier (Heartland) are included with this attachment.

FORM 25 – LEACHATE MANAGEMENT - PHASE II

ATTACHMENT 25-8

LEACHATE EVAPORATOR

Exhibit 25-8.1
Evaporator Residuals Contingency Plan

INTRODUCTION

This Evaporator Residuals Contingency Plan (Contingency Plan) has been prepared to set forth procedures for managing the disposal of residual wastes generated during the leachate evaporation process in the event the Monthly Source Term Allocation (MSTA) would be reached. As outlined in Attachment 25-8, residuals generated from the evaporation process will be discharged into a dual-contained storage container from which the residuals will then loaded and hauled to the solidification pit in accordance with Form 14 (if solidification is needed). Once solidified, a representative sample will be collected for Form U testing (at a frequency agreed to by PADEP) and the solidified waste will be transported through the fixed portal radiation detectors in accordance with Form X. If the box does not result in a fixed portal alarm as a result of the reading being less than 10 uR/hr above background, the box will be staged within the lined non-closed disposal footprint awaiting Form U approval as summarized below. Should the box exceed 10 uR/hr above background, Form X and the procedures outlined below will be followed. This determination will be made on a per container basis regardless of how many containers are represented by a single Form U sample and testing.

WASTE HANDLING PROCEDURE

Evaporator residuals will be staged within the non-closed lined disposal area prior to PADEP's receipt or approval of the analytical testing. Following solidification, the following waste handling procedures will be utilized as part of waste staging while awaiting approval for disposal.

- The solidified evaporator residuals will pass through the scales and fixed portal detectors. A log shall be maintained of all staged evaporator residual waste loads. The following records will be maintained on site prior to PADEP waste approval: radiation pass or fail (radiation reading if the alarm sounds), a unique container identification number and gross vehicle weight. Scale house personnel shall generate a magnetic or adhesive "NOT APPROVED FOR DISPOSAL" label which shall include the date of solidification / processing of the load and the container identification number. Each label shall be affixed to the unapproved evaporator residuals containers so that it is clearly visible while in the staging area.

- Gross vehicle weights prior to staging and disposal will be tracked but all containers will be final weighed prior to disposal. The container identification number or other unique ID shall be utilized to track the load. Weights recorded at the time of initial processing of the container for staging will be recorded but not utilized as the disposal weight. All loads will be reweighed following PADEP approval of the material for disposal and a waste disposal ticket will be completed. If a unique identification

number is not located on the waste container, scale house personnel shall assign an identification number which will be added to the container.

- The initial gross vehicle weight will be also be utilized to estimate load source term if the fixed portal alarms are sounded to anticipate if there is potential for reaching the MSTA. Should there be any concern for reaching the MSTA, the alternative disposal procedure presented below may be followed.

- Several types of containers may be present within the staging area at one time. All containers shall be equipped with lids or tarps. All tarps and lids will be designed to prevent water infiltration during staging.

- The loaded container shall be staged within non-closed portions of the lined landfill disposal area. Staging within the landfill area may include container placement at the edge of the active disposal area or within in-active portions of the landfill.

- The loaded containers shall remain staged until the analytical lab testing is completed and the material is approved for disposal by Westmoreland Sanitary Landfill and the PADEP. If the chemical analysis of the waste stream equals or exceeds a constituent(s) permit limit, then the waste stream shall be subject to further chemical analysis of at least four (4) samples. A determination shall be made for the analytical results assuming a normal distribution and performing a 90% one-tailed confidence interval of the mean for the regulated constituent(s). If the material is not approved for disposal, the alternative disposal procedure presented below may be followed.

- Upon PADEP approval for disposal of the evaporator residuals, the containers will be visually inspected for free liquids, if possible. During the staging period, liquids may separate from the solids. If required, the load may be re-mixed within the container to re-incorporate free liquid, solidification agents may not be added during the mixing in the staging area, the liquid will be drained from the container into a solidification vessel, or the entire load will be transferred to a solidification vessel for proper processing.

- The load shall then be removed from the staging area (processed for solidification, if needed) and re-processed through the landfill entrance area with radiation monitoring, recording of the radiation levels if the alarms are sounded, recording of a gross weight and the creation of a landfill scale ticket. After this, any weight ticket previously created shall be discarded and the container shall be removed from the staged container list. If an alarm is sounded, Form X shall be followed and if appropriate,

the radiation level shall be recorded and the load shall be tracked with the TENORM Monthly Disposal Balance spreadsheet for the facility. Should there be any concern for reaching the MSTA, the alternative disposal procedure presented below may be followed. Under normal circumstances, with the exception of waste loads which may exceed the MSTA, staged loads shall be removed from the staging area within five working days from approval for disposal.

ALTERNATIVE DISPOSAL PROCEDURE

The following waste handling procedures may be followed in the event that staged evaporator residual boxes are required to be counted towards the MSTA. Loads may also be hauled off-site to appropriately permitted disposal facility(ies) as desired.

Scenario A – MSTA Remaining, Normal Disposal

All evaporator residual loads which sound the radiation alarm by exceeding 10 uR/hr above background will be tracked in the Monthly Disposal Balance Spreadsheet for the facility. If the spreadsheet determines that there is more than 1,000 MSTA after disposal of the load, the load may be disposed of in the landfill and no additional measures are taken.

Scenario B – Less than 1,000 MSTA

If the Monthly Disposal Balance Spreadsheet determines that there will be less than 1,000 MSTA after disposal of the load, the load may be disposed of in the landfill. The remaining operating days in the calendar month will be evaluated as well as the number of currently staged boxes. Estimated load source terms recorded during initial processing prior to staging for currently staged boxes will be utilized to evaluate if the current staged boxes may be disposed of in the current calendar month.

1. If there is not an anticipated concern with reaching the MSTA, no further actions required.
2. If there is a concern for reaching the MSTA for the current calendar month but it is anticipated that all loads may be disposed of the in following calendar month, disposal of additional loads will continue as allowed by the MSTA and once the MSTA is reached, loads may be kept in the staging area following Form U approval until the following calendar month.
3. If there is an immediate concern for reaching the MSTA for the current calendar month as well as the following calendar month, the landfill facility will begin to look at alternative appropriately permitted facilities for disposal. Once the facility reaches the MSTA, the procedures listed in Scenario C and D should be followed.

Scenario C – MSTA Reached

If the Monthly Disposal Balance Spreadsheet determines that the MSTA limit was not reached prior to the load disposal; however, it has been reached after disposal of the load, the load may be disposed of in the landfill. However, the remaining operating days in the calendar month will be evaluated as well as the number of currently staged boxes. Estimated load source terms recorded during initial processing prior to staging for currently staged boxes will be utilized to evaluate concerns with disposal of currently staged boxes.

1. If the MSTA for the current calendar month has been reached but it is anticipated that all loads may be disposed of in the following calendar month and there are less than 10-calendar days left in the month, loads may be kept in the staging area following Form U approval until the following calendar month.

2. If the MSTA for the current calendar month has been reached and it is anticipated that not all loads may be disposed of in the following calendar month or there are more than 10-calendar days left in the month, alternative appropriately permitted facilities will be evaluated for disposal. If new evaporator residuals which have the potential to be counted towards the MSTA are being staged, any staged box that receives Form U approval that would be counted towards the MSTA should be hauled offsite to an appropriately permitted facility within five working days of Form U approval.

Scenario D – MSTA Exceeded

If the Monthly Disposal Balance Spreadsheet determines that the MSTA limit would be exceeded after disposal of the load, the load should be directed back to the staging area to evaluate currently staged boxes.

1. If it is anticipated that this load returned to staging as well as all loads currently in the staging area may be disposed of in the following calendar month and there are less than 10-calendar days left in the month, loads may be kept in the staging area following Form U approval until the following calendar month.

2. If it is anticipated that this load returned to staging combined with all loads currently in the staging area may NOT be disposed of in the following calendar month OR there are more than 10-calendar days left in the month, alternative appropriately permitted facilities will be utilized for disposal. Any load which receives Form U approval that would be counted towards the

MSTA should be hauled offsite to an appropriately permitted facility until the following calendar month restarts the MSTA.

Scenario E – Non-Approval of Form U

In the event that a staged waste box is not granted Form U approval, regardless of the remaining MSTA, the box shall be hauled to an appropriately permitted facility within five working days of non-approval of the Form U and receipt of all approvals necessary to transport the load and for it acceptance at the receiving facility.

The DEP shall be notified of any evaporator residuals waste boxes required to be hauled offsite. At a minimum, information provided should include; the reason for being hauled offsite (Form U or MSTA), date the box was hauled from the site to an appropriately permitted facility, the name and permit ID of the disposal facility.

FORM 25 – LEACHATE MANAGEMENT - PHASE II

ATTACHMENT 25-10

LEACHATE TRUCKING

Summary

The proposed leachate management system included with this Minor Permit Modification includes the installation of a leachate evaporator as the primary method of leachate disposal with trucking for offsite disposal as an interim method until the leachate evaporator is installed and as an emergency backup thereafter. Westmoreland Sanitary Landfill currently has written acceptance to haul leachate to the City of Alliance Municipal Authority in Alliance, Ohio, Seneca Landfill, Inc in Butler County, Pennsylvania, Westerly Waste Water Treatment Plant in Butler County, Pennsylvania and the Eastern Ohio Regional Wastewater Authority in Bellaire, Ohio. WSL is currently trucking to these facilities using internal trucks operated by WSL personnel. WSL previously held contracts with several outside haulers where an agreement could be re-activated if needed in the future.

Copies of the written acceptance letters from each of the POTW facilities are included Attachment 25-4.

Trucking Operations

Tracking of leachate trucking is performed through a multi-step process. Prior to beginning transportation of a load, each driver (WSL personnel) completes a Residual Waste Log for each truck load. This log is provided to WSL personnel and is maintained on site. Once the load has been transported to its destination, drivers are required to sign-in at each disposal facility. Additionally, trucking logs including information such as driver name, truck identification, load volume, data and time of delivery are completed each day for each load. These logs are provided to WSL on a monthly basis. The residual waste logs, driver sign in sheets and trucking logs are maintained by WSL personnel on site.

These logs are cross-checked to confirm that the number of leachate loads hauled from WSL are then accepted at one of the approved locations.

Trucking Requirements

Calculations are included in Attachment 25-2 to analyze historical leachate flow data to estimate a daily leachate flow rate to be used for evaluating the proposed evaporator and estimate trucking requirements for offsite disposal. The calculations resulted in an overall average daily leachate flow volume of 63,550 gallons per day. The proposed evaporator has a capacity of 45,000 gallons per day bringing the immediate overall average trucking need to 18,550 gallons per day. However, as demonstrated through the Historical leachate flows, the average daily flows have been decreasing such that the overall average daily leachate flow over the past 3 months of data (November 2019 through January 2020) results in an overall average daily flow of approximately 49,600-gal per day which is an excess of 4,600-gal per day beyond the capacity of the leachate evaporator. The site is continuing to evaluate methods of leachate reduction and by continuing to do so, it is believed that this overall long-

term average daily flow will decrease below the evaporator capacity of 45,000-gallons per day.

The following approaches will be taken / evaluated in an attempt to reduce leachate generation at the site.

- Reduced Working Face – the working face will be minimized to the maximum extent practicable in order to reduce / minimize leachate generation. It is estimated that the working size may be reduced by approximately 10,000-sf or an area approximately 100-ft by 100-ft. It could then further be estimated leachate reduction could be reduced by approximately 10,000-sf * (45-inches average annual rainfall) * (1-ft / 12-inches) * (7.48-gal / 1-cf) * (25% approx. estimated reduction of leachate through evaporation / runoff with thicker cover soil) / 365-days = 192-gal/day.

- Soil Wedge over Exposed Protective Cover – the landfill perimeter currently includes a significant amount of exposed protective cover which greatly contributes to leachate generation. Currently, the existing footprint of the landfill includes approximately 1,700-lf of perimeter (excluding the Cell S6A tie-in currently under construction) with potentially exposed protective cover. The top of the existing baseliner sideslopes and the toe of the existing soil covered waste slopes form a wedge which can collect runoff from and direct it into exposed protective cover areas. By filling in this wedge with soil, surface water runoff which normally would be transmitted into the protective cover and treated as leachate may be directed to stormwater. Leachate reduction could be estimated by the total precipitation estimated to come in contact directly with the exposed protective cover area combined with the estimated runoff from any drainage area that would be diverted through the addition of the soil wedge. From a review of existing drawings, a preliminary estimate of leachate reduction through the soil wedge over exposed protective cover is equal to the following.

  Estimated leachate reduction = 1,300-lf (exposed perimeter length) * 5-ft (average exposed protective cover width) * (45-inches average annual rainfall) * (1-ft / 12-inches) * (7.48-gal / 1-cf) * / 365-days = 500-gal/day. An additional reduction in the amount of runoff from the upslope areas was estimated assuming an approximate 5-ac contributing area, a conservative CN of 80 and an average annual rainfall of 45-inches to be approximately 1,200-gallons per day. Preliminary estimates of leachate reduction from filling in exposed protective cover with a soil wedge are a total of 1,700-gal/day.

Stormwater from areas with stabilized intermediate cover soil will be directed to perimeter ditches by gravity. Stabilization of intermediate cover slopes may include the establishment of vegetation, tracking and application of mulch or other stabilization methods to reduce erosion of the slope and the discharge of sediment laden water. Any leachate seep(s) identified on slopes where surface water is being directed to perimeter ditches shall be immediately repaired. Until such time that the seep(s) are repaired, the runoff shall be separated from the surface ditches/channels or directed into the leachate collection system to allow for treatment of liquid as leachate.

- **Temporary Tarps – these may be utilized over intermediate cover areas for significant reduction of stormwater infiltration resulting in reduced leachate generation. Temporary tarps will typically consist of fine grading existing intermediate cover slopes, installing a 30-mil or 40-mil geomembrane, anchoring the temporary tarp with sand bags or other weights and installing stormwater diversion berms adjacent to the temporary tarp area to control stormwater inflow as needed.**

  Estimated leachate reduction per acre of temporary tarp = 43,560-sf * (45-inches average annual rainfall) * (1-ft / 12-inches) * (7.48-gal / 1-cf) * / 365-days * 0.75 (accounting for typical runoff / evaporation with intermediate cover) = 2,500-gal/day per acre of tarp.

  The facility has previously utilized temporary tarps and has an existing approval to install temporary tarps on the eastern side of the landfill. The facility is currently evaluating a closure project on the eastern side of the landfill and the configuration of the western side of the landfill will be changing in the near future with the ongoing construction of Cell S6(A) and subsequent waste placement. Temporary tarps will be evaluated considering the configuration of the landfill following completion of Cell S6(A), the closure currently under consideration and future development. Following future evaluations, a request will be submitted to the PADEP in the form of a Cover Letter, Calculations and Drawings for the sitewide use of temporary tarps.

Trucking Analysis and Leachate Trucking Flowchart

As demonstrated in the calculations discussed above, current overall average daily leachate discharge is 63,550 gallons per day. Currently, WSL personnel checks the existing leachate storage tanks on a daily basis to evaluate trucking needs.

A Leachate Trucking Flowchart has been prepared and is included with this Attachment to assist with leachate storage tank level and transportation management. This flowchart can be followed by site personnel on a daily basis during landfill operating days. WSL personnel will check each storage tank and process tank level and follow this flowchart for transportation management.

THE FOLLOWING CHANGES ARE PRESENTED HERE FOR DRAWINGS
1. Replace the Title Sheet and Drawing L6B with those included here.

SANITARY LANDFILL
PHASE II
MINOR PERMIT MODIFICATION
ROSTRAVER TOWNSHIP, WESTMORELAND COUNTY
PADEP NO: 100277

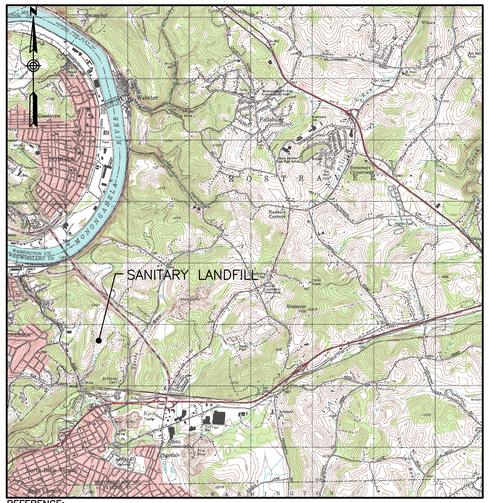

REFERENCE:
U.S.G.S. 7.5' TOPOGRAPHIC QUADRANGLE MAPPING FOR:
BRUSH VALLEY, PENNSYLVANIA, DATED: 1963, PHOTOREVISED: 1981.
BOLIVAR, PENNSYLVANIA, DATED: 1964, REVISED: 1993.
INDIANA, PENNSYLVANIA, DATED: 1963, PHOTOREVISED: 1981.
NEW FLORENCE, PENNSYLVANIA, DATED: 1964, REVISED: 1993.
SCALE: 1"=2000' AS SHOWN.

LOCATION MAP

APPROXIMATE SCALE

0 2000 4000 FEET

NOTE:

THESE DRAWINGS ACCOMPANY AND ARE PART OF THE PERMIT APPLICATION DOCUMENTS TITLED, "WESTMORELAND WASTE, LLC SANITARY LANDFILL, NORTH AND SOUTH EXPANSION PHASE II MAJOR PERMIT MODIFICATION", DATED DECEMBER 2001, REVISED NOVEMBER 2002 BY G.N. RICHARDSON AND ASSOCIATES, INC. AND RZI ENVIRONMENTAL MANAGEMENT CONSULTANTS.

PREPARED FOR:

WESTMORELAND SANITARY LANDFILL

111 CONNER LANE
BELLE VERNON, PA 15012

PREPARED BY:

CIVIL DESIGN SOLUTIONS, INC.
1331 State Ave. • Coraopolis, PA 15108
(412)299-2700 • (412)299-2922

LIST OF DRAWINGS

SHEET	DRAWING TITLE	PREPARED BY	REVISION NO.
1	TITLE / COVER SHEET	CDS	E2
2	EXISTING SITE CONDTITIONS	RZI/GNRA	2
3	SITE DEVELOPEMENT PLAN	CDS	E
4	SUBGRADE PLAN – SOUTH EXPANSION	CDS	E
5	SUBGRADE PLAN – NORTH EXPANSION	CDS	A
6	TOP OF PROTECTIVE COVER – SOUTH EXPANSION	CDS	E1
7	TOP OF PROTECTIVE COVER – NORTH EXPANSION	CDS	A2
8	PHASE S4–S3–A	RZI	5
8A	PHASE S4–S3–B	RZI	0
9A	PHASE S3–S2–A	RZI/GNRA	8
9B	PHASE S3–S2–B	RZI	8
10	PHASE S2–S1	RZI	7
11	PHASE S4 (THIS DRAWING HAS BEEN REMOVED)	RZI	2
12	PHASE S5	RZI	4
13	PHASE S6	RZI	3
14	PHASE N1	RZI	3
15	PHASE N2	RZI	3
16	PHASE S7	RZI	3
17	PHASE S8	RZI	3
18	PHASE N3	RZI/GNRA	2
19	PHASE N4	RZI/GNRA	2
20	PHASE N5	RZI/GNRA	2
21	PHASE N6	RZI/GNRA	2
22	PHASE N7	RZI/GNRA	2
23	FINAL GRADING & DRAINAGE PLAN – SOUTH EXPANSION	RZI/GNRA	3
24	FINAL GRADING & DRAINAGE PLAN – NORTH EXPANSION	RZI/GNRA	2
25	CROSS SECTION A–A	RZI/GNRA	3
26	CROSS SECTION B–B	RZI/GNRA	3
27	CROSS SECTION C–C	CDS	A
28	CROSS SECTION D–D	RZI/GNRA	2
29	CROSS SECTION E–E	RZI/GNRA	2
30	CROSS SECTION F–F	RZI/GNRA	2
31	CROSS SECTION G–G	RZI/GNRA	2
32	CROSS SECTION H–H	RZI/GNRA	2
33	CROSS SECTION I–I	RZI/GNRA	2

SHEET	DRAWING TITLE	PREPARED BY	REVISION NO.
34	CROSS SECTION J–J	RZI/GNRA	2
35	CROSS SECTION K–K	RZI/GNRA	3
36	CROSS SECTION L–L	CDS	A
37	PERIMETER SECTION AND BERM DETAILS	RZI/GNRA	1
38	LINER DETAILS (SHEET 1 OF 2)	RZI/GNRA	2
39	LINER DETAILS (SHEET 2 OF 2)	CDS	C
40	LEACHATE COLLECTION DETAILS (SHEET 1 OF 7)	CDS	C
41	LEACHATE COLLECTION DETAILS (SHEET 2 OF 7)	CDS	E1
42	LEACHATE COLLECTION DETAILS (SHEET 3 OF 7)	CDS	C
43	LEACHATE COLLECTION DETAILS (SHEET 4 OF 7)	RZI/GNRA	2
43A	LEACHATE COLLECTION DETAILS (SHEET 5 OF 7)	RZI/GNRA	3
43B	LEACHATE COLLECTION DETAILS (SHEET 6 OF 7)	RZI/GNRA	2
43C	LEACHATE COLLECTION DETAILS (SHEET 7 OF 7)	RZI	2
44	LEACHATE RISER PUMP HOUSE DETAILS	RZI/GNRA	2
45	LEACHATE MANAGEMENT PLAN AND DETAILS	CDS	E1
45A	LEACHATE MANAGEMENT PLAN AND DETAILS	CDS	C1
45B	LEACHATE MANAGEMENT AREA DETAILS	CDS	E2
45C	LEACHATE MANAGEMENT AREA PLAN	CDS	E1
46	LEACHATE MANHOLE DETAILS	CDS	C1
47	STORMWATER MANAGEMENT PLAN	RZI/GNRA	2
48	SEDIMENTATION BASIN PLAN – EXISTING	CDS	D2
49	SEDIMENTATION BASIN D PLAN & SECTIONS	RZI/GNRA	2
50	SEDIMENTATION BASIN E PLAN & SECTIONS	RZI/GNRA	2
51	SEDIMENTATION P LAN F PLAN & SECTIONS	RZI/GNRA	2
51A	SEDIMENTATION BASIN G PLAN & SECTIONS	RZI/GNRA	1
52	STORMWATER MANAGEMENT DETAILS (SHEET 1 OF 3)	CDS	D1
53	STORMWATER MANAGEMENT DETAILS (SHEET 2 OF 3)	CDS	D2
54	STORMWATER MANAGEMENT DETAILS (SHEET 3 OF 3)	CDS	B
55	PERIMETER DRAINAGE CHANNEL PLAN & PROFILE	RZI/GNRA	2
56	NORTHERN EXPANSION ACCESS ROAD PLAN & PROFILE	CDS	E
57	–– (SHEET REMOVED) ––	CDS	B
58	GAS MANAGEMENT PLAN	CDS	E
59	GAS MANAGEMENT DETAILS (SHEET 1 OF 2)	CDS	B1
60	GAS MANAGEMENT DETAILS (SHEET 2 OF 2)	CDS	B
61	FINAL COVER DETAILS	CDS	A2
62	MISCELLANEOUS DETAILS	RZI/GNRA	2

NOTES:

1. THESE DRAWINGS WERE ORIGINALLY PREPARED BY G.N. RICHARDSON AND ASSOCIATES, INC. (GNRA) AND RZI ENVIRONMENTAL MANAGEMENT CONSULTANTS (RZI). AVAILABLE REVISIONS TO THESE DRAWINGS HAVE BEEN IDENTIFIED IN THE TABLE ABOVE BY THE CONSULTANT THAT PREPARED THE REVISED DRAWING AND A REVISION NUMBER.
2. REVISION A, A1 AND A2 IDENTIFIED ON THE TABLE ABOVE DENOTES REVISIONS MADE BY CIVIL DESIGN SOLUTIONS, INC. AS PART OF A MINOR PERMIT MODIFICATION TO REVISE THE SOUTHEASTERN BASEGRADES WITHIN THE CELL S1 AREA. THE SHEET NUMBERS ON THESE REVISED SHEETS HAVE BEEN PRECEEDED BY "(2013–059)" TO PROVIDE A UNIQUE REFERENCE FOR THE DRAWINGS.
3. REVISION B IDENTIFIED ON THE TABLE ABOVE DENOTES REVISIONS MADE BY CIVIL DESIGN SOLUTIONS, INC. AS PART OF A MINOR PERMIT MODIFICATION FOR THE USE OF A TEMPORARY GEOMEMBRANE TARP AND TO PROVIDE STORMWATER EROSION AND SEDIMENTATION CALCULATIONS. THE SHEET NUMBERS ON THESE REVISED SHEETS HAVE BEEN PRECEEDED BY "(2013–129)" TO PROVIDE A UNIQUE REFERENCE FOR THESE DRAWINGS.
4. REVISION B AND B1 IDENTIFIED ON THE TABLE ABOVE DENOTES REVISIONS MADE BY CIVIL DESIGN SOLUTIONS, INC. AS PART OF A MINOR PERMIT MODIFICATION TO PRESENT A REPLACEMENT ENHANCED GAS MANAGEMENT SYSTEM DESIGN FOR THE FACILITY. THE SHEET NUMBERS ON THESE REVISED SHEETS HAVE BEEN PRECEEDED BY "(2013–158)" TO PROVIDE A UNIQUE REFERENCE FOR DRAWINGS.
5. REVISION C IDENTIFIED ON THE TABLE ABOVE DENOTES REVISIONS MADE BY CIVIL DESIGN SOLUTIONS, INC. AS PART OF A MINOR PERMIT MODIFICATION TO PROVIDE UPGRADES TO THE LEACHATE CONVEYANCE SYSTEM. THE SHEET NUMBERS ON THESE REVISED SHEETS HAVE BEEN PRECEEDED BY "(2014–191)" TO PROVIDE A UNIQUE REFERENCE FOR THESE DRAWINGS.
6. REVISION D1 IDENTIFIED ON THE TABLE ABOVE DENOTES REVISIONS MADE BY CIVIL DESIGN SOLUTIONS, INC. AS PART OF A MINOR PERMIT MODIFICATION TO IDENTIFY A HIGH BTU GAS PROCESSING PLANT. REVISION D2 IDENTIFIES THOSE THOSE DRAWINGS REVISED AS PART OF THE RESPONSE TO PADEP TECHNICAL REVIEW COMMENTS SUBMITTED IN MAY, 2018.
7. REVISION E IDENTIFIED ON THE TABLE ABOVE DENOTES REVISIONS MADE BY CIVIL DESIGN SOLUTIONS, INC. AS PART OF A MINOR PERMIT MODIFICATION TO PROPOSE REVISIONS TO THE LEACHATE MANAGEMENT PLAN AND TO PRESENT A REVISED ACCESS ROAD. REVISIONS E1 AND E2 REPRESENTS A RESPONSE TO PADEP COMMENTS.

MINOR PERMIT MODIFICATION
SUBMITTED FEBRUARY 2020
REVISED JUNE 2020
REVISED AUGUST 2020

COMMONWEALTH OF PENNSYLVANIA
REGISTERED
MICHAEL J. DEFICATTI
ENGINEER
No. 37-[illegible]

C:\Users\Mike\Desktop\RTC-1\RTC-2\DWG\2019-108-Cover-Rev-E1.dwg, 7/31/2020 11:13:56 AM

CIVIL DESIGN SOLUTIONS, INC.
1331 State Avenue • Coraopolis, PA 15108
(412) 299-2700 • (412) 299-2922

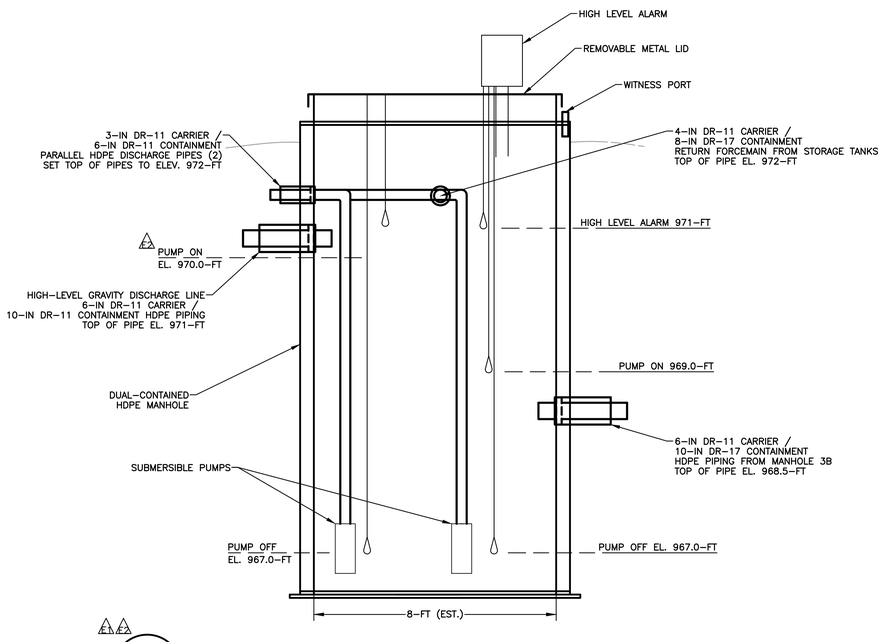

A / 45B LEACHATE MANAGEMENT PUMP STATION

NOT TO SCALE

CONTAINMENT AREA NOTES

SOME EQUIPMENT MAY REQUIRE AN ALTERNATE FOUNDATION THAN PRESENTED FOR THE CONTAINMENT AREA IN DETAIL C. PRIOR TO CONSTRUCTION, FOUNDATION DESIGNS, SPECIFICATIONS AND REQUIREMENTS FOR ALL EQUIPMENT WILL BE REVIEWED AND THE MORE CONSERVATIVE OF THE EQUIPMENT SPECIFIC FOUNDATION AND THAT SHOWN IN DETAIL A WILL BE SELECTED.

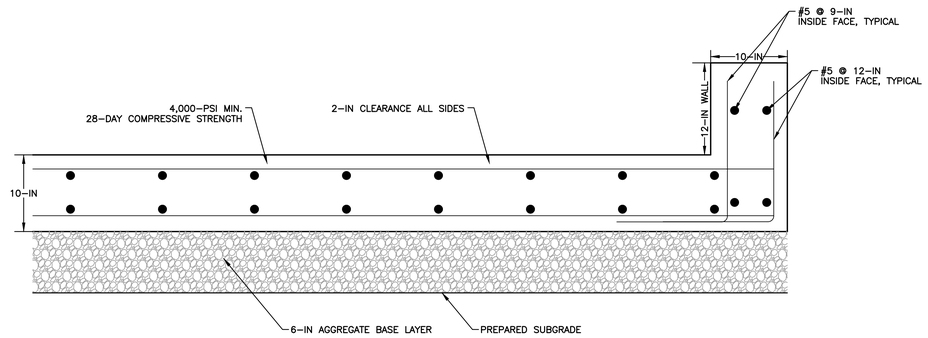

C / 45B SECONDARY CONTAINMENT (TYPICAL)

NOT TO SCALE

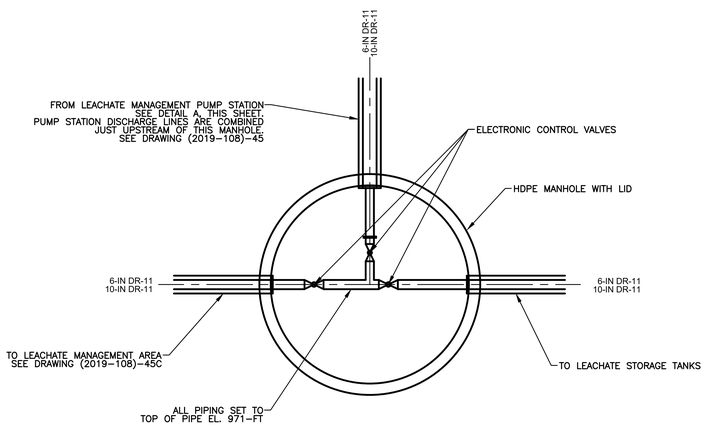

B / 45B LEACHATE MANAGEMENT PUMP STATION MANHOLE

NOT TO SCALE

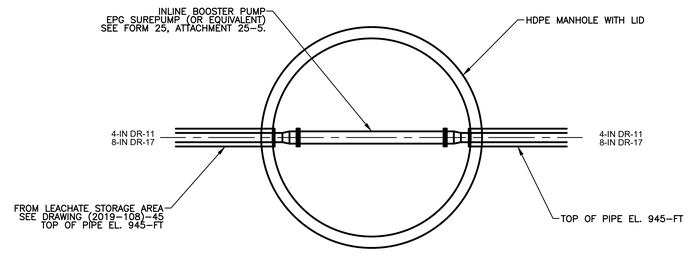

C / 45B LEACHATE STORAGE TANK INLINE PUMP MANHOLE

NOT TO SCALE

REV	DATE	DESCRIPTION	BY	CHK
E2	08/2020	REVISED PUMP ON DEPTH, DETAIL A.	MEZ	MEZ
E1	06/2020	ADDED ELEVATIONS AND INLINE PUMP DETAIL.	MEZ	MEZ
E	02/2020	NEW DRAWING FOR LEACHATE MANAGEMENT DETAILS	GDG	MEZ

DES	GDG	12/2019
CHECK	MEZ	12/2019
APPROVED	MEZ	12/2019
SCALE	AS SHOWN	
ISSUED	12/2019	
REVISION	E2	

COMMONWEALTH OF PENNSYLVANIA
REGISTERED PROFESSIONAL ENGINEER
MICHAEL E. ZEMCATTI
LICENSE NO. 075-58-0

PROJECT: WESTMORELAND WASTE, LLC
SANITARY LANDFILL
NORTH & SOUTH EXPANSION

SHEET TITLE:
LEACHATE MANAGEMENT AREA DETAILS

WESTMORELAND SANITARY LANDFILL

SHEET NO: (2019-108)-45B

DRAWING NO: L6B

C:\Users\Mike\Desktop\RTC1-RTC-2DWG\2019-108-45B-RTC-2.dwg, 7/31/2020 11:11:29 AM