Shell Chemical Appalachia LLC
300 Frankfort Road
Monaca, PA 15061

September 5, 2019

Mr. Ryan Decker
Clean Water Program
PA Department of Environmental Protection
Southwest Regional Office
400 Waterfront Drive
Pittsburgh, PA 15222

RE: NPDES Permit PA0002208 A-2 Renewal Application
Shell Chemical Appalachia LLC
Beaver County, Pennsylvania

Dear Mr. Decker:

Shell Appalachia LLC ("Shell") is submitting for renewal, this complete National Pollution Discharge Elimination System permit application per Condition 3 of the subject permit (and 40 CFR 122.41(b), 122.21(d)(2)). This permit application is being submitted at least 180 days prior to the expiration date of June 30, 2020. The application contains the following:

1. Application Discussion
2. General Information Form (GIF) (8000-PM-IT0001)
3. Application Fee of $5,000
4. Acts 14/67/68/127 Notifications and Receipts
5. PADEP NPDES Application Forms

In Section 1 (Application Discussion) we have highlighted what items have/are changing from our current permit. Many items have not changed since no operations have commenced at this point. Also, in the forms, we have used red text to highlight what was different from previous submittals.

During your review we will be available at any time for meetings, conference calls, discussions or clarifications on any submitted materials. We greatly appreciate your assistance and guidance during this permitting process.

If you have any questions or require additional information, please contact me at jim.sewell@shell.com or (218) 731-3287 or kimberly.kaal@shell.com at (724) 709-2467.

Sincerely,

H. James Sewell
Environmental Manager
Shell Chemical Appalachia LLC

Enclosures – NPDES Renewal Application

SHELL CHEMICAL APPALACHIA LLC
SHELL POLYMERS MONACA SITE
POTTER AND CENTER TOWNSHIPS
BEAVER COUNTY, PENNSYLVANIA

NATIONAL POLLUTANT DISCHARGE ELIMINATION SYSTEM (NPDES) RENEWAL APPLICATION PERMIT PA0002208 A-2

SEPTEMBER 2019

Prepared for:
Shell Chemical Appalachia LLC

Prepared by:

AECOM

TABLE OF CONTENTS

Section

Application Discussion, Descriptions and Diagrams 1

General Information Form (GIF) (8000-PM-IT0001) 2

Application Fee 3

Acts 14/67/68/127 Notifications and Receipts 4

PADEP NPDES Application Forms 5

- Special Power of Attorney for Jim Sewell
- Forms 3800-PM-BPNPSM0027b/3800-PM-BPNPSM0008b
- Module 1 – Stormwater
- Module 5 – Cooling Water Intake Structures
- Chemical Additives Notification Forms
- PENNTOXSD Summary and Results

Section 1

Application Discussion, Descriptions and Diagrams

Section 1

NPDES Renewal Application Discussion

Since Shell Chemical Appalachia LLC (Shell) applied to transfer Horsehead's permit in 2015, and the subsequent permit issuance (including amendments/clarifications), the Shell Polymers Monaca Site (SPMS) has been under construction and as of this filing none of the industrial processes that generate wastewater nor the wastewater treatment plant (WWTP) have been commissioned. Therefore, most of the information concerning processes, wastewater balances and the treatment plant have not changed from the 2015 permit application submittal. The following provides a summary of the changes which are being included in this renewal application compared to existing permit.

1. **Wastewater system balance, parameters and WWTP design.**
   No changes to the wastewater balance, parameter concentrations or treatment plant have occurred so the information provided in those Modules will not change from the permit application submitted in 2015. The wastewater balance (Attached Figure 1) has not changed and the analysis results tables for outfalls 001 (main discharge) and 101 (outlet of WWTP) have not changed from the original permit application and no industrial operations have started up as yet.

2. **Stormwater outfalls and drainage**
   Attached is an updated site drainage plan that addresses the following changes to our existing permit:
   - Outfall 016 that was authorized under a Temporary Discharge Authorization has been added to the drainage figure and the appropriate sections of the forms have been completed for this outfall to be added to the permit.
   - An outfall has been added to drain clean stormwater from the wastewater treatment plant area and will discharge clean stormwater to Poorhouse Run. In previous versions of our permit this was Outfall 010 that was utilized for construction and now is needed for this area as a permanent outfall. In the current numbering system this is now Outfall 017.
   - The two ponds that were constructed as part of the Southwest Parking Area are being incorporated into our application. We have designated a main outfall and emergency outfall for each pond. The main Outfalls are numbered 018 and 020 and the overflows 019 and 022 respectively.
   - The Bert Garcia Training Area (former PGT trucking area) is also shown on our drainage map. Shell acquired this area and has conducted no construction (earth moving activities) on this property. There are no storm water ponds associated with

this existing property and stormwater flows offsite under Route 18 onto adjacent properties and eventually to Raccoon Creek. Based on drainage patterns one new outfall has been identified from this property (023) and included with this application information.

2.2. Outfall Latitude and Longitude Corrections

- Corrected coordinates for Outfall 013

2.3. Outfall 015

Shell is requesting to remove the limits for Outfall 015, which is a seep due to the water volume is low, the flow is minimal to non-existent which creates issues with obtaining representative samples, in particular Total Suspended Solids. The water flow from the seep is so low that it is difficult to collect a sample without contaminating it with sediment, therefore potentially leading to a non-compliance issue that is not representative of the water quality.

The following is a summary of the analytical data obtained to date:

Parameter	Average Concentration (mg/L)	Maximum Concentration (mg/L)	Number of samples
Oil and Grease	3.83	5.20	16
TSS	29.75	180.00	30
Total Antimony	0.01	0.01	25
Total Arsenic	0.01	0.05	25
Total Boron	4.20	6.80	25
Total Cadmium	0.003	0.02	25
Total Iron	2.24	15.00	25
Total Lead	0.01	0.04	25
Total Manganese	0.88	1.60	25
Total Mercury	0.00002	0.00002	25
Total Nickel	0.01	0.03	25
Total Selenium	0.01	0.01	25
pH (S.U.)	Min: 6.63	Max: 8.73	33

During PADEP review if needed we would accommodate a field review of this outfall to help PADEP facilitate a better understanding of the issue.

3. Operating Data

3.1. Production Data estimates have not changed as no design changes have been implemented.

3.2. Based on current vendor recommendations, we have included new Chemical Additives mainly for Cooling Tower operations. We have completed the Chemical Additive section of the form and included the Chemical Additives Notification Forms for those additives that were not previously submitted.

4. Sampling Results

For outfalls 001, 101 and 201 we have utilized the data from original application since no processes are operational.

Since no processes are operational all data collected to date are representative of stormwater for construction. The existing DMR data are summarized in the tables. Oil and Grease and BOD5 were only analytes not in one of outfall measurement requirements.

For the stormwater data, we have grouped the analysis utilizing the following logic:

- Data from Outfalls 002, 004, 006, 008, 010 and 013 have all been grouped together. These data are also considered representative of Outfalls 018 and 020 since they are all main outfalls from stormwater ponds and the only activities at site are construction and vehicle traffic.
- Sample data was obtained from emergency overflow Outfalls 003 and 014 have been combined. This data is considered representative of all the other emergency overflow outfalls.
- Data from Outfalls 016 and 021 are presented separate since Outfall 016 is influenced by runoff from Highway 376. Data from Outfall 021 are considered representative of the former PGT trucking outfalls.

5. Cooling Water Intake Structure

Module 5 is included with the same information as the original submittal since there have been no design changes. The "Source Water Physical and Biological Baseline Characterization Study" has not been included as this study has not changed.

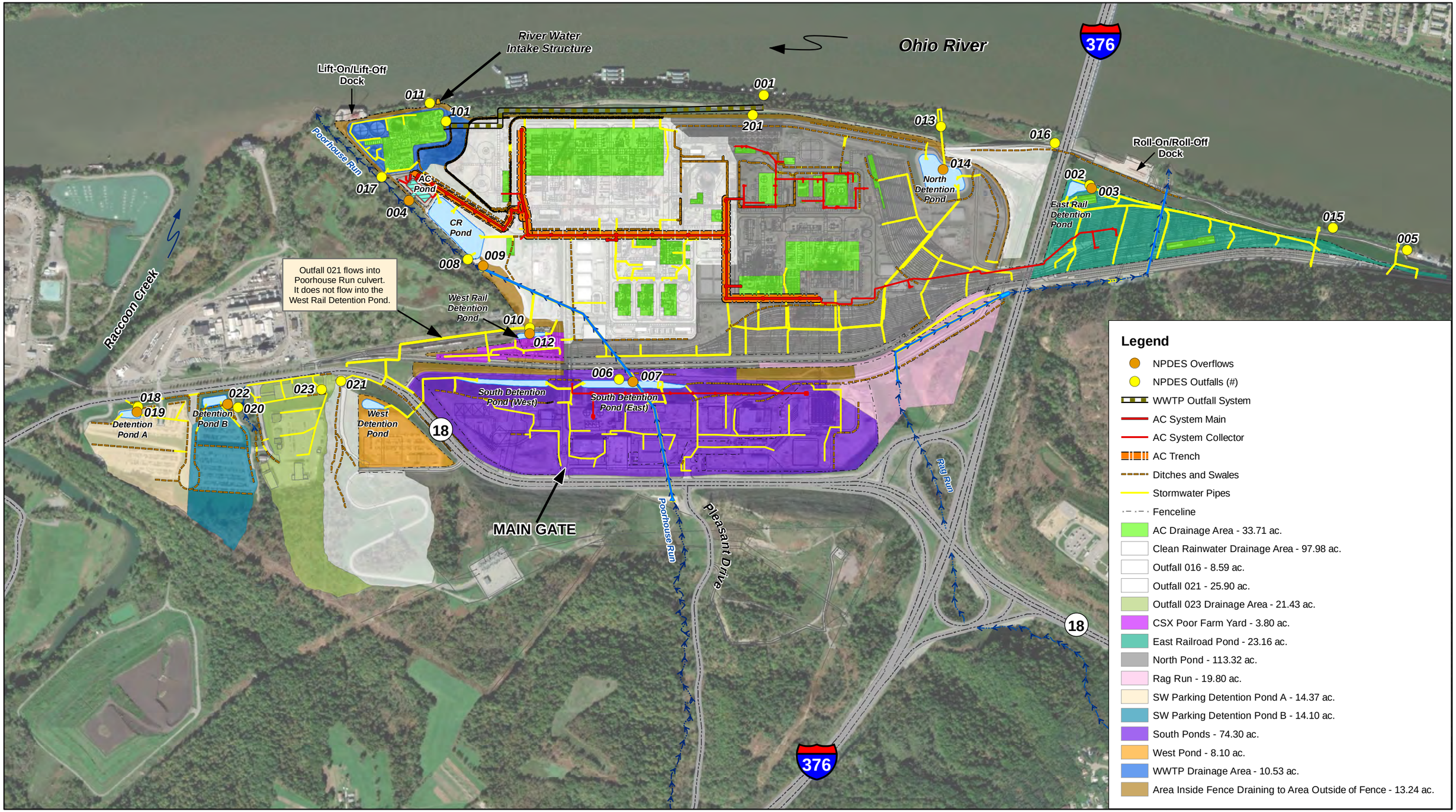

Environmental Resources Management, Inc.

September 2019

Scale in Feet
1 inch = 800 feet

800 400 0 800 Feet

Date:	September 9, 2019
Version:	1.0
Prepared by:	Brian Sterner (ERM)
Checked by:	
Approved by:	

Site Drainage

Shell Polymers Monaca, PA

P:\Projects\0369413 Shell-Franklin On-Site NPDES Support.BS\GIS\MXD\Drainage_Plan\2019-06-26_NPDES_Permit\Site_Drainage_Areas_Shell_Chemicals_2019-09-11.mxd - 9/11/2019| BAS

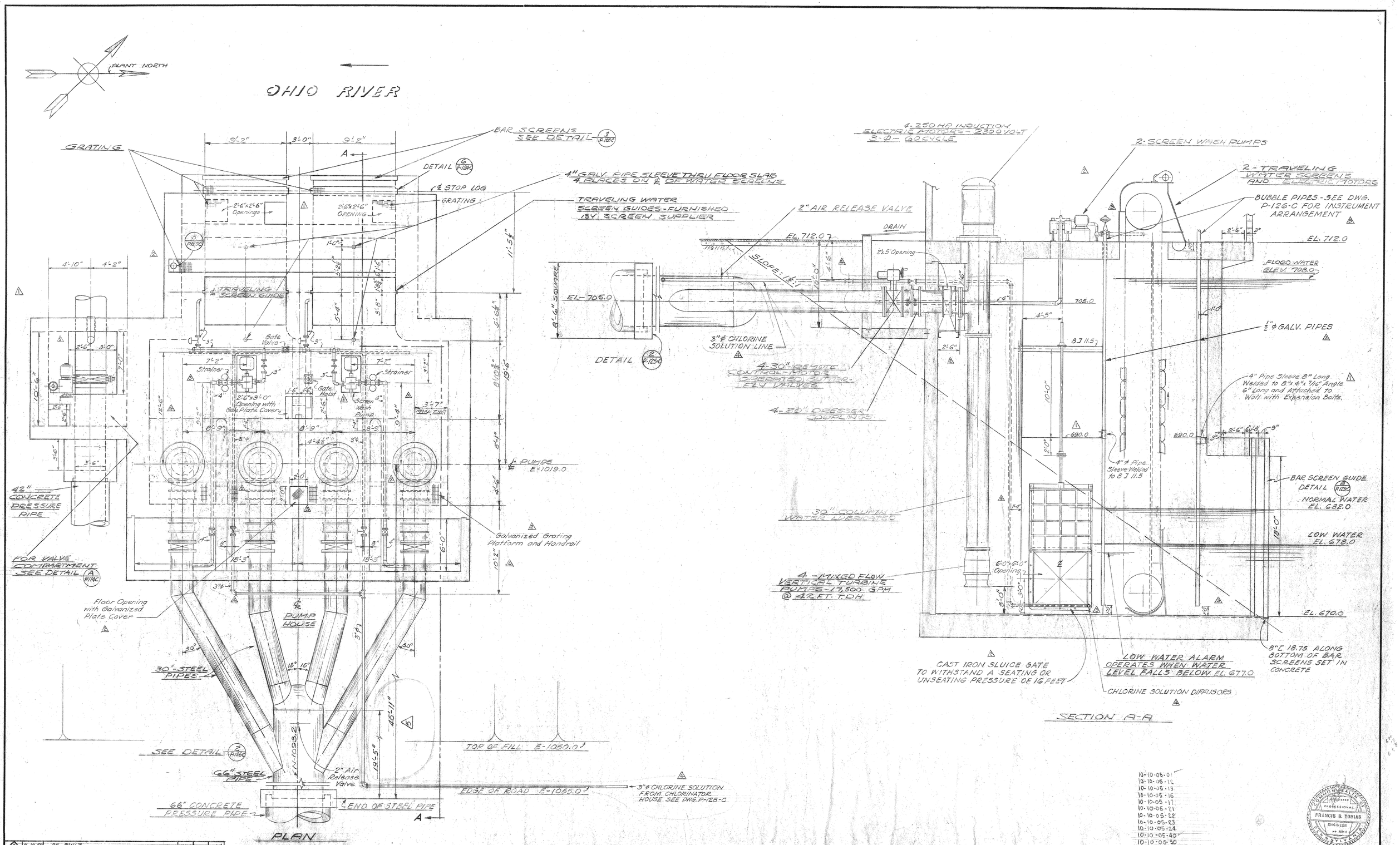

10-10-05-01
10-10-05-12
10-10-05-13
10-10-05-16
10-10-05-17
10-10-05-21
10-10-05-22
10-10-05-23
10-10-05-24
10-10-05-40
10-10-05-50
10-10-05-60

NO.	DATE	REVISION	BY	APP.	APP.
5	9-10-58	AS BUILT	NCJ		W.A.P.
4	10-28-57	Added Chlorine Solution Line	KJN		
3	9-3-57	Replaced Differential Water Level Control & Spray Water Piping - Relocated Floor Opening to Pump Compartment	KJN		
2	6-27-57	Added Working Platform at Pump Compartment & other changes published	KJN		
		Added Compartment Wall and Sluice Gate			
		Relocated Floor Opening Within Pump House			
		Added Dresser Couplers to 30" Pump Discharges			
		Reduced Opening for Traveling Water Screens			
		Relocated Sluice Gate Hoist Bracket & Pipe			
1	5-2-57	Revised 42" Valve Compartment & Transition Section	KJN		
		Relocated Floor Opening			
		Revised Circulating Water Pump Compartment Dimensions & Stop Log Slots			

REFERENCE DRAWINGS	NUMBER
RIVER PUMP STATION DETAILS	P-125-C
Condenser Cooling Water Piping-No. 18 Profile	P-118-C
Condenser Cooling Water Piping - Details	P-118-C
CONSTRUCTION STOS	CS-101
River Pump Station - Piping Details	P-126-C

NOTES

1. Operating floor overhung 2' at the sides of Pump Station as shown on this drawing; see Architectural and Structural drawings for further information.
2. PROVISION WILL BE MADE FOR 1" STATION AIR SERVICE AND 2" PLANT WATER FOR PUMP SEALS AND SERVICE

DESCRIPTION	COST ACCOUNT
PUMPHOUSE STRUCTURE	32.01000
PUMPING EQUIP.	32.11000
CONDENSER COOLING WATER	32.12000
Rev. #4 7/30/57	
Rev. #1 5/15/57; Rev. #2 2/6/57; Rev. #3 2/14/57	

WORK COVERED BY THIS DRAWING CHARGED TO COST ACCOUNT ABOVE

APPROVED FOR CONSTRUCTION
W.A.P. 8-28-57
CONSTRUCTION APPROVAL

APPROVAL		DATE
PROJECT ENGINEER	W. A. Ball	8/28/57
CHIEF ENGINEER		

THIS DRAWING IS THE PROPERTY OF KAISER ENGINEERS - DIVISION OF HENRY J. KAISER COMPANY AND IS NOT TO BE COPIED OR USED WITHOUT ITS WRITTEN PERMISSION

DIVISION OF HENRY J. KAISER COMPANY **KAISER ENGINEERS** OAKLAND CALIFORNIA

		DATE
SCALE	1/4" = 1 FOOT	
DRAWN BY	R. COCHRANE	2-26-57
CHECKED BY	K.J.N.	3-7-57
APPROVED BY		3-28-57
CHIEF DESIGN ENGINEER		3-27-57

FOR ST. JOSEPH LEAD COMPANY
LOCATION JOSEPHTOWN, MONACA, PA.

GEORGE F. WEATON STATION
RIVER PUMP STATION ARRANGEMENT

JOB № 5603 DWG. № P-124-C REVISION R-5

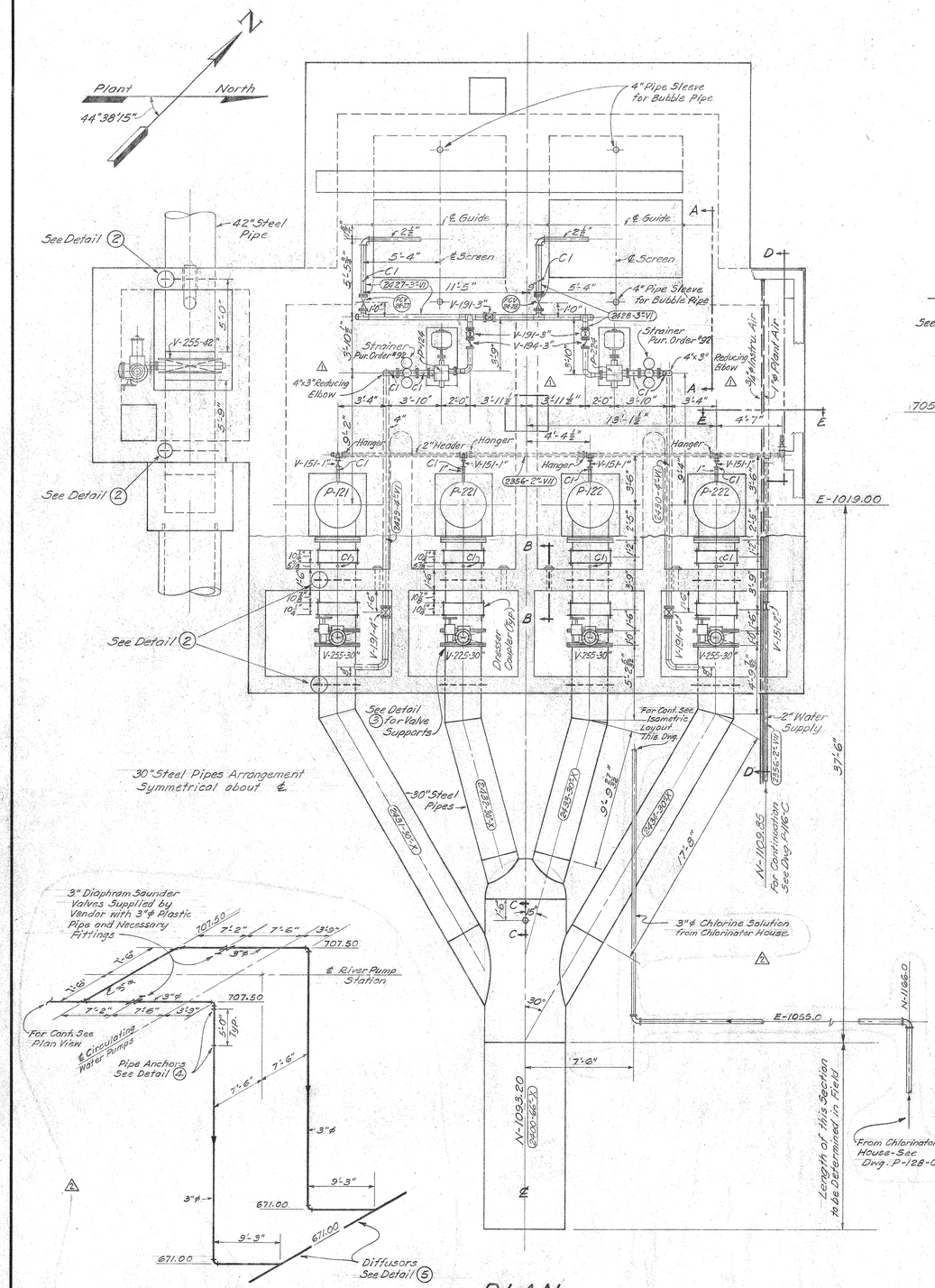

ISOMETRIC LAYOUT OF CHLORINE SOLUTION PIPING IN PUMP STATION
Scale: 1/8"=1'

PLAN
Scale: 1/4"=1'

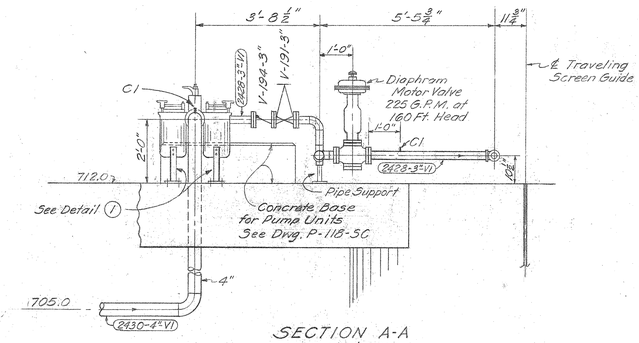

SECTION A-A
Scale: 1/2"=1'

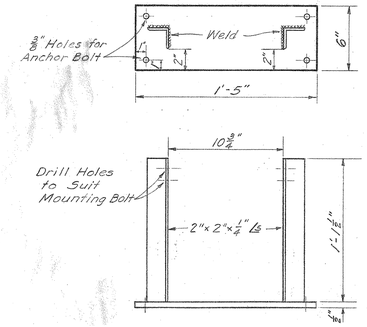

DETAIL 1
Basket Strainer Support
Scale: 2"=1'

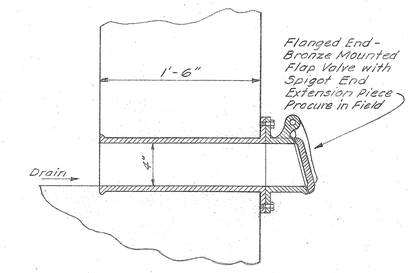

SECTION B-B
No Scale

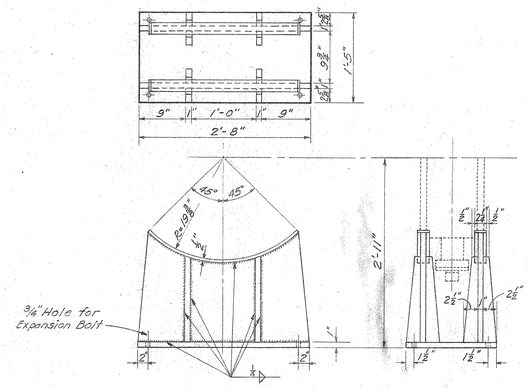

DETAIL 3
STEEL SUPPORT FOR 30" BUTTERFLY VALVES
Scale: 1"=1'

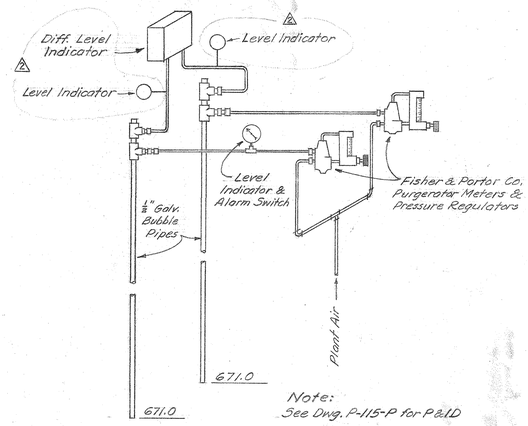

BUBBLE PIPE ARRANGEMENT
Not to Scale

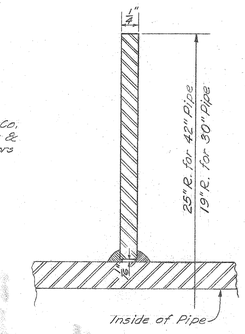

DETAIL 2
Water Stop
Not to Scale

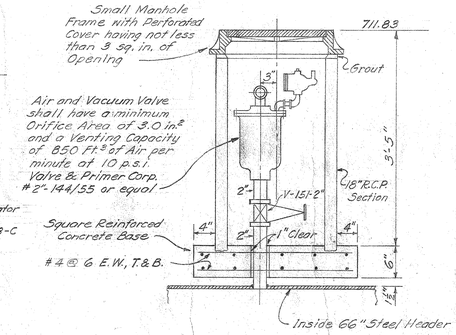

SECTION C-C
2" Combination Air & Vacuum and Air Release Valves
Scale: 1"=1'

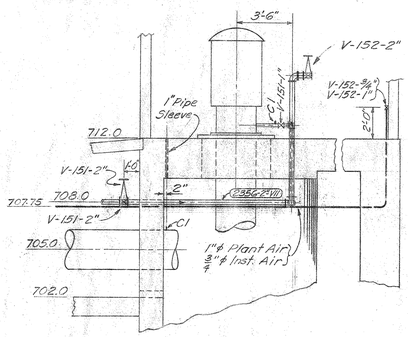

SECTION D-D
Scale: 1/4"=1'

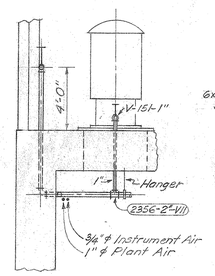

SECTION E-E
Scale: 1/4"=1'

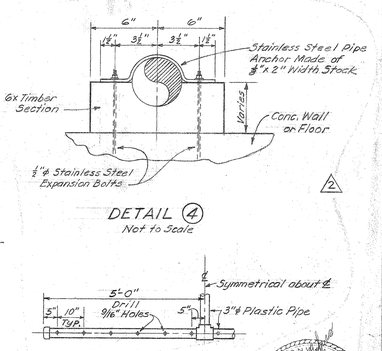

DETAIL 4
Not to Scale

DETAIL 5
Scale: 1/2"=1'

NO.	DATE	REVISION	BY	APP.	APP.
2	11-6-57	Added Chlorine Solution Piping & Details. Added Level Indicators in Bubble Pipe Arrangement	KJN	WMA	
1	9-3-57	Revised Screen Spray Water Piping	KJN		

REFERENCE DRAWINGS	NUMBER
River Pump Station - Arrangement	P-124-C
River Pump Station - Details	P-125-C
Condenser Cooling Water Piping - Details	P-114-C
River Pump Station - Foundation & Floor Slabs	P-118-SC
River Pump Station - Sections & Details	P-119-SC
Condenser Cooling Water Piping - Plan & Profile	P-113-C

NOTES

1. For 30" Circulating Water Pump Discharge: Cut all flanges from 1 1/2" plate; finished to minimum 1 1/4" thickness. All flanges have 125# standard drilling and facing. All bolt holes to straddle center lines.
2. All steel pipes exposed under floor slab are to be coated and wrapped.

RIVER PUMPS & STRUCTURES 320.00.00
Rev. #1, 9/1/57; Rev. #2, 11/4/57
DESCRIPTION | COST ACCOUNT
WORK COVERED BY THIS DRAWING CHARGED TO COST ACCOUNT ABOVE

APPROVED FOR CONSTRUCTION
W. A. A. 8-20-57
CONSTRUCTION APPROVAL

APPROVAL		DATE
PROJECT ENGINEER	W. A. Ball	8/20/57
CHIEF ENGINEER		

THIS DRAWING IS THE PROPERTY OF KAISER ENGINEERS - DIVISION OF HENRY J. KAISER COMPANY AND IS NOT TO BE COPIED OR USED WITHOUT ITS WRITTEN PERMISSION.

DIVISION OF HENRY J. KAISER COMPANY
KAISER ENGINEERS OAKLAND CALIFORNIA

		DATE
SCALE	As Shown	
DRAWN BY	K.J.N.	8-14-57
CHECKED BY		8-15-57
APPROVED BY		8-19-57
CHIEF DESIGN ENGINEER		8-19-57

FOR ST. JOSEPH LEAD COMPANY
LOCATION JOSEPHTOWN, MONACA, PA.

GEORGE F. WEATON STATION
RIVER PUMP STATION
PIPING DETAILS

JOB № 5603 DWG. № P-126-C REVISION R-2

COMMONWEALTH OF PENNSYLVANIA REGISTERED PROFESSIONAL ENGINEER FRANCIS B. TOSIAS NO. 30246

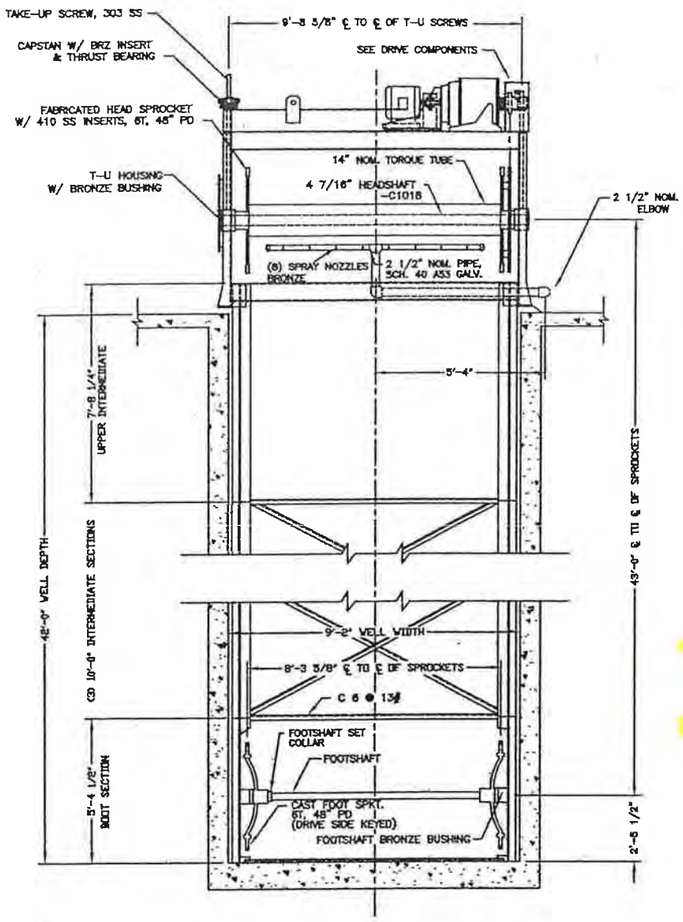

FRONT VIEW

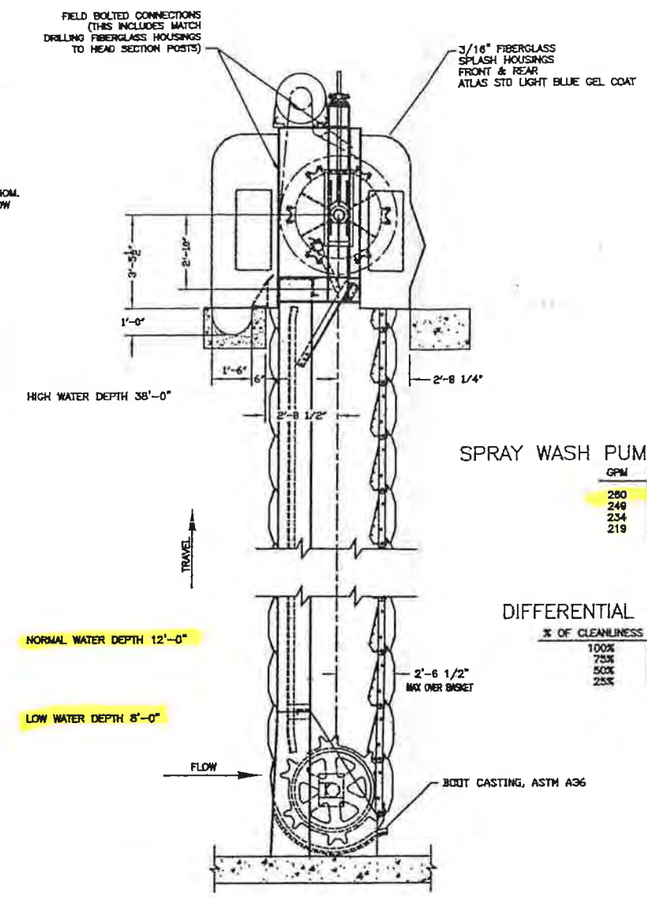

RIGHT SIDE VIEW

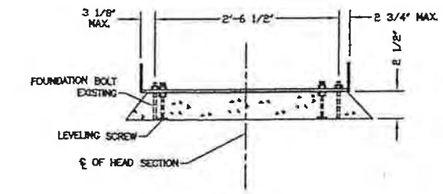

FOUNDATION DETAIL

SPRAY WASH PUMP REQUIREMENTS:

GPM	PSI
280	100
249	90
234	80
219	70

DIFFERENTIAL WATER LEVEL

% OF CLEANLINESS	HEADLOSS IN FT.
100%	.11
75%	.23
50%	.57
25%	2.42

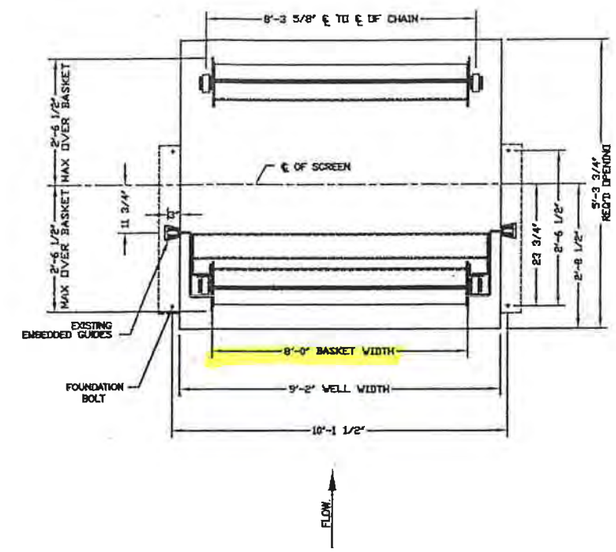

HORSEHEAD CORPORATION
MONACA, PA

DRIVE COMPONENTS:

MOTOR	3 HP 1750 RPM 3-PH, 230/460V, 60 HZ
REDUCER	CLASS II 6 RPM OUTPUT
DRIVE CHAIN	1.75" PITCH RC140
DRIVE SPROCKET W/SHEAR PIN DEVICE	12T
DRIVEN SPROCKET	86T

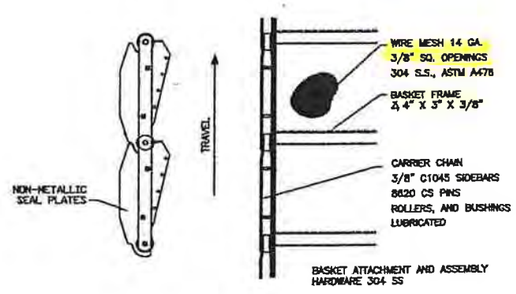

BASKET DETAIL

NOTES:

1. COATING: ALL CASTINGS AND FABRICATED STEEL PARTS SHALL BE SANDBLASTED AND COATED WITH 16 MILS OF COAL TAR EPOXY. DRIVE CHAIN SHALL RECEIVE ONE COAT OF SLUSH OIL. ANY STAINLESS STEEL, NON-FERROUS OR GALVANIZED MATERIAL SHALL REMAIN UNPAINTED.
2. ALL FRAME HARDWARE TO BE 18-8 SS.
3. SCREEN WILL PASS APPROXIMATELY 34000 GPM AT A NORMAL WATER DEPTH OF 8 FT. THRU A 100% CLEAN SCREEN AT A VELOCITY OF 2.15 FPS.
4. THE ENTIRE FRAMEWORK SHALL BE CONSTRUCTED OF ASTM A36 STEEL. EACH SECTION TO BE OF WELDED AND BOLTED CONSTRUCTION.
5. DRIVE SYSTEM IS DESIGNED TO START SCREEN UNDER A MAX. OF 5 FT. HEADLOSS.

ATLAS MANUFACTURING CO.

GENERAL ARRANGEMENT

8' X 43' 2-POST

TRAVELING WATER SCREEN

REV.	DATE	DESCRIPTION	DRAWN BY	DATE 1-30-07	DRAWING NO.	REV.
			APPROVED BY	SCALE NONE	SP07-240	

Section 2

General Information Form (GIF)

0210-PM-PIO0001 4/2018
Form

pennsylvania
DEPARTMENT OF ENVIRONMENTAL PROTECTION

COMMONWEALTH OF PENNSYLVANIA
DEPARTMENT OF ENVIRONMENTAL PROTECTION

GENERAL INFORMATION FORM – AUTHORIZATION APPLICATION

Before completing this General Information Form (GIF), read the step-by-step instructions provided in this application package. This version of the General Information Form (GIF) must be completed and returned with any program-specific application being submitted to the Department.

Related IDs (If Known)		DEP USE ONLY
Client ID# 311950	**APS ID#**	Date Received & General Notes
Site ID# 102360	**Auth ID#**	
Facility ID#		

CLIENT INFORMATION

DEP Client ID# 311950	**Client Type / Code** LLC			
Organization Name or Registered Fictitious Name Shell Chemical Appalachia LLC		**Employer ID#** (EIN) 46-1624986	**Dun & Bradstreet ID#**	
Individual Last Name	**First Name**	**MI**	**Suffix**	**SSN**
Additional Individual Last Name	**First Name**	**MI**	**Suffix**	**SSN**
Mailing Address Line 1 4301 Dutch Ridge Road		**Mailing Address Line 2**		
Address Last Line – City Beaver	**State** PA	**ZIP+4** 15009	**Country** USA	
Client Contact Last Name Sewell	**First Name** H	**MI** James	**Suffix**	
Client Contact Title Environmental Manager (Attorney-in-Fact)		**Phone** 724.709.2411	**Ext**	
Email Address Jim.Sewell@shell.com		**FAX**		

SITE INFORMATION

DEP Site ID# 102360	**Site Name** Shell Polymers Monaca Site				
EPA ID#	**Estimated Number of Employees to be Present at Site**				
Description of Site Petrochemical Complex					
County Name Beaver	**Municipality** Potter	**City** ☐	**Boro** ☐	**Twp** ☒	**State**
Site Location Line 1 300 Frankfort Road		**Site Location Line 2**			
Site Location Last Line – City Monaca		**State** PA	**ZIP+4** 15061		
Detailed Written Directions to Site From Pittsburgh International Airport – 376 North to Exit 39 (Monaca), turn left onto Rt 18 South and proceed for 1.5 miles, then turn right at light into plant.					
Site Contact Last Name Sewell	**First Name** H	**MI** James	**Suffix**		
Site Contact Title Environmental Manager (Attorney-in-Fact)		**Site Contact Firm** Shell Chemical Appalachia LLC			
Mailing Address Line 1 300 Frankfort Road		**Mailing Address Line 2**			
Mailing Address Last Line – City Monaca		**State** **PA**	**ZIP+4** **15601**		

Phone	Ext	FAX	Email Address
724.709.2411			Jim.Sewell@shell.com

NAICS Codes (Two- & Three-Digit Codes – List All That Apply) **6-Digit Code** (Optional)
32 and 22

Client to Site Relationship
OWN

FACILITY INFORMATION

Modification of Existing Facility

		Yes	No
1.	**Will this project modify an existing facility, system, or activity?**	☒	☐
2.	**Will this project involve an addition to an existing facility, system, or activity?**	☒	☐

If "Yes", check all relevant facility types and provide DEP facility identification numbers below.

	Facility Type	DEP Fac ID#		Facility Type	DEP Fac ID#
☐	Air Emission Plant		☐	Industrial Minerals Mining Operation	
☐	Beneficial Use (water)		☐	Laboratory Location	
☐	Blasting Operation		☐	Land Recycling Cleanup Location	
☐	Captive Hazardous Waste Operation		☐	Mine DrainageTrmt/LandRecyProjLocation	
☐	Coal Ash Beneficial Use Operation		☐	Municipal Waste Operation	
☐	Coal Mining Operation		☐	Oil & Gas Encroachment Location	
☐	Coal Pillar Location		☐	Oil & Gas Location	
☐	Commercial Hazardous Waste Operation		☐	Oil & Gas Water Poll Control Facility	
☐	Dam Location		☐	Oil & Gas Wastewater Storage Impoundment	
☐	Deep Mine Safety Operation -Anthracite		☐	Public Water Supply System	
☐	Deep Mine Safety Operation -Bituminous		☐	Radiation Facility	
☐	Deep Mine Safety Operation -Ind Minerals		☐	Residual Waste Operation	
☐	Encroachment Location (water, wetland)		☐	Storage Tank Location	
☐	Erosion & Sediment Control Facility		☒	Water Pollution Control Facility	0417201
☐	Explosive Storage Location		☐	Water Resource	
			☐	Other:	

Latitude/Longitude Point of Origin	Latitude			Longitude		
	Degrees	Minutes	Seconds	Degrees	Minutes	Seconds
HGIS – Estimated center of project	40	40	17	80	20	10

Horizontal Accuracy Measure Feet 18 --or-- Meters

Horizontal Reference Datum Code
☐ North American Datum of 1927
☐ North American Datum of 1983
☒ World Geodetic System of 1984

Horizontal Collection Method Code eMapPA

Reference Point Code CNTAR

Altitude Feet --or-- Meters

Altitude Datum Name
☐ The National Geodetic Vertical Datum of 1929
☒ The North American Vertical Datum of 1988 (NAVD88)

Altitude (Vertical) Location Datum Collection Method Code SRVEY

Geometric Type Code POINT

Data Collection Date

Source Map Scale Number Inch(es) = Feet
--or-- Centimeter(s) = Meters

PROJECT INFORMATION

Project Name
NPDES permit renewal application

Project Description
Renewal application for Water Quality NPDES Permit PA-0002208 A-2

Project Consultant Last Name **First Name** **MI** **Suffix**

Project Consultant Title **Consulting Firm**

Mailing Address Line 1 **Mailing Address Line 2**

Address Last Line – City			State	ZIP+4
Phone	**Ext**	**FAX**	**Email Address**	

Time Schedules	Project Milestone (Optional)

1.	**Have you informed the surrounding community and addressed any concerns prior to submitting the application to the Department?**	☒ Yes	☐ No
2.	**Is your project funded by state or federal grants?**	☐ Yes	☒ No

Note: If "Yes", specify what aspect of the project is related to the grant and provide the grant source, contact person and grant expiration date.
Aspect of Project Related to Grant
Grant Source: _____
Grant Contact Person: _____
Grant Expiration Date: _____

3.	**Is this application for an authorization on Appendix A of the Land Use Policy? (For referenced list, see Appendix A of the Land Use Policy attached to GIF instructions)**	☒ Yes	☐ No

Note: If "No" to Question 3, the application is not subject to the Land Use Policy.
If "Yes" to Question 3, the application is subject to this policy and the Applicant should answer the additional questions in the **Land Use Information** section.

LAND USE INFORMATION

Note: Applicants are encouraged to submit copies of local land use approvals or other evidence of compliance with local comprehensive plans and zoning ordinances.

1.	**Is there an adopted county or multi-county comprehensive plan?**	☒ Yes	☐ No
2.	**Is there an adopted municipal or multi-municipal comprehensive plan?**	☒ Yes	☐ No
3.	**Is there an adopted county-wide zoning ordinance, municipal zoning ordinance or joint municipal zoning ordinance?**	☒ Yes	☐ No

Note: If the Applicant answers "No" to either Questions 1, 2 or 3, the provisions of the PA MPC are not applicable and the Applicant does not need to respond to questions 4 and 5 below.
If the Applicant answers "Yes" to questions 1, 2 and 3, the Applicant should respond to questions 4 and 5 below.

4.	**Does the proposed project meet the provisions of the zoning ordinance or does the proposed project have zoning approval?** If zoning approval has been received, attach documentation.	☒ Yes	☐ No
5.	**Have you attached Municipal and County Land Use Letters for the project?**	☒ Yes	☐ No

COORDINATION INFORMATION

Note: The PA Historical and Museum Commission must be notified of proposed projects in accordance with DEP Technical Guidance Document 012-0700-001 and the accompanying Cultural Resource Notice Form.

If the activity will be a mining project (i.e., mining of coal or industrial minerals, coal refuse disposal and/or the operation of a coal or industrial minerals preparation/processing facility), respond to questions 1.0 through 2.5 below.

If the activity will not be a mining project, skip questions 1.0 through 2.5 and begin with question 3.0.

1.0	**Is this a coal mining project?** If "Yes", respond to 1.1-1.6. If "No", skip to Question 2.0.	☐	Yes	☒	No
1.1	**Will this coal mining project involve coal preparation/ processing activities in which the total amount of coal prepared/processed will be equal to or greater than 200 tons/day?**	☐	Yes	☐	No
1.2	**Will this coal mining project involve coal preparation/ processing activities in which the total amount of coal prepared/processed will be greater than 50,000 tons/year?**	☐	Yes	☐	No
1.3	**Will this coal mining project involve coal preparation/ processing activities in which thermal coal dryers or pneumatic coal cleaners will be used?**	☐	Yes	☐	No
1.4	**For this coal mining project, will sewage treatment facilities be constructed and treated waste water discharged to surface waters?**	☐	Yes	☐	No
1.5	**Will this coal mining project involve the construction of a permanent impoundment meeting one or more of the following criteria: (1) a contributory drainage area exceeding 100 acres; (2) a depth of water measured by the upstream toe of the dam at maximum storage elevation exceeding 15 feet; (3) an impounding capacity at maximum storage elevation exceeding 50 acre-feet?**	☐	Yes	☐	No
1.6	**Will this coal mining project involve underground coal mining to be conducted within 500 feet of an oil or gas well?**	☐	Yes	☐	No
2.0	**Is this a non-coal (industrial minerals) mining project?** If "Yes", respond to 2.1-2.6. If "No", skip to Question 3.0.	☐	Yes	☒	No
2.1	**Will this non-coal (industrial minerals) mining project involve the crushing and screening of non-coal minerals other than sand and gravel?**	☐	Yes	☐	No
2.2	**Will this non-coal (industrial minerals) mining project involve the crushing and/or screening of sand and gravel with the exception of wet sand and gravel operations (screening only) and dry sand and gravel operations with a capacity of less than 150 tons/hour of unconsolidated materials?**	☐	Yes	☐	No
2.3	**Will this non-coal (industrial minerals) mining project involve the construction, operation and/or modification of a portable non-metallic (i.e., non-coal) minerals processing plant under the authority of the General Permit for Portable Non-metallic Mineral Processing Plants (i.e., BAQ-PGPA/GP-3)?**	☐	Yes	☐	No
2.4	**For this non-coal (industrial minerals) mining project, will sewage treatment facilities be constructed and treated waste water discharged to surface waters?**	☐	Yes	☐	No
2.5	**Will this non-coal (industrial minerals) mining project involve the construction of a permanent impoundment meeting one or more of the following criteria: (1) a contributory drainage area exceeding 100 acres; (2) a depth of water measured by the upstream toe of the dam at maximum storage elevation exceeding 15 feet; (3) an impounding capacity at maximum storage elevation exceeding 50 acre-feet?**	☐	Yes	☐	No

3.0	**Will your project, activity, or authorization have anything to do with a well related to oil or gas production, have construction within 200 feet of, affect an oil or gas well, involve the waste from such a well, or string power lines above an oil or gas well?** If "Yes", respond to 3.1-3.3. If "No", skip to Question 4.0.	☐	Yes	☒	No
3.1	**Does the oil- or gas-related project involve any of the following: placement of fill, excavation within or placement of a structure, located in, along, across or projecting into a watercourse, floodway or body of water (including wetlands)?**	☐	Yes	☐	No
3.2	**Will the oil- or gas-related project involve discharge of industrial wastewater or stormwater to a dry swale, surface water, ground water or an existing sanitary sewer system or storm water system?** If "Yes", discuss in *Project Description*.	☐	Yes	☐	No
3.3	**Will the oil- or gas-related project involve the construction and operation of industrial waste treatment facilities?**	☐	Yes	☐	No
4.0	**Will the project involve a construction activity that results in earth disturbance?** If "Yes", specify the total disturbed acreage. **4.0.1 Total Disturbed Acreage** Renewal application - no new construction	☐	Yes	☒	No
5.0	**Does the project involve any of the following?** If "Yes", respond to 5.1-5.3. If "No", skip to Question 6.0.	☐	Yes	☒	No
5.1	**Water Obstruction and Encroachment Projects – Does the project involve any of the following: placement of fill, excavation within or placement of a structure, located in, along, across or projecting into a watercourse, floodway or body of water?**	☐	Yes	☐	No
5.2	**Wetland Impacts – Does the project involve any of the following: placement of fill, excavation within or placement of a structure, located in, along, across or projecting into a wetland?**	☐	Yes	☐	No
5.3	**Floodplain Projects by the commonwealth, a Political Subdivision of the commonwealth or a Public Utility – Does the project involve any of the following: placement of fill, excavation within or placement of a structure, located in, along, across or projecting into a floodplain?**	☐	Yes	☐	No
6.0	**Will the project involve discharge of stormwater or wastewater from an industrial activity to a dry swale, surface water, ground water or an existing sanitary sewer system or separate storm water system?**	☒	Yes	☐	No
7.0	**Will the project involve the construction and operation of industrial waste treatment facilities?**	☐	Yes	☐	No
8.0	**Will the project involve construction of sewage treatment facilities, sanitary sewers, or sewage pumping stations?** If "Yes", indicate estimated proposed flow (gal/day). Also, discuss the sanitary sewer pipe sizes and the number of pumping stations/treatment facilities/name of downstream sewage facilities in the *Project Description*, where applicable. **8.0.1 Estimated Proposed Flow (gal/day)**	☐	Yes	☒	No
9.0	**Will the project involve the subdivision of land, or the generation of 800 gpd or more of sewage on an existing parcel of land or the generation of an additional 400 gpd of sewage on an already-developed parcel, or the generation of 800 gpd or more of industrial wastewater that would be discharged to an existing sanitary sewer system?**	☐	Yes	☒	No
	9.0.1 Was Act 537 sewage facilities planning submitted and approved by DEP? If "Yes" attach the approval letter. Approval required prior to 105/NPDES approval.	☐	Yes	☐	No
10.0	**Is this project for the beneficial use of biosolids for land application within Pennsylvania?** If "Yes" indicate how much (i.e. gallons or dry tons per year). **10.0.1 Gallons Per Year (residential septage)** _____ **10.0.2 Dry Tons Per Year (biosolids)**	☐	Yes	☒	No

11.0	**Does the project involve construction, modification or removal of a dam?** If "Yes", identify the dam. **11.0.1 Dam Name**	☐	Yes	☒	No
12.0	**Will the project interfere with the flow from, or otherwise impact, a dam?** If "Yes", identify the dam. **12.0.1 Dam Name**	☐	Yes	☒	No
13.0	**Will the project involve operations (excluding during the construction period) that produce air emissions (i.e., NOX, VOC, etc.)?** If "Yes", identify each type of emission followed by the amount of that emission. **13.0.1 Enter all types & amounts of emissions; separate each set with semicolons.**	☐	Yes	☒	No
14.0	**Does the project include the construction or modification of a drinking water supply to serve 15 or more connections or 25 or more people, at least 60 days out of the year?** If "Yes", check all proposed sub-facilities.	☐	Yes	☒	No
	14.0.1 Number of Persons Served _____				
	14.0.2 Number of Employee/Guests _____				
	14.0.3 Number of Connections _____				
	14.0.4 Sub-Fac: Distribution System	☐	Yes	☐	No
	14.0.5 Sub-Fac: Water Treatment Plant	☐	Yes	☐	No
	14.0.6 Sub-Fac: Source	☐	Yes	☐	No
	14.0.7 Sub-Fac: Pump Station	☐	Yes	☐	No
	14.0.8 Sub Fac: Transmission Main	☐	Yes	☐	No
	14.0.9 Sub-Fac: Storage Facility	☐	Yes	☐	No
15.0	**Will your project include infiltration of storm water or waste water to ground water within one-half mile of a public water supply well, spring or infiltration gallery?**	☐	Yes	☒	No
16.0	**Is your project to be served by an existing public water supply?** If "Yes", indicate name of supplier and attach letter from supplier stating that it will serve the project. **16.0.1 Supplier's Name** _____	☐	Yes	☒	No
	16.0.2 Letter of Approval from Supplier is Attached	☐	Yes	☐	No
17.0	**Will this project involve a new or increased drinking water withdrawal from a stream or other water body?** If "Yes", should reference both Water Supply and Watershed Management. **17.0.1 Stream Name**	☐	Yes	☒	No
18.0	**Will the construction or operation of this project involve treatment, storage, reuse, or disposal of waste?** If "Yes", indicate what type (i.e., hazardous, municipal (including infectious & chemotherapeutic), residual) and the amount to be treated, stored, re-used or disposed. **18.0.1 Type & Amount**	☐	Yes	☒	No
19.0	**Will your project involve the removal of coal, minerals, etc. as part of any earth disturbance activities?**	☐	Yes	☒	No
20.0	**Does your project involve installation of a field constructed underground storage tank?** If "Yes", list each Substance & its Capacity. **Note:** Applicant may need a Storage Tank Site Specific Installation Permit. **20.0.1 Enter all substances & capacity of each; separate each set with semicolons.**	☐	Yes	☒	No
21.0	**Does your project involve installation of an aboveground storage tank greater than 21,000 gallons capacity at an existing facility?** If "Yes", list each Substance & its Capacity. **Note:** Applicant may need a Storage Tank Site Specific Installation Permit. **21.0.1 Enter all substances & capacity of each; separate each set with semicolons.**	☐	Yes	☒	No

22.0	**Does your project involve installation of a tank greater than 1,100 gallons which will contain a highly hazardous substance as defined in DEP's Regulated Substances List, 2570-BK-DEP2724?** If "Yes", list each Substance & its Capacity. **Note:** Applicant may need a Storage Tank Site Specific Installation Permit. **22.0.1 Enter all substances & capacity of each; separate each set with semicolons.**	☐	Yes	☒	No
23.0	**Does your project involve installation of a storage tank at a new facility with a total AST capacity greater than 21,000 gallons?** If "Yes", list each Substance & its Capacity. **Note:** Applicant may need a Storage Tank Site Specific Installation Permit. **23.0.1 Enter all substances & capacity of each; separate each set with semicolons.**	☐	Yes	☒	No
24.0	**Will the intended activity involve the use of a radiation source?**	☐	Yes	☒	No

CERTIFICATION

I certify that I have the authority to submit this application on behalf of the applicant named herein and that the information provided in this application is true and correct to the best of my knowledge and information.

Type or Print Name H. James Sewell

H. J. Sewell	Environmental Manager (Attorney-in-Fact)	9/4/19
Signature	**Title**	**Date**

Section 3

Application Fee

Shell Chemical Appalachia LLC
PO Box 4913
Houston, TX 77210

0118438 01 RE 0.425 **AUTO T4 0 6168 17105-283333 -P18456

COMMONWEALTH OF PENNSYLVANIA
DEP ENVIRONMENTAL PROTECTION
P.O. Box 2833
HARRISBURG PA 17105-2833 17105-2833

CHECK NO.: 0005060147
COMPANY CODE: UST8
CHECK DATE: 08/29/2019
CLIENT NO.: 0000825382

INVOICE NO.	INV. DATE	REFERENCE	DESCRIPTION	DISC. AMOUNT	NET AMOUNT
Y250MGDPA0002208	07/01/2019	1900001277		$0.00	$5,000.00
				TOTAL:	$5,000.00

RE0118438-0001_of_0001 6168-0018438 (F23S)

Direct all inquiries to:

APVENDORHELPDESK@SHELL.COM
We invite you to convert to electronic payments in the form of ACH.
Please contact us at the above address/phone number for further details.

DETACH AND RETAIN THIS STUB FOR YOUR RECORDS

Shell Chemical Appalachia LLC
PO Box 4913
Houston, TX 77210

62-20
311

Check No.: 0005060147

08/29/2019

PAY TO THE ORDER OF:
COMMONWEALTH OF PENNSYLVANIA
DEP ENVIRONMENTAL PROTECTION
P.O. Box 2833
HARRISBURG PA

**********$5,000.00

NOT VALID AFTER 180 DAYS

AUTHORIZED SIGNATURE

Five Thousand and 00/100 Dollars

CITIBANK, N.A.
ONE PENN'S WAY, NEW CASTLE, DE 19720

⑈0005060147⑈ ⑆031100209⑆ 3887215 4⑈

Section 4

Acts 14/67/68/127 Notifications and Receipts

Shell Chemical Appalachia LLC
300 Frankfort Road
Monaca, PA 15061

September 5, 2019

Daniel C. Camp III
Chairman, Beaver County Commissioners
Beaver County Courthouse
810 Third Street
Beaver, PA 15009

Dear Mr. Camp:

This notice is to inform you of Shell Chemical Appalachia LLC's intent to submit a renewal application to the Pennsylvania Department of Environmental Protection (PADEP) with the Permitting and Technical Services Section, Bureau of Water Standards and Facility Regulations for the following project:

Project:	Renewal of NPDES Permit PA0002208 A-2
Applicant Name:	Shell Chemical Appalachia LLC
Project Location:	300 Frankfort Road, Monaca, PA 15061
Applicant Contact:	Mr. H. James Sewell Shell Chemical Appalachia LLC 300 Frankfort Road Monaca, Beaver County, Pennsylvania 15061
Municipality/County:	Potter Township, Beaver County, PA

This letter is intended to satisfy the requirements of Pennsylvania Acts 14, 67, 68, and 127 and the Pennsylvania Municipalities Planning Code. Section 1905-A of the Commonwealth Administrative Code as amended by Act 14, requires that each applicant for a PADEP permit must give written notice to the municipality(ies) and the county(ies) in which the permitted activity is located. The written notices shall be received by the municipality(ies) and county(ies) at least 30 days before the PADEP may issue or deny the permit.

Acts 67 and 68, which amended the Municipalities Planning Code to support sound land use practices and planning efforts, direct state agencies to consider comprehensive plans and zoning ordinances when reviewing applications for permitting of facilities or infrastructure, and specify that state agencies may rely upon comprehensive plans and zoning ordinances under certain conditions as described in Sections 619.2 and 1105 of the Municipalities Planning Code.

Enclosed are the completed General Information Form (GIF) for this project. PADEP invites you to review the attached information and comment on the land use aspects of this project; please be specific to PADEP when identifying any areas of conflict. If you wish to submit comments for PADEP to consider in a land use review of this project, you must respond within 30 days to the PADEP regional office listed below. If no land use comments are received by the end of the comment period, PADEP will assume that there are not substantive land use conflicts and proceed with the normal application review process.

Please submit any comments concerning this project within 30 days from the date of receipt of this letter to the PADEP, Southwest Regional Office, Bureau of Water Standards and Facility Regulation, 400 Waterfront Drive, Pittsburgh, PA 15222-4745.

For more information about the land use review process, please visit www.depweb.state.pa.us, (keyword: Land Use Reviews). For more information about this project, please contact me at 724.709.2411.

Sincerely,

H. James Sewell
Environmental Manager
4301 Dutch Ridge Road
Beaver, PA 15009

Enclosures: Completed GIF

September 9,2019

Dear Customer:

The following is the proof-of-delivery for tracking number **776160782608**.

Delivery Information:

Status:	Delivered	**Delivered to:**	Receptionist/Front Desk
Signed for by:	C.COOK	**Delivery location:**	BEAVER, PA
Service type:	FedEx Standard Overnight	**Delivery date:**	Sep 6, 2019 09:39
Special Handling:	Deliver Weekday		

Signature image is available. In order to view image and detailed information, the shipper or payor account number of the shipment must be provided.

Shipping Information:

Tracking number:	776160782608	**Ship date:**	Sep 5, 2019
		Weight:	0.5 lbs/0.2 kg

Recipient:	**Shipper:**
BEAVER, PA US	Pittsburgh, PA US
Reference	25015523.54210.40000
Purchase order number:	60602686
Invoice number	04

Thank you for choosing FedEx.

Shell Chemical Appalachia LLC
300 Frankfort Road
Monaca, PA 15061

September 5, 2019

Ms. Rebecca Matsco
Chairwoman, Potter Township Supervisors
206 Mowry Road
Monaca, PA 15061

Dear Ms. Matsco:

This notice is to inform you of Shell Chemical Appalachia LLC's intent to submit a renewal application to the Pennsylvania Department of Environmental Protection (PADEP) with the Permitting and Technical Services Section, Bureau of Water Standards and Facility Regulations for the following project:

Project:	Renewal of NPDES Permit PA0002208 A-2
Applicant Name:	Shell Chemical Appalachia LLC
Project Location:	300 Frankfort Road, Monaca, PA 15061
Applicant Contact:	Mr. H. James Sewell Shell Chemical Appalachia LLC 300 Frankfort Road Monaca, Beaver County, Pennsylvania 15061
Municipality/County:	Potter Township, Beaver County, PA

This letter is intended to satisfy the requirements of Pennsylvania Acts 14, 67, 68, and 127 and the Pennsylvania Municipalities Planning Code. Section 1905-A of the Commonwealth Administrative Code as amended by Act 14, requires that each applicant for a PADEP permit must give written notice to the municipality(ies) and the county(ies) in which the permitted activity is located. The written notices shall be received by the municipality(ies) and county(ies) at least 30 days before the PADEP may issue or deny the permit.

Acts 67 and 68, which amended the Municipalities Planning Code to support sound land use practices and planning efforts, direct state agencies to consider comprehensive plans and zoning ordinances when reviewing applications for permitting of facilities or infrastructure, and specify that state agencies may rely upon comprehensive plans and zoning ordinances under certain conditions as described in Sections 619.2 and 1105 of the Municipalities Planning Code.

Enclosed are the completed General Information Form (GIF) for this project. PADEP invites you to review the attached information and comment on the land use aspects of this project; please be specific to PADEP when identifying any areas of conflict. If you wish to submit comments for PADEP to consider in a land use review of this project, you must respond within 30 days to the PADEP regional office listed below. If no land use comments are received by the end of the comment period, PADEP will assume that there are not substantive land use conflicts and proceed with the normal application review process.

Please submit any comments concerning this project within 30 days from the date of receipt of this letter to the PADEP, Southwest Regional Office, Bureau of Water Standards and Facility Regulation, 400 Waterfront Drive, Pittsburgh, PA 15222-4745.

For more information about the land use review process, please visit www.depweb.state.pa.us, (keyword: Land Use Reviews). For more information about this project, please contact me at 724.709.2411.

Sincerely,

H. James Sewell
Environmental Manager
4301 Dutch Ridge Road
Beaver, PA 15009

Enclosures: Completed GIF

September 9,2019

Dear Customer:

The following is the proof-of-delivery for tracking number **776160815496**.

Delivery Information:

Status:	Delivered	**Delivered to:**	Receptionist/Front Desk
Signed for by:	K.MAQKSTEINER	**Delivery location:**	MONACA, PA
Service type:	FedEx Standard Overnight	**Delivery date:**	Sep 6, 2019 08:39
Special Handling:	Deliver Weekday		

Signature image is available. In order to view image and detailed information, the shipper or payor account number of the shipment must be provided.

Shipping Information:

Tracking number:	776160815496	**Ship date:**	Sep 5, 2019
		Weight:	0.5 lbs/0.2 kg

Recipient:	**Shipper:**
MONACA, PA US	Pittsburgh, PA US

Reference	04104183.1
Purchase order number:	60602686
Invoice number	04

Thank you for choosing FedEx.

Section 5

PADEP NPDES Application Forms:

- Special Power of Attorney for Jim Sewell
- Checklist
- Forms 3800-PM-BPNPSM0027b/3800-PM-BPNPSM0008b
- Module 1 – Stormwater
- Module 5 – Cooling Water Intake Structures
- Chemical Additives Notification Forms
- PENNTOXSD Summary and Results

SHELL CHEMICAL APPALACHIA LLC

SPECIAL POWER OF ATTORNEY

Shell Chemical Appalachia LLC, a Delaware limited liability company (the "Company"), with offices at 910 Louisiana Street, Houston, Texas 77002, hereby appoints and authorizes Jim Sewell, who is managing environmental permitting and other regulatory affairs on behalf of the Company's efforts to construct a petrochemical facility in Beaver County, PA, as its true and lawful Attorney-in-Fact, in the name and on behalf of the Company in connection with Health, Safety, Security and Environment (HSS&E) related activities to:

1. Interface with government agencies;
2. Make binding representations to government agencies;
3. Sign permits, licenses and applications;
4. Sign discharge monitoring reports, routine compliance reports, routine compliance reports, fines, penalties, and other required HSS&E reports; and/or
5. Sign site access agreements not to exceed $10,000,000.00,

with full power and authority to do and perform every act and deed necessary and proper in the exercise of the forgoing powers as fully as the Company could do by any duly authorized officer, hereby ratifying and confirming all that the said Attorney-in-Fact shall lawfully do or cause to be done by virtue thereof.

This Special Power of Attorney is effective as of June 3, 2015, and shall continue in full force and effect until specifically revoked in writing. The authorities granted by this Special Power of Attorney may not be sub-delegated.

IN WITNESS WHEREOF, the Company has caused this Special Power of Attorney to be signed by its President, sealed with its company seal and attested to by its Secretary.

ATTEST:

Lynn S. Borgmeier
Lynn S. Borgmeier
Secretary

SHELL CHEMICAL APPALACHIA LLC

Ate S. Visser
President

SHELL CHEMICAL APPALACHIA LLC
LIMITED LIABILITY COMPANY
SEAL
DELAWARE
2012

WITNESS:

Sylvia Reyes

WITNESS:

Terry Barrett

STATE OF TEXAS §
§
COUNTY OF HARRIS §

This instrument was acknowledged before me on the 10th day of June, 2015 by Ate S. Visser, President of Shell Chemical Appalachia LLC, a Delaware limited liability company, on behalf of said company.

DEBORA MCKIBBIN
Notary Public, State of Texas
My Commission Expires
May 17, 2016

Debora McKibbin
Notary Public in and for the State of Texas

COMMONWEALTH OF PENNSYLVANIA
DEPARTMENT OF ENVIRONMENTAL PROTECTION
BUREAU OF CLEAN WATER

NATIONAL POLLUTANT DISCHARGE ELIMINATION SYSTEM (NPDES) APPLICATION FOR INDIVIDUAL PERMIT TO DISCHARGE INDUSTRIAL WASTEWATER

APPLICANT'S ✓ CHECKLIST

Applicant Name Shell Chemical Appalachia LLC

Check the following list to make sure you have included all the required information. Place a checkmark in the box provided for all items completed and/or provided.

ENCLOSE THIS CHECKLIST WITH YOUR COMPLETED APPLICATION. FAILURE TO SUBMIT ALL REQUIRED INFORMATION MAY RESULT IN DENIAL OF THE APPLICATION.

	REQUIREMENTS	Check ✓ If Included	DEP Use Only
1.	Application Fee. Amount Enclosed $ 5,000	☒	☐
2.	One signed original and 2 copies of the *completed* application with all applicable Analytical Results Tables.	☒	☐
3.	One additional copy of application for ECHD (if located in Erie County).	☐	☐
4.	One copy of application mailed to Delaware River Basin Commission (if discharge is in the Delaware River Basin)	☐	☐
5.	One copy of the General Information Form (1300-PM-BIT0001).	☒	☐
6.	Proper evidence of Act 14 municipal and county notifications.	☒	☐
7.	Evidence of newspaper publication for 4 consecutive weeks (new and modified discharges only)	☐	☐
8.	Copy of topographic map treatment facilities, intake structures, and outfalls.	☒	☐
9.	Site plan identifying significant site features.	☒	☐
10.	Line drawing / process flow diagram illustrating the flow of water and wastewater through the facility(ies), with a water balance.	☒	☐
11.	Chemical Additives Notification Form(s) (if applicable).	☒	☐
12.	Whole Effluent Toxicity Test Reports / WET Analysis Spreadsheet (if applicable).	☐	☐
13.	Documentation supporting variance requests (if applicable)	☐	☐
14.	Preparedness, Prevention and Contingency (PPC) Plan (optional)	☐	☐
15.	Module 1 – Stormwater, and attachments (if applicable).	☒	☐
16.	Module 2 – Groundwater Remediation, and attachments (if applicable).	☐	☐
17.	Module 3 – Aquatic Animal Production Facilities, and attachments (if applicable)	☐	☐
18.	Module 4 – Anti-Degradation, and attachments (if applicable)	☐	☐
19.	Module 5 – Cooling Water Intake Structures, and attachments (if applicable)	☒	☐
20.	Optional site-specific data: _____	☐	☐

pennsylvania
DEPARTMENT OF ENVIRONMENTAL PROTECTION

COMMONWEALTH OF PENNSYLVANIA
DEPARTMENT OF ENVIRONMENTAL PROTECTION
BUREAU OF CLEAN WATER

NATIONAL POLLUTANT DISCHARGE ELIMINATION SYSTEM (NPDES) APPLICATION FOR INDIVIDUAL PERMIT TO DISCHARGE INDUSTRIAL WASTEWATER

Items that have changed are indicated in red

Related ID#s (If Known)		DEP USE ONLY
Client ID# _____	**APS ID#** _____	Date Received:
Site ID# _____	**Facility ID#** _____	Permit No.:
		Auth ID: PDG?

GENERAL INFORMATION

Applicant/Operator Name	**Shell Chemical Appalachia LLC**	**25 Pa. Code § 92a.26 Fee Category** *(See instructions for fees)*

☐ New Permit (Anticipated Discharge Date: _____)
☒ Permit Renewal: NPDES No. PA **PA0002208 A-2**
Permit Expiration Date: JUNE 30, 2020
Permit Renewal Application Due Date: January 23, 2020
WQM Permit No(s).: _____
WQM Permit Issuance Date(s): _____
Currently Using eDMR System? ☒ Yes ☐ No Start Date: _____

☐ Minor facility without ELG
☐ Minor facility with ELG
☒ Major facility < 250 MGD
☐ Major facility ≥ 250 MGD
☐ CAAP

Is applicant a "small business"?
☐ Yes ☒ No

Is there on-site sewage treatment facility? ☐ Yes ☒ No
If Yes, is the facility operated by operator(s) certified in compliance with the Operators Certification Act? ☐ Yes ☐ No

Describe the nature of the business or operations resulting in discharge(s):
The plant will convert ethane feedstock into ethylene for manufacturing on site into various grades of linear low density and high density polyethylene as the facility's final product.

SIC Code	Primary?	Description	NAICS Code	Primary?	Description
2869	YES	Industrial Organic Chemicals, Not Elsewhere Classified (Ethylene)	325110	YES	Petrochemical Manufacturing
2821	YES	Plastics Materials, Synthetic Resins, and Nonvulcanizable Elastomers (Polyethylene)	325211	YES	Plastics Material and Resin Manufacturing

OTHER ENVIRONMENTAL PERMITS

Type of Permit	Agency That Issued Permit	Date Issued
Air Permit (PSD/nonattainment)	PADEP #04-00740A	June 18, 2015
Water Obstruction and Encroachment Permit/Joint Permit	PADEP E04-250-A1	June 12, 2015
Water Obstruction and Encroachment Permit/Joint Permit	US ACOE LRP-1997-1769	June 15, 2015
Stormwater (Plant site)	BCCD PAG02000414017	April 28, 2015
Stormwater (Parking Area)	BCDD PAC 040006	January 9, 2017
Site Specific Installation Permit (Tanks)	PADEP	April 28, 2017
Water Quality Management	PADEP 0417201	January 25, 2019

DISCHARGE INFORMATION

1. Attach a site plan, a line drawing with a water balance, and topographic map(s) that present the information requested in the instructions. Attached: ☒ Yes ☐ No

2. Total Hardness Upstream of Process Wastewater Outfall (mg/L): **98** Basis: **STORET**

3. List all discharge points (outfalls) and internal monitoring points (IMPs). If numbers were previously assigned in a permit, use those numbers. Order sequentially and use additional pages as necessary.

Outfall / IMP No.	LATITUDE			LONGITUDE			RECEIVING WATERS			
	Deg	Min	Sec	Deg	Min	Sec	Name of Receiving Waters	Ch. 93 Class.	Impaired?	TMDL?
001	40	40	22.996	-80	20	18.489	Ohio River (WWTP)	WWF	☒	☒
002	40	40	36.32	-80	19	43.83	Ohio River (East RR Pond)	WWF	☒	☒
003	40	40	36.32	-80	19	43.51	Ohio River (East RR Pond Overflow)	WWF	☒	☒
004	40	39	57.4943	-80	20	40.5531	Poorhouse Run (AC Pond Overflow)	WWF	☐	☐
005	40	40	50.29	-80	19	11.14	Ohio River (Mall Lot 2)	WWF	☒	☒
006	40	39	57.17	-80	20	09.11	Poorhouse Run (South Ponds)	WWF	☐	☐
007	40	39	57.0622	-80	20	9.1604	Poorhouse Run (South Pond Overflow)	WWF	☐	☐
008	40	39	56.27	-80	20	32.18	Poorhouse Run (CR Pond)	WWF	☐	☐
009	40	39	56.2702	-80	20	32.187	Poorhouse Run (CR Pond Overflow)	WWF	☐	☐
010	40	39	54.71	-80	20	22.16	Poorhouse Run (West RR Basin)	WWF	☐	☐
011	40	40	4.0	-80	20	48.0	Ohio River (Screen Backwash)	WWF	☒	☒
012	40	39	54.3288	-80	20	21.869	Poorhouse Run (West Basin Overflow)	WWF	☐	☐
013	40	40	33	-80	20	03	Ohio River (North Pond)	WWF	☒	☒
014	40	40	29.23	-80	19	58.05	Ohio River (North Pond Overflow)	WWF	☒	☒
015	40	40	47.53	-80	19	19.32	Ohio River (Groundwater Seep)	WWF	☒	☒
016	40	40	37..223	-80	19	50.142	Ohio River (Storm water from plant and Duquesne and PennDOT rights-of-way)	WWF	☒	☒
021	40	39	40.28	-80	20	33.68	Poorhouse run (Storm water runoff Electric Tower Rd)	WWF	☐	☐
017	40	39	56.295	-80	20	48.680	Poorhouse Run (Storm water runoff WWTP area)	WWF	☐	☐
018	40	39	22.355	-80	20	56.304	Racoon Creek (Parking Area Pond A West)	WWF	☒	☒
019	40	39	26.757	-80	20	50.466	Racoon Creek (Parking Area Pond A West Overflow)	WWF	☒	☒
020	40	39	32.633	-80	20	41.880	Racoon Creek (Parking Area Pond B East)	WWF	☒	☒
022	40	39	32.274	-80	20	43.058	Racoon Creek (Parking Area Pond B East Overflow)	WWF	☒	☒
023	40	39	38.651	-80	20	35.918	Raccoon Creek (Training Center former PGT)	WWF	☒	☒

101							Ohio River (IMP for ELG Compliance)	WWF	☒	☒
108	As needed						Poorhouse Run through Outfall 008 or the Ohio River through Outfall 011 or 013 (Hydrotest)	WWF	☐	☐
201							Ohio River through Outfall 001 (Cooling Tower Blowdown)	WWF	☒	☒

4. List all outfalls and IMPs in the same order as in question 2, above, and provide the requested information. Attach additional pages as necessary. See instructions.

Outfall / IMP No.	DISCHARGE CHARACTERIZATION							Design Flow (MGD)	Average Flow During Production / Operation (MGD)	Maximum Flow During Production / Operation (MGD)
	Process	Non-Process	Stormwater	Sewage	Groundwater	AAPF	Combined			
001	☒	☒	☒	☐	☐	☐	☒	~3.75	~3.75	~3.75
002	☐	☐	☒	☐	☐	☐	☐			
003	☐	☐	☒	☐	☐	☐	☐			
004	☐	☐	☒	☐	☐	☐	☐			
005	☐	☐	☐	☐	☒	☐	☐			
006	☐	☐	☒	☐	☐	☐	☐			
007	☐	☐	☒	☐	☐	☐	☐			
008	☐	☐	☒	☐	☐	☐	☐			
009	☐	☐	☒	☐	☐	☐	☐			
010	☐	☐	☒	☐	☐	☐	☐			
011	☐	☐	☒	☐	☐	☐	☐			
012	☐	☐	☒	☐	☐	☐	☐			
013	☐	☐	☒	☐	☐	☐	☐			
014	☐	☐	☒	☐	☐	☐	☐			
015	☐	☐	☐	☐	☒	☐	☐			
016	☐	☐	☒	☐	☐	☐	☐			
021	☐	☐	☐	☐	☐	☐	☐			
017	☐	☐	☒	☐	☐	☐	☐			
018	☐	☐	☒	☐	☐	☐	☐			
019	☐	☐	☒	☐	☐	☐	☐			
020	☐	☐	☒	☐	☐	☐	☐			
022	☐	☐	☒	☐	☐	☐	☐			
023	☐	☐	☒	☐	☐	☐	☐			
101	☒	☐	☐	☐	☐	☐	☐	~1.28	~1.28	~1.28

108	☐	☒	☐	☐	☐	☐	☐			
201	☐	☒	☐	☐	☐	☐	☐	~2.57	~2.57	~2.57

5. List all outfalls and IMPs in the same order as in questions 2 and 3, above, and provide the requested information. Attach additional pages as necessary. See instructions.

Outfall / IMP No.	Wastewater or Stormwater Description	Discharge Type	Frequency		Batch Discharges		
			Hours / Day	Days / Week	No. Discharge Cycles/Day	Length of Discharge Cycle (Hrs)	Batch Discharge Rate (MGD)
001	Effluent from the industrial waste treatment plant, cooling tower blowdowns and treated stormwater from the accidentally contaminated stormwater pond.	Continuous	24	7	NA	NA	NA
002	East Pond - See Site Plan for drainage area.	Stormwater	NA	NA	NA	NA	NA
003	East Pond Overflow	Stormwater	NA	NA	NA	NA	NA
004	AC Pond Overflow	Stormwater	NA	NA	NA	NA	NA
005	Mall Lot 2 Ground Water	Groundwater	NA	NA	NA	NA	NA
006	South Pond - See Site Plan for drainage area.	Stormwater	NA	NA	NA	NA	NA
007	South Pond Overflow	Stormwater	NA	NA	NA	NA	NA
008	CR Pond – See Site plan for drainage area	Stormwater	NA	NA	NA	NA	NA
009	CR Pond Overflow	Stormwater	NA	NA	NA	NA	NA
010	West RR Basin - – See Site plan for drainage area	Stormwater	NA	NA	NA	NA	NA
011	Intake back wash water	Stormwater	NA	NA	NA	NA	NA
012	West RR Basin Overflow	Stormwater	NA	NA	NA	NA	NA
013	North Pond – See Site plan for drainage area	Stormwater	NA	NA	NA	NA	NA
014	North Pond Overflow	Stormwater	NA	NA	NA	NA	NA
015	Groundwater Seep	Groundwater	NA	NA	NA	NA	NA
016	Storm water from plant yard areas and Duquesne and PennDOT rights-of-way	Stormwater	NA	NA	NA	NA	NA
021	Storm water runoff	Stormwater	NA	NA	NA	NA	NA
017	Storm water runoff WWTP area	Stormwater	NA	NA	NA	NA	NA
018	Parking Area Pond A West	Stormwater	NA	NA	NA	NA	NA
019	Parking Area Pond A West Overflow	Stormwater	NA	NA	NA	NA	NA
020	Parking Area Pond B East	Stormwater	NA	NA	NA	NA	NA
022	Parking Area Pond B East Overflow	Stormwater	NA	NA	NA	NA	NA

023	Training Center former PGT	Stormwater	NA	NA	NA	NA	NA
101	IMP for ELG Compliance	Continuous	24	7	NA	NA	NA
108	Hydro Test Waters	Batch - Intermittent			Varies - As needed during plant startup		
201	Cooling Tower Blowdown	Continuous	24	7	NA	NA	NA

TREATMENT FACILITY INFORMATION

Complete this sheet for each existing and proposed industrial waste, sewage and/or stormwater treatment facility (one sheet per facility).

Treatment Facility Name: **Wastewater Treatment Plant**	Effluent Discharged To Outfall / IMP No.: **101 and 001**

1. Provide a narrative description of the wastewater treatment process. Attach a line drawing or process flow diagram to the application.

   The primary function of the Wastewater Treatment Plant (WWTP) is to ensure that all wastewater streams generated from the process units and utilities as well as the process paved area runoff generated from rainstorms are sufficiently treated for discharging to the Ohio River. The WWTP will consist of primary flow equalization and oil removal, followed by secondary activated sludge bioreactor (including clarifier), and tertiary sand filter

2. List each treatment unit at the facility in sequential order of treatment.

Treatment Unit Description	Method for Handling and Disposal of Solid or Liquid Residue Resulting from Treatment
Oil Removal	**Recovered Oil sent offsite**
Bioreactor Aeration	
Secondary Clarifier	**Biosludge Cake to offsite disposal**
Tertiary Sand Filter	

3. Describe any proposed upgrades to this treatment facility within the next five years.

   NONE planned

4. Identify all chemicals that have been used for wastewater treatment over the past two years.

Chemical Name	Purpose	Max Usage Rate	Units	Acrylamide?
Not Applicable - New Wastewater Treatment System that is not yet operational				

5. List any additional proposed wastewater treatment chemicals anticipated in the next five years.

Chemical Name	Purpose	Max Usage Rate	Units	Acrylamide?
Sulfuric Acid	pH adjustment	As needed		
Phosphoric Acid	Nutrients for Biotreater	As needed		
Urea	Nutrients for Biotreater	As needed		
Core Shell 71301 or Equivalent	Enhance solids settling/thickening of biosludge (waste activated sludge)	As needed		
Nalco 71306 or Equivalent	Improve dewatering of thickened biosludge (waste activated sludge)	As needed		

CHEMICAL ADDITIVES

1. Identify all chemical additives that have been introduced to any waste stream over the past two years.

Chemical Additive Name	Outfall / IMP No.	Purpose	Usage Frequency	Max Usage Rate	Units
No additives have been introduced into any waste stream outfall discharge					

2. List all chemical additives that the applicant is requesting approval to use upon issuance of the permit by DEP. Identify the point of introduction on a line or process diagram.

Chemical Additive Name	Outfall / IMP No.	Purpose	Proposed Usage Frequency	Proposed Max Usage Rate *	Units
Nalco 3DT396	001	Scale inhibitor	Continuous	17,142	ld/day
3D Trasar 3DT184	001	Corrosion inhibitor	Continuous	125,955	lb/day
3D Trasar 3DT198	001	Corrosion inhibitor	Continuous	975	lb/day
Nalco 7408	001	Chlorine scavenger	Continuous	3,608	lb/day
Nalco 7473	001	Anti foam	Intermittent	3,541	lb/day
3D Trasar 3DT177 or Equivalent	001	Corrosion inhibitor	Continuous	117,473	lb/day
3D Trasar 3DT197 or Equivalent	001	Yellow metal corrosion inhibitor	Continuous	647	lb/day
3D Trasar 3DT294 or Equivalent	001	Dispersant/Scale inhibitor	Continuous	38,884	lb/day
Elimin-Ox or equivalent	001	Scavenge any residual dissolved oxygen from deaerated water	Continuous	3,439	lb/day
NALCO 1741 or Equivalent	001	pH control and corrosion inhibitor HRSGs	Continuous	15,398	lb/day
Nalco 71D5 PLUS or Equivalent	001	Antifoam	Intermittent	175	lb/day
NALCO 73550 or Equivalent	001	Non-ionic bio detergent.	Intermittent	411	lb/day
Sodium Hypochlorite (12%)	001	Prevent biological growth in different streams	Continuous	47	lb/day
Sodium bisulfite (30%)	001	Scavenge any residual chlorine	Continuous	6,364	lb/day
Tri-Act 1820 or Equivalent	001	pH adjustment of deaerated water	Continuous	2,669	lb/day
NALCO H-550 or Equivalent	001	Non-oxidant biocide	Intermittent	Concentration of Glutaraldehyde 900 ug/L at discharge 001.	
Citric Acid	011/013	Hydrotest	Intermittent	5,061	lb/day
Nalco 71306	011/013	Hydrotest	Intermittent	32	lb/day
Sodium Nitrite	011/013	Hydrotest	Intermittent	197	lb/day

- Max usage rate from PENNTOX output criteria. Actual expected usage will be much less.

3. List all chemical additives in the same order as question 2, above, and provide the requested information. For chemical additives that are not on DEP's Approved List, submit New Chemical Additive Request Form(s) to DEP's Central Office. For chemical additives that are on DEP's Approved List but a Chemical Additives Notification Form was not previously submitted, attach a Chemical Additives Notification Form to the application.

Chemical Additive Name	On Approved List?	Notification Form Attached?	Notification Form Previously Submitted?	Notification Form Submission Date	Analytical Method
Nalco 3DT396	☒	☒	☐	With Application	
3D Trasar 3DT184	☒	☒	☐	With Application	
3D Trasar 3DT198	☒	☒	☐	With Application	
Nalco 7408	☒	☒	☐	With Application	
Nalco 7473	☒	☒	☐	With Application	
3D Trasar 3DT177 or Equivalent	☒	☐	☒	11/2015	
3D Trasar 3DT197 or Equivalent	☒	☐	☒	11/2015	
3D Trasar 3DT294 or Equivalent	☒	☐	☒	11/2015	
Elimin-Ox or equivalent	☒	☐	☒	11/2015	
NALCO 1741 or Equivalent	☒	☐	☒	11/2015	
Nalco 71D5 PLUS or Equivalent	☒	☐	☒	11/2015	
NALCO 73550 or Equivalent	☒	☐	☒	11/2015	
Sodium Hypochlorite (12%)	☒	☐	☒	11/2015	
Sodium bisulfite (30%)	☒	☐	☒	11/2015	
Tri-Act 1820 or Equivalent	☒	☐	☒	11/2015	
NALCO H-550 or Equivalent	☒	☐	☒	11/2015	
Citric Acid	☒	☐	☒	6/2019	
Nalco 71306	☒	☐	☒	6/2019	
Sodium Nitrite	☒	☐	☒	6/2019	

1. **Nalco 8140 and Nalco NALCLEAR 7768 are compounds that will be utilized in the raw water treatment system as coagulant/flocculent and as such the Project does not consider these additives under the definition of "Chemical Additives" per PADEP definition in the instructions for Approved Chemical Additives List**

PRODUCTION DATA FOR EFFLUENT LIMITATION GUIDELINES (ELGs)

Complete this section for each production line with an applicable ELG. See instructions and use additional sheets as necessary.

1. Production line and process description: **Ethylene Cracker Unit (ECU)**
2. Applicable ELG: 40 CFR: **414** Subpart: **91**
3. Is this production considered a new source? ☒ Yes ☐ No
4. Outfall / IMP No. receiving wastewater: **101**
5. Units of production measurement for ELG: **Million pounds per year**
6. Design production capacity: **1.65 Million tons per year**
7. Complete the table below for the five last years of production. Report production data using the same units of measurement as reported in question 4.

Parameter	Production Years				
	20	20	20	20	20
Total Annual Production	Not Applicable – New Facility that is not operational				
Max Monthly Production					
Month of Max Production					
Avg Annual Production					
Avg Production Hours/Day					
Avg Production Days/Month					
Avg Annual Water Usage (MGD)					
Avg Annual Wastewater Flow (MGD)					

8. Average annual production over the past five years: **Not Applicable** Units:
9. Anticipated average annual production for the next five years: **1.65** Units: **Million tons**
10. Explain the basis for the anticipated average annual production for the next five years:

Engineering Estimated based on Equipment Design and Capacity

11. Attach any pertinent information from the applicable ELG in 40 CFR that would allow DEP to appropriately determine technology-based effluent limitations.

PRODUCTION DATA FOR EFFLUENT LIMITATION GUIDELINES (ELGs)

Complete this section for each production line with an applicable ELG. See instructions and use additional sheets as necessary.

7. Production line and process description: **Polyethylene (PE) Units 1 and 2**
8. Applicable ELG: 40 CFR: **414** Subpart: **91**
9. Is this production considered a new source? ☒ Yes ☐ No
10. Outfall / IMP No. receiving wastewater: **101**
11. Units of production measurement for ELG: **Million pounds per year**
12. Design production capacity: **0.606 Million tons per year**
7. Complete the table below for the five last years of production. Report production data using the same units of measurement as reported in question 4.

Parameter	Production Years				
	20	20	20	20	20
Total Annual Production	Not Applicable – New Facility that is not operational				
Max Monthly Production					
Month of Max Production					
Avg Annual Production					
Avg Production Hours/Day					
Avg Production Days/Month					
Avg Annual Water Usage (MGD)					
Avg Annual Wastewater Flow (MGD)					

12. Average annual production over the past five years: **Not Applicable** Units:
13. Anticipated average annual production for the next five years: **0.606** Units: **Million tons per year EACH**
14. Explain the basis for the anticipated average annual production for the next five years:

Engineering Estimated based on Equipment Design and Capacity

15. Attach any pertinent information from the applicable ELG in 40 CFR that would allow DEP to appropriately determine technology-based effluent limitations.

PRODUCTION DATA FOR EFFLUENT LIMITATION GUIDELINES (ELGs)

Complete this section for each production line with an applicable ELG. See instructions and use additional sheets as necessary.

13. Production line and process description: **Polyethylene (PE) Unit 3**
14. Applicable ELG: 40 CFR: **414** Subpart: **91**
15. Is this production considered a new source? ☒ Yes ☐ No
16. Outfall / IMP No. receiving wastewater: **101**
17. Units of production measurement for ELG: **Million pounds per year**
18. Design production capacity: **0.551 Million tons per year**
7. Complete the table below for the five last years of production. Report production data using the same units of measurement as reported in question 4.

Parameter	Production Years				
	20	20	20	20	20
Total Annual Production	Not Applicable – New Facility that is not operational				
Max Monthly Production					
Month of Max Production					
Avg Annual Production					
Avg Production Hours/Day					
Avg Production Days/Month					
Avg Annual Water Usage (MGD)					
Avg Annual Wastewater Flow (MGD)					

16. Average annual production over the past five years: **Not Applicable** Units:
17. Anticipated average annual production for the next five years: **0.551** Units: **Million tons**
18. Explain the basis for the anticipated average annual production for the next five years:

Engineering Estimated based on Equipment Design and Capacity

19. Attach any pertinent information from the applicable ELG in 40 CFR that would allow DEP to appropriately determine technology-based effluent limitations.

ANTI-DEGRADATION

If the applicant is proposing a new or increased discharge to High Quality (HQ) or Exceptional Value (EV) waters, Module 4 (Anti Degradation Module) must be attached to the application. In addition, for HQ waters only, if the analysis concludes that the new or increased discharge will produce a measurable change in water quality, a social or economic justification (SEJ) must be attached if the applicant desires approval for the discharge.

1. Is the Anti-Degradation Module (Module 4) attached to the application? ☐ Yes ☒ No
2. Is a social or economic justification (SEJ) (HQ waters only) attached to the application? ☐ Yes ☒ No

VARIANCES

If the applicant is requesting a variance authorized under federal regulations at 40 CFR 122.21(m), complete the section below and attach to this application documentation necessary under federal regulations to support the variance request.

1. Description of variance requested: **NOT APPLICABLE**
2. Federal regulation authorizing the variance: _____
3. Supporting documentation attached to the application? ☐ Yes ☐ No

LABORATORY INFORMATION

Did an off-site laboratory perform any of the analyses required by this application? ☐ Yes ☐ No
If Yes, provide the information below.

Name	**Test America**	Analyses Performed:
Address	**301 Alpha Drive, Pittsburgh, PA 15238**	**All analysis in this application**
Phone	**(412) 915-9132**	
Name		Analyses Performed:
Address		
Phone	( )	

COMPLIANCE HISTORY REVIEW

Is the facility owner or operator in violation of any DEP regulation, permit, order or schedule of compliance at this or any other facility?
☒ Yes ☐ No

If Yes, list each permit, order or schedule of compliance and provide compliance status. Use additional sheets as necessary.

Permit Program:	PA Residual Waste Regulations	Permit No.:	NA
Permit Program:	NPDES	Permit No.:	PA0002208 A-2
Permit Program:		Permit No.:	

Brief Description of Non-Compliance:

1. Residual Waste Regulation - Regulated fill was transported to facility in OH without adequate documentation.
2. NPDES – Instantaneous max and average Total Suspended Solids exceedance at outfall 015

Steps Taken to Achieve Compliance	Date(s) Compliance Achieved
1. Implemented procedure to require proper documentation	June 12, 2019
2. Training on how to obtain representative sample	July 2019

Current Compliance Status: ☒ In Compliance ☐ In Non-Compliance

POLLUTANT IDENTIFICATION AND ANALYSIS

1. Summary of Required Analyses (see instructions):

Outfall / IMP No.	Pollutant Groups which must be sampled for and analyzed							Other Pollutants Analyzed
	Group 1	Group 2	Group 3	Group 4	Group 5	Group 6	Group 7	
001	☒	☒	☒	☒	☒	☒	☐	
101	☒	☒	☒	☒	☒	☒	☐	
108	☐	☐	☐	☐	☐	☐	☐	**Closed system analysis per parameters in permit**
201	☐	☐	☐	☐	☐	☐	☐	**Included in 001**
	☐	☐	☐	☐	☐	☐	☐	
	☐	☐	☐	☐	☐	☐	☐	
	☐	☐	☐	☐	☐	☐	☐	
	☐	☐	☐	☐	☐	☐	☐	
	☐	☐	☐	☐	☐	☐	☐	
	☐	☐	☐	☐	☐	☐	☐	
	☐	☐	☐	☐	☐	☐	☐	
	☐	☐	☐	☐	☐	☐	☐	
	☐	☐	☐	☐	☐	☐	☐	
	☐	☐	☐	☐	☐	☐	☐	

2. Is screening for 2,3,7,8-tetrachlorodibenzo-p-dioxin (TCDD) required? ☐ Yes ☒ No

Method used: **NA**	Describe results: **NA**

3. Other Potentially Toxic Pollutants Known or Expected to be Present in the Discharge.

a. GC/MS "Five Peaks" Pollutants (see instructions).

Outfall / IMP No.	Group Number (3 - 6)	Chemical or Compound Name	Quantitation Limit (µg/L)	Avg Effluent Concentration (µg/L)	Max Effluent Concentration (µg/L)	No. Samples Positive / No. Analyzed
						/
						/
						/
						/

b. Other Potential Pollutants.

Outfall / IMP No.	Chemical Substance or Compound Name	Reason/Suspected Reason for Presence in Discharge	Avg Concentration (µg/L)	Indicate if Presence is Known (K) or Suspected (S)
001	Glutaraldehyde	Present in biocide	900 ug/L	K

☐ If additional peaks were not available for one or more groups with the method used check here and attach an explanation of why the method was selected.

4. Additional Analysis Results Tables may be attached to provide any of the optional site-specific information discussed in Appendix A of the instructions.
Optional site-specific data is attached to this application? ☐ Yes ☒ No

WHOLE EFFLUENT TOXICITY

SECTION NOT APPLICABLE

1. Summarize the results of all Whole Effluent Toxicity (WET) tests completed in the last five years (or attach a separate sheet with these results). If required by the NPDES permit, attach a copy of DEP's WET Analysis Spreadsheet to the application (electronic transmission to DEP is acceptable) that provides replicate data for all species tested and for the most recent four consecutive tests.

   Outfall No. Tested:

   Type of tests completed: ☐ Chronic ☐ Acute

   Dilution series used: %, %, %, %, and % effluent

   Target Instream Waste Concentration (TIWC): % effluent

Test Date	Ceriodaphnia Results (% Effluent)			Pimephales Results (% Effluent)			Pass or Fail
	Survival NOEC	Reproduction NOEC	LC50	Survival NOEC	Growth NOEC	LC50	

2. Describe the status of any Phase I or II Toxicity Reduction Evaluation (if applicable):

PREPAREDNESS, PREVENTION AND CONTINGENCY (PPC) PLAN

The applicant may optionally attach its PPC Plan or related plan to the application. This information may be useful to DEP in completing its review of the application. If the PPC Plan is not attached to the application, DEP may request submission of the Plan during the review. Electronic transmission of large PPC Plans is encouraged.

Type or Description of Plan (e.g., PPC, SPCC, etc.)	Attached?	Date of Latest Plan Update
	☐	
	☐	
	☐	

COOLING WATER INTAKE STRUCTURES

1. Does the facility use cooling water? ☒ Yes ☐ No If no, the rest of this section may remain blank

2. Identify the source(s) of cooling water: ☒ Surface water ☐ Groundwater ☐ Treated effluent ☐ Treated public water supply ☐ Untreated public water supply ☐ Independent supplier: _____ ☐ Other: _____

3. Facility Type: ☐ New Facility ☐ New Offshore O&G Facility ☒ Existing Facility ☐ Facility below 2 MGD or 25% cooling

4. Is Module 5 is attached to this application? ☒ Yes ☐ No

5. Number of CWISs at facility: **ONE**

6. CWIS Flow Data:

CWIS ID No.	DIF (MGD)	AIF (MGD)	Max Screen Velocity (fps)	% Used for Cooling	% Mean Annual Flow
1	**21.4**	**18**	**0.5**	**87% of AIF**	**0.08%**

7. Type of CWIS Location:

CWIS ID No.	Type (check box):				
1	☐ Intake Canal	☐ Embayment, Bank or Cove	☐ Submerged Offshore Intake	☐ Near-shore Submerged Intake	☒ Shoreline Submerged Intake
	☐ Intake Canal	☐ Embayment, Bank or Cove	☐ Submerged Offshore Intake	☐ Near-shore Submerged Intake	☐ Shoreline Submerged Intake
	☐ Intake Canal	☐ Embayment, Bank or Cove	☐ Submerged Offshore Intake	☐ Near-shore Submerged Intake	☐ Shoreline Submerged Intake

8. Describe all Impingement Control Technologies employed:

Modified Traveling Screens

9. Describe all Entrainment Control Technologies employed:

Closed-Cycle Recirculating System

10. Has the facility conducted any impingement or entrainment studies in the last 10 years? ☐ Yes ☒ No If yes, attach the results

11. Attach any information required by your current permit to the application (existing facilities only)

ANALYSIS RESULTS TABLE
POLLUTANT GROUP 1

Please read instructions carefully before completing this form.

APPLICANT NAME	Shell Chemical Appalachia LLC

☒ **Outfall / IMP Number 001** (Show location of sampling point on Line Drawing)
☐ Treatment Facility Influent Sampling Results (Show location of sampling point on Line Drawing)
☐ Intake Sampling Results (Specify Source: _____)
☐ Background (Upstream) Sampling Results (Specify Location: _____)
☒ New Discharge (Basis for Information: **Engineering Estimate**)

POLLUTANT GROUP 1 PARAMETERS	CONCENTRATION / MASS PRESENT						No. Analyses	No. "Non-Detect" Results	QL Used	Method Used
	Min/Max Daily Value		Max Avg Monthly Value		Long-Term Avg Value					
	Conc	Mass (lbs/day)	Conc	Mass (lbs/day)	Conc	Mass (lbs/day)				
BOD_5 (mg/L)	36	1,121	18	561						
COD (mg/L)	87	2,743	66	2,057						
TOC (mg/L)	20	620	10	310						
TSS (mg/L)	57	1,795	29	898						
Ammonia-Nitrogen (mg/L)	1.8	51	0.9	25.5						
Temperature (Winter) (°F)	95	XXX	95	XXX		XXX		XXX	XXX	
Temperature (Summer) (°F)	104	XXX	104	XXX		XXX		XXX	XXX	
pH – Minimum (S.U.)	6	XXX	XXX	XXX		XXX		XXX	XXX	
pH – Maximum (S.U.)	9	XXX	XXX	XXX		XXX		XXX	XXX	
Fecal Coliform (No./100 mL)	NA	XXX	NA	XXX		XXX			XXX	
Oil and Grease (mg/L)	10	304	5	152						
TRC (mg/L)	NA	XXX	NA	XXX		XXX				
Total Phosphorus (mg/L)	3.7	101.6	1.85	50.8						
TKN (mg/L)	0.05	1.4	0.02	0.7						
Nitrite + Nitrate-Nitrogen (mg/L)	4.7	133.9	2.4	66.9						
Total Dissolved Solids (mg/L)	3,317	91,442	3,317	91,442						
Color (Pt-Co Units)	NA	XXX	NA	XXX		XXX				
Bromide (mg/L)	NA	NA	NA	NA						
Chloride (mg/L)	313	8,624	156.6	4,312						
Sulfate (mg/L)	812	22,578	405.8	11,289						
Sulfide (mg/L)	0.1	2.4	0.1	1.2						
Surfactants (mg/L)	NA	NA	NA	NA						
Fluoride (mg/L)	1.1	31.2	0.6	15.6						
Total Hardness (mg/L)	702.9	19,355	351.4	9,677						

ANALYSIS RESULTS TABLE
POLLUTANT GROUP 2

Please read instructions carefully before completing this form.

APPLICANT NAME	Shell Chemical Appalachia LLC

☒ **Outfall / IMP Number 001** (Show location of sampling point on Line Drawing)
☐ Treatment Facility Influent Sampling Results (Show location of sampling point on Line Drawing)
☐ Intake Sampling Results (Specify Source: _____)
☐ Background (Upstream) Sampling Results (Specify Location: _____)
☒ New Discharge (Basis for Information: **Engineering Estimate**)

POLLUTANT GROUP 2 PARAMETERS	CONCENTRATION / MASS PRESENT						No. Analyses	No. "Non-Detect" Results	QL Used	Method Used
	Min/Max Daily Value		Max Avg Monthly Value		Long-Term Avg Value					
	Conc	Mass (lbs/day)	Conc	Mass (lbs/day)	Conc	Mass (lbs/day)				
Aluminum, Total (µg/L)	4,873	134	2,436	67						
Chromium, Total (µg/L)	139	4.1	70	2.0						
Copper, Total (µg/L)	55.6	1.6	27.8	0.8						
Cyanide, Total (µg/L)	55.6	1.6	27.8	0.8						
Iron, Total (µg/L)	7,577	210	3,788	105						
Iron, Dissolved (µg/L)	7,577	210	3,788	105						
Manganese, Total (µg/L)	139	4.1	69.5	2.0						
Nickel, Total (µg/L)	13.9	0.4	7.0	0.2						
Phenols, Total (µg/L)	24.5	0.7	12.3	0.4						

1. ***Group 2 pollutants not listed above are not expected to be in wastewater based on process engineering and similar reference plants.***

ANALYSIS RESULTS TABLE
POLLUTANT GROUP 3

Please read instructions carefully before completing this form.

APPLICANT NAME	Shell Chemical Appalachia LLC

☒ **Outfall / IMP Number 001** (Show location of sampling point on Line Drawing)
☐ Treatment Facility Influent Sampling Results (Show location of sampling point on Line Drawing)
☐ Intake Sampling Results (Specify Source: _____)
☐ Background (Upstream) Sampling Results (Specify Location: _____)
☒ New Discharge (Basis for Information:) **Engineering Estimate**

POLLUTANT GROUP 3 PARAMETERS	CONCENTRATION / MASS PRESENT						No. Analyses	No. "Non-Detect" Results	QL Used	Method Used
	Min/Max Daily Value		Max Avg Monthly Value		Long-Term Avg Value					
	Conc	Mass (lbs/day)	Conc	Mass (lbs/day)	Conc	Mass (lbs/day)				
Benzene (µg/L)	123	3.6	61	0.5						
Ethylbenzene (µg/L)	49	1.4	25	0.7						
Toluene (µg/L)	61	1.8	31	0.9						

1. ***Group 3 pollutants not listed above are not expected to be in wastewater based on process engineering and similar reference plants.***

ANALYSIS RESULTS TABLE
POLLUTANT GROUP 4

Please read instructions carefully before completing this form.

APPLICANT NAME	Shell Chemical Appalachia LLC

☒ **Outfall / IMP Number 001** (Show location of sampling point on Line Drawing)
☐ Treatment Facility Influent Sampling Results (Show location of sampling point on Line Drawing)
☐ Intake Sampling Results (Specify Source: _____)
☐ Background (Upstream) Sampling Results (Specify Location: _____)
☒ New Discharge (Basis for Information: **Engineering Estimate**)

POLLUTANT GROUP 4 PARAMETERS	CONCENTRATION / MASS PRESENT						No. Analyses	No. "Non-Detect" Results	QL Used	Method Used
	Min/Max Daily Value		Max Avg Monthly Value		Long-Term Avg Value					
	Conc	Mass (lbs/day)	Conc	Mass (lbs/day)	Conc	Mass (lbs/day)				
2-Chlorophenol (µg/L)	***Group 4 pollutants not expected to be in wastewater based on process engineering and similar reference plants***									
2,4-Dichlorophenol (µg/L)										
2,4-Dimethylphenol (µg/L)										
4,6-Dinitro-o-Cresol (µg/L)										
2,4-Dinitrophenol (µg/L)										
2-Nitrophenol (µg/L)										
4-Nitrophenol (µg/L)										
P-Chloro-m-Cresol (µg/L)										
Pentachlorophenol (µg/L)										
Phenol (µg/L)										
2,4,6-Trichlorophenol (µg/L)										

ANALYSIS RESULTS TABLE
POLLUTANT GROUP 5

Please read instructions carefully before completing this form.

APPLICANT NAME	Shell Chemical Appalachia LLC

☒ **Outfall / IMP Number 001** (Show location of sampling point on Line Drawing)
☐ Treatment Facility Influent Sampling Results (Show location of sampling point on Line Drawing)
☐ Intake Sampling Results (Specify Source: _____)
☐ Background (Upstream) Sampling Results (Specify Location: _____)
☒ New Discharge (Basis for Information: **Engineering Estimate**)

POLLUTANT GROUP 5 PARAMETERS	CONCENTRATION / MASS PRESENT						No. Analyses	No. "Non-Detect" Results	QL Used	Method Used
	Min/Max Daily Value		Max Avg Monthly Value		Long-Term Avg Value					
	Conc	Mass (lbs/day)	Conc	Mass (lbs/day)	Conc	Mass (lbs/day)				
Acenaphthene (µg/L)	49	1.4	25	0.7						
Acenaphthylene (µg/L)	49	1.4	25	0.7						
Anthracene (µg/L)	49	1.4	25	0.7						
Benzo(*a*)Anthracene (µg/L)	2.45	0.07	1.2	0.04						
Benzo(*a*)Pyrene (µg/L)	2.45	0.07	1.2	0.04						
3,4-Benzo-fluoranthene (µg/L)	2.45	0.07	1.2	0.04						
Fluorene (µg/L)	49	1.4	25	0.7						

1. ***Group 5 pollutants not listed above are not expected to be in wastewater based on process engineering and similar reference plants.***

ANALYSIS RESULTS TABLE
POLLUTANT GROUP 6

Please read instructions carefully before completing this form.

APPLICANT NAME	Shell Chemical Appalachia LLC

☒ **Outfall / IMP Number 001** (Show location of sampling point on Line Drawing)
☐ Treatment Facility Influent Sampling Results (Show location of sampling point on Line Drawing)
☐ Intake Sampling Results (Specify Source: _____)
☐ Background (Upstream) Sampling Results (Specify Location: _____)
☒ New Discharge (Basis for Information: **Engineering Estimate**)

POLLUTANT GROUP 6 PARAMETERS	CONCENTRATION / MASS PRESENT						No. Analyses	No. "Non-Detect" Results	QL Used	Method Used
	Min/Max Daily Value		Max Avg Monthly Value		Long-Term Avg Value					
	Conc	Mass (lbs/day)	Conc	Mass (lbs/day)	Conc	Mass (lbs/day)				

Group 6 pollutants not expected to be in wastewater based on process engineering and similar reference plants.

ANALYSIS RESULTS TABLE
POLLUTANT GROUP 7

Please read instructions carefully before completing this form.

APPLICANT NAME	Shell Chemical Appalachia LLC

☒ **Outfall / IMP Number 001** (Show location of sampling point on Line Drawing)
☐ Treatment Facility Influent Sampling Results (Show location of sampling point on Line Drawing)
☐ Intake Sampling Results (Specify Source: _____)
☐ Background (Upstream) Sampling Results (Specify Location: _____)
☒ New Discharge (Basis for Information: **Engineering Estimate**)

POLLUTANT GROUP 7 PARAMETERS	CONCENTRATION / MASS PRESENT						No. Analyses	No. "Non-Detect" Results	QL Used	Method Used
	Min/Max Daily Value		Max Avg Monthly Value		Long-Term Avg Value					
	Conc	Mass (lbs/day)	Conc	Mass (lbs/day)	Conc	Mass (lbs/day)				

Group 7 pollutants not expected to be in wastewater based on process engineering and similar reference plants.

ANALYSIS RESULTS TABLE
POLLUTANT GROUP 1

Please read instructions carefully before completing this form.

APPLICANT NAME	Shell Chemical Appalachia LLC

☒ **Outfall / IMP Number 101** (Show location of sampling point on Line Drawing)
☐ Treatment Facility Influent Sampling Results (Show location of sampling point on Line Drawing)
☐ Intake Sampling Results (Specify Source: _____)
☐ Background (Upstream) Sampling Results (Specify Location: _____)
☒ New Discharge (Basis for Information: **Engineering Estimate**)

POLLUTANT GROUP 1 PARAMETERS	CONCENTRATION / MASS PRESENT						No. Analyses	No. "Non-Detect" Results	QL Used	Method Used
	Min/Max Daily Value		Max Avg Monthly Value		Long-Term Avg Value					
	Conc	Mass (lbs/day)	Conc	Mass (lbs/day)	Conc	Mass (lbs/day)				
BOD_5 (mg/L)	47	501	23	250						
COD (mg/L)	141	1,502	105	1,126						
TOC (mg/L)	31	331	16	165						
TSS (mg/L)	71	761	36	380						
Ammonia-Nitrogen (mg/L)	5.4	38.6	2.7	19.3						
Temperature (Winter) (°F)	70	XXX	70	XXX		XXX		XXX	XXX	
Temperature (Summer) (°F)	91	XXX	91	XXX		XXX		XXX	XXX	
pH – Minimum (S.U.)	6	XXX	XXX	XXX		XXX		XXX	XXX	
pH – Maximum (S.U.)	9	XXX	XXX	XXX		XXX		XXX	XXX	
Fecal Coliform (No./100 mL)	NA	XXX	NA	XXX		XXX			XXX	
Oil and Grease (mg/L)	19	200	9	100						
TRC (mg/L)	NA	XXX	NA	XXX		XXX				
Total Phosphorus (mg/L)	0.1	0.4	0.03	0.2						
TKN (mg/L)	0.2	1.4	0.1	0.7						
Nitrite + Nitrate-Nitrogen (mg/L)	0.8	5.7	0.4	2.8						
Total Dissolved Solids (mg/L)	7,375	50,078	7,375	50,078						
Color (Pt-Co Units)	NA	XXX	NA	XXX		XXX				
Bromide (mg/L)	NA	NA	NA	NA						
Chloride (mg/L)	107	764	53.5	382						
Sulfate (mg/L)	786	5,619	393	2,809						
Sulfide (mg/L)	0.3	2.4	0.2	1.2						
Surfactants (mg/L)	NA	NA	NA	NA						
Fluoride (mg/L)	0.9	6.4	0.4	3.2						
Total Hardness (mg/L)	232	1,659	116	829						

ANALYSIS RESULTS TABLE
POLLUTANT GROUP 2

Please read instructions carefully before completing this form.

APPLICANT NAME	Shell Chemical Appalachia LLC

☒ **Outfall / IMP Number 101** (Show location of sampling point on Line Drawing)
☐ Treatment Facility Influent Sampling Results (Show location of sampling point on Line Drawing)
☐ Intake Sampling Results (Specify Source: _____)
☐ Background (Upstream) Sampling Results (Specify Location: _____)
☒ New Discharge (Basis for Information: **Engineering Estimate**)

POLLUTANT GROUP 2 PARAMETERS	CONCENTRATION / MASS PRESENT						No. Analyses	No. "Non-Detect" Results	QL Used	Method Used
	Min/Max Daily Value		Max Avg Monthly Value		Long-Term Avg Value					
	Conc	Mass (lbs/day)	Conc	Mass (lbs/day)	Conc	Mass (lbs/day)				
Aluminum, Total (µg/L)	1,397	10	699	5.0						
Chromium, Total (µg/L)	568	4.1	284	2						
Copper, Total (µg/L)	227	1.6	114	0.8						
Cyanide, Total (µg/L)	227	1.6	114	0.8						
Iron, Total (µg/L)	5,039	36	2,519	18						
Iron, Dissolved (µg/L)	5,039	36	2,519	18						
Manganese, Total (µg/L)	568	4	284	2.0						
Nickel, Total (µg/L)	57	0.4	28	0.2						
Phenols, Total (µg/L)	100	0.7	50	0.4						

2. Group 2 pollutants not listed above are not expected to be in wastewater based on process engineering and similar reference plants.

ANALYSIS RESULTS TABLE
POLLUTANT GROUP 3

Please read instructions carefully before completing this form.

APPLICANT NAME	Shell Chemical Appalachia LLC

☒ **Outfall / IMP Number 101** (Show location of sampling point on Line Drawing)
☐ Treatment Facility Influent Sampling Results (Show location of sampling point on Line Drawing)
☐ Intake Sampling Results (Specify Source: _____)
☐ Background (Upstream) Sampling Results (Specify Location: _____)
☒ New Discharge (Basis for Information:) **Engineering Estimate**

POLLUTANT GROUP 3 PARAMETERS	CONCENTRATION / MASS PRESENT						No. Analyses	No. "Non-Detect" Results	QL Used	Method Used
	Min/Max Daily Value		Max Avg Monthly Value		Long-Term Avg Value					
	Conc	Mass (lbs/day)	Conc	Mass (lbs/day)	Conc	Mass (lbs/day)				
Benzene (µg/L)	501	3.6	251	1.8						
Ethylbenzene (µg/L)	200	1.4	100	0.7						
Toluene (µg/L)	251	1.8	125	0.9						

2. Group 3 pollutants not listed above are not expected to be in wastewater based on process engineering and similar reference plants.

ANALYSIS RESULTS TABLE
POLLUTANT GROUP 4

Please read instructions carefully before completing this form.

APPLICANT NAME	Shell Chemical Appalachia LLC

☒ **Outfall / IMP Number 101** (Show location of sampling point on Line Drawing)
☐ Treatment Facility Influent Sampling Results (Show location of sampling point on Line Drawing)
☐ Intake Sampling Results (Specify Source: _____)
☐ Background (Upstream) Sampling Results (Specify Location: _____)
☒ New Discharge (Basis for Information: **Engineering Estimate**)

POLLUTANT GROUP 4 PARAMETERS	CONCENTRATION / MASS PRESENT						No. Analyses	No. "Non-Detect" Results	QL Used	Method Used
	Min/Max Daily Value		Max Avg Monthly Value		Long-Term Avg Value					
	Conc	Mass (lbs/day)	Conc	Mass (lbs/day)	Conc	Mass (lbs/day)				
2-Chlorophenol (µg/L)	***Group 4 pollutants not expected to be in wastewater based on process engineering and similar reference plants***									
2,4-Dichlorophenol (µg/L)										
2,4-Dimethylphenol (µg/L)										
4,6-Dinitro-o-Cresol (µg/L)										
2,4-Dinitrophenol (µg/L)										
2-Nitrophenol (µg/L)										
4-Nitrophenol (µg/L)										
P-Chloro-m-Cresol (µg/L)										
Pentachlorophenol (µg/L)										
Phenol (µg/L)										
2,4,6-Trichlorophenol (µg/L)										

ANALYSIS RESULTS TABLE
POLLUTANT GROUP 5

Please read instructions carefully before completing this form.

APPLICANT NAME	Shell Chemical Appalachia LLC

☒ **Outfall / IMP Number 101** (Show location of sampling point on Line Drawing)
☐ Treatment Facility Influent Sampling Results (Show location of sampling point on Line Drawing)
☐ Intake Sampling Results (Specify Source: _____)
☐ Background (Upstream) Sampling Results (Specify Location: _____)
☒ New Discharge (Basis for Information: **Engineering Estimate**)

POLLUTANT GROUP 5 PARAMETERS	CONCENTRATION / MASS PRESENT						No. Analyses	No. "Non-Detect" Results	QL Used	Method Used
	Min/Max Daily Value		Max Avg Monthly Value		Long-Term Avg Value					
	Conc	Mass (lbs/day)	Conc	Mass (lbs/day)	Conc	Mass (lbs/day)				
Acenaphthene (µg/L)	200	1.4	100	0.7						
Acenaphthylene (µg/L)	200	1.4	100	0.7						
Anthracene (µg/L)	200	1.4	100	0.7						
Benzo(*a*)Anthracene (µg/L)	10	0.07	1.2	0.04						
Benzo(*a*)Pyrene (µg/L)	10	0.07	1.2	0.04						
3,4-Benzo-fluoranthene (µg/L)	10	0.07	1.2	0.04						
Fluorene (µg/L)	200	1.4	100	0.7						

2. ***Group 5 pollutants not listed above are not expected to be in wastewater based on process engineering and similar reference plants.***

ANALYSIS RESULTS TABLE
POLLUTANT GROUP 6

Please read instructions carefully before completing this form.

APPLICANT NAME	Shell Chemical Appalachia LLC

☒ **Outfall / IMP Number 101** (Show location of sampling point on Line Drawing)
☐ Treatment Facility Influent Sampling Results (Show location of sampling point on Line Drawing)
☐ Intake Sampling Results (Specify Source: _____)
☐ Background (Upstream) Sampling Results (Specify Location: _____)
☒ New Discharge (Basis for Information: **Engineering Estimate**)

POLLUTANT GROUP 6 PARAMETERS	CONCENTRATION / MASS PRESENT						No. Analyses	No. "Non-Detect" Results	QL Used	Method Used
	Min/Max Daily Value		Max Avg Monthly Value		Long-Term Avg Value					
	Conc	Mass (lbs/day)	Conc	Mass (lbs/day)	Conc	Mass (lbs/day)				

Group 6 pollutants not expected to be in wastewater based on process engineering and similar reference plants.

ANALYSIS RESULTS TABLE
POLLUTANT GROUP 7

Please read instructions carefully before completing this form.

APPLICANT NAME	Shell Chemical Appalachia LLC

☒ **Outfall / IMP Number 101** (Show location of sampling point on Line Drawing)
☐ Treatment Facility Influent Sampling Results (Show location of sampling point on Line Drawing)
☐ Intake Sampling Results (Specify Source: _____)
☐ Background (Upstream) Sampling Results (Specify Location: _____)
☒ New Discharge (Basis for Information: **Engineering Estimate**)

POLLUTANT GROUP 7 PARAMETERS	CONCENTRATION / MASS PRESENT						No. Analyses	No. "Non-Detect" Results	QL Used	Method Used
	Min/Max Daily Value		Max Avg Monthly Value		Long-Term Avg Value					
	Conc	Mass (lbs/day)	Conc	Mass (lbs/day)	Conc	Mass (lbs/day)				

Group 7 pollutants not expected to be in wastewater based on process engineering and similar reference plants.

Applicant Name:

ANALYSIS RESULTS TABLE

Hydrotest is closed system so analysis is for pollutants in permit

Please read instructions carefully before completing this form.

Shell Chemical Appalachia LLC

☒ **Outfall / IMP Number 108** (Show location of sampling point on Line Drawing)
☐ Treatment Facility Influent Sampling Results (Show location of sampling point on Line Drawing)
☐ Intake Sampling Results (Specify Source: _____)
☐ Background (Upstream) Sampling Results (Specify Location: _____)
☐ New Discharge (Basis for Information:)

POLLUTANT GROUP 1 PARAMETERS	CONCENTRATION / MASS PRESENT						No. Analyses	No. "Non-Detect" Results	QL Used	Method Used
	Min/Max Daily Value		Max Avg Monthly Value		Long-Term Avg Value					
	Conc	Mass (lbs/day)	Conc	Mass (lbs/day)	Conc	Mass (lbs/day)				
Benzene (mg/L)	0.0044	0.0013	0.0027	0.0015	0.0012	0.0004	12	11	0.000596	624_25ml
BTEX (mg/L)	0.0070	0.0053	0.0069	0.0037	0.0032	0.0012	12	7	0.00400	624_25ml
TSS (mg/L)	8.8000	1.3211	2.6833	1.3211	1.9167	0.4381	12	2	0.500	2540D
pH – Minimum (S.U.)	6.72		8.20		7.86		12		XXX	
pH – Maximum (S.U.)	8.40		8.40				12		XXX	
Oil and Grease (mg/L)	5.8000	3.5278	5.5000	2.5014	4.3333	1.2734	12	11	1.40	1664B
TRC (mg/L)	0.6600		0.2417		0.1526		12	3	0.0300	SM4500Cl G
Dissolved Iron (mg/L)	4.0000	1.5612	1.3000	1.5612	0.7524	0.1867	12	0	0.0248	200.7

Applicant Name:

OTHER TOXIC POLLUANTS AND HAZARDOUS SUBSTANCES TABLE

Other Pollutants Which Must Be Identified If Known Or Expected To Be Present in Discharges

Please read instructions carefully before completing this form

Outfall No.	Chemical Substance or Compound	Reason for Presence in Discharge	Avg Effluent Concentration (µg/L)	Max Effluent Concentration (µg/L)	No. of Analyses	Quantitation Limit (µg/L)
001	Acetaldehyde	Present in Process wastewater	100	100		
001	Acetic Acid	Present in Process wastewater	100	100		
001	Formaldehyde	Present in Process wastewater	400	200		
001	Formic Acid	Present in Process wastewater	100	100		
001	Propionic Acid	Present in Process wastewater	100	100		
001	Sodium	Present in Process wastewater	290,000	145,000		
001	Styrene	Present in Process wastewater	10	10		
001	Xylene	Present in Process wastewater	200	100		

Is the applicant requesting a hazardous substance spill reporting requirement exemption for any of the substances listed in Attachment A, Table 3 of the instructions?

☐ Yes ☐ No (If Yes, attach the information specified in the instructions).

Applicant Name:

CERTIFICATION AND SIGNATURE OF APPLICANT

I certify under penalty of law that this document and all attachments and modules were prepared under my direction or supervision in accordance with a system designed to assure that qualified personnel properly gathered and evaluated the information submitted. Based on my inquiry of the person or persons who manage the system, or those persons directly responsible for gathering the information, the information submitted is, to the best of my knowledge and belief, true, accurate, and complete. I am aware that there are significant penalties for submitting false information, including the possibility of fine and imprisonment for knowing violations. See 18 Pa. C.S. § 4904 (relating to unsworn falsification).

H. James Sewell	Attorney-in-Fact
Name (Type or Print Legibly)	**Official Title**
	9/10/19
Signature	**Date**

(Use corporate or professional seal as appropriate.)

COMMONWEALTH OF PENNSYLVANIA
DEPARTMENT OF ENVIRONMENTAL PROTECTION
BUREAU OF CLEAN WATER

NATIONAL POLLUTANT DISCHARGE ELIMINATION SYSTEM APPLICATION FOR INDIVIDUAL PERMIT TO DISCHARGE INDUSTRIAL WASTEWATER

MODULE 1 – STORMWATER

1. **Applicant/Operator Name:**	**Shell Chemical Appalachia LLC**				
2. List all outfalls receiving stormwater in whole or in part and provide the requested information.					
Outfall No.	Entirely Stormwater?	Drainage Area (ft^2)	% Impervious	Description of Materials/Activities in Drainage Area Exposed to Precipitation	No Exposure?
001	☐	1,515,888	100	Process Area Pads (AC Pond)	☐
002	☒	1,028,016	100	Ohio River (East RR Pond)	☐
003	☒	NA	NA	Ohio River (East RR Pond Overflow)	☐
004	☒	NA	100	Poorhouse Run (AC Pond Overflow)	☐
006	☒	3,576,276	100	Poorhouse Run (South Ponds)	☐
007	☒	NA	NA	Poorhouse Run (South Pond Overflow)	☐
008	☒	3,798,432	100	Poorhouse Run (CR Pond)	☐
009	☒	NA	NA	Poorhouse Run (CR Pond Overflow)	☐
010	☒	165,528	100	Poorhouse Run (West RR Basin)	☐
012	☒	NA	NA	Poorhouse Run (West Basin Overflow)	☐
013	☒	4,578,156	100	Ohio River (North Pond)	☐
014	☒	NA	NA	Ohio River (North Pond Overflow)	☐
016	☒	374,180	3.80	Ohio River (Storm water from plant and both Duquesne and PennDOT rights-of-ways)	☐
021	☒	1,128,204	10	Poorhouse Run (Storm water runoff Electric Tower Rd)	☐
017	☒	458,687	100	Storm water runoff WWTP area	☐
018	☒	625,957	100	Parking Area Pond A West	☐
019	☒	NA	NA	Parking Area Pond A West Overflow	☐
020	☒	614,196	100	Parking Area Pond B East	☐
022	☒	NA	NA	Parking Area Pond B East Overflow	☐
023	☒	933,491	40	Training Center (Former PGT area)	☐

3. List all outfalls receiving stormwater in the same order as question 2, above, and provide the requested information.

Outfall No.	Sampling Completed?	Representative Outfall No.	Treatment?	Description of BMPs in Drainage Area to Control Pollutants in Stormwater	PCSM?
001	☐	Currently not in Service	☒	Dry extended basin and segregation of AC areas	☒
002	☒		☐	Dry extended basin and segregation of AC areas	☒
003	☒		☐	Dry extended basin and segregation of AC areas	☒
004	☐	Currently not in Service	☐	Dry extended basin and segregation of AC areas	☒
006	☒		☐	Dry extended basin and segregation of AC areas	☒
007	☐	003 and 014	☐	Dry extended basin and segregation of AC areas	☒
008	☒		☐	Dry extended basin and segregation of AC areas	☒
009	☐	003 and 014	☐	Dry extended basin and segregation of AC areas	☒
010	☒		☐	Dry extended basin and segregation of AC areas	☒
012	☐	003 and 014	☐	Dry extended basin and segregation of AC areas	☒
013	☒		☐	Dry extended basin and segregation of AC areas	☒
014	☒		☐	Dry extended basin and segregation of AC areas	☒
016	☒		☐	Rock check dams and visual inspections	☒
021	☒		☐	Silt socks and visual inspections	☒
017	☐	Does not Exist	☐	Visual inspections	☒
018	☐	002,006,010 and 013	☐	Dry extended basin	☒
019	☐	003 and 014	☐	Dry extended basin	☒
020	☐	002,006,010 and 013	☐	Dry extended basin	☒
022	☐	003 and 014	☐	Dry extended basin	☒
023	☐	021	☐	Visual inspections	☐

4. All non-stormwater discharges from these outfall(s) are identified in the Discharge Information section of the application?

☒ Yes ☐ No ☐ There are no non-stormwater discharges associated with these outfalls (If No, attach an explanation)

5. If there have been leaks or spills on-site within the past five years that have reached stormwater outfall(s), identify the outfall(s) receiving the leaks or spills, the substance(s) released, measures taken to remediate the incident(s) and preventative measure(s) taken to reduce the possibility of future incidents. Attach additional sheets as necessary.

No leaks or spills have occurred on-site within the past five years that have reached stormwater outfall

6. Describe how often stormwater outfalls are inspected and routine maintenance performed, if not identified in question 3.

For Construction Phase visual site inspections are conducted bi-weekly and after each precipitation event and maintenance performed as needed based on inspections to maintain integrity of system. PPC plan is being developed for operational phase and that plan will address stormwater outfall management per permit conditions and good engineering practices.

STORMWATER SAMPLING RESULTS

Complete the following tables for each stormwater outfall sampled for analysis.

OUTFALL NO.:	**002, 004, 006, 008, 010, 013 (storm pond main outlets) and representative of outfalls 018 and 020**

1. You must provide the results of at least one analysis for every pollutant identified in the table below.

Pollutant	Average Concentration		Maximum Concentration		No. Storm Events Sampled	Quantitation Limit
	Grab Sample	Flow-Weighted Composite Sample	Grab Sample	Flow-Weighted Composite Sample		
Oil and Grease (mg/L)	ND		ND		1	1.4
BOD5 (mg/L)	ND		ND		1	2.0
COD (mg/L)	12.46		23.00		9	9.05
TSS (mg/L)	62.59		240.00		12	0.5
Total Nitrogen (mg/L)	1.10		2.20		11	0.031
Total Phosphorus (mg/L)	0.13		0.25		9	0.037
pH (S.U.)	Min: 6.52	Max: 8.97	Min: 6.97	Max: 8.97	57	XXX

2. List all pollutants contained within an Effluent Limitation Guideline (ELG) that is applicable to the facility's production. Also list all pollutants listed in the facility's existing NPDES permit for the outfall identified above; process wastewater discharges; and any other pollutants that are considered the cause of impairment to waters receiving stormwater discharges from the outfall. Provide the results of at least one analysis for every pollutant listed. Specify the units with your results (e.g., mg/L).

Pollutant	Average Concentration		Maximum Concentration		No. Storm Events Sampled	Quantitation Limit
	Grab Sample	Flow-Weighted Composite Sample	Grab Sample	Flow-Weighted Composite Sample		
Fluoride (mg/L)	0.13		0.13		2	0.0263
Total Aluminum (mg/L)	1.01		5.30		11	0.0121
Total Arsenic (mg/L)	0.01		0.01		1	0.000174
Total Cadmium (mg/L)	0.01		0.01		1	0.00021
Total Chromium (mg/L)	0.002		0.002		1	0.0036
Total Copper (mg/L)	0.03		0.03		1	0.0009
Total Iron (mg/L)	1.25		5.30		11	0.0153
Total Lead (mg/L)	0.01		0.01		11	0.000157
Total Mercury (mg/L)	0.0002		0.0005		11	0.000101
Total Nickel (mg/L)	0.004		0.004		1	0.000457
Total Selenium(mg/L)	0.01		0.02		11	0.000807
Total Thallium (mg/L)	0.02		0.02		11	0.00012
Total Zinc (mg/L)	0.08		0.18		11	0.00224

OUTFALL NO.:	003 and 014 (Overflow) and representative of outfalls 007, 009, 012, 019 and 022					
You must provide the results of at least one analysis for every pollutant identified in the table below.						
Pollutant	Average Concentration		Maximum Concentration		No. Storm Events Sampled	Quantitation Limit
	Grab Sample	Flow-Weighted Composite Sample	Grab Sample	Flow-Weighted Composite Sample		
Oil and Grease (mg/L)						
BOD5 (mg/L)						
COD (mg/L)	12.50		15.00		2	9.05
TSS (mg/L)	73.50		124.00		3	0.5
Total Nitrogen (mg/L)	0.95		1.10		2	0.031
Total Phosphorus (mg/L)	0.14		0.17		2	0.037
pH (S.U.)	Min: 8.12	Max: 8.14	Min: 8.12	Max: 8.18	2	XXX

List all pollutants contained within an Effluent Limitation Guideline (ELG) that is applicable to the facility's production. Also list all pollutants listed in the facility's existing NPDES permit for the outfall identified above; process wastewater discharges; and any other pollutants that are considered the cause of impairment to waters receiving stormwater discharges from the outfall. Provide the results of at least one analysis for every pollutant listed. Specify the units with your results (e.g., mg/L).

Pollutant	Average Concentration		Maximum Concentration		No. Storm Events Sampled	Quantitation Limit
	Grab Sample	Flow-Weighted Composite Sample	Grab Sample	Flow-Weighted Composite Sample		
Total Aluminum (mg/L)	1.55		2.20		2	0.0121
Total Iron(mg/L)	2.40		3.50		2	0.0153
Total Lead (mg/L)	0.01		0.02		2	0.000157
Total Mercury (mg/L)	0.00		0.00		2	0.000101
Total Selenium (mg/L)	0.01		0.01		2	0.000807
Total Thallium (mg/L)	0.02		0.02		2	0.00012
Total Zinc (mg/L)	0.14		0.22		2	0.00224

OUTFALL NO.:	016

You must provide the results of at least one analysis for every pollutant identified in the table below.

Pollutant	Average Concentration		Maximum Concentration		No. Storm Events Sampled	Quantitation Limit
	Grab Sample	Flow-Weighted Composite Sample	Grab Sample	Flow-Weighted Composite Sample		
Oil and Grease (mg/L)						
BOD5 (mg/L)						
COD (mg/L)	9.55		10.00		2	9.05
TSS (mg/L)	785.00		1400.00		2	0.5
Total Nitrogen (mg/L)	0.10		0.16		2	0.031
Total Phosphorus (mg/L)	1.01		1.90		2	0.037
pH (S.U.)	Min: 7.68	Max: 8.00	Min: 7.68	Max: 8.00	2	XXX

List all pollutants contained within an Effluent Limitation Guideline (ELG) that is applicable to the facility's production. Also list all pollutants listed in the facility's existing NPDES permit for the outfall identified above; process wastewater discharges; and any other pollutants that are considered the cause of impairment to waters receiving stormwater discharges from the outfall. Provide the results of at least one analysis for every pollutant listed. Specify the units with your results (e.g., mg/L).

Pollutant	Average Concentration		Maximum Concentration		No. Storm Events Sampled	Quantitation Limit
	Grab Sample	Flow-Weighted Composite Sample	Grab Sample	Flow-Weighted Composite Sample		
Total Aluminum (mg/L)	9.70		14.00		2	0.0121
Total Iron(mg/L)	21.05		36.00		2	0.0153
Total Lead (mg/L)	0.07		0.12		2	0.000157
Total Mercury (mg/L)	0.002		0.003		2	0.000101
Total Selenium (mg/L)	0.01		0.01		2	0.000807
Total Thallium (mg/L)	0.02		0.02		2	0.00012
Total Zinc (mg/L)	1.24		2.20		2	0.00224

OUTFALL NO.:	021 and representative of outfall 023

You must provide the results of at least one analysis for every pollutant identified in the table below.

Pollutant	Average Concentration		Maximum Concentration		No. Storm Events Sampled	Quantitation Limit
	Grab Sample	Flow-Weighted Composite Sample	Grab Sample	Flow-Weighted Composite Sample		
Oil and Grease (mg/L)						
BOD5 (mg/L)						
COD (mg/L)						
TSS (mg/L)	15.40		40.00		3	0.5
Total Nitrogen (mg/L)						
Total Phosphorus (mg/L)						
pH (S.U.)						XXX

List all pollutants contained within an Effluent Limitation Guideline (ELG) that is applicable to the facility's production. Also list all pollutants listed in the facility's existing NPDES permit for the outfall identified above; process wastewater discharges; and any other pollutants that are considered the cause of impairment to waters receiving stormwater discharges from the outfall. Provide the results of at least one analysis for every pollutant listed. Specify the units with your results (e.g., mg/L).

Pollutant	Average Concentration		Maximum Concentration		No. Storm Events Sampled	Quantitation Limit
	Grab Sample	Flow-Weighted Composite Sample	Grab Sample	Flow-Weighted Composite Sample		
Total Aluminum (mg/L)	0.27		0.64		3	0.0121
Total Iron (Mg/L)	0.44		1.00		3	0.0153
Total Zinc (mg/L)	0.10		0.12		3	0.00224

1. **Based on above data obtained from outfall 021, it is similar (even lower) than that for main stormwater ponds (002, 004, 006, 010, and 013). Therefor data presented for those ponds is representative of all other parameters.**

OUTFALL NO.:	

3. List all pollutants contained in Pollutant Groups 1 through 7, as identified in the Analysis Results Tables of the industrial wastewater application (3800-PM-BCW0008b), which are not identified in questions 1 or 2 of the Stormwater Sampling Results section, but the applicant knows or has reason to believe are present in the stormwater discharge.

Pollutant	Average Concentration		Maximum Concentration		No. Storm Events Sampled	Quantitation Limit
	Grab Sample	Flow-Weighted Composite Sample	Grab Sample	Flow-Weighted Composite Sample		
Applicant has no reason to believe any other pollutants than those reported are present in the stormwater discharges.						

4. Provide the information requested below for the storm event(s) that resulted in the maximum values reported in questions 1, 2 and 3 for the flow-weighted composite sample.

Storm Event Date	Duration of Storm Event (Min)	Total Rainfall During Storm Event (In)	No. Hours Since End of Previous Measurable Storm Event	Maximum Flow Rate During Storm Event (GPM)	Volume of Stormwater at Outfall from Storm Event
All samples were "grab" samples					

pennsylvania
DEPARTMENT OF ENVIRONMENTAL PROTECTION

COMMONWEALTH OF PENNSYLVANIA
DEPARTMENT OF ENVIRONMENTAL PROTECTION
BUREAU OF CLEAN WATER

NATIONAL POLLUTANT DISCHARGE ELIMINATION SYSTEM APPLICATION FOR INDIVIDUAL PERMIT TO DISCHARGE INDUSTRIAL WASTEWATER

MODULE 5 – COOLING WATER INTAKE STRUCTURE

New Facilities
NOT Applicable - Existing

1. Identify the Track chosen to comply with 316(b) requirements:
   - ☐ Track I – 40 CFR 125.84(b) (facilities that withdraw greater than or equal to 10 MGD)
   - ☐ Track I – 40 CFR 125.84(c) (facilities that withdraw greater than 2 MGD and less than 10 MGD)
   - ☐ Track II – 40 CFR 125.84(d) (comparable to Track I)

2. Provide a narrative description of the system that has been designed to reduce intake flow to a level commensurate with that that can be attained by a closed-cycle recirculating cooling water system and any engineering calculations, including documentation that make-up and blowdown flows have been minimized.

3. If the flow reduction requirement is met entirely, or in part, by reusing or recycling water withdrawn for cooling purposes in subsequent industrial processes, provide documentation that the amount of cooling water that is not reused or recycled has been minimized.

4. Provide a narrative description of the design, structure, equipment and operation used to meet the maximum through-screen design intake velocity requirement of no more than 0.5 fps.

5. Provide design calculations showing that the velocity requirement will be met at minimum ambient source water surface elevations and maximum head loss across the screens or other device.

6. Track I – Attach a Design and Construction Technology Plan. Attached: ☐ Yes ☐ No

7. Flow Requirements – Report the annual mean flow, mean low water tidal excursion distance, or a narrative description of the water body thermal stratification, with supporting documentation and engineering calculations, as applicable (see instructions).

8. Track II – Attach a Comprehensive Demonstration Study. Attached: ☐ Yes ☐ No

Source Water Physical Data

1. List the name(s) of the water body(ies) from which cooling water is or will be withdrawn.

   Ohio River

2. Provide a narrative description of the physical configuration of all source water bodies and attach scaled drawings.

   The existing intake is located within the Montgomery Pool of the Ohio River. Along the section of the Ohio River the river height and flow are controlled by numerous upstream structures, but pool level is mainly controlled by two USACE-operated Lock and Dams: Dashields (upstream) and Montgomery (downstream). River navigation is managed by several state and federal agencies; however, the USACE – Pittsburgh District oversees operation and maintenance of the Ohio River in Pennsylvania. Upriver discharge is governed by the Dashields Lock and Dam while the Montgomery Lock and Dam governs lower pool elevations and discharge downriver. When the river is at or near its normal pool elevation, the flow rate is approximately 10 thousand cubic feet per second (kcfs) and the flow velocity is approximately 0.3 miles per hour (mph).

3. Identify and characterize the source water body's hydrological and geomorphological features and methods used to determine the intake's area of influence and results of such studies.

   The Ohio River is approximately 1,300 feet wide with a maintained average depth of 10 to 15 feet in the area of the existing intake structure.

4. Attach locational maps showing the source waters. Attached: ☒ Yes ☐ No

Cooling Water Intake Structure Data

1. Provide a narrative description of the configuration of each CWIS and where it is located in the water body and in the water column.

   One (1) Shoreline submerged intake structure on the Ohio River is used. It includes two (2) travelling water screens each with a stop log and manual bar screen. The structure is configured to provide 8 ft. of submergence at low river water level and 12 ft. at normal water level.

2. Provide the latitude and longitude for each CWIS.

CWIS ID No.	Latitude			Longitude		
	DEG	MIN	SEC	DEG	MIN	SEC
1	**40**	**40**	**4.57**	**80**	**20**	**47.34**

3. Provide a narrative description of the operation of each CWIS, including design intake flows, daily hours of operation, number of days per year in operation, and seasonal changes, if applicable.

   Intake flow is expected to be in the range 18 to 21 MGD. Daily hours of operation is 24 hours and CWIS will operate 365 days a year

4. Attach to Module 5 a flow distribution and water balance diagram that includes all sources of water to the facility, recirculating flows, and discharges. Attached: ☒ Yes ☐ No

5. Attach to Module 5 engineering drawings of the CWISs. Attached: ☒ Yes ☐ No

Source Water Baseline Biological Characterization Data

1. Identify all data requested by 40 CFR 122.41(r)(4)(ii) through (vi) that are not available and efforts made to identify sources of the data.

   A Baseline Biological Assessment Report "SOURCE WATER PHYSICAL AND BIOLOGICAL BASELINE CHARACTERIZATION STUDY – MONTGOMERY POOL, OHIO RIVER" dated November 2015 was submitted with original application

2. Report species (or relevant taxa) for all life stages and their relative abundance in the vicinity of the CWISs.

   See Baseline Biological Assessment Report

3. Identify the species and life stages that would be most susceptible to impingement and entrainment.

   See Baseline Biological Assessment Report

4. Identify and evaluate the primary period of reproduction, larval recruitment, and period of peak abundance for relevant taxa.

   See Baseline Biological Assessment Report

5. Report data representative of the seasonal and daily activities of biological organisms in the vicinity of the CWISs.

   See Baseline Biological Assessment Report

6. Identify all threatened, endangered and other protected species that might be susceptible to impingement and entrainment and the CWISs.

   See Baseline Biological Assessment Report

7. Document any public participation or consultation with federal or state agencies in development of the plan.

   See Baseline Biological Assessment Report

8. For owners or operators of existing facilities only, identify protective measures and stabilization activities that have been implemented, and a description of how these measures and activities affected the baseline water condition in the vicinity of the intake.

Historically the only activity conducted in the vicinity of the intake has been periodic maintenance dredging (per Horsehead Permit E04-250). Also, the design capacity of the intake is 80 MGD which is only 0.3% of the annual mean flow of the Ohio River (approximately 25,530 MGD based on 30 yr. avg.) in the vicinity of the plant.

Neither of these activities had any material effect on the baseline water condition in the vicinity of the intake.

9. For owners or operators of existing facilities, provide a list of fragile species at the facility as defined in 40 CFR 125.92(m).

   See Baseline Biological Assessment Report

10. Identify all federally listed species and designated critical habitat in the vicinity of the CWIS.

    See Baseline Biological Assessment Report

Cooling Water System Data

1. Provide a narrative description of the operation of the cooling water system and its relationship to CWISs.

   Pumps in CWIS are operated to pump raw river water to a water treatment plant. Treated water is pumped to two open recirculating cooling water towers. Towers are counter-flow mechanical draft towers that supply the cooling water to process units and the cogeneration power plant (users). Cooling water is returned to cooling towers from the users, cooled and cooled water is pumped back to users.

2. Identify the number of days per year the cooling water system is in operation and seasonal changes in the operation of the system, if applicable.

   Cooling water system is operated 365 days a year.

3. Report the proportion of design intake flow for contact cooling, non-contact cooling and process uses.

   Contact Cooling: **0%** Non-Contact Cooling: **87%** Process: **13%**

4. Describe water reuse, if applicable, including cooling water reused as process water, process water reused for cooling, and the use of gray water for cooling.

   Provisions are made to use cooling water blowdown for freeze protection of wastewater equalization tanks and to provide micronutrients for wastewater biological treatment plant

5. Describe reductions in total water withdrawals including cooling water intake flow reductions already achieved through minimized process water withdrawals.

   Water demand is reduced by using closed loop non-contact cooling and six cycles of concentration for the cooling towers. Steam condensate is recycled and mixed with demin water and returned to steam plant. Flow to the water treatment plant is controlled based on water demand to avoid excessive withdrawal.

6. Identify and describe any cooling water that is used in a manufacturing process either before or after it is used for cooling, including other recycled process water flows.

   Provisions are made to use cooling water blowdown for freeze protection of wastewater equalization tanks and to provide micronutrients for wastewater biological treatment plant.

7. Report the proportion of the source water body withdrawn, on a monthly basis.

   Less than 0.6% at lowest monthly flow as shown in Table 6 of attached biological report

8. Provide (or attach to Module 5) all design and engineering calculations prepared by a qualified professional and data to support responses to questions 1 through 7 in this section. Attached: ☒ Yes ☐ No

   Refer to attached Water Balance

9. Describe existing impingement and entrainment technologies or operational measures and a summary of their performance.

   Travelling water screens are of fish handling design. Each screen is provided with spray cleaning system with an upper fish trough and lower debris trough. From each discharge point, means to convey the aquatic organisms and debris separately to discharge locations located downstream of intake structure is provided.

Chosen Method(s) of Compliance with Impingement Mortality Standard

1. Check the appropriate box to indicate which method(s) have been selected to comply with the impingement mortality standard. Also check the appropriate box on the right to indicate whether this method applies to the facility as a whole or to a specific CWIS. If it applies to a specific CWIS, provide the ID No.

☒ 40 CFR 125.94(c)(1) – Closed-Cycle Recirculating System	☒ Facility	☐ CWIS ID:
☐ 40 CFR 125.94(c)(2) – 0.5 Feet Per Second Through-Screen Design Velocity	☐ Facility	☐ CWIS ID:
☐ 40 CFR 125.94(c)(3) – 0.5 Feet Per Second Through-Screen Actual Velocity	☐ Facility	☐ CWIS ID:
☐ 40 CFR 125.94(c)(4) – Existing Offshore Velocity Cap	☐ Facility	☐ CWIS ID:
☐ 40 CFR 125.94(c)(5) – Modified Traveling Screens	☐ Facility	☐ CWIS ID:
☐ 40 CFR 125.94(c)(6) – Systems of Technologies as the BTA for Impingement Mortality	☐ Facility	☐ CWIS ID:
☐ 40 CFR 125.94(c)(7) – Impingement Mortality Performance Standard	☐ Facility	☐ CWIS ID:

If options 125.94(c)(5) or 125.94(c)(6) are selected, attach an Impingement Technology Performance Optimization Study.
Attached: ☐ Yes ☒ No

2. If a BTA determination for impingement mortality under 40 CFR 125.94(c)(11) or (12), check the appropriate box and attach supporting documentation to Module 5.

☐ 40 CFR 125.94(c)(11) ☐ 40 CFR 125.94(c)(12) ☒ Not Applicable

Entrainment Performance Studies

Attach to Module 5 any previously conducted studies or studies obtained from other facilities addressing technology efficacy, through-facility entrainment survival, and other entrainment studies. See instructions.

Attached: ☐ Yes ☒ No

Operational Status

1. For power production or steam generation, describe each individual unit operating status, including age of each unit, capacity utilization rate for the previous 5 years, and any major upgrades completed within the past 15 years. See instructions.

NOT APPLICABLE – Cogeneration unit will be new unit

2. Describe completed, approved or scheduled uprates and Nuclear Regulatory Commission relicensing status of each unit at nuclear facilities.

NOT APPLICABLE

3. For process units using cooling water other than for power production or steam generation, if the applicant intends to use reductions in flow or changes in operations to meet the requirements of 40 CFR 125.95(c), describe individual production processes and product lines, operating status including age of each line, seasonal operation, any major upgrades completed within the last 15 years, and plans or schedules for decommissioning or replacement of process units or production processes and product lines.

NOT APPLICABLE – Process units will be new unit

4. For all manufacturing facilities, describe current and future production schedules.

Production Data is provided in NPDES Application Section for ELG

5. Explain plans or schedules for any new units planned within the next 5 years.

   NOT APPLICABLE

Additional Studies

NOT APPLICABLE – under 125 MGD

1. Check the appropriate boxes to indicate whether required studies for existing facilities withdrawing greater than 125 MGD (annual intake flow) are attached to Module 5.

   ☐ 40 CFR 122.21(r)(9) – Entrainment Characterization Study

   ☐ 40 CFR 122.21(r)(10) – Comprehensive Technical Feasibility and Cost Evaluation Study

   ☐ 40 CFR 122.21(r)(11) – Benefits Valuation Study

   ☐ 40 CFR 122.21(r)(12) – Non-Water Quality Environmental and Other Impacts Study

2. Is an entrainment reduction technology evaluation for existing facilities withdrawing less than or equal to 125 MGD attached?
   ☐ Yes ☐ No

New Units

Identify the chosen compliance method for all new units at existing facilities. See instructions.

NOT APPLICABLE

3800-FM-BCW0487 10/2017
Instructions

pennsylvania
DEPARTMENT OF ENVIRONMENTAL PROTECTION

COMMONWEALTH OF PENNSYLVANIA
DEPARTMENT OF ENVIRONMENTAL PROTECTION
BUREAU OF CLEAN WATER

CHEMICAL ADDITIVES NOTIFICATION FORM

Use this form to notify the DEP regional office that issued the NPDES permit of the new or increased use of chemical additives that were not reported in the NPDES permit application and are on DEP's Approved List (see www.dep.pa.gov/chemicaladditives). Use one form per chemical additive and discharge point.

Permittee Name:	Shell Chemical Appalachia LLC	**Facility Name:**	Pennsylvania Chemicals Project
Permit No.:	PA0002208 A-2	**Municipality:**	Potter Township
Permit Effective Date:	July 1, 2015	**County:**	Beaver
Permit Expiration Date:	June 30, 2020		

Trade Name of Chemical Additive:	**Nalco 7408**
Manufacturer Name:	**Nalco**
Intended Use(s):	**Chlorine Scavenger**
Location(s) of Use:	**Cooling Tower.**
Frequency of Use:	**Continuous Feed.**
Method of Introduction:	**Auto Feeder**
Treatment Following Introduction:	**No treatment**
Discharge Point (Outfall No.):	**001 via IMP 201**
Design Flow of Discharge (MGD):	**~3.28**
Receiving Water Body Name:	**Ohio River**
Q_{7-10} Flow of Stream (cfs):	**4,730**
Calculated WQBEL (mg/L):	**131,766**
Maximum Usage Rate:	**3,608 (Based on WQBEL)** **Units:** lb/day

Will Other Chemical Additives Be Introduced at the Same Time? ☒ YES ☐ NO If YES, Number: 7

I certify under penalty of law that this document was prepared under my direction or supervision in accordance with a system designed to assure that qualified personnel gather and evaluate the information submitted. Based on my inquiry of the person or persons who manage the system or those persons directly responsible for gathering the information, the information submitted is, to the best of my knowledge and belief, true, accurate and complete. I am aware that there are significant penalties for submitting false information, including the possibility of fine and imprisonment for knowing violations. See 18 Pa. C.S. § 4904 (relating to unsworn falsification).

Name/Title Principal Executive Officer

H. James Sewell

Phone: (724) 709-2411

Date: 9/5/19

Signature of Principal Executive Officer or Authorized Agent

Attorney-in-Fact

3800-FM-BCW0487 10/2017
Instructions

pennsylvania
DEPARTMENT OF ENVIRONMENTAL PROTECTION

COMMONWEALTH OF PENNSYLVANIA
DEPARTMENT OF ENVIRONMENTAL PROTECTION
BUREAU OF CLEAN WATER

CHEMICAL ADDITIVES NOTIFICATION FORM

Use this form to notify the DEP regional office that issued the NPDES permit of the new or increased use of chemical additives that were not reported in the NPDES permit application and are on DEP's Approved List (see www.dep.pa.gov/chemicaladditives). Use one form per chemical additive and discharge point.

Permittee Name:	Shell Chemical Appalachia LLC	**Facility Name:**	Pennsylvania Chemicals Project
Permit No.:	PA0002208 A-2	**Municipality:**	Potter Township
Permit Effective Date:	July 1, 2015	**County:**	Beaver
Permit Expiration Date:	June 30, 2020		

Trade Name of Chemical Additive:	**3DT 396**
Manufacturer Name:	**Nalco**
Intended Use(s):	**Scale inhibitor**
Location(s) of Use:	**Cooling Tower.**
Frequency of Use:	**Continuous**
Method of Introduction:	**Auto Feeder**
Treatment Following Introduction:	**No treatment**
Discharge Point (Outfall No.):	**001 via IMP 201**
Design Flow of Discharge (MGD):	**~3.28**
Receiving Water Body Name:	**Ohio River**
$Q_{7\text{-}10}$ Flow of Stream (cfs):	**4,730**
Calculated WQBEL (mg/L):	**626,032**
Maximum Usage Rate:	**17,142 (Based on WQBEL)** **Units:** lb/day

Will Other Chemical Additives Be Introduced at the Same Time? ☒ YES ☐ NO If YES, Number: **7**

I certify under penalty of law that this document was prepared under my direction or supervision in accordance with a system designed to assure that qualified personnel gather and evaluate the information submitted. Based on my inquiry of the person or persons who manage the system or those persons directly responsible for gathering the information, the information submitted is, to the best of my knowledge and belief, true, accurate and complete. I am aware that there are significant penalties for submitting false information, including the possibility of fine and imprisonment for knowing violations. See 18 Pa. C.S. § 4904 (relating to unsworn falsification).

Name/Title Principal Executive Officer

H. James Sewell

Phone: (724) 709-2411

Date: 9/5/19

Signature of Principal Executive Officer or Authorized Agent

H. J. S.

Attorney-in-Fact

3800-FM-BCW0487 10/2017
Instructions

pennsylvania
DEPARTMENT OF ENVIRONMENTAL PROTECTION

COMMONWEALTH OF PENNSYLVANIA
DEPARTMENT OF ENVIRONMENTAL PROTECTION
BUREAU OF CLEAN WATER

CHEMICAL ADDITIVES NOTIFICATION FORM

Use this form to notify the DEP regional office that issued the NPDES permit of the new or increased use of chemical additives that were not reported in the NPDES permit application and are on DEP's Approved List (see www.dep.pa.gov/chemicaladditives). Use one form per chemical additive and discharge point.

Permittee Name:	Shell Chemical Appalachia LLC	**Facility Name:**	Pennsylvania Chemicals Project
Permit No.:	PA0002208 A-2	**Municipality:**	Potter Township
Permit Effective Date:	July 1, 2015	**County:**	Beaver
Permit Expiration Date:	June 30, 2020		

Trade Name of Chemical Additive:	**3DT 198**
Manufacturer Name:	**Nalco**
Intended Use(s):	**Corrosion Inhibitor**
Location(s) of Use:	**Cooling Tower.**
Frequency of Use:	**Continuous**
Method of Introduction:	**Auto Feeder**
Treatment Following Introduction:	**No treatment**
Discharge Point (Outfall No.):	**001 via IMP 201**
Design Flow of Discharge (MGD):	**~3.28**
Receiving Water Body Name:	**Ohio River**
$Q_{7\text{-}10}$ Flow of Stream (cfs):	**4,730**
Calculated WQBEL (mg/L):	**35,612**
Maximum Usage Rate:	**975 (based on WQBEL)** **Units:** lb/day

Will Other Chemical Additives Be Introduced at the Same Time? ☒ YES ☐ NO If YES, Number: 7

I certify under penalty of law that this document was prepared under my direction or supervision in accordance with a system designed to assure that qualified personnel gather and evaluate the information submitted. Based on my inquiry of the person or persons who manage the system or those persons directly responsible for gathering the information, the information submitted is, to the best of my knowledge and belief, true, accurate and complete. I am aware that there are significant penalties for submitting false information, including the possibility of fine and imprisonment for knowing violations. See 18 Pa. C.S. § 4904 (relating to unsworn falsification).

Name/Title Principal Executive Officer

H. James Sewell

Phone: (724) 709-2411

Date: 9/5/19

Signature of Principal Executive Officer or Authorized Agent

Attorney-in-Fact

3800-FM-BCW0487 10/2017
Instructions

pennsylvania
DEPARTMENT OF ENVIRONMENTAL PROTECTION

COMMONWEALTH OF PENNSYLVANIA
DEPARTMENT OF ENVIRONMENTAL PROTECTION
BUREAU OF CLEAN WATER

CHEMICAL ADDITIVES NOTIFICATION FORM

Use this form to notify the DEP regional office that issued the NPDES permit of the new or increased use of chemical additives that were not reported in the NPDES permit application and are on DEP's Approved List (see www.dep.pa.gov/chemicaladditives). Use one form per chemical additive and discharge point.

Permittee Name:	Shell Chemical Appalachia LLC	**Facility Name:**	Pennsylvania Chemicals Project
Permit No.:	PA0002208 A-2	**Municipality:**	Potter Township
Permit Effective Date:	July 1, 2015	**County:**	Beaver
Permit Expiration Date:	June 30, 2020		

Trade Name of Chemical Additive:	**3DT 184**
Manufacturer Name:	**Nalco**
Intended Use(s):	**Corrosion inhibitor**
Location(s) of Use:	**Cooling Tower.**
Frequency of Use:	**Continuous**
Method of Introduction:	**Auto Feeder**
Treatment Following Introduction:	**No treatment**
Discharge Point (Outfall No.):	**001 via IMP 201**
Design Flow of Discharge (MGD):	**~3.28**
Receiving Water Body Name:	**Ohio River**
$Q_{7\text{-}10}$ Flow of Stream (cfs):	**4,730**
Calculated WQBEL (mg/L):	**4,600,000**
Maximum Usage Rate:	**125,955 (based on WQBEL)** **Units:** lb/day

Will Other Chemical Additives Be Introduced at the Same Time? ☒ YES ☐ NO If YES, Number: 7

I certify under penalty of law that this document was prepared under my direction or supervision in accordance with a system designed to assure that qualified personnel gather and evaluate the information submitted. Based on my inquiry of the person or persons who manage the system or those persons directly responsible for gathering the information, the information submitted is, to the best of my knowledge and belief, true, accurate and complete. I am aware that there are significant penalties for submitting false information, including the possibility of fine and imprisonment for knowing violations. See 18 Pa. C.S. § 4904 (relating to unsworn falsification).

Name/Title Principal Executive Officer

H. James Sewell

Phone: (724) 709-2411

Date: 9/5/19

Signature of Principal Executive Officer or Authorized Agent

H. J. Sewell
Attorney-in-Fact

3800-FM-BCW0487 10/2017
Instructions

pennsylvania
DEPARTMENT OF ENVIRONMENTAL PROTECTION

COMMONWEALTH OF PENNSYLVANIA
DEPARTMENT OF ENVIRONMENTAL PROTECTION
BUREAU OF CLEAN WATER

CHEMICAL ADDITIVES NOTIFICATION FORM

Use this form to notify the DEP regional office that issued the NPDES permit of the new or increased use of chemical additives that were not reported in the NPDES permit application and are on DEP's Approved List (see www.dep.pa.gov/chemicaladditives). Use one form per chemical additive and discharge point.

Permittee Name:	Shell Chemical Appalachia LLC	**Facility Name:**	Pennsylvania Chemicals Project
Permit No.:	PA0002208 A-2	**Municipality:**	Potter Township
Permit Effective Date:	July 1, 2015	**County:**	Beaver
Permit Expiration Date:	June 30, 2020		

Trade Name of Chemical Additive:	**Nalco 7473**
Manufacturer Name:	**Nalco**
Intended Use(s):	**Antifoam**
Location(s) of Use:	**Cooling Tower.**
Frequency of Use:	**As needed.**
Method of Introduction:	**Manual**
Treatment Following Introduction:	**No treatment**
Discharge Point (Outfall No.):	**001 via IMP 201**
Design Flow of Discharge (MGD):	**~3.28**
Receiving Water Body Name:	**Ohio River**
Q_{7-10} Flow of Stream (cfs):	**4,730**
Calculated WQBEL (mg/L):	**129,330**
Maximum Usage Rate:	**3,541 (Based on WQBEL)** **Units:** lb/day

Will Other Chemical Additives Be Introduced at the Same Time? ☒ YES ☐ NO If YES, Number: 7

I certify under penalty of law that this document was prepared under my direction or supervision in accordance with a system designed to assure that qualified personnel gather and evaluate the information submitted. Based on my inquiry of the person or persons who manage the system or those persons directly responsible for gathering the information, the information submitted is, to the best of my knowledge and belief, true, accurate and complete. I am aware that there are significant penalties for submitting false information, including the possibility of fine and imprisonment for knowing violations. See 18 Pa. C.S. § 4904 (relating to unsworn falsification).

Name/Title Principal Executive Officer

H. James Sewell

Phone: (724) 709-2411

Date: 9/5/19

Signature of Principal Executive Officer or Authorized Agent

Attorney-in-Fact

PENTOXSD

Modeling Input Data

Stream Code	RMI	Elevation (ft)	Drainage Area (sq mi)	Slope	PWS With (mgd)	Apply FC
32317	952.70	681.85	22771.00	0.00010	0.00	☑

Stream Data

	LFY (cfsm)	Trib Flow (cfs)	Stream Flow (cfs)	WD Ratio	Rch Width (ft)	Rch Depth (ft)	Rch Velocity (fps)	Rch Trav Time (days)	Tributary Hard (mg/L)	Tributary pH	Stream Hard (mg/L)	Stream pH	Analysis Hard (mg/L)	Analysis pH
Q7-10	0.21	0	4730	0	1200	15	0	0	100	7	0	0	0	0
Qh		0	0	0	0	0	0	0	100	7	0	0	0	0

Discharge Data

Name	Permit Number	Existing Disc Flow (mgd)	Permitted Disc Flow (mgd)	Design Disc Flow (mgd)	Reserve Factor	AFC PMF	CFC PMF	THH PMF	CRL PMF	Disc Hard (mg/L)	Disc pH
Outfall 001	PA0002208	3.28	0	0	0	0	0.2	0.2	0.2	702.9	6

Parameter Data

Parameter Name	Disc Conc (µg/L)	Trib Conc (µg/L)	Disc Daily CV	Disc Hourly CV	Steam Conc (µg/L)	Stream CV	Fate Coef	FOS	Crit Mod	Max Disc Conc (µg/L)
3D Trasar 3DT184	1000000	0	0.5	0.5	0	0	0	0	1	0
3D Trasar 3DT198	1000000	0	0.5	0.5	0	0	0	0	1	0
Nalco 3DT396	1000000	0	0.5	0.5	0	0	0	0	1	0
Nalco 7408	1000000	0	0.5	0.5	0	0	0	0	1	0
Nalco 7473	1000000	0	0.5	0.5	0	0	0	0	1	0

Stream Code	RMI	Elevation (ft)	Drainage Area (sq mi)	Slope	PWS With (mgd)	Apply FC
32317	951.71	681.67	22772.85	0.00010	216.00	☑

Stream Data

	LFY (cfsm)	Trib Flow (cfs)	Stream Flow (cfs)	WD Ratio	Rch Width (ft)	Rch Depth (ft)	Rch Velocity (fps)	Rch Trav Time (days)	Tributary Hard (mg/L)	Tributary pH	Stream Hard (mg/L)	Stream pH	Analysis Hard (mg/L)	Analysis pH
Q7-10	0.21	0	4730	0	1200	15	0	0	98	7	0	0	0	0
Qh		0	0	0	0	0	0	0	100	7	0	0	0	0

Discharge Data

Name	Permit Number	Existing Disc Flow (mgd)	Permitted Disc Flow (mgd)	Design Disc Flow (mgd)	Reserve Factor	AFC PMF	CFC PMF	THH PMF	CRL PMF	Disc Hard (mg/L)	Disc pH
		0	0	0	0	0	0	0	0	100	7

Parameter Data

Parameter Name	Disc Conc (µg/L)	Trib Conc (µg/L)	Disc Daily CV	Disc Hourly CV	Steam Conc (µg/L)	Stream CV	Fate Coef	FOS	Crit Mod	Max Disc Conc (µg/L)
3D Trasar 3DT184	0	0	0.5	0.5	0	0	0	0	1	0
3D Trasar 3DT198	0	0	0.5	0.5	0	0	0	0	1	0
Nalco 3DT396	0	0	0.5	0.5	0	0	0	0	1	0
Nalco 7408	0	0	0.5	0.5	0	0	0	0	1	0
Nalco 7473	0	0	0.5	0.5	0	0	0	0	1	0

PENTOXSD Analysis Results

Hydrodynamics

SWP Basin	Stream Code:	Stream Name:
20E	32317	OHIO RIVER

RMI	Stream Flow (cfs)	PWS With (cfs)	Net Stream Flow (cfs)	Disc Analysis Flow (cfs)	Reach Slope	Depth (ft)	Width (ft)	WD Ratio	Velocity (fps)	Reach Trav Time (days)	CMT (min)
Q7-10 Hydrodynamics											
952.700	4730	0	4730	5.07416	0.0001	15	1200	80	0.2631	0.23	1000+
951.710	4730	334.15	4395.8	NA	0	0	0	0	0	0	NA
Qh Hydrodynamics											
952.700	12101	0	12101	5.07416	0.0001	22.671	1200	52.931	0.445	0.136	1000+
951.710	12101	334.15	11767	NA	0	0	0	0	0	0	NA

PENTOXSD Analysis Results

Wasteload Allocations

RMI	Name	Permit Number
952.70	**Outfall 001**	**PA0002208**

AFC

Q7-10: **CCT (min)** 15 **PMF** 0.066 **Analysis pH** 6.942 **Analysis Hardness** 109.568

Parameter	Stream Conc (µg/L)	Stream CV	Trib Conc (µg/L)	Fate Coef	WQC (µg/L)	WQ Obj (µg/L)	WLA (µg/L)
Nalco 7408	0	0	0	0	6330	6330	398826.1
3D Trasar 3DT184	0	0	0	0	221000	221000	1.392E+07
3D Trasar 3DT198	0	0	0	0	1700	1700	107109.7
Nalco 7473	0	0	0	0	6250	6250	393785.7
Nalco 3DT396	0	0	0	0	104560	104560	6580000

CFC

Q7-10: **CCT (min)** 720 **PMF** 0.2 **Analysis pH** 6.979 **Analysis Hardness** 103.216

Parameter	Stream Conc. (µg/L)	Stream CV	Trib Conc. (µg/L)	Fate Coef	WQC (µg/L)	WQ Obj (µg/L)	WLA (µg/L)
Nalco 7408	0	0	0	0	703	703	131766.7
3D Trasar 3DT184	0	0	0	0	24556	24556	4600000
3D Trasar 3DT198	0	0	0	0	190	190	35612.61
Nalco 7473	0	0	0	0	690	690	129330
Nalco 3DT396	0	0	0	0	11618	11618	2170000

THH

Q7-10: **CCT (min)** 720 **PMF** 0.2 **Analysis pH** NA **Analysis Hardness** NA

Parameter	Stream Conc (µg/L)	Stream CV	Trib Conc (µg/L)	Fate Coef	WQC (µg/L)	WQ Obj (µg/L)	WLA (µg/L)
Nalco 7408	0	0	0	0	NA	NA	NA
3D Trasar 3DT184	0	0	0	0	NA	NA	NA
3D Trasar 3DT198	0	0	0	0	NA	NA	NA
Nalco 7473	0	0	0	0	NA	NA	NA

PENTOXSD Analysis Results

Wasteload Allocations

RMI	Name	Permit Number
952.70	**Outfall 001**	**PA0002208**

Nalco 3DT396	0	0	0	0	3340	3340	626032.2

CCT based on PWS at RMI 951.71.

CRL

Qh: **CCT (min)** 720 **PMF** 0.2

Parameter	Stream Conc (µg/L)	Stream CV	Trib Conc (µg/L)	Fate Coef	WQC (µg/L)	WQ Obj (µg/L)	WLA (µg/L)
Nalco 7408	0	0	0	0	NA	NA	NA
3D Trasar 3DT184	0	0	0	0	NA	NA	NA
3D Trasar 3DT198	0	0	0	0	NA	NA	NA
Nalco 7473	0	0	0	0	NA	NA	NA
Nalco 3DT396	0	0	0	0	NA	NA	NA

PENTOXSD Analysis Results

Recommended Effluent Limitations

SWP Basin	Stream Code:	Stream Name:
20E	32317	OHIO RIVER

RMI	Name	Permit Number	Disc Flow (mgd)
952.70	Outfall 001	PA0002208	3.2800

Parameter	Effluent Limit (µg/L)	Governing Criterion	Max. Daily Limit (µg/L)	Most Stringent WQBEL (µg/L)	Most Stringent WQBEL Criterion
3D Trasar 3DT184	1000000	INPUT	1560000	4600000	CFC
3D Trasar 3DT198	35612.61	CFC	55561.39	35612.61	CFC
Nalco 3DT396	626032.2	THH	976710.9	626032.2	THH
Nalco 7408	131766.7	CFC	205577.2	131766.7	CFC
Nalco 7473	129330	CFC	201775.6	129330	CFC