Timber Tech Engineering, Inc.
22 Denver Rd., Suite B
Denver, PA 17517
Phone: 717-335-2750
Fax: 717-335-2753
trr@timbertecheng.com

Design Engineer's Report – Revision #1

(For TTE #E010-14 Revision #1 & ME011AP,BP,CP-19 Revision #1)

PROJECT NAME AND LOCATION:

CFC Fulton Properties, LLC
Bivouac Farm
15197 Great Cove Road
Big Cove Tannery, PA 17212

PROJECT DESCRIPTION:

Structural designs of three concrete under barn manure storage facilities as follows: 160'-8"x 767'x 9' gestation deep pit, 71'x 338'x 6' gilt deep pit, and 120'x 510' x 2' farrowing reception pit for a new sow unit.

DATE:

December 16, 2019

FOR:

CFC Fulton Properties, LLC
2700 Clemens Road
Hatfield, PA 19440

CERTIFIED BY:

12/16/19

COMMONWEALTH OF PENNSYLVANIA
REGISTERED PROFESSIONAL
E010-14 Rev. 1
TIMOTHY R. ROYER
ENGINEER
No. PE038662E

Timothy R. Royer PA Eng. Cert. # 38662
Exp. Date: 9/30/2021

Timothy R. Royer, P.E.
Timber Tech Engineering, Inc.
22 Denver Road, Suite B
Denver, PA 17517
trr@timbertecheng.com

Table of Contents

General Information…….…..…....3

Site Topographic Map…….….…..….4

Design Criteria & Quality Assurance.…….……..…..5

Design Assumptions…….....6

Required Manure Storage Facility Setbacks……7

Manure Storage Subgrade Notes.……..…..8

Soils Investigation Notes……10

Manure Storage Volume Calculations…….....31

Operation and Maintenance Plan…….……...40

New Gestation Barn 9' Deep Pit Manure Storage Design…….42

New Farrowing Barn 2' Reception Pit Design...…….....……...82

New Gilt Barn 6' Deep Pit Manure Storage Design…….....120

Appendices:

Appendix A - NRCS PA313 Waste Storage Facility

Appendix B - NRCS PA606 Subsurface Drain

Appendix C - NRCS PA634 Waste Transfer

Appendix D - NRCS PA620 Underground Outlet

General Information:

Bivouac Farm is located in Ayr Township, Fulton County, Pennsylvania. The proposed sow unit swine facility at Bivouac Farm will be located on a 224-acre tract of land. Bivouac Farm is owned by CFC Fulton Properties, LLC and operated by Country View Family Farms, LLC. A local farmer operates the crop fields for crop production and pasturing/housing cattle. This farm has an approved ACT 38 Nutrient Management Plan and a Concentrated Animal Feeding Operations Permit (CAFO Permit).

This design engineer's report has been prepared to supply supporting calculations for the manure storage facility plans for the three proposed swine barns. The size of the proposed Farrowing barn is 120'x 510' with a shallow under barn reinforced concrete reception pit. The proposed Gilt Grower barn size is 71'x 338' with a 6' deep reinforced concrete under barn manure storage. The proposed Gestation barn size is 160'-8"x 767' with a 9' deep reinforced concrete under barn manure storage. The proposed barn locations have been situated to allow for the most efficient operational orientation for the proposed animal housing faclities.

This Water Quality Permit application is for the proposed sow unit at the Bivouac Swine Farm which will consist of construction of three new swine barns. The new barns will consist of a new 160'-8"x 767' Gestation barn with a 9' deep pit under barn manure storage facility, a new 120'x 510' Farrowing barn with 2' under barn reception pits which empty into the Gestation barn manure storage, and a new 71'x 338' Gilt Grower barn with a 6' deep manure storage under barn. The Gestation barn will house approximately 5,387 sows and 15 boars, the Farrowing barn will house approximately 960 sows with litters, and the Gilt Grower barn will house approximately 2,360 gilts. The proposed Gilt Grower and Gestation barns will utilize a precast concrete slatted floor system for manure collection in the pits under the barns. The proposed Farrowing barn will utilize a combination of concrete aisle ways and a plastic floor system for manure collection in the under barn reception pits. The proposed Gestation and Gilt Grower under barn manure storage designs and Farrowing under barn manure reception pit designs are included in the attached design plans with supporting calculations in this design engineer's report. The manure storage facilities have been designed in accordance with NRCS Waste Storage Facility standards and specifications.

Manure handling and storage for the proposed sow unit will be as follows. The new 160'-8" x 767' x 9' Gestation barn deep pit will function as a manure storage for animals housed in this barn as well as the Farrowing barn next to it. The 120'x 510' Farrowing barn will have 2' shallow under barn reception pits which are routinely emptied by a pull plug gravity system into the Gestation barn manure storage. The 71'x 338' x 6' Gilt Grower barn pit will function as manure storage for this barn only. A staff gage will be located in at least one pumpout of the gestation barn and gilt grower barn to routinely monitor manure storage depth. The Gestation barn pit and the Gilt Grower barn pit together will provide sufficient 6 month manure storage capacity for all the animals housed at this farm. The manure is then pumped out from these storage facilities and land applied in accordance with the approved Nutrient Management Plan. In the event that the Gestation barn manure storage is at full capacity there is enough volume in the freeboard of this barn to contain the farrowing barn shallow reception pits if the pull plugs were mistakenly pulled at this time, see the manure storage volume calculations section for details.

The purpose of this proposed sow unit is to add animal production capacity to this farm with the latest group housing having an open pen layout. A new foundation/leak detection drain tile will be installed at the perimeter of each new manure storage footing and will be collected at an observation well at each barn. A layer of drainfill material will be provided under the floor slabs with drain channels connecting to the perimeter footing drain to relieve any hydrostatic pressure under the floor as well as to provide a leak detection system.

Construction of the proposed sow unit is expected to begin soon after obtaining the WQM permit. Please see the attached Revision #1 design plans TTE plan # ME011AP-19 (Gestation Barn), ME011BP-19 (Farrowing Barn), and ME011CP-19 (Gilt Grower Barn) for further details of the proposed manure storage facilities for this proposed sow unit.

Topographic Location Map:

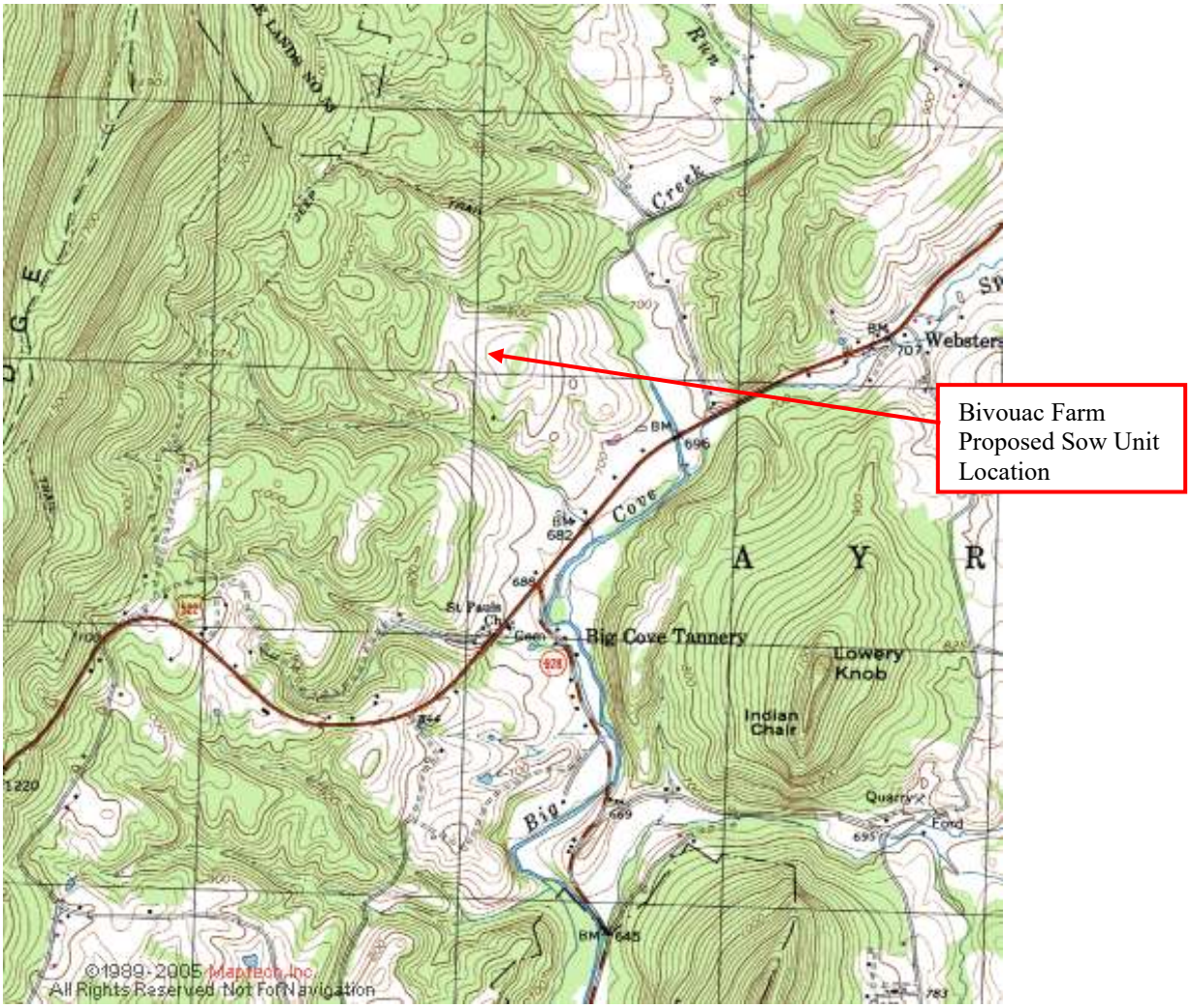

Big Cove Tannery, PA Quadrangle

Design Criteria & Quality Assurance:

The NRCS Pennsylvania Technical Guide was followed in the design of this manure handling and containment system. The following is the inspection schedule for quality control and quality assurance that will be followed during construction.

- Meet with contractor prior to start of construction to review plans and inspection schedule.
- Inspect sub base and base materials for the manure storage. If any springs, seeps, or sinkholes are encountered during excavation the design engineer shall be notified immediately.
- Prior and during the floor slab pour for each manure storage, inspect concrete and rebar placement for conformance with specifications.
- Prior and during the wall pour for each manure storage, inspect concrete and rebar placement for conformance with specifications.
- Perform a final inspection of each manure storage prior to backfilling walls, when precast slats and beams are grouted in place to inspect finished walls and the foundation/leak detection drain system as well as outlets to observation points for each manure storage to ensure conformance with specifications.
- Prepare as-built plans for each manure storage facility to indicate any changes that occurred during construction of the manure storage facilities.

Design Loading (Applies to each building):

60 pcf – EFD Soil pressure with a rigid or restrained wall design, Backfill height is typically between precast floor slat elevation and 1' below top of precast floor slats for each barn.

100 psf Vertical surcharge to account for equipment operation near pump out walls.

65 pcf – Stored manure (PA313), minimum of 6" of freeboard is required.

Lateral earth pressure values as per Section IV of the PA313 Tech Guide Standard.

Gravity loads from building bearing on pit sidewalls:

Snow load – 30 psf
Roof dead load – 10 psf
Floor dead load – 50 psf
Floor live load – 100 psf

Design Assumptions:

Concrete compressive strength will be 4,000 psi. Reinforcing steel will have a minimum of 60 ksi, yield strength.

The ACI 306 shall be followed for any cold weather concreting. If construction occurs during hot weather the ACI 305 shall be followed for any hot weather concreting.

The 8” thick walls are designed as rigid frame or restrained walls since they will be supported at the top by the precast slatted floor system. Also the base of wall to height of backfill ratio = 8”/72” = 0.11 > 0.085 where 0.085 is the upper limit for flexible wall design. Therefore, these walls are designed as frame tank walls according to Table 3 of the PA313.

The 10” thick walls are designed as rigid frame or restrained walls since they will be supported at the top by the precast slatted floor system. Also the base of wall to height of backfill ratio = 10”/108” = 0.093 > 0.085 where 0.085 is the upper limit for flexible wall design. Therefore, these walls are designed as frame tank walls according to Table 3 of the PA313.

The 12” thick walls are designed as rigid frame or restrained walls since they will be supported at the top by the precast slatted floor system. Also the base of wall to height of backfill ratio = 12”/108” = 0.11 > 0.085 where 0.085 is the upper limit for flexible wall design. Therefore, these walls are designed as frame tank walls according to Table 3 of the PA313.

The backfill material to be placed against walls of the manure storages is considered to be well drained by use of the perimeter footing drain system.

The manure storage floor slabs will be placed on a compacted crushed stone subgrade; the footings will be placed on compacted soil sub base with hydrostatic pressure relief channels installed under the footing 50’ on center to ensure drainage under the slab to the perimeter foundation/leak detection drain tile.

MWPS-1, MWPS-18, MWPS-36, and the ACI 318 Manual of Concrete Construction were used as references for these manure storage facility designs.

All applicable portions of the NRCS Technical Guide Specifications and Standards including but not limited to the PA313, PA606, PA620, and PA634 will be followed in the design, construction, and operation of these manure storage facilities.

Allowable soil bearing pressure is assumed to be a minimum of 2,000 psf.

Precast concrete components and wood framing will be designed by others; this certification applies only to the design of the reinforced concrete manure storage facilities indicated on the attached design plans.

NRCS standards for gravity transfer systems require a 1' minimum operating head for liquid manure with piping installed on a 1% minimum slope to 15% maximum slope.

Required Manure Storage Facility Setbacks:

Below is an excerpt from PA Code, Chapter 25, Section 83.351 that lists the setback distances required for manure storage facilities. These setbacks have been met with the proposed locations of the proposed under barn manure storage facilities for this project.

(vi) For NMP operations that come into existence after October 1, 1997, facilities, except reception pits and transfer pipes, may not be constructed:

(A) Within 100 feet of an intermittent or perennial stream, river, spring, lake, pond or reservoir.

(B) Within 100 feet of a wetland that is identified on the National Wetlands Inventory maps, if the following apply:

(I) The wetland is within the 100-year floodplain of an Exceptional Value stream segment.

(II) Surface flow is toward the wetland.

(C) Within 100 feet of a private water well, or open sinkhole.

(D) Within 100 feet of an active public drinking water well, unless other State or Federal laws or regulations require a greater isolation distance.

(E) Within 100 feet of an active public drinking water source surface intake, unless other State or Federal laws or regulations require a greater isolation distance.

(F) Within 200 feet of a property line, unless the landowners within the 200 foot distance from the facility otherwise agree and execute a waiver in a form acceptable to the Commission.

(G) Within 200 feet of an intermittent or perennial stream, river, spring, lake, pond, reservoir or any water well, or wetland described in clause (B), if a facility (except permanent stacking and compost facilities) is located on slopes exceeding 8% or has a capacity of 1.5 million gallons or greater.

(H) Within 300 feet of a property line, if a facility (except permanent stacking and compost facilities) is located on slopes exceeding 8%, and if the slope is toward the property line, or a facility has a capacity of 1.5 million gallons or greater, unless the landowners within the 300 foot distance from the facility otherwise agree and execute a waiver in a form acceptable to the Commission.

Manure Storage Facility Subgrade General Notes:

1. Any area to receive fill soil placement shall have all organic materials and topsoil removed. The building subgrade shall be visually inspected by the soil testing agency to confirm proceeding with placement of fill material. Since the manure storage facility is located under the building, the building subgrade is the same as the manure storage subgrade.

2. The building subgrade structural soil fill material shall be installed in 6”-8” loose lifts with each lift being compacted and tested before the next lift is installed under supervision of the soil testing agency. Inspection of the subgrade installation will be based on the PA NRCS Technical Guide Specifications and Standards.

3. For the building subgrade, structural soil fill material for areas with less than 6’ of fill depth is to be 4” minus material installed in 6”-8” loose lifts or as directed by the soil testing agency for proper compaction of excavated material at this site. Areas with greater than 6’ of fill depth may be rock fill material in the lower one-half of fill heights over 6’. Rock fill is to be 16” minus material installed in 16” loose lifts or as directed by the soil testing agency for proper compaction of excavated material at this site.

4. Satisfactory structural fill materials are of ASTM D2487 unified soil classification groups GW, GP, GM, GC, SW, SP, and SM. All fill materials shall be free of debris, waste, frozen materials, vegetation, and any other deleterious materials.

5. The building subgrade shall be graded and compacted to a density of at least 95 percent of the standard proctor density with soil at optimum moisture content or up to 2% higher. Slopes shall not be steeper than 2 to 1. All fills and excavated slopes shall be thoroughly compacted using a sheepsfoot or smooth drum vibratory roller.

6. Nuclear density and moisture content testing shall be completed during construction for structural soil fill at a rate of at least 1 test per 2,500 sq. ft. per constructed lift to verify proper compaction using the standard proctor density results. For rock fill material visual non-movement inspection shall be completed by the soil testing agency. Compaction testing and non-movement visual inspection of fill material is required at and below a 1:1 downward slope from the building footings.

7. When new soils placements are joined to completed placement areas a benching or stair stepping technique shall be used to adequately tie in the new soils. This will provide staggered lift joints for proper compaction.

8. Correction procedures for soil not meeting the density or moisture requirements shall be as follows:
Too Wet: Remove the material or scarify the soil and let it dry then rework it.
Too Dry: Remove the material or add water to the soil and rework it.

9. If construction occurs during cold weather, the placement fill soil shall be verified that it is not frozen prior to compaction.

10. The building subgrade soil under the floor slabs or footings of the manure storages shall have a permeability less than or equal to 1.0 x 10^-4 cm/sec. A flexible wall permeability test (falling head, rising tailwater setup) of a remolded sample of representative material is sufficient. At least one sample will be tested from each building subgrade.

11. If the building subgrade under the floor slab or footings of the manure storages consists of any bedrock or bedrock with open joints, fractures, or solution channels a separation layer shall be provided consisting of a minimum of 1 foot thick soil with a permeability less than or equal to 1 x 10^-4 cm/sec between the floor slab/footings of the manure storage and the bedrock or an alternative that will achieve equal protection. All bedrock encountered under the floor slab or footings shall be over-excavated and replaced with a minimum 1 foot thick soil separation layer. The soil separation layer shall be placed according to the structural soil fill requirements

Gravity Manure Transfer Pipe - Installation Notes:

Manure transfer pipes shall be gasketed PVC, SDR35, joints shall conform to ASTM D3212.

Pipe bedding should be 6” of AASHTO#10 stone dust/screenings or similar.

Pipe trench should allow for 6” separation between pipe and trench sides and trench bottom. This will provide 6” minimum bedding or initial backfill around pipe.

Initial backfill around pipe should be 2A modified stone or similar material to 6" min. over top of pipe.

Final trench backfill should be compacted on-site excavated material free of debris and rock greater than 2” diameter, install in uniform lifts.

A minimum of 36” cover should be provided above top of pipe to protect from freezing and vehicle loads.

Soils Investigation Notes:

A soils investigation was completed at the location of the proposed manure storage facilities to meet the NRCS PA313 Waste Storage Facility requirements of 3' below bottom of manure storage in areas of fractured bedrock. In March 2014 seven soil test pits were excavated and logged at locations to bracket the site of the proposed manure storage facilities. In September 2015 four additional test pits were excavated and logged to provide a more complete soils investigation. The soil logs are included in this section. There was no groundwater encountered in any of the eleven manure storage soil test pits.

The location of the soil test pits are shown on the site plan page of the manure storage plans. There are three soil test pits under the gestation barn that meet the PA313 requirement of 3' below bottom of storage. There are four soil test pits under the farrowing barn that meet the PA313 requirement of 3' below bottom of storage. There is one soil test pit under the gilt barn that meets the PA313 requirement of 3' below bottom of storage. The gilt barn only has one test pit because 3' under most of the gilt barn will be fill material.

Site geology was found to consist of the following. The top approximately one foot of soil is topsoil and root-laden soil which would set aside for later use in landscaping. Then generally the next five feet of excavation (1'-6' below existing grade) consists of highly weathered sandstone or siltstone, which can be excavated and used as fill material. Excavations made deeper than 6' below existing grade will generally produce variable mixtures of soil and rocks that may require ripping to remove and use as fill material.

Soils on site are KaC and KaD, Klinesville channery silt loam, descriptions of each are included in this section.

Fulton County, Pennsylvania

KaC—Klinesville channery silt loam, 8 to 15 percent slopes

Map Unit Setting

National map unit symbol: l902
Elevation: 300 to 1,500 feet
Mean annual precipitation: 32 to 50 inches
Mean annual air temperature: 45 to 57 degrees F
Frost-free period: 120 to 200 days
Farmland classification: Not prime farmland

Map Unit Composition

Klinesville and similar soils: 88 percent
Minor components: 12 percent
Estimates are based on observations, descriptions, and transects of the mapunit.

Description of Klinesville

Setting

Landform: Hillslopes
Landform position (two-dimensional): Shoulder
Landform position (three-dimensional): Side slope
Down-slope shape: Convex, linear
Across-slope shape: Linear, convex
Parent material: Residuum weathered from siltstone

Typical profile

H1 - 0 to 6 inches: channery silt loam
H2 - 6 to 8 inches: very channery silt loam
H3 - 8 to 14 inches: very channery loam
H4 - 14 to 24 inches: bedrock

Properties and qualities

Slope: 8 to 15 percent
Depth to restrictive feature: 10 to 20 inches to lithic bedrock
Natural drainage class: Somewhat excessively drained
Runoff class: Medium
Capacity of the most limiting layer to transmit water (Ksat): Moderately high to high (0.20 to 2.00 in/hr)
Depth to water table: More than 80 inches
Frequency of flooding: None
Frequency of ponding: None
Available water storage in profile: Very low (about 1.1 inches)

Interpretive groups

Land capability classification (irrigated): None specified
Land capability classification (nonirrigated): 4e
Hydrologic Soil Group: D
Hydric soil rating: No

Fulton County, Pennsylvania

KaD—Klinesville channery silt loam, 15 to 25 percent slopes

Map Unit Setting

National map unit symbol: l904
Elevation: 300 to 1,500 feet
Mean annual precipitation: 32 to 50 inches
Mean annual air temperature: 45 to 57 degrees F
Frost-free period: 120 to 200 days
Farmland classification: Not prime farmland

Map Unit Composition

Klinesville and similar soils: 88 percent
Minor components: 12 percent
Estimates are based on observations, descriptions, and transects of the mapunit.

Description of Klinesville

Setting

Landform: Hillslopes
Landform position (two-dimensional): Backslope
Landform position (three-dimensional): Side slope
Down-slope shape: Convex, linear
Across-slope shape: Linear, convex
Parent material: Residuum weathered from siltstone

Typical profile

H1 - 0 to 6 inches: channery silt loam
H2 - 6 to 8 inches: very channery silt loam
H3 - 8 to 14 inches: very channery loam
H4 - 14 to 24 inches: bedrock

Properties and qualities

Slope: 15 to 25 percent
Depth to restrictive feature: 10 to 20 inches to lithic bedrock
Natural drainage class: Somewhat excessively drained
Runoff class: High
Capacity of the most limiting layer to transmit water (Ksat): Moderately high to high (0.20 to 2.00 in/hr)
Depth to water table: More than 80 inches
Frequency of flooding: None
Frequency of ponding: None
Available water storage in profile: Very low (about 1.1 inches)

Interpretive groups

Land capability classification (irrigated): None specified
Land capability classification (nonirrigated): 6e
Hydrologic Soil Group: D
Hydric soil rating: No

703.2(c) 703.2(c)

AASHTO #57 Gradation

TABLE C
Size and Grading Requirements for Coarse Aggregates
(Based on Laboratory Sieve Tests, Square Openings)

AASHTO Number	Total Percent Passing													
	100 mm (4")	90 mm (3 1/2")	63 mm (2 1/2")	50 mm (2")	37.5 mm (1 1/2")	25.0 mm (1")	19.0 mm (3/4")	12.5 mm (1/2")	9.5 mm (3/8")	4.75 mm (No. 4)	2.36 mm (No. 8)	1.18 mm (No. 16)	150 µm (No. 100)	75 µm (No. 200) ***
1	100	90-100	25-60		0-15		0-5							
3			100	90-100	35-70	0-15		0-5						
467				100	95-100		35-70		10-30	0-5				
5					100	90-100	20-55	0-10	0-5					
57					100	95-100		25-60		0-10	0-5			
67						100	90-100		20-55	0-10	0-5			
7							100	90-100	40-70	0-15	0-5			
8								100	85-100	10-30	0-10	0-5		
10									100	85-100			10-30	
2A**				100			52-100		36-70	24-50	16-38*	10-30		
OGS**				100			52-100		36-65	8-40		0-12		

* Applies only for bituminous mixtures.
** PennDOT Number – Only Type C will be listed in Bulletin 14.
*** For 75 µm (No. 200), see Table D.

Note A: A combination of No. 7 and No. 5 may be substituted for No. 57, provided that not more than 50% or less than 30% of the combination is No. 7 size.

Note B: Provide No. OGS material that has a minimum average coefficient of uniformity of 4.0. The average coefficient of uniformity is defined as the average of the sublots within each lot. Determine the coefficient of uniformity according to PTM No. 149 each time the gradation is determined. The required minimum coefficient of uniformity for individual samples is 3.5. If the coefficient of uniformity of any sample falls below 3.5, reject the lot. Do not use the coefficient of uniformity in the multiple deficiency formula.

Bivouac Farm - Soil Test Pit Logs

Excavated 3/14/14 and 9/29/15
Soils Map Types:
KaC - Klinesville channery silt loam, 8 to 15 percent slopes
KaD - Klinesville channery silt loam, 15 to 25 percent slopes

Soil Test Pit #1

0" to 9"	topsoil
9" to 40"	channery silt loam
40" to 60"	very channery loam
60" to 96"	very channery loam, shaley
96"	no water, no refusal

Total TP depth = 8'
Existing grade EL = 869'
Bottom TP EL = 861'
Proposed Pit FF EL = 841.67'
Note: 19.3' above Pit FF, informational only, not used to meet PA313 Soils Investigation.

Soil Test Pit #2

0" to 8"	topsoil
8" to 30"	channery silt loam
30" to 72"	very channery silt loam
72" to 144"	very channery loam, shaley
144"	no water, no refusal

Total TP depth = 12'
Existing grade EL = 863'
Bottom TP EL = 851'
Proposed Pit FF EL = 841.67'
Note: 9.3' above Pit FF, informational only, not used to meet PA313 Soils Investigation.

Soil Test Pit #3

0" to 8"	topsoil
8" to 30"	channery silt loam
30" to 60"	very channery loam
60" to 84"	very channery loam, shaley
84"	no water, no refusal

Total TP depth = 7'
Existing grade EL = 842.5'
Bottom TP EL = 835.5'
Proposed Pit FF EL = 841.67'
Note: 6.1' below Pit FF, this test pit was used to meet PA313 Soils Investigation.

Soil Test Pit #4

0" to 7"	topsoil
7" to 30"	channery silt loam
30" to 60"	very channery silt loam
60" to 78"	very channery loam
78"	no water, no refusal

Total TP depth = 6.5'
Existing grade EL = 825'
Bottom TP EL = 818.5'
Proposed Pit FF EL = 850'
Note: 31.5' below Pit FF, this test pit was used to meet PA313 Soils Investigation.

Soil Test Pit #5

0" to 8"	topsoil
8" to 30"	channery silt loam
30" to 60"	very channery silt loam
60" to 80"	very channery loam
80" to 102"	very channery loam, shaley
102"	no water, no refusal

Total TP depth = 8.5'
Existing grade EL = 849'
Bottom TP EL = 840.5'
Proposed Pit FF EL = 850'
Note: 9.5' below Pit FF, this test pit was used to meet PA313 Soils Investigation.

Soil Test Pit #6

0" to 8"	topsoil
8" to 20"	channery silt loam
20" to 50"	very channery silt loam
50" to 96"	very channery loam, shaley
96"	no water, no refusal

Total TP depth = 8'
Existing grade EL = 845.5'
Bottom TP EL = 837.5'
Proposed Pit FF EL = 850'
Note: 12.5' below Pit FF, this test pit was used to meet PA313 Soils Investigation.

Soil Test Pit #7

0" to 6"	topsoil
6" to 20"	channery silt loam
20" to 50"	very channery silt loam
50" to 72"	very channery loam
72" to 90"	very channery loam, shaley
90"	no water, no refusal

Total TP depth = 7.5'
Existing grade EL = 839'
Bottom TP EL = 831.5'
Proposed Pit FF EL = 841.67'
Note: 10.1' below Pit FF, this test pit was used to meet PA313 Soils Investigation.

Soil Test Pit #8

0" to 8"	topsoil, silt loam
8" to 30"	channery silt loam
30" to 40"	very channery silt loam
40" to 57"	very channery silt loam
57" to 80"	extremely stoney silt loam
80" to 120"	fractured bedrock at 80"
120"	no water, no refusal

Total TP depth = 10'
Existing grade EL = 848.5'
Bottom TP EL = 838.5'
Proposed Pit FF EL = 841.67'
Note: 3.1' below Pit FF, this test pit was used to meet PA313 Soils Investigation.

Soil Test Pit #9

0" to 7"	topsoil, channery silt loam
7" to 23"	very channery silt loam
23" to 46"	fractured bedrock at 46"
46" to 120"	90% loose shale
120"	no water, no refusal

Total TP depth = 10'
Existing grade EL = 848.5'
Bottom TP EL = 838.5'
Proposed Pit FF EL = 841.67'
Note: 3.1' below Pit FF, this test pit was used to meet PA313 Soils Investigation.

Soil Test Pit #10

0" to 9"	topsoil, silt loam
9" to 30"	channery silt loam
30" to 79"	very channery silt loam
79" to 107"	fractured bedrock at 107"
107" to 120"	90% fractured shale
120"	no water, no refusal

Total TP depth = 10'
Existing grade EL = 844'
Bottom TP EL = 834'
Proposed Pit FF EL = 850'
Note: 16' below Pit FF, this test pit was used to meet PA313 Soils Investigation.

Soil Test Pit #11

0" to 8"	topsoil, silt loam
8" to 30"	channery silt loam
30" to 68"	very channery silt loam
68" to 120"	fractured bedrock at 68"
120"	no water, no refusal

Total TP depth = 10'
Existing grade EL = 849'
Bottom TP EL = 839'
Proposed Pit FF EL = 850'
Note: 11' below Pit FF, this test pit was used to meet PA313 Soils Investigation.

TSI
TESTING SERVICES, INC.

1844 Swatara Street
Harrisburg, PA 17104
(717) 441-9720
FAX 441-9721

MEMORANDUM

TO: Tom Poole
FROM: Gary LaFrance
SUBJECT: Earthwork for Bivouac Sow Farm, Fulton County, PA
DATE: July 24, 2015

Per your request, I have reviewed the earthwork requirements for the above-noted project. My review included consideration of the following documents provided to me:

1. TimberTech's specifications for soil compaction;
2. The site plan (Sheet No. 6 of CES Engineering's drawings);
3. The building plans (six drawings by TimberTech);
4. Seven test pit logs and a location plan; and
5. Photographs of the test pits.

In addition, I performed a Web Soil Survey using the NRCS interactive web site and I obtained from PA DEP a copy of the Water Quality Permit Application submitted for this project.

I offer the following observations regarding the proposed earthwork:

- ❑ The top one foot of excavated soil is topsoil and root-laden soil which should be removed and set aside for later use in the landscaping.

- ❑ Generally, the next five feet of excavation (i.e., from one to six feet below the ground surface) consist of highly weathered sandstone or siltstone, which can be excavated, transported, and compacted in accordance with TimberTech's specifications for soil compaction.

- Excavations made deeper than six feet below existing ground will generally produce variable mixtures of soil and rocks. The excavation process may require ripping. Placement and compaction of the soil-rock mixture will necessitate implementation of a new specification for compacting rock fill. The maximum lift thickness for rock fill will be 16 inches (double that for normal soil compaction). Compaction of the rock fill will be achieved by six passes of a CAT 825 padded-wheel roller (or equal). Additional passes, if required, will be paid for as an extra cost per pass.

- Other than the embankments for the detention ponds, rock fill shall only be placed within the lower one-half of fill heights greater than six feet. If the planned fill height is less than six feet, only soil fill can be used at that location. This restriction will necessitate pre-planning of the movements of the vehicles used in the earthwork construction.

- Re the embankments for the detention ponds, soil fill must be used in the central core and inner slope of the embankments. Rock fill maybe used along the outer slope of the embankments.

Respectfully submitted,

Gary G. LaFrance, P.E.

COMMONWEALTH OF PENNSYLVANIA
REGISTERED PROFESSIONAL
GARY GAINES LAFRANCE
ENGINEER
No. 11929-E

Eric Wriglesworth <eric@timbertecheng.com>

Bivouac Sow Farm Info

tsitesting@aol.com <tsitesting@aol.com> Tue, Jul 28, 2015 at 12:20 PM
To: eric@timbertecheng.com

Eric,

Maximum Rock Size
Soil Fill = 4"
Rock Fill = 16"

Tom Poole
TESTING SERVICES, INC
1844 Swatara Street
Harrisburg, PA 17104

717-441-9720 - office
tsitesting@aol.com

----Original Message----
From: Eric Wriglesworth <eric@timbertecheng.com>
To: Tsi Testing Tom Poole <tsitesting@aol.com>
Sent: Mon, Jul 27, 2015 1:42 pm
Subject: Re: Bivouac Sow Farm Info

Thanks Tom. Is there a rock size limit we should use for fill material or should it be the same as lift thickness? Such as 8" minus material for 8" thick soil fill lifts and 16" minus for 16" rock-soil lifts?

Thanks,
Eric

Eric Wriglesworth
Timber Tech Engineering, Inc
717.335.2750
www.timbertecheng.com

On Fri, Jul 24, 2015 at 3:58 PM, <tsitesting@aol.com> wrote:

> Eric,
>
> Attached please find requested recommendations from TSI.
>
> Tom
> **TESTING SERVICES, INC**
> 1844 Swatara Street
> Harrisburg, PA 17104

TESTING SERVICES, INC.

1844 Swatara Street
Harrisburg, PA 17104

(717) 441-9720
FAX 441-9721

DAILY FIELD REPORT

Tested for:	Eric Wriglesworth Timber Tech Engineering 22 Denver Road Suite B Denver, PA 17517-	Project:	Bivouac Sow Farm 15197 Great Cove Road, Big Cove Tannery,PA
Date:	Friday, March 14, 2014	Report No:	2200-1

Weather	Cloudy
Temperature	30 to 40
Inspector	Thomas Poole

Type of Inspection Being Performed						
X	Soils				Concrete	
		Foundations				Batch Plant
		Controlled Fill (Compaction)				Placement (Job Site)
	X	Test Pits				Cylinder Pick-Up
	Asphalt				Other	
		Batch Plant				
		Placement (Job Site)				

Brief Resume of Work Accomplished This Date:
A TSI Inspector arrived on site as scheduled to witness the excavation of test pits and to obtain soil samples for classification and proctor testing.
Seven test pits were dug throughout the building areas. Five soil samples were obtained and returned to the laboratory for classification and standard proctor (ASTM D-698) testing as directed by Eric Wriglesworth of Timber Tech Engineering.

:

Respectfully submitted,
Testing Services, Inc.

These test results apply only to the specific location(s) noted and may not represent any other locations or elevations.
Reports may not be reproduced except in full without written permission from Testing Services, Inc.

TESTING SERVICES, INC.

1844 Swatara Street
Harrisburg, PA 17104

(717) 441-9720
FAX 441-9721

REPORT OF MOISTURE DENSITY RELATIONSHIP OF SOIL

Tested for:	Eric Wriglesworth Timber Tech Engineering 22 Denver Road Suite B Denver, PA 17517-	Project:	Bivouac Sow Farm 15197 Great Cove Road, Big Cove Tannery,PA
Date:	Tuesday, March 18, 2014	Report No:	2200-2

Visual Classification	Well-Graded Gravel with Clay and Sand
Sample Source	Test Pit #2
Method of Test	ASTM D-698 Procedure C
Maximum Dry Density	116.0 pcf
Optimum Moisture Content	12.8 %

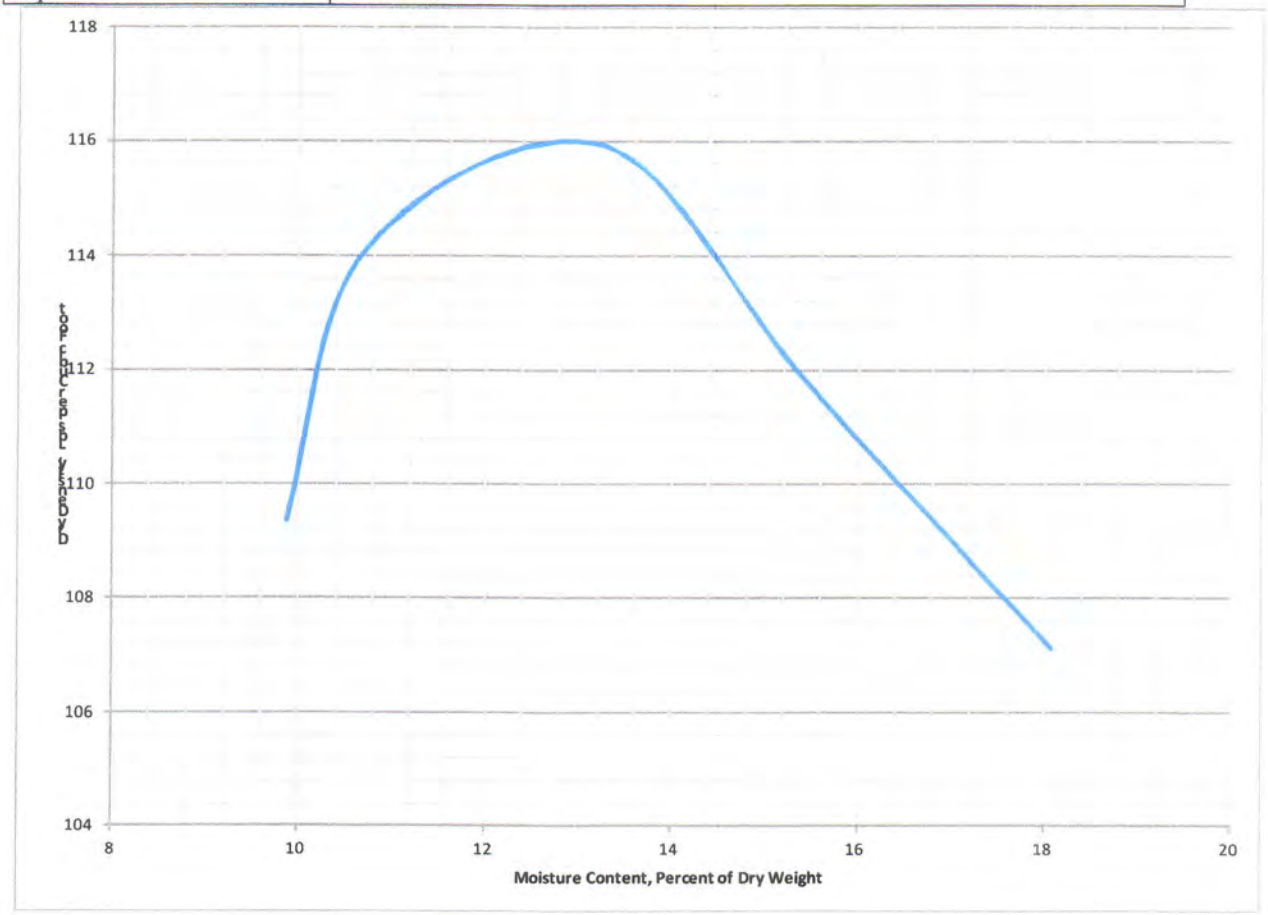

These test results apply only to the specific location(s) noted and may not represent any other locations or elevations.
Reports may not be reproduced except in full without written permission from Testing Services, Inc.

TESTING SERVICES, INC.
1844 Swatara Street
Harrisburg, PA 17104

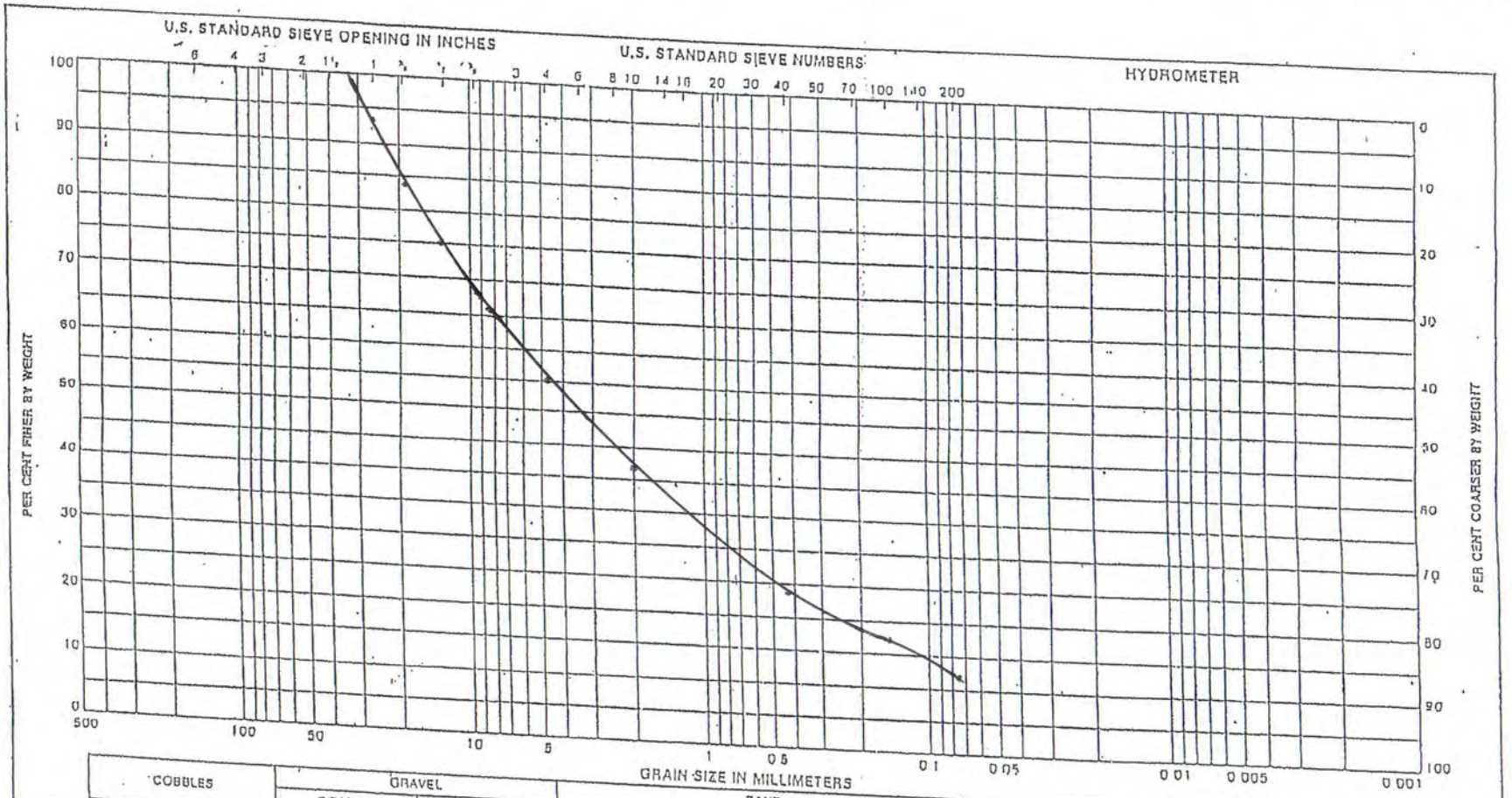

Boring No.	Sample No.	Elev. or Depth	Classification	Nat w %	LL	PL	PI	Project
TP#2			GW-GC	10.34	29.8	22.4	7.4	Bivouac Sod farm
			well-Graded Gravel					15197 Great Cove Road
			with Clay and Sand					Big Cove Tannery, PA

REPORT OF SOIL ANALYSIS

File No 2200-2

TESTING SERVICES, INC.

1844 Swatara Street
Harrisburg, PA 17104

(717) 441-9720
FAX 441-9721

REPORT OF MOISTURE DENSITY RELATIONSHIP OF SOIL

Tested for: Eric Wriglesworth
Timber Tech Engineering
22 Denver Road
Suite B
Denver, PA 17517-

Project: Bivouac Sow Farm
15197 Great Cove Road, Big Cove
Tannery,PA

Date: Friday, March 21, 2014

Report No: 2200-3

Visual Classification	Silty Sand with Gravel
Sample Source	Test Pit #1
Method of Test	ASTM D-698 Procedure C
Maximum Dry Density	112.1 pcf
Optimum Moisture Content	13.2 %

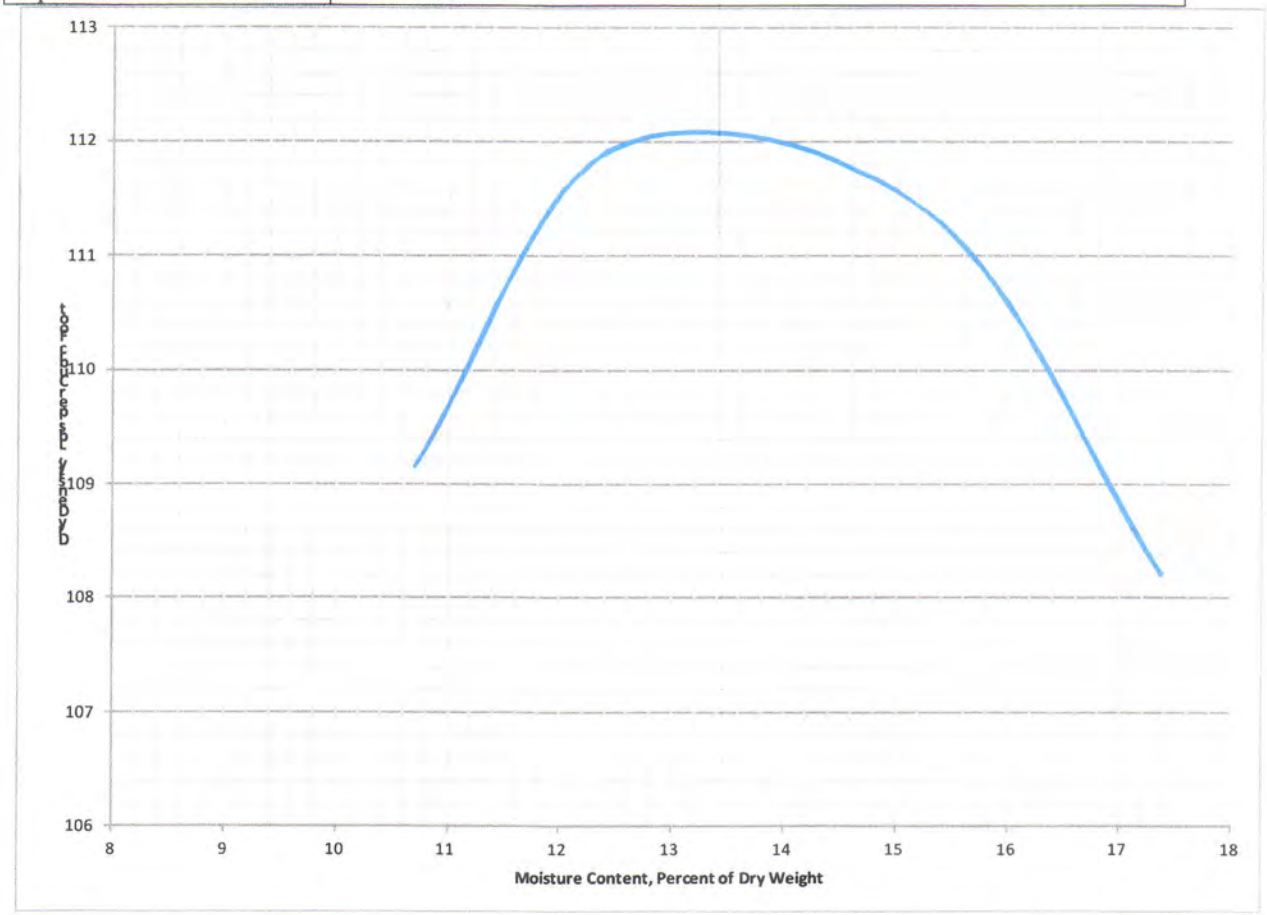

These test results apply only to the specific location(s) noted and may not represent any other locations or elevations.
Reports may not be reproduced except in full without written permission from Testing Services, Inc.

TESTING SERVICES, INC.
1844 Swatara Street
Harrisburg, PA 17104

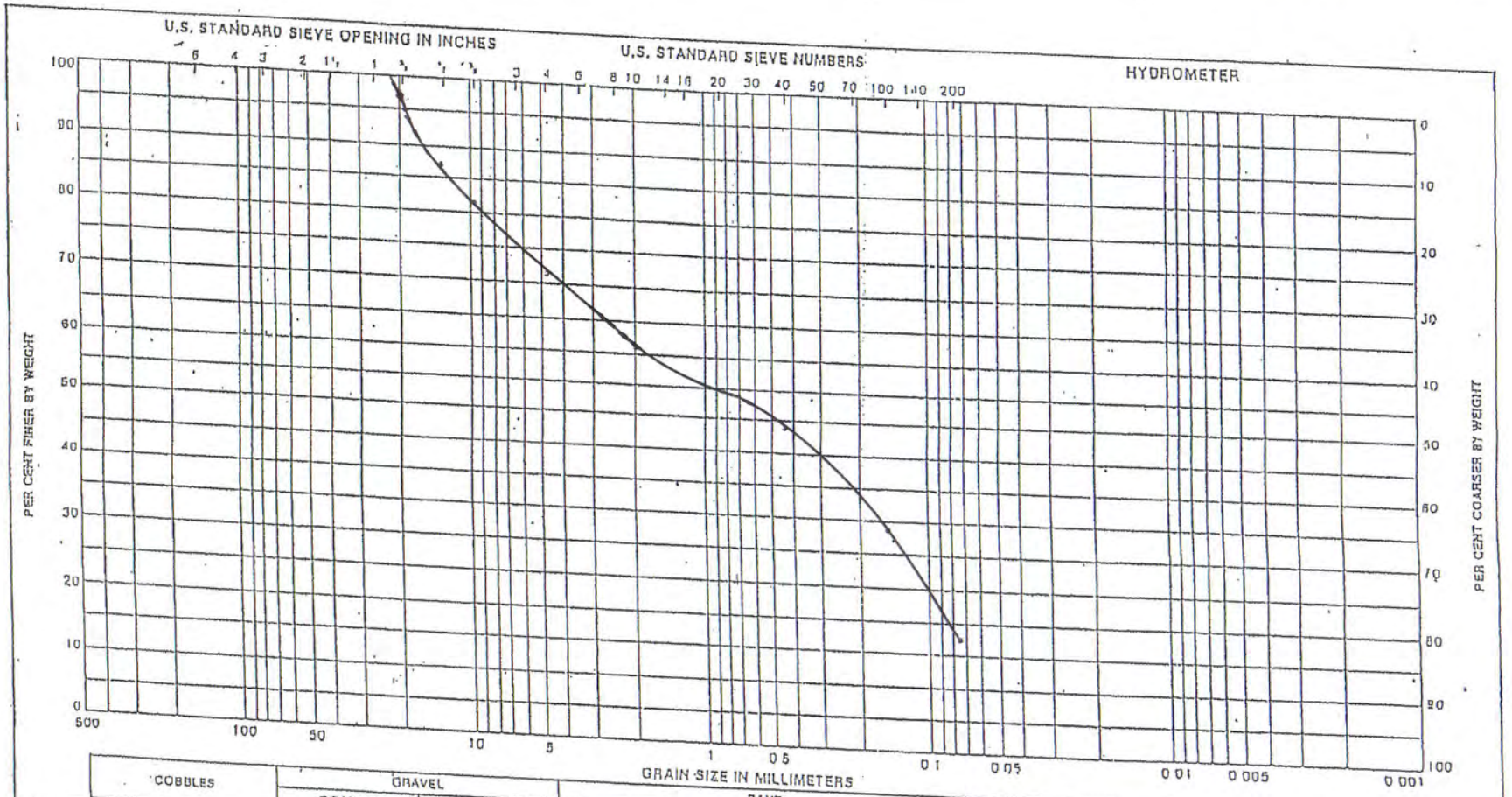

Boring No.	Sample No.	Elev. or Depth	Classification	Nat'l %	LL	PL	PI	Project
TP #1			SM Silty Sand with Gravel	12.36	Non-Plastic			Bivouac Sow Farm 15197 Great Cove Road Big Cove Tannery, PA

REPORT OF SOIL ANALYSIS

File No 22000 - 3

TESTING SERVICES, INC.

1844 Swatara Street
Harrisburg, PA 17104

(717) 441-9720
FAX 441-9721

REPORT OF MOISTURE DENSITY RELATIONSHIP OF SOIL

Tested for: Eric Wriglesworth
Timber Tech Engineering
22 Denver Road
Suite B
Denver, PA 17517-

Project: Bivouac Sow Farm
15197 Great Cove Road, Big Cove
Tannery,PA

Date: Friday, March 21, 2014

Report No: 2200-4

Visual Classification	Clayey Sand with Gravel
Sample Source	Test Pit #3
Method of Test	ASTM D-698 Procedure C
Maximum Dry Density	113.2 pcf
Optimum Moisture Content	13.5 %

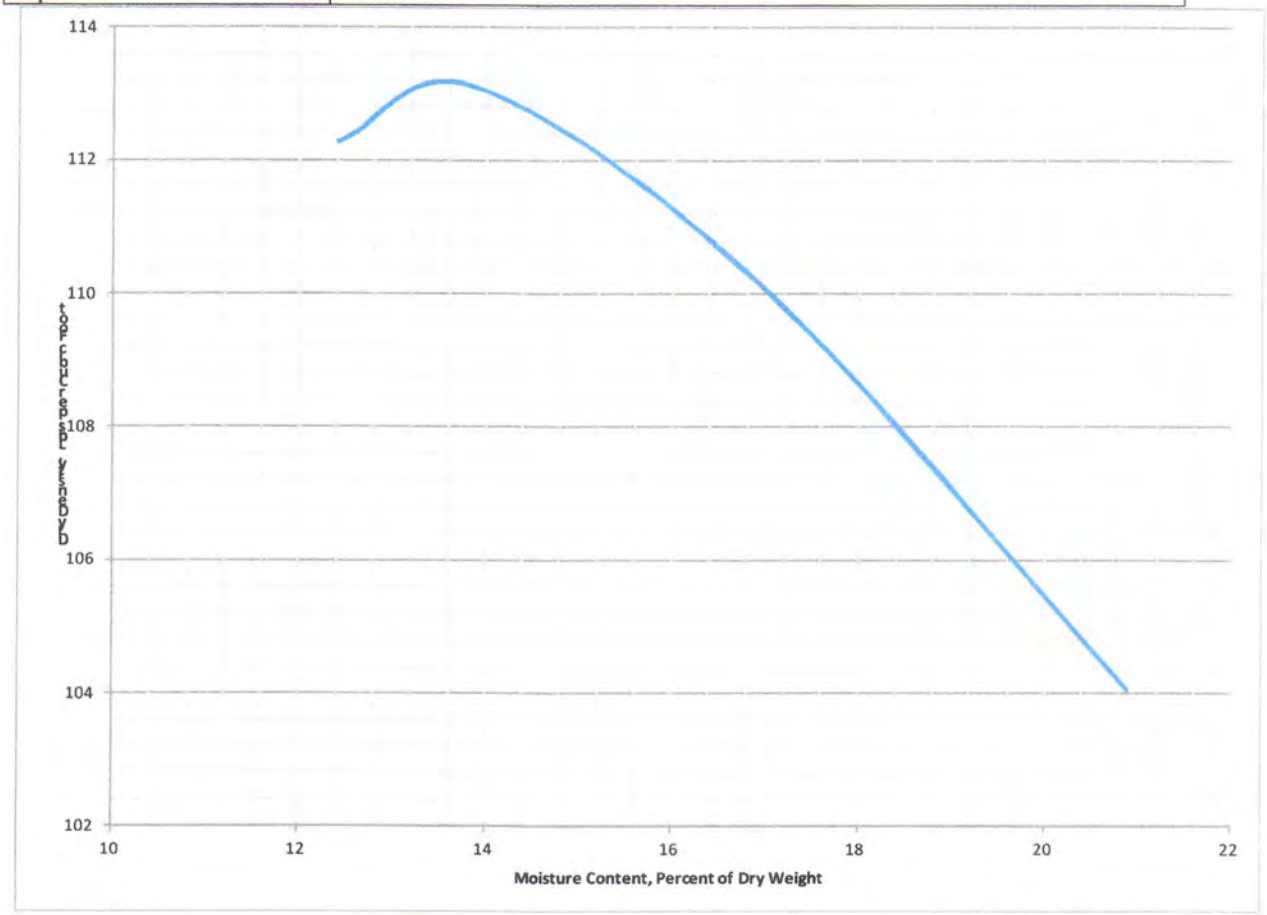

These test results apply only to the specific location(s) noted and may not represent any other locations or elevations.
Reports may not be reproduced except in full without written permission from Testing Services, Inc.

TESTING SERVICES, INC.
1844 Swatara Street
Harrisburg, PA 17104

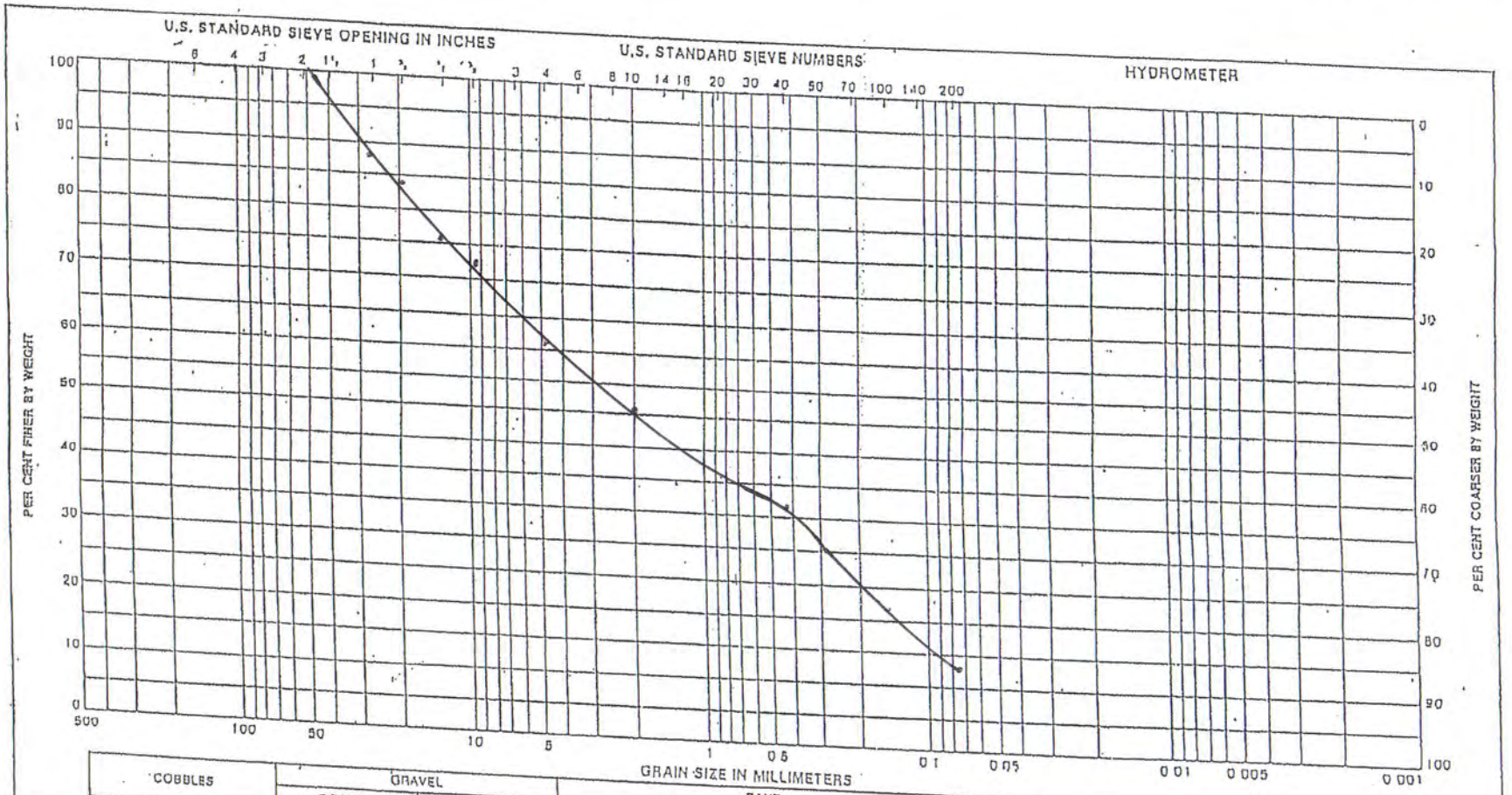

Boring No.	Sample No.	Elev. or Depth	Classification	Nat'l %	LL	PL	PI	Project
TP #3			SC	10.5	32.1	22.2	9.9	Bivouac Sow Farm
			Clayey Sand with Gravel					15197 Great Cove Road
								Big Cove Tannery, PA

REPORT OF SOIL ANALYSIS

File No 2200 - 4

TESTING SERVICES, INC.

1844 Swatara Street
Harrisburg, PA 17104

(717) 441-9720
FAX 441-9721

REPORT OF MOISTURE DENSITY RELATIONSHIP OF SOIL

Tested for: Eric Wriglesworth
Timber Tech Engineering
22 Denver Road
Suite B
Denver, PA 17517-

Project: Bivouac Sow Farm
15197 Great Cove Road, Big Cove
Tannery,PA

Date: Monday, March 24, 2014

Report No: 2200-5

Visual Classification	Silty Gravel with Sand
Sample Source	Test Pit #4
Method of Test	ASTM D-698 Procedure C
Maximum Dry Density	120.8 pcf
Optimum Moisture Content	11.7 %

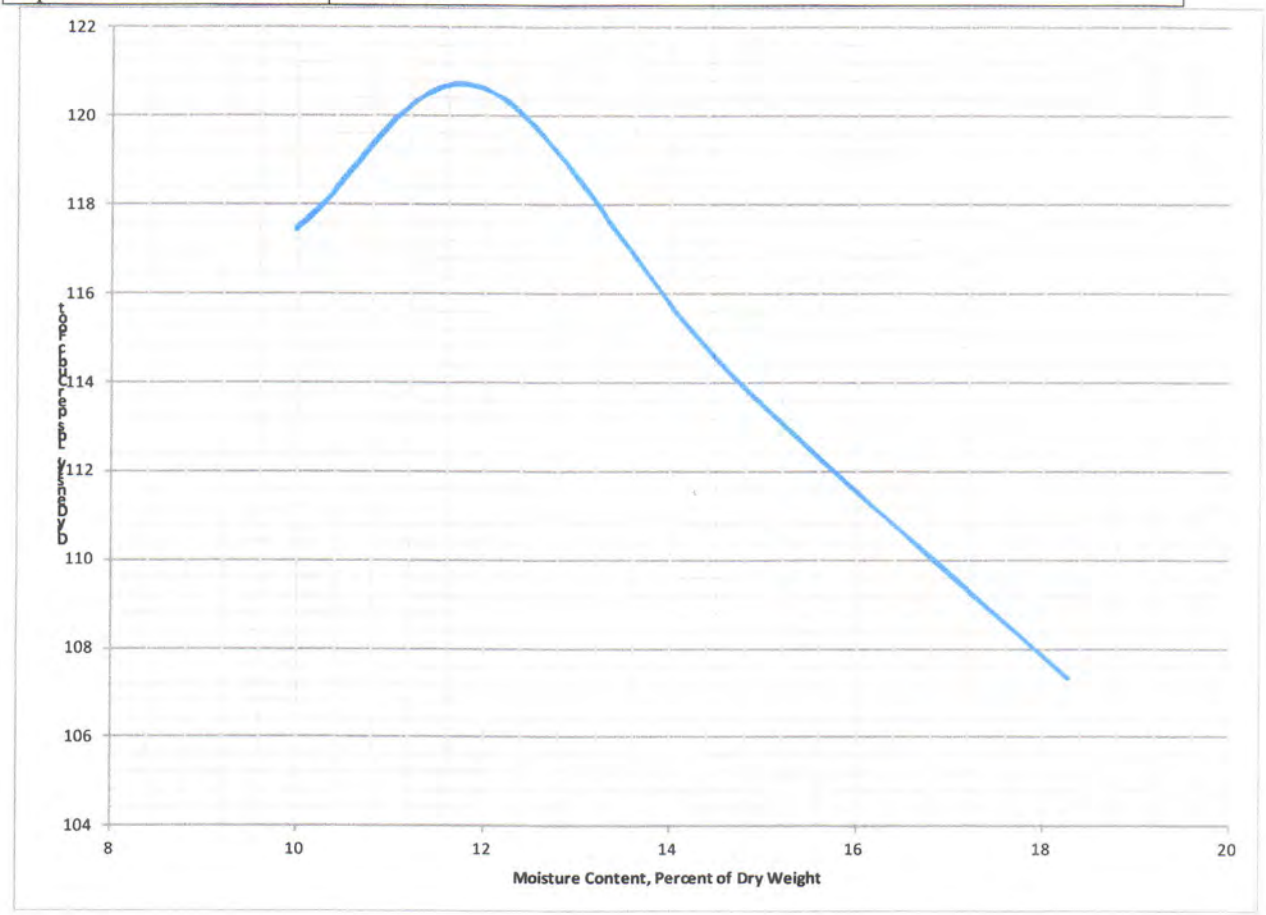

These test results apply only to the specific location(s) noted and may not represent any other locations or elevations.
Reports may not be reproduced except in full without written permission from Testing Services, Inc.

TESTING SERVICES, INC.
1844 Swatara Street
Harrisburg, PA 17104

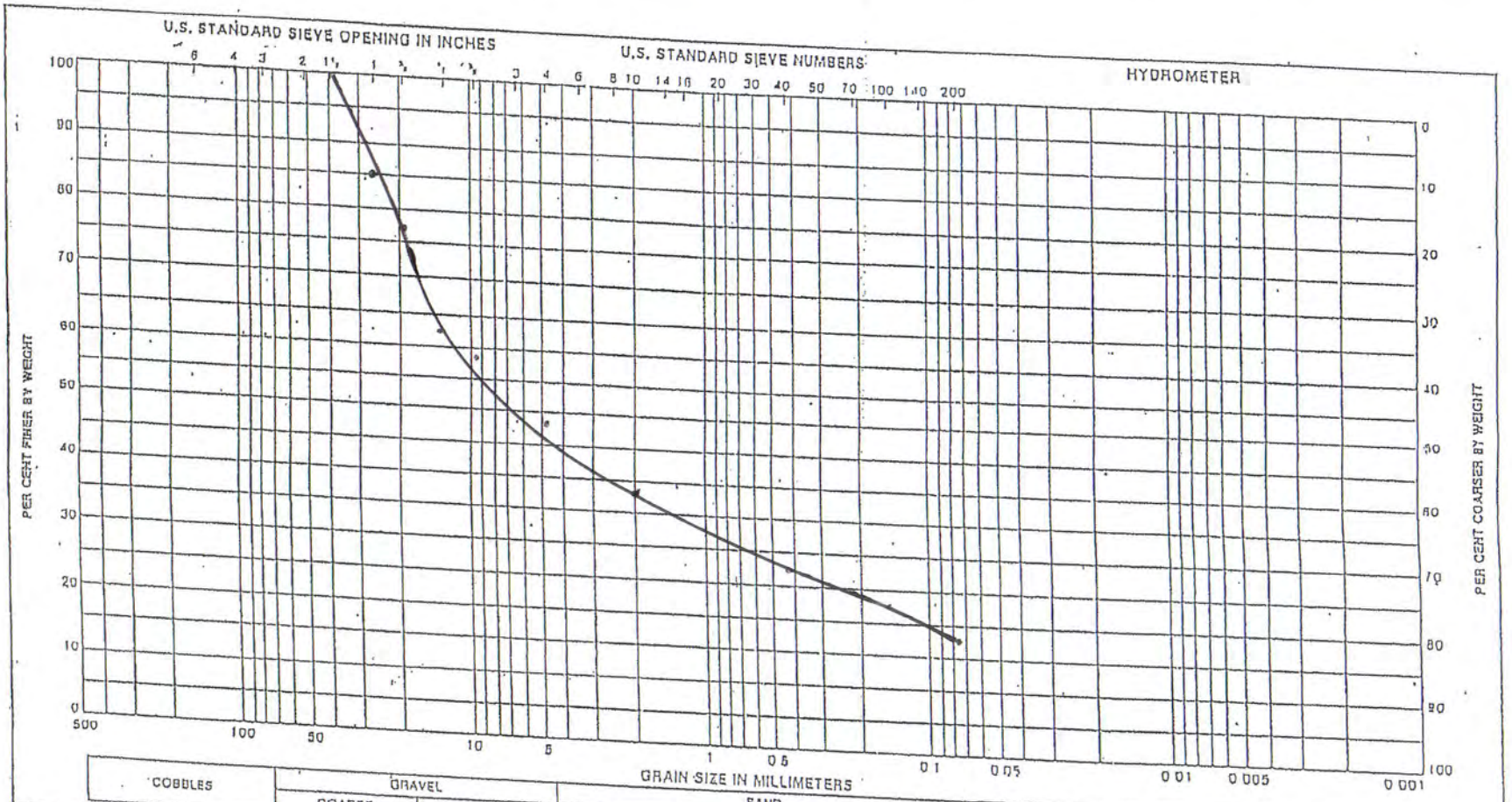

Boring No.	Sample No.	Elev. or Depth	Classification	Nat w %	LL	PL	PI	Project
TP #4			GM Silty Gravel with Sand	7.40	22.9	19.7	3.2	Bivouac Sow Farm 15197 Great Cove Road Big Cove Tannery, PA

REPORT OF SOIL ANALYSIS

File No 2200-5

TESTING SERVICES, INC.

1844 Swatara Street
Harrisburg, PA 17104

(717) 441-9720
FAX 441-9721

REPORT OF MOISTURE DENSITY RELATIONSHIP OF SOIL

Tested for: Eric Wriglesworth
Timber Tech Engineering
22 Denver Road
Suite B
Denver, PA 17517-

Project: Bivouac Sow Farm
15197 Great Cove Road, Big Cove
Tannery,PA

Date: Monday, March 24, 2014

Report No: 2200-6

Visual Classification	Well Graded Gravel with Clay and Sand
Sample Source	Test Pit #7
Method of Test	ASTM D-698 Procedure C
Maximum Dry Density	118.4 pcf
Optimum Moisture Content	14.0 %

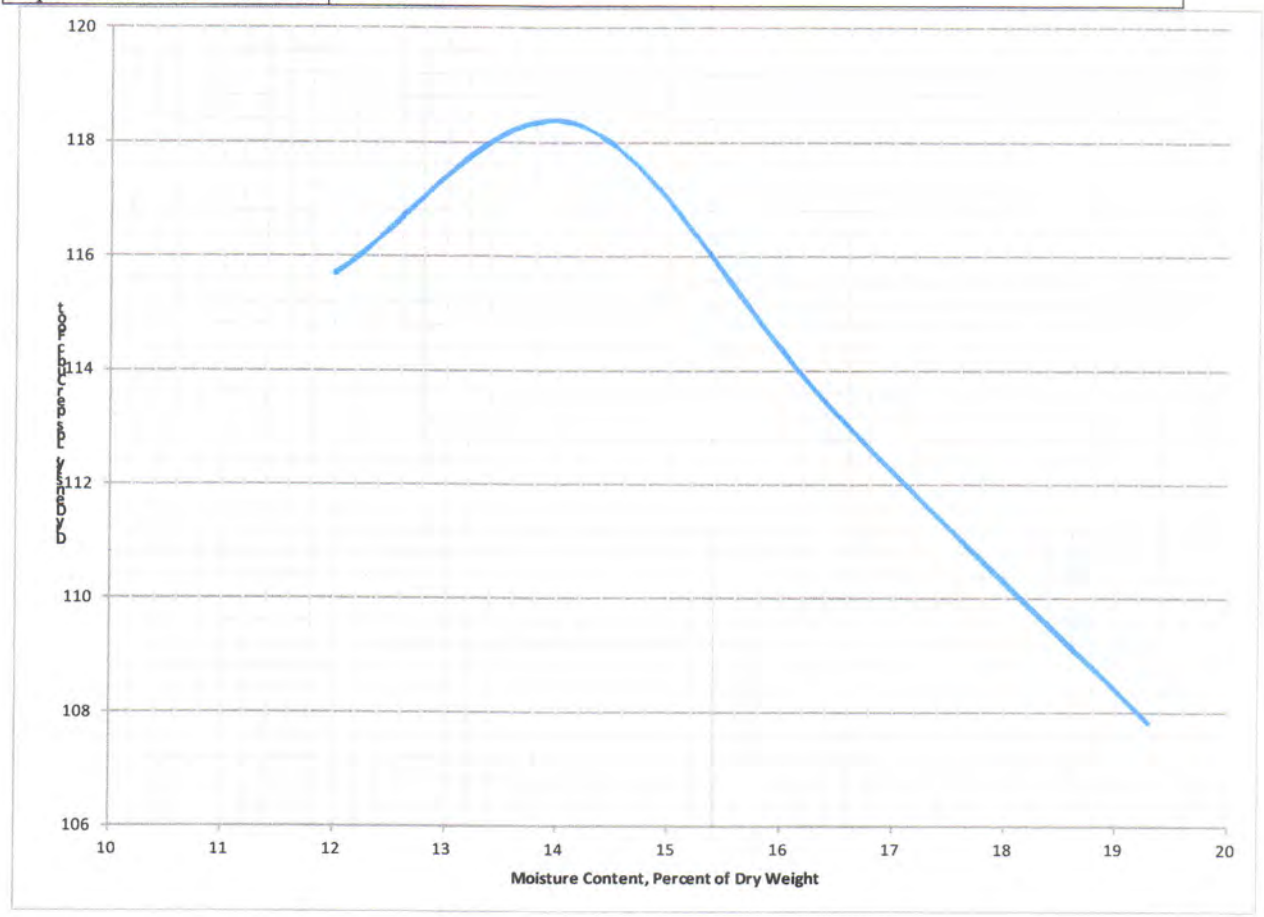

These test results apply only to the specific location(s) noted and may not represent any other locations or elevations.
Reports may not be reproduced except in full without written permission from Testing Services, Inc.

TESTING SERVICES, INC.
1844 Swatara Street
Harrisburg, PA 17104

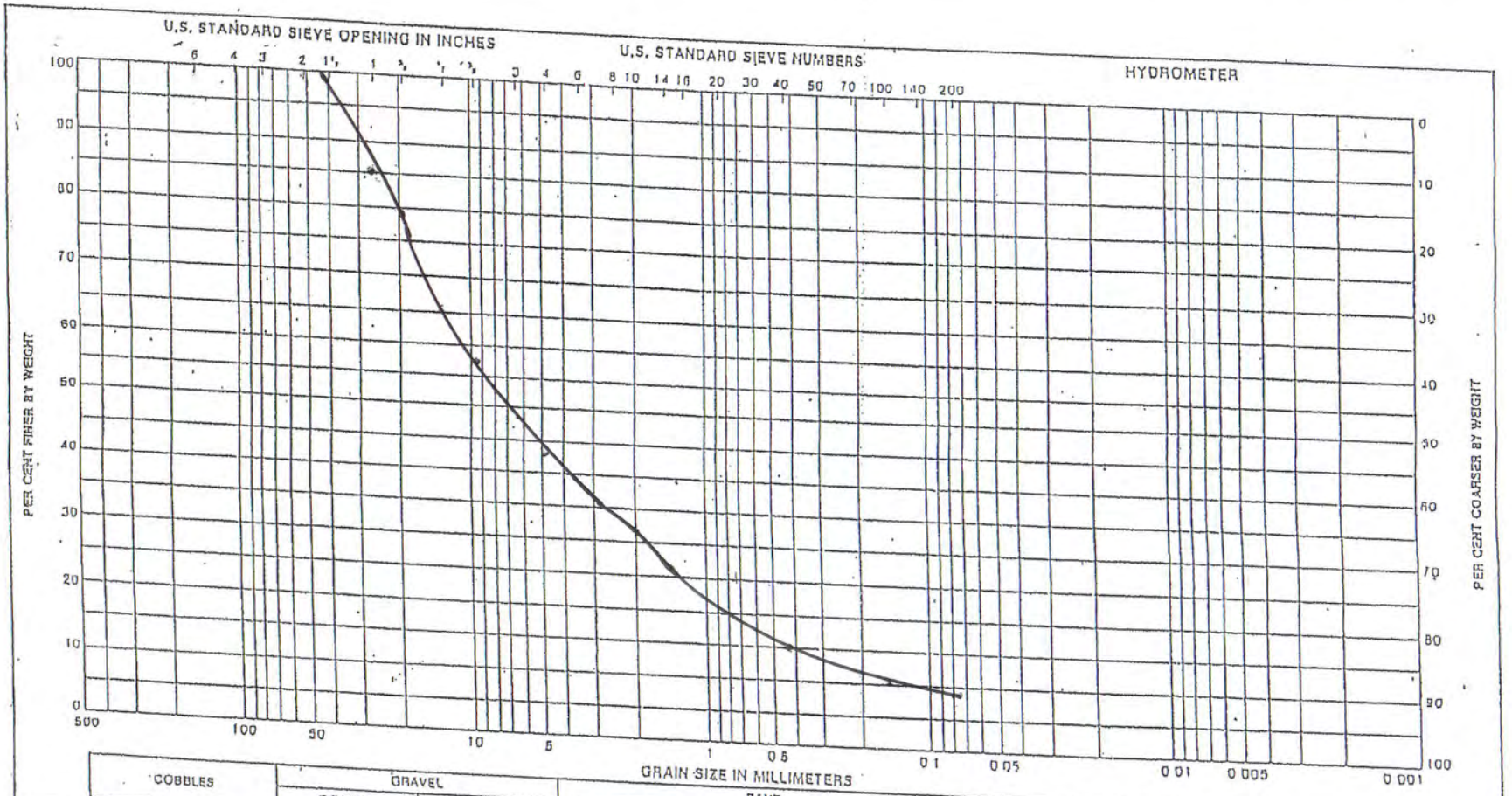

Boring No.	Sample No.	Elev. or Depth	Classification	Natural %	LL	PL	PI	Project
TP #7			GW-GC	11.0	30.5	22.3	8.2	Bivouac Sod Farm
			Well-Graded Gravel					15197 Great Cove Road
			with Clay and Sand					Big Cove Tannery, PA

REPORT OF SOIL ANALYSIS

File No 2200-6

TESTING SERVICES, INC.

1844 Swatara Street
Harrisburg, PA 17104

(717) 441-9720
FAX 441-9721

DAILY FIELD REPORT

Tested for:	Eric Wriglesworth Timber Tech Engineering 22 Denver Road Suite B Denver, PA 17517-	Project:	Bivouac Sow Farm 15197 Great Cove Road, Big Cove Tannery,PA
Date:	Monday, March 31, 2014	Report No:	2200-7

Weather	Sunny
Temperature	45 to 55
Inspector	TSI Laboratory

Type of Inspection Being Performed						
X	Soils				Concrete	
		Foundations				Batch Plant
		Controlled Fill (Compaction)				Placement (Job Site)
	X	Permeability Test				Cylinder Pick-Up
	Asphalt				Other	
		Batch Plant				
		Placement (Job Site)				

Brief Resume of Work Accomplished This Date:
A Constant Head Permeability Test (ASTM D-2434) was performed on a remolded sample that was taken from Test Pit #2 by TSI. The sample was remolded to 95% of its maximum density at 12.8% moisture content. The results of the permeability tests are as follows:

Test 1 - 2.61 x 10-6
Test 2 - 2.04 x 10-6
Test 3 - 2.41 x 10-6

Average - 2.35 x 10-6 cm/sec

:

Respectfully submitted,
Testing Services, Inc.

These test results apply only to the specific location(s) noted and may not represent any other locations or elevations.
Reports may not be reproduced except in full without written permission from Testing Services, Inc.

Gestation Barn - Manure Storage Volume Calculations:

Manure Storage Facility Volume						
Project:	**Bivouac Farm**					
Building ID:	**New Gestation Barn Pit Volume**					
	160'-8"x 767'x 9' Manure Storage					
Volume Calculations						
Pit Area						
	Pit Length	767	ft			
	Pit Width	160.67	ft			
	Pit Depth	9.0	ft			
	Pit gross area	123,234	ft^2			
Void Area						
	# Precast columns	924.0				
	Area per column	0.8	ft^2			
	Total column void area	766.9	ft^2			
	Center wall width	1.00	ft			
	Center wall length	765.34	ft			
	Total center wall void area	765.34	ft^2			
	Total void area	1532.3	ft^2			
Net pit area						
	Net pit area = pit area - void area					
	Net pit area =	121,702	ft^2			
Volume Requirements						
A.	Freeboard				0.5	ft
B.	180 day net precipitation			N/A, Roofed		ft
C.	Rainfall runoff			N/A, Roofed		ft
D.	Solids Accumulation				0.5	ft
			Total Required Depth =		1.0	ft
			Total available depth =		8.0	ft
	Available Volume = Net pit area x Total available depth					
	Available Volume =	973,613	ft^3			
Available Volume in 6" Freeboard =		60,851	ft^3			
		455,164	gal			
Available Volume Summary						
	Available Volume 9' Deep Pit =		973,613	ft^3		
			7,282,626	gal		

Gestation Barn - Total Manure Storage Capacity

Total available manure storage volume from previous page for the new 9' deep pit under barn for the proposed sow unit = **7,282,626 gal**

Gestation Barn - Manure Generation Volume, includes Farrowing Barn (From NMP)

Manure Group Identification	Deep Pit Gestation Barn	
Manure Report Date (note if averaging several reports)	Book	
Laboratory Name	Book	
Manure Type	Swine	
Manure Unit (lbs/ton or 1000 gal)	lb/1000 gal	
Total Nitrogen (N) (lbs/ton or 1000 gal)	18.0	
Ammonium N (NH_4-N) (lbs/ton or 1000 gal)		
Total Organic N (lbs/ton or 1000 gal)		
Total Phosphate (P_2O_5) (lbs/ton or 1000 gal)	18.0	
Total Potash (K_2O) (lbs/ton or 1000 gal)	11.0	
Percent Solids		
PSC Value (Enter analytical or book value)	1.00	
Inventory Method	Calculated	
	Collected Calc.	Uncollected Calc.
Manure Group Identification	Deep Pit Gestation Barn	
Description: Site & Season Applied	All manure from Farrowing and Gestation Barns	
CALCULATED: Total Manure Collected Per Manure Group	10476641	
Unit	Gallons	
RECORDS: Total Manure Collected Per Manure Group		
Unit		
	Collected	Uncollected
Manure Used On-Farm	0	
Units	Gallons	
Manure Allocation Balance	10476641	
Units	Gallons	
Manure Exported	10476641	
Units	Gallons	
Total Rainfall and Runoff	0	

Gestation Barn - Total Manure Generated

Total Manure Generated per year = Gestation Barn + Farrowing Barn (from NMP chart above) = **10,476,641 gal/yr**

Note: This includes all of the farrowing manure produced from the farrowing manure reception pits that drain into this manure storage.

Gestation Barn - Manure Storage Duration

Available storage duration = total storage capacity/manure generated per year

= 7,282,626 gal / 10,476,641 gal/yr = 0.69 yr x 365 day/yr = 251 days or **8.3 months** which is greater than the required 6 month temporary storage capacity.

Gilt Grower Barn - Manure Storage Volume Calculations:

Manure Storage Facility Volume						
Project:	**Bivouac Farm**					
Building ID:	**New Gilt Grower Barn Pit Volume**					
	71'x 338'x 6' Manure Storage					
Volume Calculations						
Pit Area						
	Pit Length	338	ft			
	Pit Width	71	ft			
	Pit Depth	6.0	ft			
	Pit gross area	23,998	ft^2			
Void Area						
	# Precast columns	196.0				
	Area per column	0.8	ft^2			
	Total column void area	162.7	ft^2			
	Divider wall width	0.67	ft			
	Divider wall length	69.67	ft			
	Total divider wall void area	46.68	ft^2			
	Total void area	209.4	ft^2			
Net pit area						
	Net pit area = pit area - void area					
	Net pit area =	23,789	ft^2			
Volume Requirements						
A.	Freeboard				0.5	ft
B.	180 day net precipitation			N/A, Roofed		ft
C.	Rainfall runoff			N/A, Roofed		ft
D.	Solids Accumulation				0.5	ft
			Total Required Depth =		1.0	ft
			Total available depth =		5.0	ft
	Available Volume = Net pit area x Total available depth					
	Available Volume =	118,943	ft^3			
Available Volume Summary						
	Available Volume 6' Deep Pit =		118,943	ft^3		
			889,695	gal		

Gilt Grower Barn - Total Manure Storage Capacity

Total available manure storage volume from previous page for the new 6' deep pit under barn for the proposed sow unit = **889,695 gal**

Gilt Grower Barn - Manure Generation Volume (From NMP)

Manure Group Identification	Deep Pit Gilt Barn	
Manure Report Date (note if averaging several reports)	Book	
Laboratory Name	Book	
Manure Type	Swine	
Manure Unit (lbs/ton or 1000 gal)	lb/1000 gal	
Total Nitrogen (N) (lbs/ton or 1000 gal)	31.0	
Ammonium N (NH_4-N) (lbs/ton or 1000 gal)		
Total Organic N (lbs/ton or 1000 gal)		
Total Phosphate (P_2O_5) (lbs/ton or 1000 gal)	24.0	
Total Potash (K_2O) (lbs/ton or 1000 gal)	22.0	
Percent Solids		
PSC Value (Enter analytical or book value)	1.00	
Inventory Method	Calculated	
	Collected Calc.	Uncollected Calc.
Manure Group Identification	Deep Pit Gilt Barn	
Description: Site & Season Applied	Deep Pit manure from Gilt Barn	
CALCULATED: Total Manure Collected Per Manure Group	934619	
Unit	Gallons	
RECORDS: Total Manure Collected Per Manure Group		
Unit		
	Collected	Uncollected
Manure Used On-Farm	0	
Units	Gallons	
Manure Allocation Balance	934619	
Units	Gallons	
Manure Exported	934619	
Units	Gallons	
Total Rainfall and Runoff	0	

Gilt Grower Barn - Total Manure Generated

Total Manure Generated per year = from NMP chart above = **934,619 gal/yr**

Gilt Grower Barn - Manure Storage Duration

Available storage duration = total storage capacity/manure generated per year

= 889,695 gal / 934,619 gal/yr = 0.95 yr x 365 day/yr = 346 days or **11.5 months** which is greater than the required 6 month temporary storage capacity.

Total On-Site Manure Storage Capacity

Total manure storage capacity = Gestation Barn Storage + Gilt Grower Barn Storage

Total manure storage capacity = 7,282,626 gal + 889,695 gal = 8,172,321 gal

Farrowing Barn - Manure Storage Volume Calculations:

Manure Storage Facility Volume						
Project:	**Bivouac Farm**					
Building ID:	**New Farrowing Barn Reception Pit Volume**					
	120'x 510'x 2' Manure Reception Pit					
Volume Calculations						
Pit Area						
	Pit Length (I.D.)	525.34	ft			
	Pit Width (I.D.)	118.67	ft			
	Pit Depth	2.0	ft			
	Pit gross area	62,342	ft^2			
Void Area						
	# of 3' wide walkways	32.0				
	Area per walkway	356.0	ft^2			
	Total walkway void area	11392.3	ft^2			
	# of 8' wide divider walkways	4.0				
	Area per divider walkway	949.4	ft^2			
	Total divider walkway void area	3797.4	ft^2			
	Total void area	15,190	ft^2			
Net pit area						
	Net pit area = pit area - void area					
	Net pit area =	47,152	ft^2			
Volume Requirements						
A.	Freeboard				0.5	ft
B.	180 day net precipitation			N/A, Roofed		ft
C.	Rainfall runoff			N/A, Roofed		ft
D.	Solids Accumulation				0.25	ft
		Total Required Depth =			0.75	ft
		Total available depth =			1.25	ft
	Available Volume = Net pit area x Total available depth					
	Available Volume =	58,940	ft^3			
Available Volume Summary						
	Available Volume 2' Reception Pit =		58,940	ft^3		
			440,874	gal		

Farrowing Barn – Reception Pit Capacity

Total available manure storage volume from previous page for the existing 2' shallow pit under barn for the proposed sow unit = **440,874 gal**

New Gestation Barn Manure Storage Freeboard Check For Farrowing Reception Pits

This freeboard volume check is included to show that the volume of the farrowing barn reception pits will fit into the freeboard volume of the new gestation barn manure storage. This is only included as an extra factor of safety to confirm no risk of overflowing the gestation barn manure storage in the event that the farrowing reception pits would be mistakenly drained when the gestation barn manure storage is at full capacity. The farrowing barn reception pits will not be drained when there is not sufficient capacity remaining in the gestation barn manure storage to accept the farrowing barn manure and remain below the freeboard level.

From the new gestation barn manure storage volume calculation page, the capacity in 6" of freeboard of the gestation barn manure storage is 455,164 gal.

From the previous page the farrowing barn reception pit volume is 440,874 gal.

Since the manure volume drained from farrowing barn to the new gestation barn manure storage is less than the storage capacity in 6" of freeboard, the manure in the farrowing barn reception pits will fit into the freeboard volume of the gestation barn manure storage.

Concrete Slab Design:

Subgrade Drag Theory Equation, Steel Required:

$A_{stl} = (F*L*W)/(2*F_s)$

F = Friction coefficient = 1.4 (gravel base)
L = Length of slab to free end = 30'
W = Weight of slab (12.5 psf per inch thickness) = 5"(12.5psf/in.) = 62.5 psf
F_s = 0.75 Steel yield strength = 65 ksi*0.75 = 48,750 psi

$A_{stl} = (F*L*W)/(2*F_s)$
A_{stl} = (1.4*30'*62.5 psf)/(2*48,750psi) = 0.027 in^2/ft^2 of slab

(1) Layer of 6x6x6 gauge WWF, A_{stl} = 0.058 in^2/ft^2

PA NRCS Design Guide #11 used as design reference.

Operation and Maintenance Plan:

The proposed under barn waste storage facilities were designed to store waste from the proposed swine operation for a minimum six-month storage period. If animal numbers or waste contribution is planned to increase, re-evaluate the nutrient management plan to determine feasibility. Do not increase waste contribution to a point that waste cannot be managed properly and according to an approved nutrient management plan.

Inspections and maintenance are required to achieve the intended function, benefits, and life of the waste storage facilities. The operator is responsible to establish and implement an inspection and maintenance program.

Items to inspect and maintain during the design life of the waste storage facilities include, but are not limited to, the following:

1. Inspect the exterior of the barns and surrounding grades after significant storm events and at least annually to identify repair and maintenance needs.

2. Follow the nutrient management plan for this farm.

3. Do not dispose of dead animals or other wastes in the waste storage facilities.

4. Check backfill areas around the concrete waste storage structures often for any unusual settlement. If found, contact an engineer to determine the cause of settlement.

5. A good vegetative cover of recommended grasses should be maintained on backfill around the waste storage structures. If the vegetative cover is damaged it should be re-established as soon as possible. The vegetative cover should be mowed at least twice a year, where possible, to stimulate a vigorous plant growth.

6. Observation wells which contain outlets from the foundation/leak detection drains should be checked frequently and kept open. The outflow from these drains should be checked when the storage is being used for the odor or visual presence of manure. In the event of manure presence, repairs should be planned and made immediately.

7. Inspect haul roads and approaches to and from the waste storage facilities frequently to determine the need for replacement stone or other stabilizing materials.

8. All appurtenances - pipes, pumps, manure pumps, valves, gates, etc., should be inspected periodically (minimum of twice a year) to make sure they are functional, structurally sound, and are not cracked, broken, and/or a safety hazard to the operator or livestock. Repair as needed.

9. Check frequently for burrowing animals around the exterior of the waste storage facilities. When found, remove the burrowing animals, replace embankment materials, and reseed.

10. Waste storage structure warning signs should be clearly posted and maintained. These signs should state the type of structure and the dangers of entering potentially hazardous air space or of drowning.

11. Do not operate trucks, manure spreaders, or other heavy equipment within five feet of the waste storage facility walls, except at pump-out locations.

12. The manure levels in the waste storage facilities shall always have at least 6" of freeboard. If manure levels reach this height, then manure liquids shall be pumped out and land applied as per the approved nutrient management plan.

13. A staff gage that clearly marks one-foot increment depths of the waste storage facilities shall be installed and maintained.

14. Any manure drippage from the loading areas shall be cleaned up daily with an absorbent material.

ASCE 7 LOAD CALCULATIONS

PROJECT: ME011A-19 Gestation Barn

Length parallel to Ridge, ft	B	767
Length Normal to Ridge, ft	L	160.7
Wall Height, ft	z	6

VELOCITY PRESSURE, q_h

Design Method:	Envelope Procedure		Nominal height of Atmospheric Boundary	Z_g	900
Code Standard:	ASCE 7-10		3-s Gust Speed Power Law Exponent	α	9.5
Ultimate Wind Speed, mph	V	105	Velocity Pressure Exp. Coefficient	K_z	0.86
Building Midheight, ft	h	16.044	Wind Directionality Factor	K_d	0.85
Risk Category		I	Topographic Factor	K_{zt}	1
Exposure Category		C			
Velocity Pressure, psf	q_h	**20.7**			

MWFRS - LOW RISE BUILDINGS - ENVELOPE PROCEDURE - LOAD CASE A - (PERPENDICULAR TO RIDGE)

Velocity Pressure, q_h	**20.7**	(see Velocity Pressure Calculations)	
Windward Roof Pitch (x/12)	3	14.04	(deg)
Leeward Roof Pitch (x/12)	3	14.04	(deg)
Width of Pressure Coefficiant Zone, a	6.428	ft	
Enclosure Classification	Enclosed Building		

Building Surface (ASCE 7-10 Figure 28.4-1)

	Windward		Leeward		Windward (Edge)		Leeward (Edge)	
	Wall	Roof	Roof	Wall	Wall	Roof	Roof	Wall
θ	1	2	3	4	1E	2E	3E	4E
0-5	0.4	-0.69	-0.37	-0.29	0.61	-1.07	-0.53	-0.43
20	0.53	-0.69	-0.48	-0.43	0.80	-1.07	-0.69	-0.64
30-45	0.56	0.21	-0.43	-0.37	0.69	0.27	-0.53	-0.48
90	0.56	0.56	-0.37	-0.37	0.69	0.69	-0.48	-0.48
GC_{pf}	0.48	-0.69	-0.44	-0.37	0.72	-1.07	-0.63	-0.56
GC_{pi}	**DESIGN WIND PRESSURES**							
-0.18	**13.6**	**-10.5**	**-5.3**	**-4.0**	**18.7**	**-18.4**	**-9.2**	**-7.8**
0.18	**6.2**	**-18.0**	**-12.7**	**-11.5**	**11.2**	**-25.8**	**-16.7**	**-15.2**
0	**9.9**	**-14.3**	**-9.0**	**-7.7**	**15.0**	**-22.1**	**-12.9**	**-11.5**

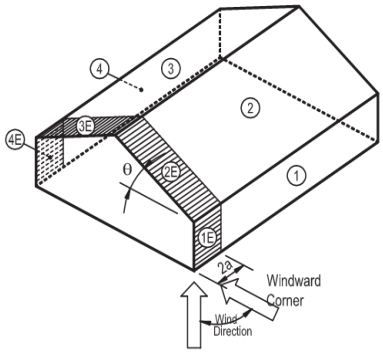

ASCE 7

MWFRS - LOW RISE BUILDINGS - ENVELOPE PROCEDURE - LOAD CASE B - (PARALLEL TO RIDGE)

Velocity Pressure, q_h	20.7	(see Velocity Pressure Calculations)
Enclosure Classification	Enclosed Building	

Building Surface (ASCE 7-10 Figure 28.4-1)

	Side 1		Side 2		Wind.	Leewrd.
	Wall	Roof	Roof	Wall	Wall	Wall
	1	2	3	4	5	6
GC_{pf}	-0.45	-0.69	-0.37	-0.45	0.40	-0.29
GC_{pi}	**DESIGN WIND PRESSURES**					
-0.18	**-5.6**	**-10.5**	**-3.9**	**-5.6**	**12.0**	**-2.3**
0.18	**-13.0**	**-18.0**	**-11.4**	**-13.0**	**4.5**	**-9.7**
0	**-9.3**	**-14.3**	**-7.6**	**-9.3**	**8.3**	**-6.0**

	1E	2E	3E	4E	5E	6E
GC_{pf}	-0.48	-1.07	-0.53	-0.48	0.61	-0.43
GC_{pi}	**DESIGN WIND PRESSURES**					
-0.18	**-6.2**	**-18.4**	**-7.2**	**-6.2**	**16.3**	**-5.2**
0.18	**-13.6**	**-25.8**	**-14.7**	**-13.6**	**8.9**	**-12.6**
0	**-9.9**	**-22.1**	**-10.9**	**-9.9**	**12.6**	**-8.9**

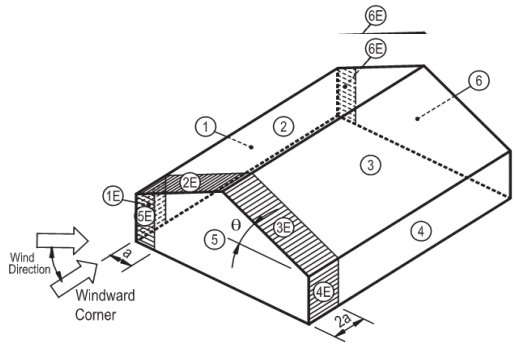

ASCE 7

C&C - LOW-RISE ENCLOSED & PART. ENCLOSED BUILDINGS - CHAPTER 30

Velocity Pressure, q_h	**20.7**	(see Velocity Pressure Calculations)	
Roof Pitch (rise per 12 units of run)	3	14.04	(deg)
Effective Roof Wind Area	8	ft^2	
Effective Wall Wind Area	16	ft^2	
Width of Pressure Coefficiant Zone, a	6.428	ft	
Enclosure Classification	Enclosed Building		

	Positive		Negative	
θ \ zone	4	5	4	5
0-10	0.873	0.873	-0.954	-1.206
>10	1.0	1.0	-1.06	-1.34
GC_p	1.0	1.0	-1.1	-1.3
GC_{pi}	**Design Wind Pressure**			
-0.18	23.8	23.8	-18.2	-24.0
0.18	16.3	16.3	-25.6	-31.4
0	20.0	20.0	-21.9	-27.7

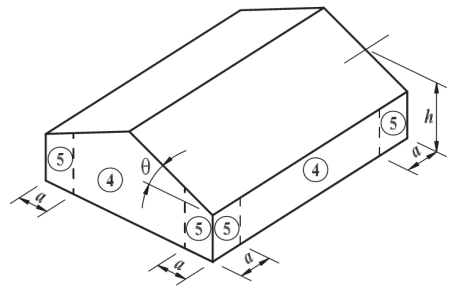

ASCE 7-10 Figure 30.4-1

	Positive	Negative		
θ \ zone	1,2&3	1	2	3
≤ 7	0.30	-1.0	-1.8	-2.8
7<θ≤27	0.50	-0.9	-1.7	-2.6
27<θ≤45	0.90	-1.00	-1.20	-1.20
GC_p	0.5	-0.9	-1.7	-2.6
GC_{pi}	**Design Wind Pressure**			
-0.18	14.0	-14.9	-31.40	-50.0
0.18	6.6	-22.3	-38.8	-57.4
0	10.3	-18.6	-35.1	-53.7

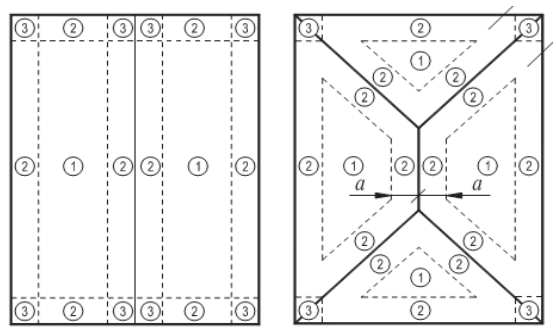

ASCE 7-10 Figure 30.4-2B

ROOF DEAD LOAD

Top Chord of Truss	5.0	psf
Bottom Chord of Truss	5.0	psf
Total Roof Dead Load	**10.0**	**psf**

MINIMUM ROOF LIVE LOAD

Top Chord of Truss	20.0	psf
Bottom Chord of Truss	0.0	psf
Total Roof Live Load	**20.0**	**psf**

ROOF SNOW LOAD CALCULATIONS (GABLE & HIP ROOFS)

SLOPED ROOF SNOW LOAD

Ground Snow Load, p_g	30	psf		Exposure of Roof	Partially Exposed
Roof Pitch	3	14.04	deg	Roof Obstructions:	All Other Roofs
Distance from Ridge to Eave, W	81.35	ft		Terrain Category	C
Risk Category	I			Exposure Factor, C_e	1.0
Flat Roof Snow Load, p_f	20.2	psf		Thermal Factor, C_t	1.2
Balanced, Sloped Roof Snow Load, p_s	**20.2**	**psf**		Sloped Roof Factor, C_s	1
USE	**30.0**	**psf**		Snow Importance Factor	0.8

UNBALANCED SNOW LOAD

				Roof slope run for a rise of 1, S	4.0
Unbalanced Windward Snow Load	**6.048**	**psf**		γ, pcf	17.9
Unbalanced Leeward Snow Load	**48.6**	**psf 17 ft from ridge, then 20.16 psf**		h_d, ft	3.18

SEISMIC LOAD CALCULATIONS - EQUIVALENT LATERAL FORCE PROCEDURE

Spectral Response Acceleration, S_S	0.12	Site Class	D
Spectral Response Acceleration, S_1	0.06	Response Modification Factor, R	7
Height to Highest Level of SFRS (ft), h_n	16.044	Deflection Amplification Factor, C_d	4.5
Structure Type	*All other structural systems*	Redundancy Factor, *ρ (12.3.4)*	1.3
Risk Category	I	Weight of structure (lbs), W	1E+06
Importance Factor, I_e	1	Effective Weight of Snow (lbs)	740002
Seismic Design Category based on S_{DS}	A	Effective Seismic Weight (lbs)	2E+06
Seismic Design Category based on S_{D1}	B		
Seismic Design Category based on S_1	N/A		

Site Coefficient, F_a and F_v

	S_s						S_1				
	0.25	0.5	0.75	1	1.25		0.1	0.2	0.3	0.4	0.5
A	0.8	0.8	0.8	0.8	0.8	A	0.8	0.8	0.8	0.8	0.8
B	1	1	1	1	1	B	1	1	1	1	1
C	1.2	1.2	1.1	1	1	C	1.7	1.6	1.5	1.4	1.3
D	1.6	1.4	1.2	1.1	1	D	2.4	2	1.8	1.6	1.5
E	2.5	1.7	1.2	0.9	0.9	E	3.5	3.2	2.8	2.4	2.4
F_a	1.6	0	0	0	0	F_v	2.4	0	0	0	0

S_{ms}	0.19	S_{DS}	0.13	C_t	0.02	T_a	0.1603
S_{m1}	0.14	S_{D1}	0.10	x	0.75	C_s	0.02

Seismic Base Shear, V	**36084**	**lbs**	(whole building)
Horizontal Seismic Load Effect, E_h	**46909**	**lbs**	(whole building)
Vertical Seismic Load Effect, E_v	**31573**	**lbs**	(whole building)

BUILDING DIAPHRAGM, ENDWALLS, AND DEFLECTIONS - PERPENDICULAR TO RIDGE

WIND PERPENDICULAR TO RIDGE

Method Developed by Patrick M. McGuire, P.E.

BUILDING INPUTS:			**COLUMN INPUTS:**	**Pinned base - no knee brace**	
Building Width, W	160.7	(ft)	Columns Per Frame	2	
Building Length, L	368	(ft)	Column Spacing, S	4	(ft)
Height at Eave, H	6	(ft)	Column Width, w	3	(in)
Roof Pitch	3	:12	Column Depth, d	5.5	(in)
			Modulus Of Elasticity	1600000	(psi)
ROOF AND ENDWALL INPUTS			**PANEL INPUTS**		
1st Endwall Door Openings	0	(ft)	Model Diaphragm Shear Stiffness, c	2900	lb/in
Is there a Structural Interior Liner?	No		Dimension Normal to Load, a	9	(ft)
2nd Endwall Door Openings	0	(ft)	Dimension Parallel to Load, b	12	(ft)
Is there a Structural Interior Liner?	No		ROOF: Allowable Shear per Layer, V_a	110	(lbs/ft)
Is there a Structural Ceiling?	No		WALLS: Allowable Shear per Layer, V_a	110	(lbs/ft)
OPTIONAL: *(enter to override calculated values)*			**LOADING INPUTS:**	ASCE 7-10	
Stiffness of 1st Endwall		lb/in	Windward Wall Pressure	6.2	(psf)
Stiffness of 2nd Endwall		lb/in	Windward Roof Pressure	-18.0	(psf)
Roof Diaphragm Stiffness		lb/in	Leeward Roof Pressure	-12.7	(psf)
Interior Frame Stiffness	0	lb/in	Leeward Wall Pressure	-11.5	(psf)
INTERMEDIATE CALCULATIONS:			**FINAL RESULTS:**		
Frame Stiffness	0	lb/in	Shear at 1st endwall, Ve_2	5824	(lbs)
1st Endwall Stiffness	58254	lb/in	Shear at 2nd endwall, Ve_2	5824	(lbs)
2nd Endwall Stiffness	58254	lb/in	Roof Diaphragm Shear at 1st Endwall	6003	(lbs)
Diaphragm Stiffness	82897	lb/in	Roof Diaphragm Shear at 2nd Endwall	6003	(lbs)
Ulitmate Wind Resultant at Eave	211	lbs	Deflection at 1st Endwall, y_3	0.10	(in)
Wind Load Multiplier	0.6		Deflection at 2nd Endwall, y_4	0.10	(in)
Resultant at Eave (ASD Level)	127	lbs	Max Frame Deflection	1.72	(in)
Constants: A = -126600 B = 639.62		α = 0.000	Restraining Force at Max Deflection	127	(lbs)

ACTUAL VS ALLOWABLE (LBS)

COMPONENT	ACTUAL		ALLOWABLE	
Shear at 1st Endwall	5824	<	17677	**OK**
Shear at 2nd Endwall	5824	<	17677	**OK**
Roof Diaphragm Shear at 1st Endwall	6003	<	18221	**OK**
Roof Diaphragm Shear at 2nd Endwall	6003	<	18221	**OK**

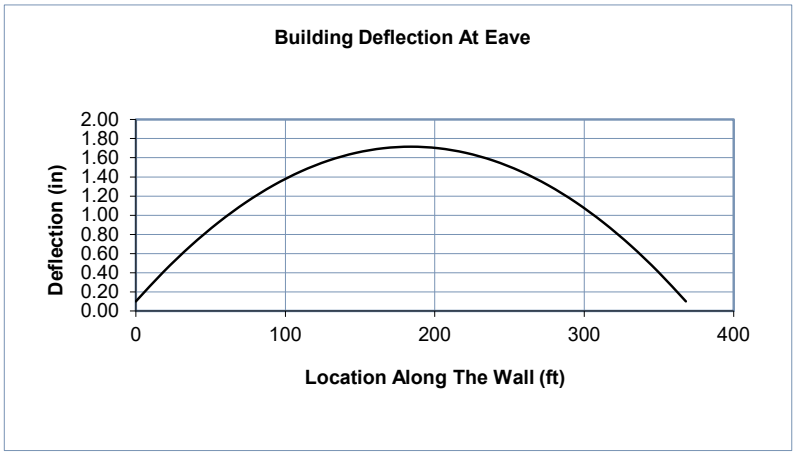

EAVE DEFLECTION

(%)	(ft)	(in)	Δ (in)
0	0	0	0.10
5	18.4	220.8	0.41
10	36.8	441.6	0.68
15	55.2	662.4	0.92
20	73.6	883.2	1.13
25	92	1104	1.31
30	110.4	1324.8	1.46
35	128.8	1545.6	1.57
40	147.2	1766.4	1.65
45	165.6	1987.2	1.70
50	184	2208	1.72
55	202.4	2428.8	1.70
60	220.8	2649.6	1.65
65	239.2	2870.4	1.57
70	257.6	3091.2	1.46
75	276	3312	1.31
80	294.4	3532.8	1.13
85	312.8	3753.6	0.92
90	331.2	3974.4	0.68
95	349.6	4195.2	0.41
100	368	4416	0.10

LOAD PARALLEL TO RIDGE - DESIGN OF SIDEWALLS

BUILDING INPUTS:		
Building Width, W	160.7	(ft)
Building Length, L	767	(ft)
Height at Eave, H	6	(ft)
Top Chord Pitch Side 1	3	:12
Top Chord Pitch Side 2	3	:12
Bottom Chord Pitch Side 1	0	:12
Bottom Chord Pitch Side 2	0	:12

LOADING INPUTS:	ASCE 7-10	
Windward Wall Pressure	4.5	(psf)
Leeward Wall Pressure	-9.7	(psf)

INTERMEDIATE CALCULATIONS:		
Stiffness of Sidewall 1	131588	lb/in
Stiffness of Sidewall 2	131588	lb/in
Truss Area	1614	ft^2
Upper Wall Area	482	ft^2
Lower Wall Area	482	ft^2
Effective Wind Area	2096	ft^2
Load on Building (ASD Level)	17924	lbs

WALL ENCLOSURE INPUTS:		
Structural Liner in Sidewall 1	No	
Structural Liner in Sidewall 2	No	
Gable (triangle)	Sheathed	
Wall Below Gable	Sheathed	
Endwall	Shear Wall	
Openings in Sidewall 1	404	ft
Openings in Sidewall 2	404	ft

COLUMN SUPPORT CONDITIONS:		
Column Support at Grade	Pinned	
Column Support at Ceiling	Restricted	
Column are always restricted at roof line		

SHEATHING PANEL INPUTS		
Model Diaphragm Shear Stiffness, c	2900	lb/in
Dimension Normal to Load, a	9	(ft)
Dimension Parallel to Load, b	12	(ft)
Allowable Shear per Layer, V_a	110	(lbs/ft)

FINAL RESULTS:		
Shear at Sidewall 1	8962	(lbs)
Shear at Sidewall 2	8962	(lbs)
Deflection at Sidewall 1	0.07	(in)
Deflection at Sidewall 2	0.07	(in)

ACTUAL VS ALLOWABLE (LBS)

	ACTUAL		ALLOWABLE	
Shear at Sidewall 1	8962	<	39930	**OK**
Shear at Sidewall 2	8962	<	39930	**OK**

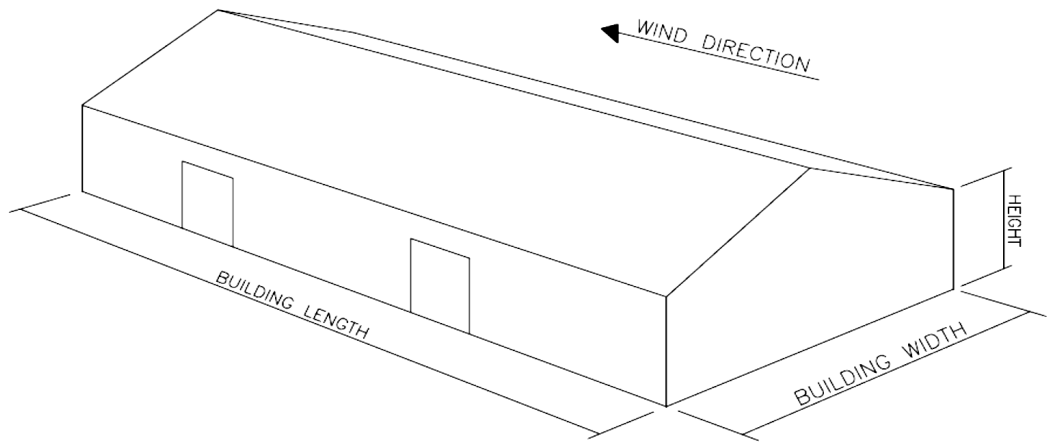

Gestation Perimeter Wall, 10" Thick x 9'

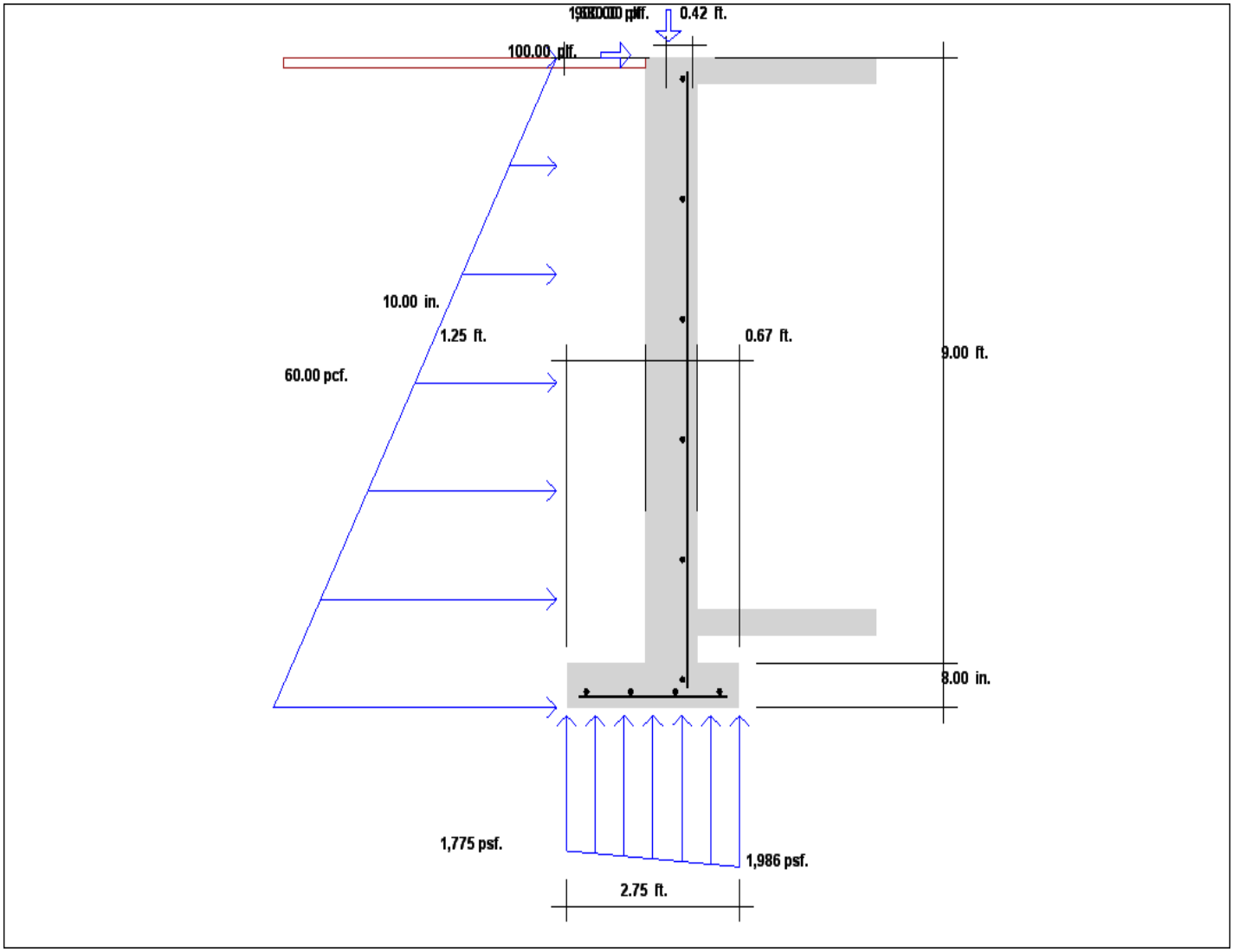

QuickWall 9.0 - RETAINING WALL ANALYSIS AND DESIGN

Job ID : Bivouac Farm
Job Description : 9' Gestation Perimeter Wall Designed By :

FOOTING DESIGN METHOD: Ultimate Strength ACI 318-14
STEM DESIGN METHOD : Ultimate Strength ACI 318-14 (Concrete)
WALL TYPE : Basement Wall, restricted against sliding

RETAINING WALL DIMENSIONS:

Wall Stem Height		=	9.00 ft.		
Stem Thickness @ Top		=	10.00 in.		
Stem Thickness @ Bottom		=	10.00 in.		
Footing Thickness		=	8.00 in.		
Heel Width	Min.	=	1.25 ft.	Design Heel Width =	1.25 ft.
	Max.	=	20.00 ft.		
Toe Width	Min.	=	0.50 ft.	Design Toe Width =	0.67 ft.
	Max.	=	10.00 ft.		
Footing Key Depth		=	0.00 ft.	Design Key Depth =	0.00 ft.
Footing Key Width		=	0.00 ft.	Design Key Width =	0.00 ft.
BackFill Slope (Vert/Horiz)		=	0.00 :12		

RETAINING WALL LOADS:

Horizontal Equivalent Fluid Pressure	=	60.00 pcf.	(Load Case = Soil)
Backfill Height	=	9.00 ft.	
Equivalent Fluid Pressure Angle	=	N/A deg.	
Vertical Surcharge on Backfill	=	0 psf.	(Load Case = Soil)
Horizontal Surcharge	=	0 psf.	(Load Case = Soil)
Vertical Surcharge on Toe	=	0 psf.	(Load Case = Soil)
Wind Load on Fence	=	0 psf.	(Load Case = Wind)
Fence Height	=	0.00 ft.	

Line No.	Ld. Type (H or V)	Magnitude (plf)	Dist. (x) (ft.)	Load Case
1	V	1,680.00	0.42	Roof
2	H	100.00	0.00	Wind
3	V	900.00	0.42	Live
4				
5				
6				
7				
8				
9				
10				

Notes: 1. "H" = Horizontal loads. "V" = Vertical loads.
2. Vertical loads are positive down.

ULTIMATE STRENGTH LOAD COMBINATIONS (Concrete Design):

1.4D + 1.4H
1.2D + 1.6L + 1.6H + 0.5R
1.2D + 1.6R + 1.6H + 1.0L
1.2D + 1.6R + 1.6H + 0.5W
1.2D + 1.0W + 1.0L + 0.5R
1.2D + 1.0E + 1.0L + 1.6H + 0.2R
0.9D + 1.0W + 1.6H
0.9D + 1.0E + 1.6H

WORKING STRESS LOAD COMBINATIONS (Stability Checks and Masonry Design):

D + L + R + H
D + L + 0.6W + H
D + L + 0.6W + 0.5R + H
D + L + R + 0.3W + H
D + L + R + E/1.4 + H
D + E/1.4 + H

```
RETAINING WALL RESISTING FORCES:
------------------------------------
Allowable Soil Pressure         =  2,000 psf.
Passive Equivalent Fluid Press. =    N/A
Passive Soil Height             =    N/A
Coefficient of Friction         =    N/A
Cohesion                        =    N/A

Use Vertical Surcharge as Resisting Wt.? =    N/A

Overturning Safety Factor       =    N/A
Sliding Safety Factor           =    N/A
Limit Reaction to Mid 1/3?      =    N/A


MATERIAL DATA:
------------------------------------
Concrete Strength, f'c      =   4.00 ksi.
Steel Yield Strength, Fy    =  60.00 ksi.

Concrete Unit Weight        = 145.00 pcf.
Soil Unit Weight            = 110.00 pcf.
Fence Weight                =  10.00 psf.


REINFORCING STEEL DATA:
------------------------------------
Concrete cover to center of steel:
          Wall Outside Face =   5.00 in.
 Footing Heel (Bottom Face) =   5.00 in.
  Footing Toe (Bottom Face) =   5.00 in.

Minimum Ratios for Shrinkage and Temperature Reinf:
       Vertical Stem Reinf. = 0.0012
     Horizontal Stem Reinf. = 0.0020
      Footing Reinforcement = 0.0012
```

```
*************************************************
       S U M M A R Y   O F   R E S U L T S
*************************************************
```

DIMENSIONS:

Stem Height	= 9.00 ft.	Heel Length	= 1.25 ft.
Stem Thick. @ Top	= 10.00 in.	Toe Length	= 0.67 ft.
Stem Thick. @ Base	= 10.00 in.	Total Ftg. Width, B	= 2.75 ft.
Footing Thickness	= 8.00 in.	Key Depth	= 0.00 ft.
		Key Width	= 0.00 ft.

ANALYSIS RESULTS:

Max Brg Press. @ Toe	= 1,986 psf.	Sliding Force	= 0 Lb
@ Heel	= 1,775 psf.	Resisting Force	= N/A
Allowable Brg. Press.	= 2,000 psf.	F.O.S.	= N/A
Resultant Loc From C.L.	= 0.03 ft.	Overturn. Moment	= 0 ft-lb
Kern Point Loc., B/6	= 0.46 ft.	Resisting Moment	= 6,977 ft-lb
Limit Resultant To Mid 1/3?	= N/A	F.O.S.	= N/A

DESIGN RESULTS: Design Method, Stem: USD, ACI 318-14 (Concrete)
Ftg.: Ultimate Strength ACI 318-14

	d (in.)	Mu (ft-k)	Vu (kip)	Phi Vn (kip)	As Flex. (in^2)	As Min. (in^2)	As T+S (in^2)
Stem :	5.00	0.20	2.61	5.69	0.075	0.012	0.219
Toe :	3.00	0.56	1.05	3.42	0.042	0.056	0.115
Heel :	3.00	-0.75	-1.25	3.42	0.057	0.075	0.115
Key :	0.00	0.00	0.00	0.00	0.000	0.000	0.000

Notes: 1. Stem moments are positive if they cause tension on the soil face. Negative if they cause tension on the outside face. Stem shear is positive to the left as measured on a section cut below the top of wall.

2. Heel moments are positive if they cause tension in the top of the footing. Heel shear is positive up as measured on a section cut to the right of the end of the heel.

3. Toe moments are positive if they cause tension in the bottom of the footing. Toe shear is positive up as measured on a section cut to the left of the end of the toe.

```
*************************************************
 S T A B I L I T Y   A N A L Y S I S   R E P O R T
*************************************************

-------------------------------------------------------------------------------
Stability Analysis: Governing Combination = D + L + R + H

----------RESISTING FORCES---------     ---------OVERTURNING FORCES---------
Element    Weight  x  Arm  = Moment     Element      Force  x  Arm  = Moment
Soil        1,238            2,630     R at Top      -796    9.67    -7,695
Ftg.          266    1.38      366     R at Bot.   -2,007    0.67    -1,338
Stem        1,088    1.08    1,178     Horiz. EFP   2,803    3.22     9,033
Vert Sur                               Vert Sur
Vert EFP                               Horiz Sur
Toe Sur.                               Wind
Fence Wt.                              Horiz line
V. line     2,580            2,804     Vert. line
          --------         --------                --------         --------
Sum WT =    5,171    MR =    6,977     Sum F =          0   MOT =         0

-------------------------------------------------------------------------------

Friction Force        =    N/A        F.O.S. Sliding    =   RF / F =    N/A
Passive Pressure      =    N/A        F.O.S. Overturn.  = MR / MOT =    N/A
Cohesion              =    N/A
                         --------          Coef. Vert. Surcharge or Line Load
Resist. Force, Sum RF =      N/A           to Horiz. = EFP / Soil Dens. =  0.545

-------------------------------------------------------------------------------

Resultant Loc From Toe,      X = (MR - MOT) / Sum WT     =    1.35 ft.
Eccentricity From Ftg. C.L., e = (B / 2) - X             =    0.03 ft.

Soil Pressure @ Toe            = (WT / B) * (1 + 6e/B)   =   1,986 psf.
Soil Pressure @ Heel           = (WT / B) * (1 - 6e/B)   =   1,775 psf.
```

```
*************************************************
   D E T A I L E D   D E S I G N   R E P O R T
*************************************************
```

STEM DESIGN: Steel Design Comb = 0.9D + 1.0W + 1.6H
Shr Strength @ Base, Phi Vn = 5.69 kip

Dist From Top (ft)	d (in.)	Mu (ft-k)	Vu (kip)	As Flex. (in^2)	As Min. (in^2)	As T+S (in^2)	As Reqd (in^2)	Comb
0.90	5.00	-1.13	-1.23	0.051	0.068	0.144	0.144	2
1.80	5.00	-2.20	-1.12	0.099	0.132	0.144	0.144	2
2.70	5.00	-3.12	-0.92	0.142	0.189	0.144	0.189	2
3.60	5.00	-3.84	-0.65	0.175	0.200	0.144	0.200	2
4.50	5.00	-4.27	-0.30	0.196	0.200	0.144	0.200	2
5.40	5.00	-4.36	0.13	0.200	0.200	0.144	0.200	7
6.30	5.00	-4.02	0.63	0.184	0.200	0.144	0.200	2
7.20	5.00	-3.20	1.21	0.145	0.194	0.144	0.194	7
8.10	5.00	-1.81	1.88	0.082	0.109	0.144	0.144	7
9.00	5.00	0.20	2.61	0.075	0.012	0.219	0.219	7

Vertical Stem Reinforcement:
Shear-Friction Steel Added at Stem Base (ACI 14 22.9), Avf = 0.075 in^2
Available Length for Hook Embedment into Footing = 3.50 in.
Available Length for Straight Embedment into Stem = 106.00 in.

	Development Length Straight (in.)	Hook (in.)	Percent Develop.	Spac. (in.)	50% Cut Off (in.)
#4				10.95	
#5				16.98	
#6				18.00	
#7				18.00	
#8				18.00	
#9				18.00	
#10				18.00	
#11				18.00	

Horizontal Stem Reinforcement:
Area of steel for Shrinkage and Temp. Reinforcement = 0.240 in^2

	-----Spacing, in.----- I.F. Only	EA. Face	------Total Bars------ I.F. Only	EA. Face
#4	10.00	18.00	12.00	7.00
#5	15.50	18.00	8.00	7.00
#6	18.00	18.00	7.00	7.00
#7	18.00	18.00	7.00	7.00
#8	18.00	18.00	7.00	7.00
#9	18.00	18.00	7.00	7.00
#10	18.00	18.00	7.00	7.00
#11	18.00	18.00	7.00	7.00

TOE DESIGN:

* Steel Design Comb. = 1.2D + 1.6R + 1.6H + 1.0L
* Thickness Design Comb. = 1.2D + 1.6R + 1.6H + 1.0L
* Available Length for Hook Embedment into Stem = 5.50 in.
* Available Length for Straight Embed. into Toe = 6.00 in.

d (in.)	Mu (ft-k)	Vu (kip)	Phi Vn (kip)	As Flex. (in^2)	As Min. (in^2)	As T+S (in^2)	As Req'd (in^2)
3.00	0.56	1.05	3.42	0.042	0.056	0.115	0.115

	Development Length Straight (in.)	Hook (in.)	Percent Develop.	Spac. (in.)
#4				18.00
#5				18.00
#6				18.00
#7				18.00
#8				18.00
#9				18.00
#10				18.00
#11				18.00

HEEL DESIGN:

* Steel Design Comb. = 1.2D + 1.6R + 1.6H + 1.0L
* Thickness Design Comb. = 1.2D + 1.6R + 1.6H + 1.0L
* Available Length for Straight Embedment into Toe = 16.00 in.
* Available Length for Straight Embedment into Heel = 13.00 in.

d (in.)	Mu (ft-k)	Vu (kip)	Phi Vn (kip)	As Flex. (in^2)	As Min. (in^2)	As T+S (in^2)	As Req'd (in^2)
3.00	-0.75	-1.25	3.42	0.057	0.075	0.115	0.115

	Development Length Straight (in.)	Hook (in.)	Percent Develop.	Spac. (in.)
#4				18.00
#5				18.00
#6				18.00
#7				18.00
#8				18.00
#9				18.00
#10				18.00
#11				18.00

LONGITUDINAL FOOTING REINFORCEMENT (TEMP & SHRINK ONLY):

	Spacing (in.)
#4	20.83
#5	32.29
#6	45.83
#7	62.50
#8	82.29
#9	104.17
#10	132.29
#11	162.50

DESIGN OF BEAM POCKET IN CONCRETE WALL

ACI 318-14 Section 11.11.2.1

LOADING		
Wall height to top of beam, H_w	9	ft
Backfill height, H_f	9.0	ft
Tributary width, W_T	10	ft
Equivalent fluid density, EFD	45	psf/ft
Horizontal soil pressure at bottom of wall, p_{max}	405	psf
Resultant Force, $R = W_T p_{max} H_f / 2$	18225	lbs
Factored Beam Axial Force, $P_u = V_u = 1.6RH_f / (3H_w)$	**9720**	lbs

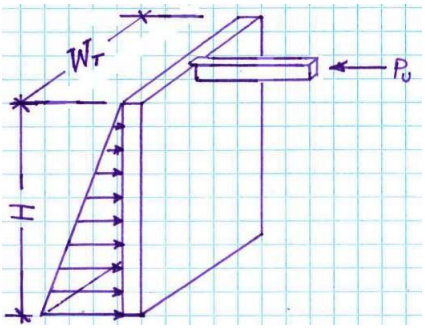

GEOMETRY AND CONCRETE PROPERTIES		
Wall thickness, t_w	10.0	in
Pocket depth, d_p	4.0	in
Wall thickness behind pocket, t_p	6.0	in
Beam width, b	8.0	in
Beam height, h	10.0	in
Dimension d to wall far rebar	6	in
Ratio β = h/b if h>b and β = b/h if b>h	1.25	in
Wall concrete compressive strength, f'_c	4000	psi
Constant α_s	30	

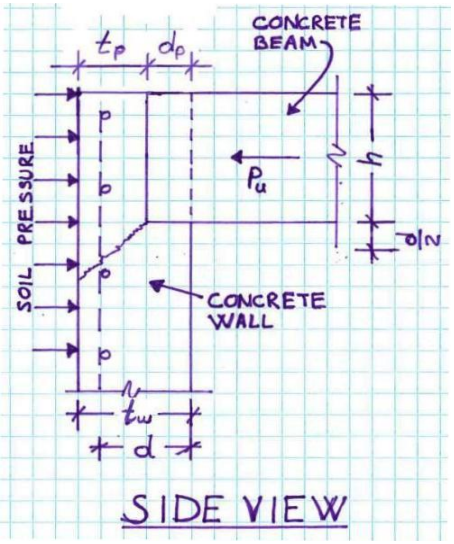

SHEAR STRENGTH REDUCTION FACTOR		
φ	0.75	

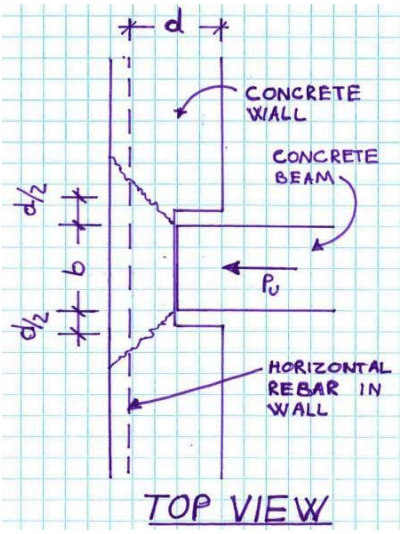

	INTERMEDIATE CALCULATIONS		
	$b_o = 2(d-d_p+h)+b$ (3 sides only)	40.0	in
	$b_o(d-d_p)\sqrt{f'_c}$	5060	lbs
	DESIGN PUNCHING-SHEAR STRENGTH		
a	$\varphi V_c = (2+4/\beta)b_o(d-d_p)\sqrt{f'_c}$	19733	lbs
b	$\varphi V_c = (\alpha_s d/b_o+2)b_o(d-d_p)\sqrt{f'_c}$	24666	lbs
c	$\varphi V_c = 4b_o(d-d_p)\sqrt{f'_c}$	15179	lbs
	φV_c (controlling)	**15179**	**lbs**

SUMMARY	
φVc > Vu	**[OK]**

DESIGN CALCULATIONS FOR THE BOND BEAM (Between Beam Pockets)

ACI 318-14

STATUS: ALL REQUIREMENTS ARE SATISFIED

SECTION 1: RESULTS FROM VISUAL ANALSYIS REPORT

Maximum Factored Bending Moment, M_u	11340	lb-ft
Maximum Factored Shear Load, V_u	5994	lb
Maximum Live Load Deflection, Δ_L	0.06	in
Maximum Total Load Deflection, Δ_T	0.12	in

SECTION 2: GENERAL INFORMATION

Beam Height, h	6	in	
Beam Width, b	18	in	
Concrete Cover, t_c	2	in	
The diameter of rebar, d_b	0.5	in	
Spacing of rebar, s	2	in	
Distance from top of beam to center of rebar, d	3.75	in	$d = h-(t_c+d_b/2)$
Total Tension Steel Area, A_s	1.20	in^2	(6) #4
Minimum yield strength of rebar, f_y	60000	psi	
Compressive strength of concrete, f_c'	4000	psi	
Parameter β_1	0.85		(ACI 318, Section 10.2.7.3)
Depth of equivalent rectangular stress block, a	1.176	in	$a = A_s f_y / (0.85 f'_c b)$
Distance from top of panel to NA, c	1.384	in	$c = a/\beta_1$
Strain in steel, ϵ_t	0.0051	in/in	$\epsilon_t = \epsilon_u(d-c)/c$, $\epsilon_u = 0.003$

SECTION 3: DESIGN BENDING MOMENT (MAIN REINFORCEMENT)

Nominal moment strength, M_n	18971	lb-ft	$M_n = A_s f_y(d-a/2) / (12\ in/ft)$
Strength reduction factor for bending, φ	0.90		(ACI 318, Section 9.3.2, value depends on ϵ_t)
Design bending strength, φM_n	17074	lb-ft	
Adjusted design bending strength, $\varphi M_{n,\ adjusted}$	17074	lb-ft	$\varphi M_{n,\ adjusted} = \varphi M_n(l_{d,\ max} / l_d) \leq \varphi M_n$
Bending Unity Check	0.66		Unity = $M_u/\varphi M_n$) OK
Minimum Required Steel Area, $A_{s,\ min}$	0.213	in^2	$A_{s,\ min} = (1/f_y)3bd\sqrt{f_c'}$
Maximum Allowed Steel Area, $A_{s,\ max}$	1.39	in^2	$A_{s,\ max} = 0.85bd\beta_1(f_c'/f_y)[0.003/(0.003+0.004)]$

Minimum and maximum steel requirements are satisfied

(ACI 318, Sections 10.5.1 and 10.3.5)

SECTION 4: DEVELOPMENT OF DEFORMED BARS (ACI 318 Sections 12.2 and 12.11.3)

Is rebar ends straight or in hook?	Straight		
Minimum required rebar development length, l_{dh}	9.5	in	$l_{dh} = (0.02\Psi_e f_y/\sqrt{f'_c})d_b$, $\Psi_e = 1.0$
Minimum required rebar development length, l_d	11.4	in	$l_d = (3/40)(f_y/\sqrt{f_c'})(\Psi_t\Psi_e\Psi_s/[(c_b+K_{tr})/d_b])d_b$
			$K_{tr} = 1$, $\Psi_t = 1.0$, $\Psi_e = 1.0$, $\Psi_s = 0.8$ or 1
			$(c_b+K_{tr})/d_b \leq 2.5$ $\Psi_e = 1.0$
Available end anchorage, l_a	12	in	l_a = distance from face of support to end of bar
Factored Shear Load at face of support, $V_{u,i}$	4795	lb/ft	ACI 318, Section 12.11.3
Available length for development, $l_{d,\,max}$	17.14	in	ACI 318, Eq. 12-5: $l_{dh} \leq 1.3M_n/V_{u,i} + l_a$
Available bending strength capacity, %	100.0	%	ACI 318, Section 12.2.5

Minimum required bar development length is less than the available length: no reduction to design bending moment is required

SECTION 5: DESIGN SHEAR STRENGTH (ACI 318, Section 11.11.1.1)

Nominal shear strength, V_n	8538	lb	ACI 318 Eq. 11-2: $V_n = V_c + V_s$
Nominal shear strength provided by concrete, V_c	8538	lb	ACI 318 Eq. 11-3: $V_c = 2bd\sqrt{f_c'}$
Minimum yield srength of stirrups, f_{yt}	40000	psi	
Stirrup spacing, s_s	4.00	in	
Maximum Spacing, s_{max}	1.88	in	ACI 318, 11.4.5
Minimum steel area of stirrups, $A_{v,\,min}$	0.090	in^2	ACI 318, Eq. 11-13
Actual steel area of stirrups, A_v	0.00	in^2	No stirrups
Nominal shear strength provided by steel, V_s	0	lb	ACI 318, Eq. 11-15
Strength reduction factor for shear, φ	0.75		(ACI 318, Section 9.3.2.3)
Design shear strength, φV_n	6404	lb	
Shear Unity Check	0.94		Unity = $V_u/\varphi V_n$) OK

Design Shear Calculations for Other Locations Along the Beam Length

		at 1ft	at 2 ft	at 3 ft	at 4 ft	at 5 ft
	V_u	4795	3596	2398	1199	0
	s_s	4	4	4	4	24
[d/2]	s_{max}	1.9	1.9			
$[A_vF_y / (0.75b\sqrt{f'_c})]$	s_{max}	0.0	0.0			
$[A_vF_y / (0.50b)]$	s_{max}	0.0	0.0			
[24]	s_{max}	24.0	24.0	24.0	24.0	24.0
	A_v	0.00	0.00	0.00	0.00	0.00
	V_c	8538	8538	8538	8538	8538
	$0.5\varphi V_c$	3202	3202	3202	3202	3202
	$4bd\sqrt{f'_c}$	17076	17076	17076	17076	17076
	$8bd\sqrt{f'_c}$	34153	34153	34153	34153	34153
$[V_s=A_vF_yd/s < 8bd\sqrt{f'_c}]$	V_s	0	0	0	0	0
	V_n	8538	8538	8538	8538	8538
	φV_n	6404	6404	6404	6404	6404
	Unity	0.75	0.56	0.37	0.19	0.00

SECTION 6: SERVICEABILITY REQUIREMENTS

Length of Beam, L	10	ft	
Allowable Live Load Deflection, $\Delta_{all,\ L}$	0.33	in	(Design criterion: L/360)
Allowable Total Load Deflection, $\Delta_{all,\ T}$	0.5	in	(Design criterion: L/240)
Live Load Deflection Unity Check	0.18		Unity = Δ_L / $\Delta_{all,\ L}$ OK
Total Load Deflection Unity Check	0.24		Unity = Δ_T / $\Delta_{all,\ T}$ OK

SECTION 7: DETAILS OF REINFORCEMENT

Minimum clear spacing between bars, $s_{clear,\ min}$	1.0	in	s_{min} = the greater of d_b or 1.0"
Actual clear spacing between bars, s_{clear}	1.00	in	
Maximum spacing between bars, s_{max}	18	in	ACI 318, Section 7.6.5

Minimum and maximum steel requirements are satisfied

Minimum Concrete Cover, $t_{c,min}$	0.625	in	ACI 318, Section 7.7.3(b), d_b<11/8"

Minimum concrete cover requirement is satisfied

WoodWorks® Sizer **SOFTWARE FOR WOOD DESIGN**

Bond Beam Moments **WoodWorks® Sizer 11.1** **June 4, 2019 13:42:37**
Critical Results

ANALYSIS DIAGRAMS (unknown section - no self-weight)

REACTION [lbs]
Maximum...
Uplift: -972
Bearing: 11664

Factored Line Load = 972plf

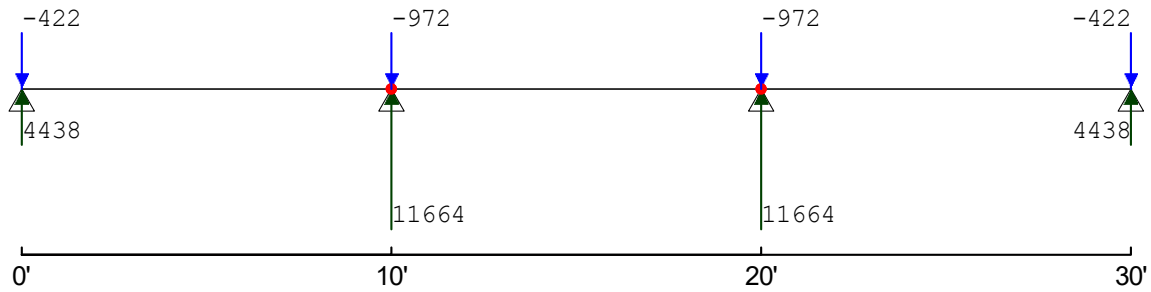

SHEAR [lbs]
Load Combination #5: D+L (pattern: LL_)
+V max: 5670
-V max: -5994

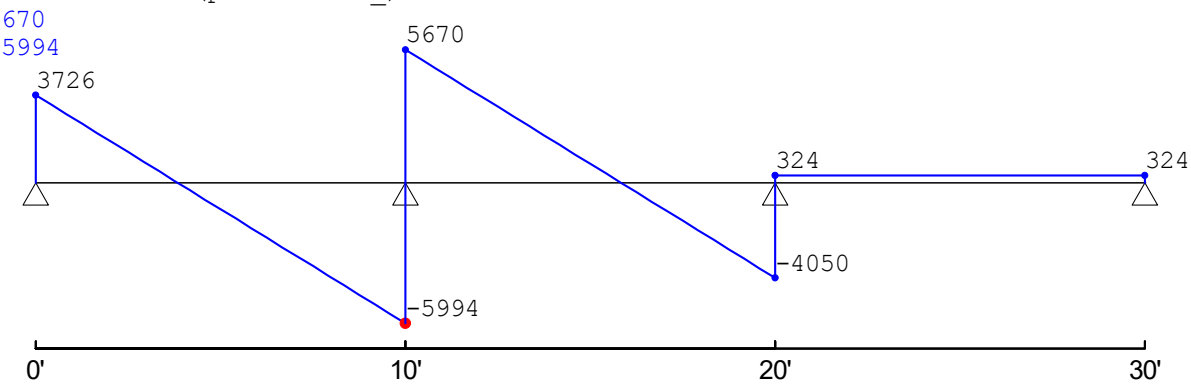

BENDING [lbs-ft]
Load Combination #7: D+L (pattern: L_L)
+M max: 9842
LC #5: D+L (pattern: LL_) 9842
-M max: -11340

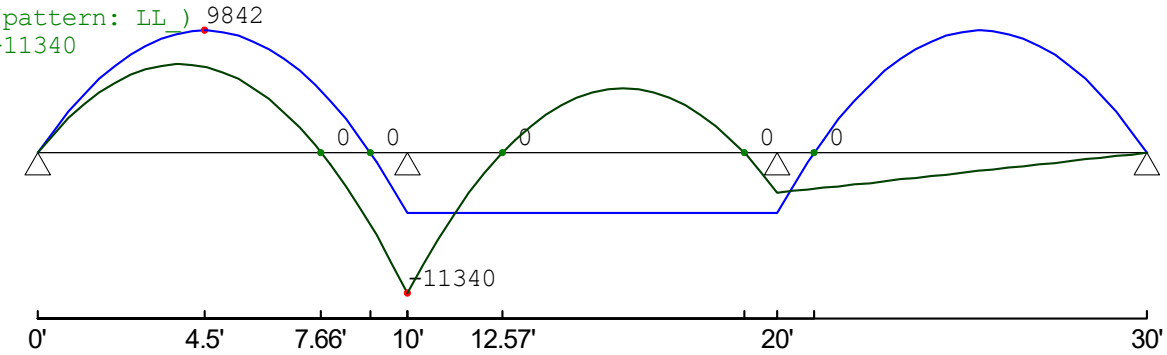

TOTAL DEFLECTION [in]
Load Combination #7:
Total = 1.00 x Dead + Live (all others)

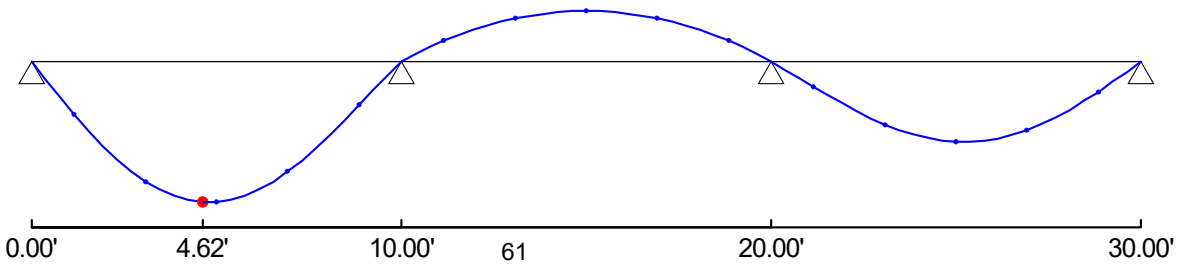

Gestation Pit, 9' Centerwall
(Equalizer openings balance manure load on wall)

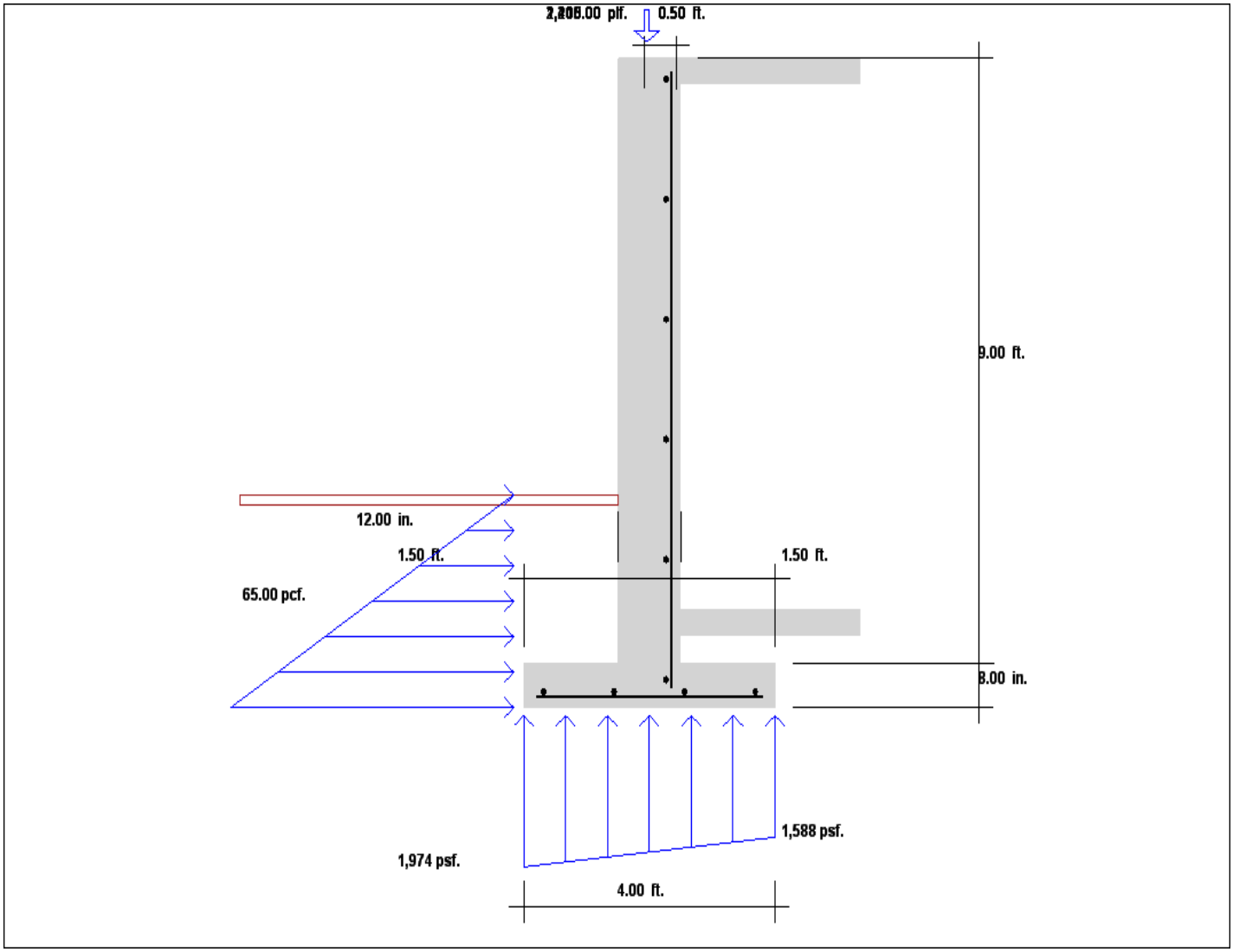

QuickWall 9.0 - RETAINING WALL ANALYSIS AND DESIGN

Job ID : Bivouac Farm
Job Description : 9' Center Wall Designed By :

FOOTING DESIGN METHOD: Ultimate Strength ACI 318-14
STEM DESIGN METHOD : Ultimate Strength ACI 318-14 (Concrete)
WALL TYPE : Basement Wall, restricted against sliding

RETAINING WALL DIMENSIONS:

Wall Stem Height		=	9.00 ft.		
Stem Thickness @ Top		=	12.00 in.		
Stem Thickness @ Bottom		=	12.00 in.		
Footing Thickness		=	8.00 in.		
Heel Width	Min.	=	1.50 ft.	Design Heel Width	= 1.50 ft.
	Max.	=	20.00 ft.		
Toe Width	Min.	=	1.50 ft.	Design Toe Width	= 1.50 ft.
	Max.	=	10.00 ft.		
Footing Key Depth		=	0.00 ft.	Design Key Depth	= 0.00 ft.
Footing Key Width		=	0.00 ft.	Design Key Width	= 0.00 ft.
BackFill Slope (Vert/Horiz)		=	0.00 :12		

RETAINING WALL LOADS:

Horizontal Equivalent Fluid Pressure	=	65.00 pcf.	(Load Case = Live)
Backfill Height	=	2.50 ft.	
Equivalent Fluid Pressure Angle	=	N/A deg.	
Vertical Surcharge on Backfill	=	0 psf.	(Load Case = Soil)
Horizontal Surcharge	=	0 psf.	(Load Case = Soil)
Vertical Surcharge on Toe	=	0 psf.	(Load Case = Soil)
Wind Load on Fence	=	0 psf.	(Load Case = Wind)
Fence Height	=	0.00 ft.	

Line No.	Ld. Type (H or V)	Magnitude (plf)	Dist. (x) (ft.)	Load Case
1	V	2,415.00	0.50	Roof
2	V	1,200.00	0.50	Live
3	V	1,405.00	0.50	Dead
4				
5				
6				
7				
8				
9				
10				

Notes: 1. "H" = Horizontal loads. "V" = Vertical loads.
2. Vertical loads are positive down.

ULTIMATE STRENGTH LOAD COMBINATIONS (Concrete Design):

1.4D + 1.4H
1.2D + 1.6L + 1.6H + 0.5R
1.2D + 1.6R + 1.6H + 1.0L
1.2D + 1.6R + 1.6H + 0.5W
1.2D + 1.0W + 1.0L + 0.5R
1.2D + 1.0E + 1.0L + 1.6H + 0.2R
0.9D + 1.0W + 1.6H
0.9D + 1.0E + 1.6H

WORKING STRESS LOAD COMBINATIONS (Stability Checks and Masonry Design):

D + L + R + H
D + L + 0.6W + H
D + L + 0.6W + 0.5R + H
D + L + R + 0.3W + H
D + L + R + E/1.4 + H
D + E/1.4 + H

```
RETAINING WALL RESISTING FORCES:
------------------------------------
Allowable Soil Pressure         =  3,000 psf.
Passive Equivalent Fluid Press. =    N/A
Passive Soil Height             =    N/A
Coefficient of Friction         =    N/A
Cohesion                        =    N/A

Use Vertical Surcharge as Resisting Wt.? =    N/A

Overturning Safety Factor       =    N/A
Sliding Safety Factor           =    N/A
Limit Reaction to Mid 1/3?      =    N/A


MATERIAL DATA:
------------------------------------
Concrete Strength, f'c      =   4.00 ksi.
Steel Yield Strength, Fy    =  60.00 ksi.

Concrete Unit Weight        = 145.00 pcf.
Soil Unit Weight            = 110.00 pcf.
Fence Weight                =  10.00 psf.


REINFORCING STEEL DATA:
------------------------------------
Concrete cover to center of steel:
          Wall Outside Face =   6.00 in.
 Footing Heel (Bottom Face) =   3.50 in.
  Footing Toe (Bottom Face) =   3.50 in.

Minimum Ratios for Shrinkage and Temperature Reinf:
       Vertical Stem Reinf. = 0.0012
     Horizontal Stem Reinf. = 0.0020
      Footing Reinforcement = 0.0012
```

```
*************************************************
        S U M M A R Y   O F   R E S U L T S
*************************************************
```

DIMENSIONS:

Stem Height	= 9.00 ft.	Heel Length	= 1.50 ft.
Stem Thick. @ Top	= 12.00 in.	Toe Length	= 1.50 ft.
Stem Thick. @ Base	= 12.00 in.	Total Ftg. Width, B	= 4.00 ft.
Footing Thickness	= 8.00 in.	Key Depth	= 0.00 ft.
		Key Width	= 0.00 ft.

ANALYSIS RESULTS:

Max Brg Press. @ Toe	= 1,588 psf.	Sliding Force	= 0 Lb
@ Heel	= 1,974 psf.	Resisting Force	= N/A
Allowable Brg. Press.	= 3,000 psf.	F.O.S.	= N/A
Resultant Loc From C.L.	= -0.07 ft.	Overturn. Moment	= 0 ft-lb
Kern Point Loc., B/6	= 0.67 ft.	Resisting Moment	= 14,764 ft-lb
Limit Resultant To Mid 1/3?	= N/A	F.O.S.	= N/A

DESIGN RESULTS: Design Method, Stem: USD, ACI 318-14 (Concrete)
Ftg.: Ultimate Strength ACI 318-14

	d (in.)	Mu (ft-k)	Vu (kip)	Phi Vn (kip)	As Flex. (in^2)	As Min. (in^2)	As T+S (in^2)
Stem :	6.00	-0.02	0.30	6.83	0.001	0.001	0.173
Toe :	4.50	2.28	2.29	5.12	0.115	0.153	0.115
Heel :	4.50	-2.30	-3.03	5.12	0.116	0.155	0.115
Key :	0.00	0.00	0.00	0.00	0.000	0.000	0.000

Notes: 1. Stem moments are positive if they cause tension on the soil face. Negative if they cause tension on the outside face. Stem shear is positive to the left as measured on a section cut below the top of wall.

2. Heel moments are positive if they cause tension in the top of the footing. Heel shear is positive up as measured on a section cut to the right of the end of the heel.

3. Toe moments are positive if they cause tension in the bottom of the footing. Toe shear is positive up as measured on a section cut to the left of the end of the toe.

```
*************************************************
 S T A B I L I T Y   A N A L Y S I S   R E P O R T
*************************************************

-------------------------------------------------------------------------------
Stability Analysis: Governing Combination = D + L + R + H

----------RESISTING FORCES---------     ---------OVERTURNING FORCES---------
Element    Weight  x  Arm  = Moment     Element      Force  x  Arm  = Moment
Soil          413             1,341     R at Top       -14    9.67      -136
Ftg.          387    2.00       773     R at Bot.     -312    0.67      -208
Stem        1,305    2.00     2,610     Horiz. EFP     326    1.06       344
Vert Sur                               Vert Sur
Vert EFP                               Horiz Sur
Toe Sur.                               Wind
Fence Wt.                              Horiz line
V. line     5,020            10,040    Vert. line
          --------         --------                --------         --------
Sum WT =    7,124    MR =    14,764    Sum F =          0   MOT =         0

-------------------------------------------------------------------------------

Friction Force        =    N/A        F.O.S. Sliding    =   RF / F =    N/A
Passive Pressure      =    N/A        F.O.S. Overturn.  = MR / MOT =    N/A
Cohesion              =    N/A
                         --------          Coef. Vert. Surcharge or Line Load
Resist. Force, Sum RF =      N/A           to Horiz. = EFP / Soil Dens. =  0.591

-------------------------------------------------------------------------------

Resultant Loc From Toe,      X = (MR - MOT) / Sum WT     =    2.07 ft.
Eccentricity From Ftg. C.L., e = (B / 2) - X             =   -0.07 ft.

Soil Pressure @ Toe            = (WT / B) * (1 + 6e/B)   =   1,588 psf.
Soil Pressure @ Heel           = (WT / B) * (1 - 6e/B)   =   1,974 psf.
```

```
*************************************************
   D E T A I L E D   D E S I G N   R E P O R T
*************************************************
```

STEM DESIGN: Steel Design Comb = 1.2D + 1.6L + 1.6H + 0.5R
Shr Strength @ Base, Phi Vn = 6.83 kip

Dist From Top (ft)	d (in.)	Mu (ft-k)	Vu (kip)	As Flex. (in^2)	As Min. (in^2)	As T+S (in^2)	As Reqd (in^2)	Comb
0.90	6.00	-0.02	-0.02	0.001	0.001	0.173	0.173	2
1.80	6.00	-0.04	-0.02	0.002	0.002	0.173	0.173	2
2.70	6.00	-0.06	-0.02	0.002	0.003	0.173	0.173	2
3.60	6.00	-0.08	-0.02	0.003	0.004	0.173	0.173	2
4.50	6.00	-0.10	-0.02	0.004	0.005	0.173	0.173	2
5.40	6.00	-0.12	-0.02	0.005	0.006	0.173	0.173	2
6.30	6.00	-0.14	-0.02	0.005	0.007	0.173	0.173	2
7.20	6.00	-0.16	0.00	0.006	0.008	0.173	0.173	2
8.10	6.00	-0.11	0.11	0.004	0.006	0.173	0.173	2
9.00	6.00	0.07	0.30	0.003	0.003	0.173	0.173	2

Vertical Stem Reinforcement:
Available Length for Hook Embedment into Footing = 5.00 in.
Available Length for Straight Embedment into Stem = 106.00 in.

	Development Length Straight (in.)	Hook (in.)	Percent Develop.	Spac. (in.)	50% Cut Off (in.)
#4				13.89	
#5				18.00	
#6				18.00	
#7				18.00	
#8				18.00	
#9				18.00	
#10				18.00	
#11				18.00	

Horizontal Stem Reinforcement:
Area of steel for Shrinkage and Temp. Reinforcement = 0.288 in^2

	-----Spacing, in.-----		------Total Bars------	
	I.F. Only	EA. Face	I.F. Only	EA. Face
#4	8.33	16.67	14.00	8.00
#5	12.92	18.00	10.00	7.00
#6	18.00	18.00	7.00	7.00
#7	18.00	18.00	7.00	7.00
#8	18.00	18.00	7.00	7.00
#9	18.00	18.00	7.00	7.00
#10	18.00	18.00	7.00	7.00
#11	18.00	18.00	7.00	7.00

TOE DESIGN:

* Steel Design Comb. = 1.2D + 1.6R + 1.6H + 1.0L
* Thickness Design Comb. = 1.2D + 1.6R + 1.6H + 1.0L
* Available Length for Hook Embedment into Stem = 6.50 in.
* Available Length for Straight Embed. into Toe = 16.00 in.

d (in.)	Mu (ft-k)	Vu (kip)	Phi Vn (kip)	As Flex. (in^2)	As Min. (in^2)	As T+S (in^2)	As Req'd (in^2)
4.50	2.28	2.29	5.12	0.115	0.153	0.115	0.153

	Development Length Straight (in.)	Hook (in.)	Percent Develop.	Spac. (in.)
#4				15.67
#5				18.00
#6				18.00
#7				18.00
#8				18.00
#9				18.00
#10				18.00
#11				18.00

HEEL DESIGN:

* Steel Design Comb. = 1.2D + 1.6R + 1.6H + 1.0L
* Thickness Design Comb. = 1.2D + 1.6R + 1.6H + 1.0L
* Available Length for Straight Embedment into Toe = 28.00 in.
* Available Length for Straight Embedment into Heel = 16.00 in.

d (in.)	Mu (ft-k)	Vu (kip)	Phi Vn (kip)	As Flex. (in^2)	As Min. (in^2)	As T+S (in^2)	As Req'd (in^2)
4.50	-2.30	-3.03	5.12	0.116	0.155	0.115	0.155

	Development Length Straight (in.)	Hook (in.)	Percent Develop.	Spac. (in.)
#4				15.53
#5				18.00
#6				18.00
#7				18.00
#8				18.00
#9				18.00
#10				18.00
#11				18.00

LONGITUDINAL FOOTING REINFORCEMENT (TEMP & SHRINK ONLY):

	Spacing (in.)
#4	20.83
#5	32.29
#6	45.83
#7	62.50
#8	82.29
#9	104.17
#10	132.29
#11	162.50

Gestation, 9' Pumpout Wall

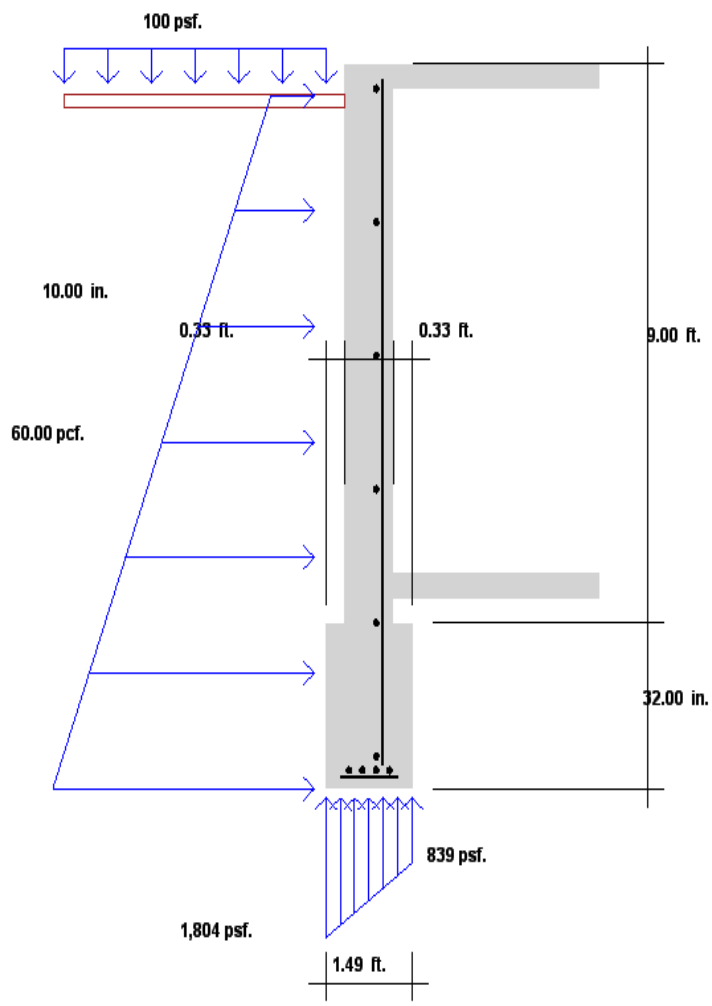

```
                 QuickWall 9.0 - RETAINING WALL ANALYSIS AND DESIGN
================================================================================
Job ID  : Bivouac Farm
Job Description : 9' Pumpout Wall                                   Designed By :
================================================================================

FOOTING DESIGN METHOD:  Ultimate Strength ACI 318-14
STEM DESIGN METHOD   :  Ultimate Strength ACI 318-14 (Concrete)
WALL TYPE            :  Basement Wall, restricted against sliding

RETAINING WALL DIMENSIONS:
-------------------------------------
Wall Stem Height            =   9.00 ft.
Stem Thickness @ Top        =  10.00 in.
Stem Thickness @ Bottom     =  10.00 in.

Footing Thickness           =  32.00 in.
Heel Width . . . . . . Min. =   0.33 ft.     Design Heel Width =   0.33 ft.
                      Max. =  10.00 ft.
Toe Width  . . . . . . Min. =   0.33 ft.     Design Toe Width  =   0.33 ft.
                      Max. =  10.00 ft.
Footing Key Depth           =   0.00 ft.     Design Key Depth  =   0.00 ft.
Footing Key Width           =   0.00 ft.     Design Key Width  =   0.00 ft.
BackFill Slope (Vert/Horiz) =   0.00 :12

RETAINING WALL LOADS:
-------------------------------------
Horizontal Equivalent Fluid Pressure     =  60.00 pcf.  (Load Case = Soil)
Backfill Height                          =   8.50 ft.
Equivalent Fluid Pressure Angle          =    N/A deg.
Vertical Surcharge on Backfill           =    100 psf.  (Load Case = Soil)
Horizontal Surcharge                     =      0 psf.  (Load Case = Wind)
Vertical Surcharge on Toe                =      0 psf.  (Load Case = Soil)
Wind Load on Fence                       =      0 psf.  (Load Case = Wind)
Fence Height                             =   0.00 ft.

Line Ld.   Type      Magnitude    Dist. (x)    Load Case
  No.    (H or V)      (plf)        (ft.)
  1
  2
  3
  4
  5
  6
  7
  8
  9
  10

Notes:  1. "H" = Horizontal loads.  "V" = Vertical loads.
        2.  Vertical loads are positive down.
```

```
ULTIMATE STRENGTH LOAD COMBINATIONS (Concrete Design):
-------------------------------------

1.4D + 1.4H
1.2D + 1.6L + 1.6H + 0.5R
1.2D + 1.6R + 1.6H + 1.0L
1.2D + 1.6R + 1.6H + 0.5W
1.2D + 1.0W + 1.0L + 0.5R
1.2D + 1.0E + 1.0L + 1.6H + 0.2R
0.9D + 1.0W + 1.6H
0.9D + 1.0E + 1.6H

WORKING STRESS LOAD COMBINATIONS (Stability Checks and Masonry Design):
-------------------------------------

D + L + R + H
D + L + 0.6W + H
D + L + 0.6W + 0.5R + H
D + L + R + 0.3W + H
D + L + R + E/1.4 + H
D + E/1.4 + H
```

```
RETAINING WALL RESISTING FORCES:
------------------------------------
Allowable Soil Pressure         =  3,000 psf.
Passive Equivalent Fluid Press. =    N/A
Passive Soil Height             =    N/A
Coefficient of Friction         =    N/A
Cohesion                        =    N/A

Use Vertical Surcharge as Resisting Wt.? =    N/A

Overturning Safety Factor       =    N/A
Sliding Safety Factor           =    N/A
Limit Reaction to Mid 1/3?      =    N/A


MATERIAL DATA:
------------------------------------
Concrete Strength, f'c      =   4.00 ksi.
Steel Yield Strength, Fy    =  60.00 ksi.

Concrete Unit Weight        = 145.00 pcf.
Soil Unit Weight            = 110.00 pcf.
Fence Weight                =  10.00 psf.


REINFORCING STEEL DATA:
------------------------------------
Concrete cover to center of steel:
          Wall Outside Face =   5.00 in.
 Footing Heel (Bottom Face) =  28.50 in.
  Footing Toe (Bottom Face) =  28.50 in.

Minimum Ratios for Shrinkage and Temperature Reinf:
       Vertical Stem Reinf. = 0.0012
     Horizontal Stem Reinf. = 0.0020
      Footing Reinforcement = 0.0012
```

```
*************************************************
       S U M M A R Y   O F   R E S U L T S
*************************************************
```

DIMENSIONS:

Stem Height	= 9.00 ft.	Heel Length	= 0.33 ft.
Stem Thick. @ Top	= 10.00 in.	Toe Length	= 0.33 ft.
Stem Thick. @ Base	= 10.00 in.	Total Ftg. Width, B	= 1.49 ft.
Footing Thickness	= 32.00 in.	Key Depth	= 0.00 ft.
		Key Width	= 0.00 ft.

ANALYSIS RESULTS:

Max Brg Press. @ Toe	= 839 psf.	Sliding Force	= 0 Lb
@ Heel	= 1,804 psf.	Resisting Force	= N/A
Allowable Brg. Press.	= 3,000 psf.	F.O.S.	= N/A
Resultant Loc From C.L.	= -0.09 ft.	Overturn. Moment	= 0 ft-lb
Kern Point Loc., B/6	= 0.25 ft.	Resisting Moment	= 1,653 ft-lb
Limit Resultant To Mid 1/3?	= N/A	F.O.S.	= N/A

DESIGN RESULTS: Design Method, Stem: USD, ACI 318-14 (Concrete)
Ftg.: Ultimate Strength ACI 318-14

	d (in.)	Mu (ft-k)	Vu (kip)	Phi Vn (kip)	As Flex. (in^2)	As Min. (in^2)	As T+S (in^2)
Stem :	5.00	3.82	3.19	5.69	0.174	0.200	0.240
Toe :	3.50	0.04	0.02	3.98	0.003	0.003	0.461
Heel :	3.50	-0.03	-0.17	3.98	0.002	0.003	0.461
Key :	0.00	0.00	0.00	0.00	0.000	0.000	0.000

Notes: 1. Stem moments are positive if they cause tension on the soil face. Negative if they cause tension on the outside face. Stem shear is positive to the left as measured on a section cut below the top of wall.

2. Heel moments are positive if they cause tension in the top of the footing. Heel shear is positive up as measured on a section cut to the right of the end of the heel.

3. Toe moments are positive if they cause tension in the bottom of the footing. Toe shear is positive up as measured on a section cut to the left of the end of the toe.

```
*************************************************
 S T A B I L I T Y   A N A L Y S I S   R E P O R T
*************************************************

-------------------------------------------------------------------------------
Stability Analysis: Governing Combination = D + L + R + H

----------RESISTING FORCES---------     ---------OVERTURNING FORCES---------
Element    Weight  x  Arm  = Moment     Element      Force  x  Arm  = Moment
Soil          309               410     R at Top      -636   11.67    -7,422
Ftg.          577    0.75       431     R at Bot.   -3,714    2.67    -9,903
Stem        1,088    0.75       812     Horiz. EFP   3,741    3.72    13,924
Vert Sur                               Vert Sur       609    5.58     3,401
Vert EFP                               Horiz Sur
Toe Sur.                               Wind
Fence Wt.                              Horiz line
V. line                                Vert. line
          --------          --------                --------          --------
Sum WT =    1,973    MR =     1,653     Sum F =          0   MOT =         0

-------------------------------------------------------------------------------

Friction Force        =    N/A        F.O.S. Sliding    =   RF / F =    N/A
Passive Pressure      =    N/A        F.O.S. Overturn.  = MR / MOT =    N/A
Cohesion              =    N/A
                         --------          Coef. Vert. Surcharge or Line Load
Resist. Force, Sum RF =      N/A           to Horiz. = EFP / Soil Dens. =  0.545

-------------------------------------------------------------------------------

Resultant Loc From Toe,      X = (MR - MOT) / Sum WT     =    0.84 ft.
Eccentricity From Ftg. C.L., e = (B / 2) - X             =   -0.09 ft.

Soil Pressure @ Toe            = (WT / B) * (1 + 6e/B)   =     839 psf.
Soil Pressure @ Heel           = (WT / B) * (1 - 6e/B)   =   1,804 psf.
```

```
**************************************************
   D E T A I L E D   D E S I G N   R E P O R T
**************************************************
```

STEM DESIGN: Steel Design Comb = 1.2D + 1.6L + 1.6H + 0.5R
Shr Strength @ Base, Phi Vn = 5.69 kip

Dist From Top (ft)	d (in.)	Mu (ft-k)	Vu (kip)	As Flex. (in^2)	As Min. (in^2)	As T+S (in^2)	As Reqd (in^2)	Comb
0.90	5.00	-0.91	-0.98	0.041	0.054	0.144	0.144	2
1.80	5.00	-1.72	-0.82	0.077	0.103	0.144	0.144	2
2.70	5.00	-2.37	-0.59	0.107	0.142	0.144	0.144	2
3.60	5.00	-2.77	-0.29	0.125	0.167	0.144	0.167	2
4.50	5.00	-2.86	0.10	0.129	0.173	0.144	0.173	2
5.40	5.00	-2.57	0.56	0.116	0.155	0.144	0.155	2
6.30	5.00	-1.82	1.10	0.082	0.109	0.144	0.144	2
7.20	5.00	-0.56	1.72	0.025	0.033	0.144	0.144	2
8.10	5.00	1.30	2.42	0.058	0.078	0.144	0.144	2
9.00	5.00	3.82	3.19	0.174	0.200	0.240	0.240	2

Vertical Stem Reinforcement:
Shear-Friction Steel Added at Stem Base (ACI 14 22.9), Avf = 0.096 in^2
Available Length for Hook Embedment into Footing = 4.00 in.
Available Length for Straight Embedment into Stem = 106.00 in.

	Development Length Straight (in.)	Hook (in.)	Percent Develop.	Spac. (in.)	50% Cut Off (in.)
#4				9.98	
#5				15.47	
#6				18.00	
#7				18.00	
#8				18.00	
#9				18.00	
#10				18.00	
#11				18.00	

Horizontal Stem Reinforcement:
Area of steel for Shrinkage and Temp. Reinforcement = 0.240 in^2

	-----Spacing, in.-----		------Total Bars------	
	I.F. Only	EA. Face	I.F. Only	EA. Face
#4	10.00	18.00	12.00	7.00
#5	15.50	18.00	8.00	7.00
#6	18.00	18.00	7.00	7.00
#7	18.00	18.00	7.00	7.00
#8	18.00	18.00	7.00	7.00
#9	18.00	18.00	7.00	7.00
#10	18.00	18.00	7.00	7.00
#11	18.00	18.00	7.00	7.00

TOE DESIGN:

* Steel Design Comb. = 1.4D + 1.4H
* Thickness Design Comb. = 1.4D + 1.4H
* Available Length for Hook Embedment into Stem = 5.50 in.
* Available Length for Straight Embed. into Toe = 1.96 in.

d (in.)	Mu (ft-k)	Vu (kip)	Phi Vn (kip)	As Flex. (in^2)	As Min. (in^2)	As T+S (in^2)	As Req'd (in^2)
3.50	0.04	0.02	3.98	0.003	0.003	0.461	0.461

	Development Length Straight (in.)	Hook (in.)	Percent Develop.	Spac. (in.)
#4				5.21
#5				8.07
#6				11.46
#7				15.63
#8				18.00
#9				18.00
#10				18.00
#11				18.00

HEEL DESIGN:

* Steel Design Comb. = 1.4D + 1.4H
* Thickness Design Comb. = 1.4D + 1.4H
* Available Length for Straight Embedment into Toe = 11.96 in.
* Available Length for Straight Embedment into Heel = 1.96 in.

d (in.)	Mu (ft-k)	Vu (kip)	Phi Vn (kip)	As Flex. (in^2)	As Min. (in^2)	As T+S (in^2)	As Req'd (in^2)
3.50	-0.03	-0.17	3.98	0.002	0.003	0.461	0.461

	Development Length Straight (in.)	Hook (in.)	Percent Develop.	Spac. (in.)
#4				5.21
#5				8.07
#6				11.46
#7				15.63
#8				18.00
#9				18.00
#10				18.00
#11				18.00

LONGITUDINAL FOOTING REINFORCEMENT (TEMP & SHRINK ONLY):

	Spacing (in.)
#4	5.21
#5	8.07
#6	11.46
#7	15.63
#8	20.57
#9	26.04
#10	33.07
#11	40.63

Concrete Footing Design

Job: Bivouac Farm
Description: Pillar Footing
Time: 11:53 AM 6/4/2019

Designed By:
Checked By:
Program: Spread Footing Design v3.2 Code: ACI 2008

SOIL DATA				CONCRETE DATA				COLUMN DATA			
Max. Vert Press.	=	2.000	K /Ft ^2	F'c	=	4.000	K /In ^2	F'c	=	4.000	K /In ^2
Max. Flexural Press.	=	2.500	K /Ft ^2	Density	=	150.000	Lb/Ft ^3	X Dim.	=	12.000	In
Density	=	100.000	Lb/Ft ^3	Fy	=	60.000	K /In ^2	Z Dim.	=	12.000	In
Phi Angle	=	30.000	Deg					X Offset	=	0.000	Ft
Coeff. of Friction	=	0.330						Z Offset	=	0.000	Ft
Cohesion	=	0.000	Lb/Ft ^2	**SURCHARGE DATA**							
Ftg. Depth	=	3.500	Ft	+X,+Z Quadrant	=	0.000	K /Ft ^2				
FS Uplift	=	1.500		+X,-Z Quadrant	=	0.000	K /Ft ^2	**BASE PLATE DATA**			
FS Overturning	=	1.500		-X,-Z Quadrant	=	0.000	K /Ft ^2	X Dim.	=	0.000	In
FS Sliding	=	1.500		-X,+Z Quadrant	=	0.000	K /Ft ^2	Z Dim.	=	0.000	In

C O L U M N L O A D D E S C R I P T I O N S

COLUMN LOAD	DESCRIPTION
1	

L O A D C O M B I N A T I O N S

LOAD COMBINATION	DESCRIPTION
1	1.4D
2	1.2D + 1.6L + 0.5R
3	1.2D + L + 1.6R
4	1.2D + 0.8W + 1.6R
5	1.2D + L + 1.6W + 0.5R
6	1.2D + L + 1.4E + 0.2R
7	0.9D + 1.6W
8	0.9D + 1.4E
9	1.2D - 0.8W + 1.6R
10	1.2D + L - 1.6W + 0.5R
11	1.2D + L - 1.4E + 0.2R
12	0.9D - 1.6W
13	0.9D - 1.4E

U N F A C T O R E D L O A D S I N P U T

COLUMN LOAD No. 1	DEAD LOAD	LIVE LOAD	WIND LOAD	EARTHQUAKE LOAD	ROOF LOAD
Vertical =	-6.000 K	-12.000 K	0.000 K	0.000 K	0.000 K
Moment X =	0.000 Ft-K	0.000 Ft-K	0.000 Ft-K	0.000 Ft-K	0.000 Ft-K
Moment Z =	0.000 Ft-K	0.000 Ft-K	0.000 Ft-K	0.000 Ft-K	0.000 Ft-K
Horizontal X =	0.000 K				
Z =	0.000 K				

F O O T I N G O U T P U T

FOOTING DESIGN

X Dimension =	3.250	Ft	
Z Dimension =	3.250	Ft	
Thickness =	8.000	In	
Max. Press. =	1.737	K /Ft ^2	

SHEAR STRESSES (ONE WAY)

+X Area =	0.035	K /In ^2
-X Area =	0.035	K /In ^2
+Z Area =	0.050	K /In ^2
-Z Area =	0.050	K /In ^2
Allow. =	0.095	K /In ^2

SHEAR STRESSES (TWO WAY)

+X Area =	0.086	K /In ^2
-X Area =	0.086	K /In ^2
+Z Area =	0.086	K /In ^2
-Z Area =	0.086	K /In ^2
Allow. =	0.190	K /In ^2

X Dimension Governing Column = 1, Combination = 2
Z Dimension Governing Column = 1, Combination = 2
Thickness = User Defined Minimum
Max. Pressure Governing Column = 1, Combination = 2
Design Controlled by Soil Pressures

BOTTOM STEEL DESIGN (Parallel to X Axis)
Governing Column = Temp/Shrink Minimum
Moment (+X Area) = 5.140 Ft-K

BOTTOM STEEL DESIGN (Parallel to Z Axis)
Governing Column = Temp/Shrink Minimum
Moment (+Z Area) = 5.140 Ft-K

```
        (-X Area)  =        5.140  Ft-K
   Steel Required    =        0.562  In^2  (Min)
   Dist. to Centroid =        3.500  In

   Typical Spacings
       6       #3 Bars at    6.600  In. Centers
       3       #4 Bars at   16.500  In. Centers
```

```
        (-Z Area)  =        5.140  Ft-K
   Steel Required    =        0.562  In^2   (Min)
   Dist. to Centroid =        4.500  In

   Typical Spacings
       6       #3 Bars at    6.600  In. Centers
       3       #4 Bars at   16.500  In. Centers
```

QUANTITIES : 10.511 Lbs of Steel and 7.042 Ft^3 of Concrete.

ASCE 7 LOAD CALCULATIONS

PROJECT: ME011B-19 Farrowing Barn

Length parallel to Ridge, ft	B	510
Length Normal to Ridge, ft	L	120
Wall Height, ft	z	7.67

VELOCITY PRESSURE, q_h

Design Method:	Envelope Procedure		Nominal height of Atmospheric Boundary	Z_g	900
Code Standard:	ASCE 7-10		3-s Gust Speed Power Law Exponent	α	9.5
Ultimate Wind Speed, mph	V	105	Velocity Pressure Exp. Coefficient	K_z	0.85
Building Midheight, ft	h	15.17	Wind Directionality Factor	K_d	0.85
Risk Category		I	Topographic Factor	K_{zt}	1
Exposure Category		C			
Velocity Pressure, psf	q_h	**20.4**			

MWFRS - LOW RISE BUILDINGS - ENVELOPE PROCEDURE - LOAD CASE A - (PERPENDICULAR TO RIDGE)

Velocity Pressure, q_h	**20.4**	(see Velocity Pressure Calculations)	
Windward Roof Pitch (x/12)	3	14.04	(deg)
Leeward Roof Pitch (x/12)	3	14.04	(deg)
Width of Pressure Coefficiant Zone, a	4.8	ft	
Enclosure Classification	Enclosed Building		

Building Surface (ASCE 7-10 Figure 28.4-1)

	Windward		Leeward		Windward (Edge)		Leeward (Edge)	
	Wall	Roof	Roof	Wall	Wall	Roof	Roof	Wall
θ	1	2	3	4	1E	2E	3E	4E
0-5	0.4	-0.69	-0.37	-0.29	0.61	-1.07	-0.53	-0.43
20	0.53	-0.69	-0.48	-0.43	0.80	-1.07	-0.69	-0.64
30-45	0.56	0.21	-0.43	-0.37	0.69	0.27	-0.53	-0.48
90	0.56	0.56	-0.37	-0.37	0.69	0.69	-0.48	-0.48
GC_{pf}	0.48	-0.69	-0.44	-0.37	0.72	-1.07	-0.63	-0.56
GC_{pi}	**DESIGN WIND PRESSURES**							
-0.18	**13.4**	**-10.4**	**-5.2**	**-4.0**	**18.5**	**-18.2**	**-9.1**	**-7.7**
0.18	**6.1**	**-17.8**	**-12.6**	**-11.3**	**11.1**	**-25.5**	**-16.5**	**-15.0**
0	**9.8**	**-14.1**	**-8.9**	**-7.6**	**14.8**	**-21.8**	**-12.8**	**-11.4**

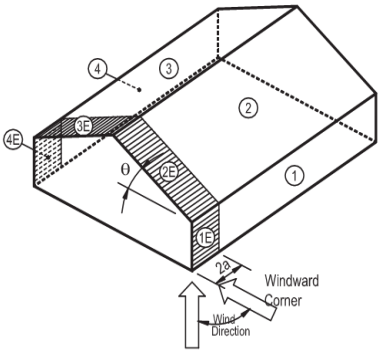

ASCE 7

MWFRS - LOW RISE BUILDINGS - ENVELOPE PROCEDURE - LOAD CASE B - (PARALLEL TO RIDGE)

Velocity Pressure, q_h	20.4	(see Velocity Pressure Calculations)
Enclosure Classification	Enclosed Building	

Building Surface (ASCE 7-10 Figure 28.4-1)

	Side 1		Side 2		Wind.	Leewrd.
	Wall	Roof	Roof	Wall	Wall	Wall
	1	2	3	4	5	6
GC_{pf}	-0.45	-0.69	-0.37	-0.45	0.40	-0.29
GC_{pi}	**DESIGN WIND PRESSURES**					
-0.18	**-5.5**	**-10.4**	**-3.9**	**-5.5**	**11.8**	**-2.2**
0.18	**-12.9**	**-17.8**	**-11.2**	**-12.9**	**4.5**	**-9.6**
0	**-9.2**	**-14.1**	**-7.6**	**-9.2**	**8.2**	**-5.9**

	1E	2E	3E	4E	5E	6E
GC_{pf}	-0.48	-1.07	-0.53	-0.48	0.61	-0.43
GC_{pi}	**DESIGN WIND PRESSURES**					
-0.18	**-6.1**	**-18.2**	**-7.1**	**-6.1**	**16.1**	**-5.1**
0.18	**-13.5**	**-25.5**	**-14.5**	**-13.5**	**8.8**	**-12.5**
0	**-9.8**	**-21.8**	**-10.8**	**-9.8**	**12.5**	**-8.8**

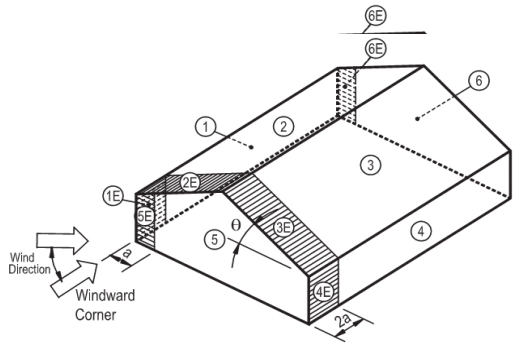

ASCE 7

C&C - LOW-RISE ENCLOSED & PART. ENCLOSED BUILDINGS - CHAPTER 30

Velocity Pressure, q_h	**20.4**	(see Velocity Pressure Calculations)	
Roof Pitch (rise per 12 units of run)	3	14.04	(deg)
Effective Roof Wind Area	8	ft^2	
Effective Wall Wind Area	16	ft^2	
Width of Pressure Coefficiant Zone, a	4.8	ft	
Enclosure Classification	Enclosed Building		

	Positive		Negative	
θ \ zone	4	5	4	5
0-10	0.873	0.873	-0.954	-1.206
>10	1.0	1.0	-1.06	-1.34
GC_p	1.0	1.0	-1.1	-1.3
GC_{pi}	**Design Wind Pressure**			
-0.18	23.5	23.5	-18.0	-23.7
0.18	16.1	16.1	-25.3	-31.0
0	19.8	19.8	-21.6	-27.4

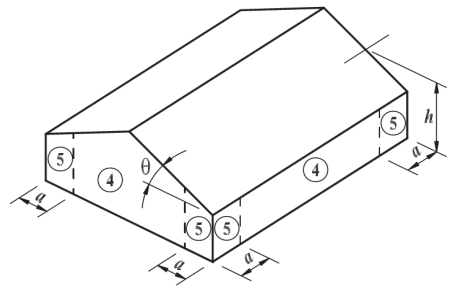

ASCE 7-10 Figure 30.4-1

	Positive	Negative		
θ \ zone	1,2&3	1	2	3
≤ 7	0.30	-1.0	-1.8	-2.8
7<θ≤27	0.50	-0.9	-1.7	-2.6
27<θ≤45	0.90	-1.00	-1.20	-1.20
GC_p	0.5	-0.9	-1.7	-2.6
GC_{pi}	**Design Wind Pressure**			
-0.18	13.9	-14.7	-31.03	-49.4
0.18	6.5	-22.0	-38.4	-56.7
0	10.2	-18.4	-34.7	-53.1

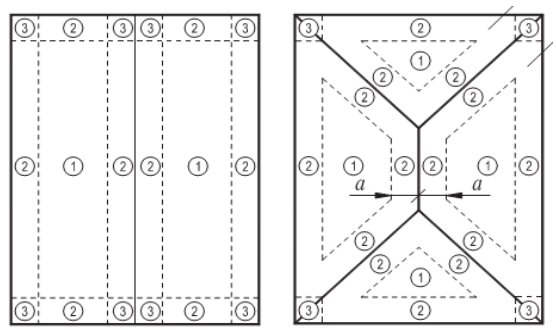

ASCE 7-10 Figure 30.4-2B

ROOF DEAD LOAD

Top Chord of Truss	5.0	psf
Bottom Chord of Truss	5.0	psf
Total Roof Dead Load	**10.0**	**psf**

MINIMUM ROOF LIVE LOAD

Top Chord of Truss	20.0	psf
Bottom Chord of Truss	0.0	psf
Total Roof Live Load	**20.0**	**psf**

ROOF SNOW LOAD CALCULATIONS (GABLE & HIP ROOFS)

SLOPED ROOF SNOW LOAD

Ground Snow Load, p_g	30	psf		Exposure of Roof	Partially Exposed
Roof Pitch	3	14.04	deg	Roof Obstructions:	All Other Roofs
Distance from Ridge to Eave, W	61	ft		Terrain Category	C
Risk Category	I			Exposure Factor, C_e	1.0
Flat Roof Snow Load, p_f	20.2	psf		Thermal Factor, C_t	1.2
Balanced, Sloped Roof Snow Load, p_s	**20.2**	**psf**		Sloped Roof Factor, C_s	1
USE	**30.0**	**psf**		Snow Importance Factor	0.8

UNBALANCED SNOW LOAD

				Roof slope run for a rise of 1, S	4.0
Unbalanced Windward Snow Load	**6.048**	**psf**		γ, pcf	17.9
Unbalanced Leeward Snow Load	**44.8**	**psf 14.7 ft from ridge, then 20.16 psf**		h_d, ft	2.75

SEISMIC LOAD CALCULATIONS - EQUIVALENT LATERAL FORCE PROCEDURE

Spectral Response Acceleration, S_S	0.12	Site Class	D
Spectral Response Acceleration, S_1	0.06	Response Modification Factor, R	7
Height to Highest Level of SFRS (ft), h_n	15.17	Deflection Amplification Factor, C_d	4.5
Structure Type	*All other structural systems*	Redundancy Factor, *ρ (12.3.4)*	1.3
Risk Category	I	Weight of structure (lbs), W	612000
Importance Factor, I_e	1	Effective Weight of Snow (lbs)	367200
Seismic Design Category based on S_{DS}	A	Effective Seismic Weight (lbs)	979200
Seismic Design Category based on S_{D1}	B		
Seismic Design Category based on S_1	N/A		

Site Coefficient, F_a and F_v

	S_s						S_1				
	0.25	0.5	0.75	1	1.25		0.1	0.2	0.3	0.4	0.5
A	0.8	0.8	0.8	0.8	0.8	A	0.8	0.8	0.8	0.8	0.8
B	1	1	1	1	1	B	1	1	1	1	1
C	1.2	1.2	1.1	1	1	C	1.7	1.6	1.5	1.4	1.3
D	1.6	1.4	1.2	1.1	1	D	2.4	2	1.8	1.6	1.5
E	2.5	1.7	1.2	0.9	0.9	E	3.5	3.2	2.8	2.4	2.4
F_a	1.6	0	0	0	0	F_v	2.4	0	0	0	0

S_{ms}	0.19	S_{DS}	0.13	C_t	0.02	T_a	0.1537
S_{m1}	0.14	S_{D1}	0.10	x	0.75	C_s	0.02

Seismic Base Shear, V	**17905**	**lbs**	(whole building)
Horizontal Seismic Load Effect, E_h	**23277**	**lbs**	(whole building)
Vertical Seismic Load Effect, E_v	**15667**	**lbs**	(whole building)

BUILDING DIAPHRAGM, ENDWALLS, AND DEFLECTIONS - PERPENDICULAR TO RIDGE

WIND PERPENDICULAR TO RIDGE

Method Developed by Patrick M. McGuire, P.E.

BUILDING INPUTS:			**COLUMN INPUTS:**	**Pinned base - no knee brace**	
Building Width, W	120	(ft)	Columns Per Frame	2	
Building Length, L	255	(ft)	Column Spacing, S	4	(ft)
Height at Eave, H	7.67	(ft)	Column Width, w	3	(in)
Roof Pitch	3	:12	Column Depth, d	5.5	(in)
			Modulus Of Elasticity	1600000	(psi)
ROOF AND ENDWALL INPUTS			**PANEL INPUTS**		
1st Endwall Door Openings	0	(ft)	Model Diaphragm Shear Stiffness, c	2900	lb/in
Is there a Structural Interior Liner?	No		Dimension Normal to Load, a	9	(ft)
2nd Endwall Door Openings	0	(ft)	Dimension Parallel to Load, b	12	(ft)
Is there a Structural Interior Liner?	No		ROOF: Allowable Shear per Layer, V_a	110	(lbs/ft)
Is there a Structural Ceiling?	No		WALLS: Allowable Shear per Layer, V_a	110	(lbs/ft)
OPTIONAL: *(enter to override calculated values)*			**LOADING INPUTS:**	ASCE 7-10	
Stiffness of 1st Endwall		lb/in	Windward Wall Pressure	6.1	(psf)
Stiffness of 2nd Endwall		lb/in	Windward Roof Pressure	-17.8	(psf)
Roof Diaphragm Stiffness		lb/in	Leeward Roof Pressure	-12.6	(psf)
Interior Frame Stiffness	0	lb/in	Leeward Wall Pressure	-11.3	(psf)
INTERMEDIATE CALCULATIONS:			**FINAL RESULTS:**		
Frame Stiffness	0	lb/in	Shear at 1st endwall, Ve_2	5106	(lbs)
1st Endwall Stiffness	34029	lb/in	Shear at 2nd endwall, Ve_2	5106	(lbs)
2nd Endwall Stiffness	34029	lb/in	Roof Diaphragm Shear at 1st Endwall	5263	(lbs)
Diaphragm Stiffness	61902	lb/in	Roof Diaphragm Shear at 2nd Endwall	5263	(lbs)
Ulitmate Wind Resultant at Eave	267	lbs	Deflection at 1st Endwall, y_3	0.15	(in)
Wind Load Multiplier	0.6		Deflection at 2nd Endwall, y_4	0.15	(in)
Resultant at Eave (ASD Level)	160	lbs	Max Frame Deflection	1.46	(in)
Constants: A = -160200 B = 649.02		α = 0.000	Restraining Force at Max Deflection	160	(lbs)

ACTUAL VS ALLOWABLE (LBS)

COMPONENT	ACTUAL		ALLOWABLE	
Shear at 1st Endwall	5106	<	13200	**OK**
Shear at 2nd Endwall	5106	<	13200	**OK**
Roof Diaphragm Shear at 1st Endwall	5263	<	13606	**OK**
Roof Diaphragm Shear at 2nd Endwall	5263	<	13606	**OK**

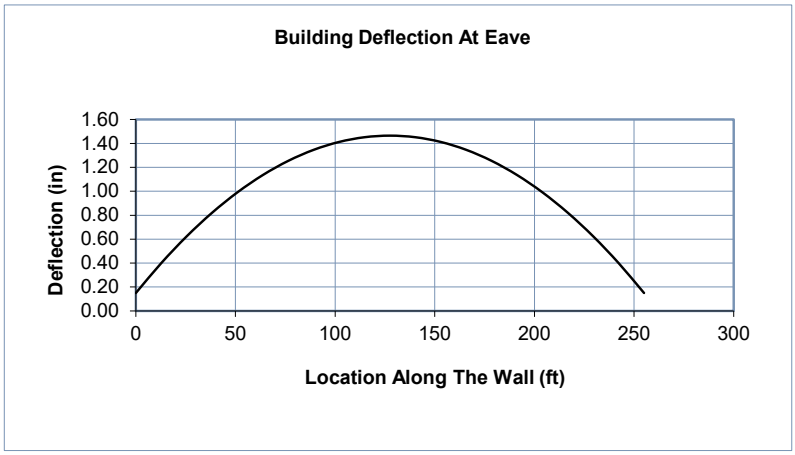

EAVE DEFLECTION

(%)	(ft)	(in)	Δ (in)
0	0	0	0.15
5	12.75	153	0.40
10	25.5	306	0.62
15	38.25	459	0.82
20	51	612	0.99
25	63.75	765	1.14
30	76.5	918	1.25
35	89.25	1071	1.35
40	102	1224	1.41
45	114.75	1377	1.45
50	127.5	1530	1.46
55	140.25	1683	1.45
60	153	1836	1.41
65	165.75	1989	1.35
70	178.5	2142	1.25
75	191.25	2295	1.14
80	204	2448	0.99
85	216.75	2601	0.82
90	229.5	2754	0.62
95	242.25	2907	0.40
100	255	3060	0.15

LOAD PARALLEL TO RIDGE - DESIGN OF SIDEWALLS

BUILDING INPUTS:		
Building Width, W	120	(ft)
Building Length, L	510	(ft)
Height at Eave, H	7.67	(ft)
Top Chord Pitch Side 1	3	:12
Top Chord Pitch Side 2	3	:12
Bottom Chord Pitch Side 1	0	:12
Bottom Chord Pitch Side 2	0	:12

LOADING INPUTS:	ASCE 7-10	
Windward Wall Pressure	4.5	(psf)
Leeward Wall Pressure	-9.6	(psf)

INTERMEDIATE CALCULATIONS:		
Stiffness of Sidewall 1	31193	lb/in
Stiffness of Sidewall 2	96131	lb/in
Truss Area	900	ft^2
Upper Wall Area	460	ft^2
Lower Wall Area	460	ft^2
Effective Wind Area	1360	ft^2
Load on Building (ASD Level)	11494	lbs

WALL ENCLOSURE INPUTS:		
Structural Liner in Sidewall 1	No	
Structural Liner in Sidewall 2	No	
Gable (triangle)	Sheathed	
Wall Below Gable	Sheathed	
Endwall	Shear Wall	
Openings in Sidewall 1	400	ft
Openings in Sidewall 2	171	ft

COLUMN SUPPORT CONDITIONS:	
Column Support at Grade	Pinned
Column Support at Ceiling	Restricted

Column are always restricted at roof line

SHEATHING PANEL INPUTS		
Model Diaphragm Shear Stiffness, c	2900	lb/in
Dimension Normal to Load, a	9	(ft)
Dimension Parallel to Load, b	12	(ft)
Allowable Shear per Layer, V_a	110	(lbs/ft)

FINAL RESULTS:		
Shear at Sidewall 1	2816	(lbs)
Shear at Sidewall 2	8678	(lbs)
Deflection at Sidewall 1	0.09	(in)
Deflection at Sidewall 2	0.09	(in)

ACTUAL VS ALLOWABLE (LBS)

	ACTUAL		ALLOWABLE	
Shear at Sidewall 1	2816	<	12100	**OK**
Shear at Sidewall 2	8678	<	37290	**OK**

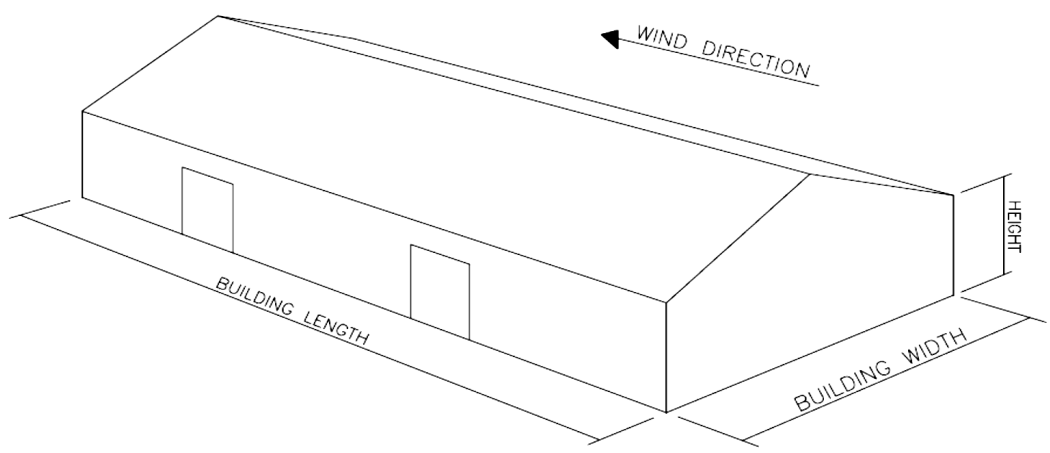

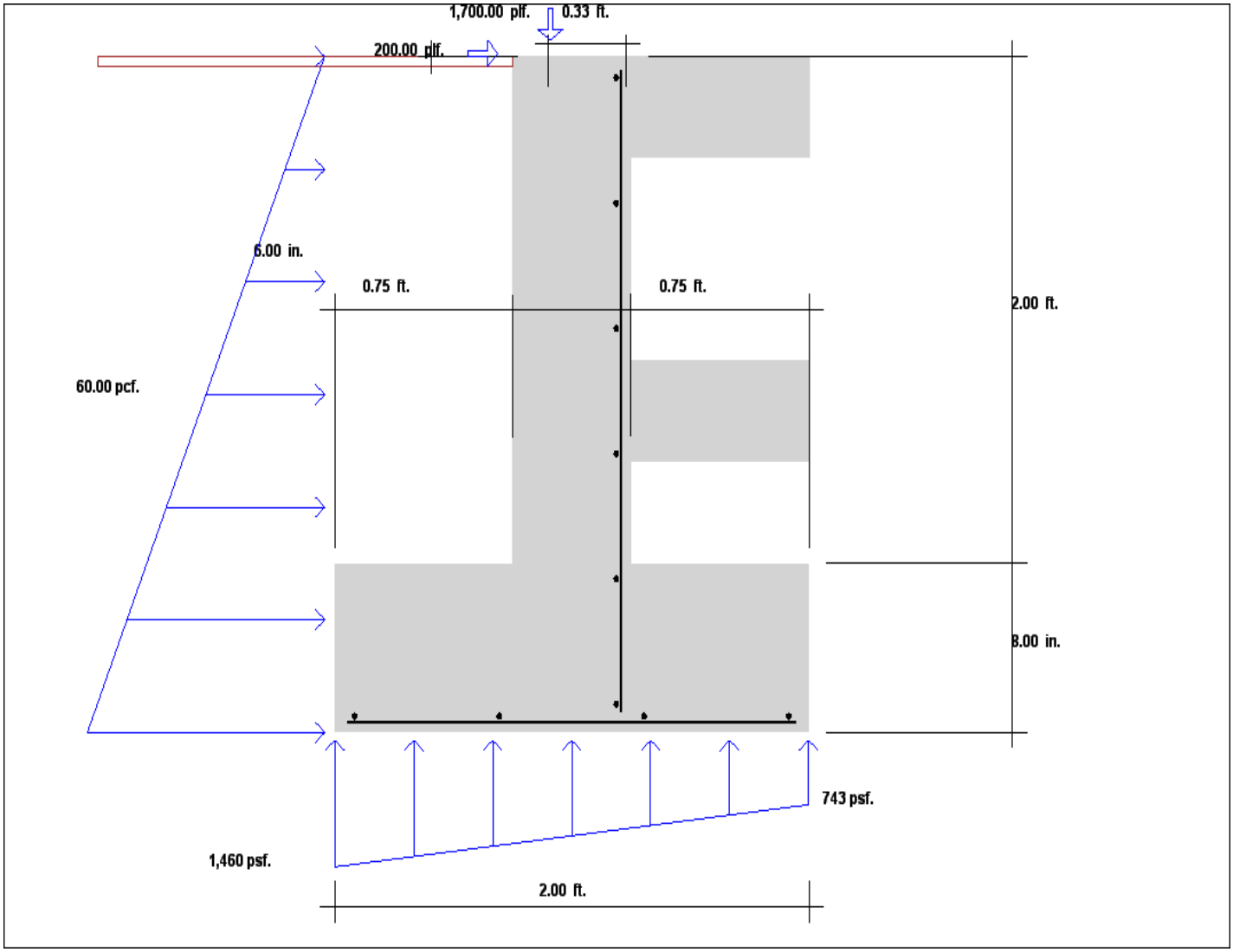
1,700.00 plf.
0.33 ft.
200.00 plf.
6.00 in.
0.75 ft.
0.75 ft.
2.00 ft.
60.00 pcf.
8.00 in.
743 psf.
1,460 psf.
2.00 ft.

```
                 QuickWall 9.0 - RETAINING WALL ANALYSIS AND DESIGN
================================================================================
Job ID  : Bivouac Farm
Job Description : Farrowing Pit, 6in walls                          Designed By :
================================================================================

FOOTING DESIGN METHOD:  Ultimate Strength ACI 318-14
STEM DESIGN METHOD   :  Ultimate Strength ACI 318-14 (Concrete)
WALL TYPE            :  Basement Wall, restricted against sliding

RETAINING WALL DIMENSIONS:
-------------------------------------
Wall Stem Height            =   2.00 ft.
Stem Thickness @ Top        =   6.00 in.
Stem Thickness @ Bottom     =   6.00 in.

Footing Thickness           =   8.00 in.
Heel Width . . . . . . Min. =   0.75 ft.     Design Heel Width =   0.75 ft.
                      Max. =  20.00 ft.
Toe Width  . . . . . . Min. =   0.75 ft.     Design Toe Width  =   0.75 ft.
                      Max. =  10.00 ft.
Footing Key Depth           =   0.00 ft.     Design Key Depth  =   0.00 ft.
Footing Key Width           =   0.00 ft.     Design Key Width  =   0.00 ft.
BackFill Slope (Vert/Horiz) =   0.00 :12

RETAINING WALL LOADS:
-------------------------------------
Horizontal Equivalent Fluid Pressure     =  60.00 pcf.  (Load Case = Soil)
Backfill Height                          =   2.00 ft.
Equivalent Fluid Pressure Angle          =    N/A deg.
Vertical Surcharge on Backfill           =      0 psf.  (Load Case = Soil)
Horizontal Surcharge                     =      0 psf.  (Load Case = Soil)
Vertical Surcharge on Toe                =      0 psf.  (Load Case = Soil)
Wind Load on Fence                       =      0 psf.  (Load Case = Wind)
Fence Height                             =   0.00 ft.

Line Ld.   Type      Magnitude    Dist. (x)    Load Case
  No.    (H or V)      (plf)        (ft.)
  1         V       1,700.00         0.33         Roof
  2         H         200.00         0.00         Wind
  3
  4
  5
  6
  7
  8
  9
  10

Notes:  1. "H" = Horizontal loads.  "V" = Vertical loads.
        2.  Vertical loads are positive down.
```

```
ULTIMATE STRENGTH LOAD COMBINATIONS (Concrete Design):
-------------------------------------

1.4D + 1.4H
1.2D + 1.6L + 1.6H + 0.5R
1.2D + 1.6R + 1.6H + 1.0L
1.2D + 1.6R + 1.6H + 0.5W
1.2D + 1.0W + 1.0L + 0.5R
1.2D + 1.0E + 1.0L + 1.6H + 0.2R
0.9D + 1.0W + 1.6H
0.9D + 1.0E + 1.6H

WORKING STRESS LOAD COMBINATIONS (Stability Checks and Masonry Design):
-------------------------------------

D + L + R + H
D + L + 0.6W + H
D + L + 0.6W + 0.5R + H
D + L + R + 0.3W + H
D + L + R + E/1.4 + H
D + E/1.4 + H
```

```
RETAINING WALL RESISTING FORCES:
------------------------------------
Allowable Soil Pressure         =  3,000 psf.
Passive Equivalent Fluid Press. =    N/A
Passive Soil Height             =    N/A
Coefficient of Friction         =    N/A
Cohesion                        =    N/A

Use Vertical Surcharge as Resisting Wt.? =    N/A

Overturning Safety Factor       =    N/A
Sliding Safety Factor           =    N/A
Limit Reaction to Mid 1/3?      =    N/A


MATERIAL DATA:
------------------------------------
Concrete Strength, f'c      =   4.00 ksi.
Steel Yield Strength, Fy    =  60.00 ksi.

Concrete Unit Weight        = 145.00 pcf.
Soil Unit Weight            = 110.00 pcf.
Fence Weight                =  10.00 psf.


REINFORCING STEEL DATA:
------------------------------------
Concrete cover to center of steel:
          Wall Outside Face =   3.50 in.
 Footing Heel (Bottom Face) =   4.00 in.
  Footing Toe (Bottom Face) =   4.00 in.

Minimum Ratios for Shrinkage and Temperature Reinf:
       Vertical Stem Reinf. = 0.0012
     Horizontal Stem Reinf. = 0.0020
      Footing Reinforcement = 0.0012
```

```
*************************************************
        S U M M A R Y   O F   R E S U L T S
*************************************************
```

DIMENSIONS:

Stem Height	= 2.00 ft.	Heel Length	= 0.75 ft.
Stem Thick. @ Top	= 6.00 in.	Toe Length	= 0.75 ft.
Stem Thick. @ Base	= 6.00 in.	Total Ftg. Width, B	= 2.00 ft.
Footing Thickness	= 8.00 in.	Key Depth	= 0.00 ft.
		Key Width	= 0.00 ft.

ANALYSIS RESULTS:

Max Brg Press. @ Toe	= 743 psf.	Sliding Force	= 0 Lb
@ Heel	= 1,460 psf.	Resisting Force	= N/A
Allowable Brg. Press.	= 3,000 psf.	F.O.S.	= N/A
Resultant Loc From C.L.	= -0.11 ft.	Overturn. Moment	= 0 ft-lb
Kern Point Loc., B/6	= 0.33 ft.	Resisting Moment	= 2,442 ft-lb
Limit Resultant To Mid 1/3?	= N/A	F.O.S.	= N/A

DESIGN RESULTS: Design Method, Stem: USD, ACI 318-14 (Concrete)
Ftg.: Ultimate Strength ACI 318-14

	d (in.)	Mu (ft-k)	Vu (kip)	Phi Vn (kip)	As Flex. (in^2)	As Min. (in^2)	As T+S (in^2)
Stem :	2.50	0.05	0.15	2.85	0.005	0.006	0.089
Toe :	4.00	0.33	0.48	4.55	0.018	0.024	0.115
Heel :	4.00	-0.47	-1.20	4.55	0.026	0.035	0.115
Key :	0.00	0.00	0.00	0.00	0.000	0.000	0.000

Notes: 1. Stem moments are positive if they cause tension on the soil face. Negative if they cause tension on the outside face. Stem shear is positive to the left as measured on a section cut below the top of wall.

2. Heel moments are positive if they cause tension in the top of the footing. Heel shear is positive up as measured on a section cut to the right of the end of the heel.

3. Toe moments are positive if they cause tension in the bottom of the footing. Toe shear is positive up as measured on a section cut to the left of the end of the toe.

```
*************************************************
 S T A B I L I T Y   A N A L Y S I S   R E P O R T
*************************************************

-------------------------------------------------------------------------------
Stability Analysis: Governing Combination = D + L + R + H

----------RESISTING FORCES---------     ---------OVERTURNING FORCES---------
Element    Weight  x  Arm  = Moment     Element      Force  x  Arm  = Moment
Soil          165               268     R at Top       -24    2.67       -63
Ftg.          193    1.00       193     R at Bot.     -190    0.67      -126
Stem          145    1.00       145     Horiz. EFP     213    0.89       190
Vert Sur                               Vert Sur
Vert EFP                               Horiz Sur
Toe Sur.                               Wind
Fence Wt.                              Horiz line
V. line     1,700             1,836    Vert. line
          --------          --------                --------         --------
Sum WT =    2,203    MR =     2,442    Sum F =          0   MOT =         0

-------------------------------------------------------------------------------

Friction Force        =    N/A        F.O.S. Sliding    =   RF / F =    N/A
Passive Pressure      =    N/A        F.O.S. Overturn.  = MR / MOT =    N/A
Cohesion              =    N/A
                         --------          Coef. Vert. Surcharge or Line Load
Resist. Force, Sum RF =      N/A           to Horiz. = EFP / Soil Dens. =  0.545

-------------------------------------------------------------------------------

Resultant Loc From Toe,      X = (MR - MOT) / Sum WT     =    1.11 ft.
Eccentricity From Ftg. C.L., e = (B / 2) - X             =   -0.11 ft.

Soil Pressure @ Toe            = (WT / B) * (1 + 6e/B)   =     743 psf.
Soil Pressure @ Heel           = (WT / B) * (1 - 6e/B)   =   1,460 psf.
```

```
*************************************************
   D E T A I L E D   D E S I G N   R E P O R T
*************************************************
```

STEM DESIGN: Steel Design Comb = 0.9D + 1.0W + 1.6H
Shr Strength @ Base, Phi Vn = 2.85 kip

Dist From Top (ft)	d (in.)	Mu (ft-k)	Vu (kip)	As Flex. (in^2)	As Min. (in^2)	As T+S (in^2)	As Reqd (in^2)	Comb
0.20	2.50	-0.01	-0.04	0.001	0.001	0.086	0.086	2
0.40	2.50	-0.01	-0.03	0.001	0.002	0.086	0.086	2
0.60	2.50	-0.02	-0.02	0.002	0.002	0.086	0.086	2
0.80	2.50	-0.02	-0.01	0.002	0.003	0.086	0.086	2
1.00	2.50	-0.02	0.01	0.002	0.003	0.086	0.086	2
1.20	2.50	-0.02	0.03	0.002	0.002	0.086	0.086	2
1.40	2.50	-0.01	0.06	0.001	0.001	0.086	0.086	2
1.60	2.50	0.00	0.08	0.000	0.001	0.086	0.086	4
1.80	2.50	0.03	0.12	0.002	0.003	0.086	0.086	7
2.00	2.50	0.05	0.15	0.005	0.006	0.089	0.089	7

Vertical Stem Reinforcement:
Shear-Friction Steel Added at Stem Base (ACI 14 22.9), Avf = 0.003 in^2
Available Length for Hook Embedment into Footing = 4.50 in.
Available Length for Straight Embedment into Stem = 22.00 in.

	Development Length Straight (in.)	Hook (in.)	Percent Develop.	Spac. (in.)	50% Cut Off (in.)
#4				18.00	
#5				18.00	
#6				18.00	
#7				18.00	
#8				18.00	
#9				18.00	
#10				18.00	
#11				18.00	

Horizontal Stem Reinforcement:
Area of steel for Shrinkage and Temp. Reinforcement = 0.144 in^2

	-----Spacing, in.-----		------Total Bars------	
	I.F. Only	EA. Face	I.F. Only	EA. Face
#4	16.67	18.00	3.00	3.00
#5	18.00	18.00	3.00	3.00
#6	18.00	18.00	3.00	3.00
#7	18.00	18.00	3.00	3.00
#8	18.00	18.00	3.00	3.00
#9	18.00	18.00	3.00	3.00
#10	18.00	18.00	3.00	3.00
#11	18.00	18.00	3.00	3.00

TOE DESIGN:

* Steel Design Comb. = 1.2D + 1.6R + 1.6H + 1.0L
* Thickness Design Comb. = 1.2D + 1.6R + 1.6H + 0.5W
* Available Length for Hook Embedment into Stem = 3.00 in.
* Available Length for Straight Embed. into Toe = 7.00 in.

d (in.)	Mu (ft-k)	Vu (kip)	Phi Vn (kip)	As Flex. (in^2)	As Min. (in^2)	As T+S (in^2)	As Req'd (in^2)
4.00	0.33	0.48	4.55	0.018	0.024	0.115	0.115

	Development Length Straight (in.)	Hook (in.)	Percent Develop.	Spac. (in.)
#4				18.00
#5				18.00
#6				18.00
#7				18.00
#8				18.00
#9				18.00
#10				18.00
#11				18.00

HEEL DESIGN:

* Steel Design Comb. = 1.2D + 1.6R + 1.6H + 1.0L
* Thickness Design Comb. = 1.2D + 1.6R + 1.6H + 1.0L
* Available Length for Straight Embedment into Toe = 13.00 in.
* Available Length for Straight Embedment into Heel = 7.00 in.

d (in.)	Mu (ft-k)	Vu (kip)	Phi Vn (kip)	As Flex. (in^2)	As Min. (in^2)	As T+S (in^2)	As Req'd (in^2)
4.00	-0.47	-1.20	4.55	0.026	0.035	0.115	0.115

	Development Length Straight (in.)	Hook (in.)	Percent Develop.	Spac. (in.)
#4				18.00
#5				18.00
#6				18.00
#7				18.00
#8				18.00
#9				18.00
#10				18.00
#11				18.00

LONGITUDINAL FOOTING REINFORCEMENT (TEMP & SHRINK ONLY):

	Spacing (in.)
#4	20.83
#5	32.29
#6	45.83
#7	62.50
#8	82.29
#9	104.17
#10	132.29
#11	162.50

Farrowing Pit, 8" Walls

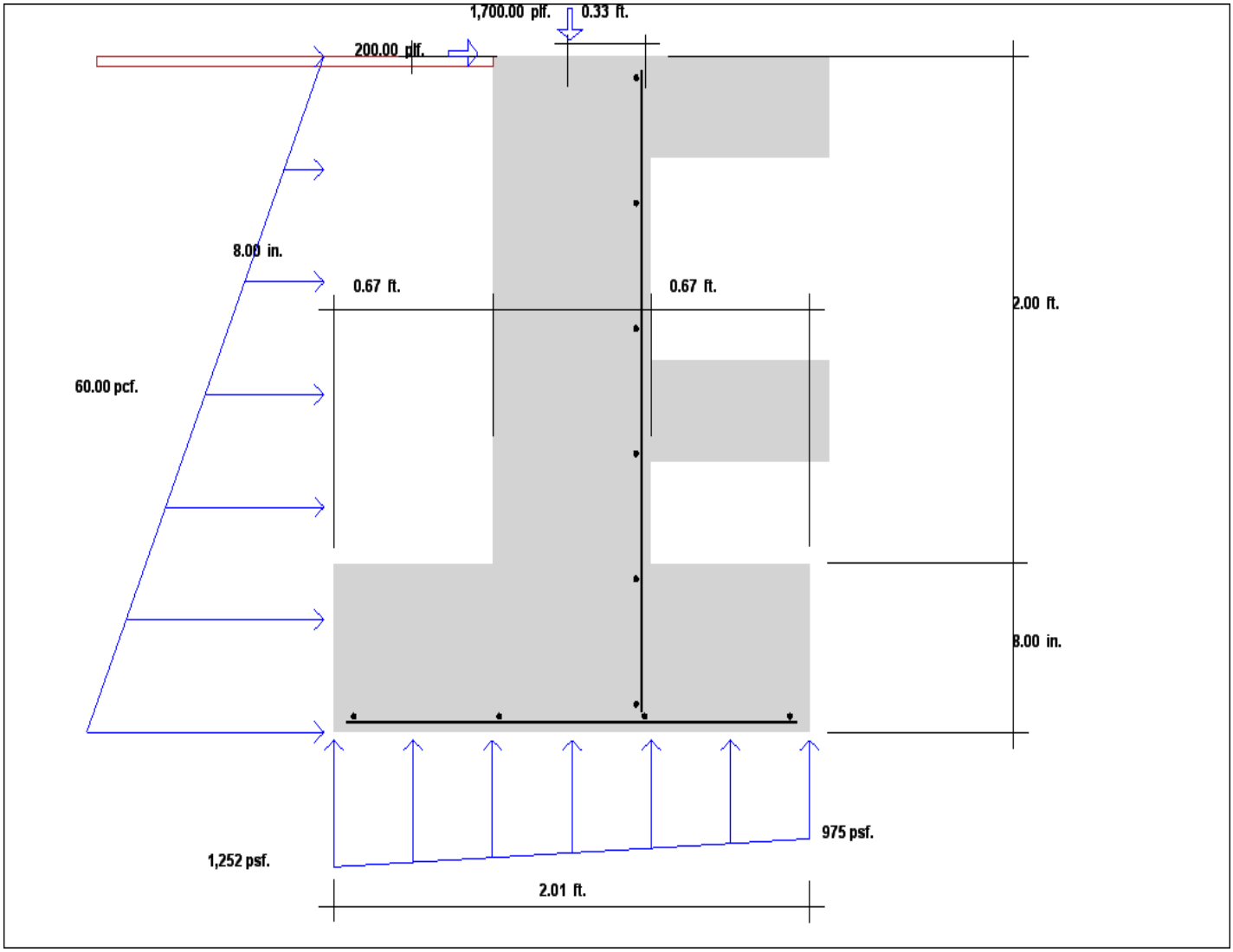

QuickWall 9.0 - RETAINING WALL ANALYSIS AND DESIGN

Job ID : Bivouac Farm
Job Description : Farrowing Pit, 8in walls Designed By :

FOOTING DESIGN METHOD: Ultimate Strength ACI 318-14
STEM DESIGN METHOD : Ultimate Strength ACI 318-14 (Concrete)
WALL TYPE : Basement Wall, restricted against sliding

RETAINING WALL DIMENSIONS:

Wall Stem Height		=	2.00 ft.		
Stem Thickness @ Top		=	8.00 in.		
Stem Thickness @ Bottom		=	8.00 in.		
Footing Thickness		=	8.00 in.		
Heel Width	Min.	=	0.67 ft.	Design Heel Width =	0.67 ft.
	Max.	=	20.00 ft.		
Toe Width	Min.	=	0.67 ft.	Design Toe Width =	0.67 ft.
	Max.	=	10.00 ft.		
Footing Key Depth		=	0.00 ft.	Design Key Depth =	0.00 ft.
Footing Key Width		=	0.00 ft.	Design Key Width =	0.00 ft.
BackFill Slope (Vert/Horiz)		=	0.00 :12		

RETAINING WALL LOADS:

Horizontal Equivalent Fluid Pressure	=	60.00 pcf.	(Load Case = Soil)
Backfill Height	=	2.00 ft.	
Equivalent Fluid Pressure Angle	=	N/A deg.	
Vertical Surcharge on Backfill	=	0 psf.	(Load Case = Soil)
Horizontal Surcharge	=	0 psf.	(Load Case = Soil)
Vertical Surcharge on Toe	=	0 psf.	(Load Case = Soil)
Wind Load on Fence	=	0 psf.	(Load Case = Wind)
Fence Height	=	0.00 ft.	

Line No.	Ld. Type (H or V)	Magnitude (plf)	Dist. (x) (ft.)	Load Case
1	V	1,700.00	0.33	Roof
2	H	200.00	0.00	Wind
3				
4				
5				
6				
7				
8				
9				
10				

Notes: 1. "H" = Horizontal loads. "V" = Vertical loads.
2. Vertical loads are positive down.

```
ULTIMATE STRENGTH LOAD COMBINATIONS (Concrete Design):
-------------------------------------

1.4D + 1.4H
1.2D + 1.6L + 1.6H + 0.5R
1.2D + 1.6R + 1.6H + 1.0L
1.2D + 1.6R + 1.6H + 0.5W
1.2D + 1.0W + 1.0L + 0.5R
1.2D + 1.0E + 1.0L + 1.6H + 0.2R
0.9D + 1.0W + 1.6H
0.9D + 1.0E + 1.6H

WORKING STRESS LOAD COMBINATIONS (Stability Checks and Masonry Design):
-------------------------------------

D + L + R + H
D + L + 0.6W + H
D + L + 0.6W + 0.5R + H
D + L + R + 0.3W + H
D + L + R + E/1.4 + H
D + E/1.4 + H
```

```
RETAINING WALL RESISTING FORCES:
------------------------------------
Allowable Soil Pressure         =  3,000 psf.
Passive Equivalent Fluid Press. =    N/A
Passive Soil Height             =    N/A
Coefficient of Friction         =    N/A
Cohesion                        =    N/A

Use Vertical Surcharge as Resisting Wt.? =    N/A

Overturning Safety Factor       =    N/A
Sliding Safety Factor           =    N/A
Limit Reaction to Mid 1/3?      =    N/A


MATERIAL DATA:
------------------------------------
Concrete Strength, f'c      =   4.00 ksi.
Steel Yield Strength, Fy    =  60.00 ksi.

Concrete Unit Weight        = 145.00 pcf.
Soil Unit Weight            = 110.00 pcf.
Fence Weight                =  10.00 psf.


REINFORCING STEEL DATA:
------------------------------------
Concrete cover to center of steel:
          Wall Outside Face =   4.00 in.
 Footing Heel (Bottom Face) =   4.00 in.
  Footing Toe (Bottom Face) =   4.00 in.

Minimum Ratios for Shrinkage and Temperature Reinf:
       Vertical Stem Reinf. = 0.0012
     Horizontal Stem Reinf. = 0.0020
      Footing Reinforcement = 0.0012
```

```
*************************************************
        S U M M A R Y   O F   R E S U L T S
*************************************************
```

DIMENSIONS:

Stem Height	= 2.00 ft.	Heel Length	= 0.67 ft.
Stem Thick. @ Top	= 8.00 in.	Toe Length	= 0.67 ft.
Stem Thick. @ Base	= 8.00 in.	Total Ftg. Width, B	= 2.01 ft.
Footing Thickness	= 8.00 in.	Key Depth	= 0.00 ft.
		Key Width	= 0.00 ft.

ANALYSIS RESULTS:

Max Brg Press. @ Toe	= 975 psf.	Sliding Force	= 0 Lb
@ Heel	= 1,252 psf.	Resisting Force	= N/A
Allowable Brg. Press.	= 3,000 psf.	F.O.S.	= N/A
Resultant Loc From C.L.	= -0.04 ft.	Overturn. Moment	= 0 ft-lb
Kern Point Loc., B/6	= 0.33 ft.	Resisting Moment	= 2,335 ft-lb
Limit Resultant To Mid 1/3?	= N/A	F.O.S.	= N/A

DESIGN RESULTS: Design Method, Stem: USD, ACI 318-14 (Concrete)
Ftg.: Ultimate Strength ACI 318-14

	d (in.)	Mu (ft-k)	Vu (kip)	Phi Vn (kip)	As Flex. (in^2)	As Min. (in^2)	As T+S (in^2)
Stem :	4.00	0.05	0.15	4.55	0.003	0.004	0.117
Toe :	4.00	0.32	0.48	4.55	0.018	0.024	0.115
Heel :	4.00	-0.32	-0.94	4.55	0.018	0.024	0.115
Key :	0.00	0.00	0.00	0.00	0.000	0.000	0.000

Notes: 1. Stem moments are positive if they cause tension on the soil face. Negative if they cause tension on the outside face. Stem shear is positive to the left as measured on a section cut below the top of wall.

2. Heel moments are positive if they cause tension in the top of the footing. Heel shear is positive up as measured on a section cut to the right of the end of the heel.

3. Toe moments are positive if they cause tension in the bottom of the footing. Toe shear is positive up as measured on a section cut to the left of the end of the toe.

```
*************************************************
 S T A B I L I T Y   A N A L Y S I S   R E P O R T
*************************************************

-------------------------------------------------------------------------------
Stability Analysis: Governing Combination = D + L + R + H

----------RESISTING FORCES---------     ---------OVERTURNING FORCES---------
Element    Weight  x  Arm  = Moment     Element      Force  x  Arm  = Moment
Soil          147               246     R at Top       -24    2.67       -63
Ftg.          194    1.00       195     R at Bot.     -190    0.67      -126
Stem          193    1.00       194     Horiz. EFP     213    0.89       190
Vert Sur                               Vert Sur
Vert EFP                               Horiz Sur
Toe Sur.                               Wind
Fence Wt.                              Horiz line
V. line     1,700             1,700    Vert. line
          --------          --------                --------         --------
Sum WT =    2,235    MR =     2,335    Sum F =          0   MOT =         0

-------------------------------------------------------------------------------

Friction Force        =    N/A        F.O.S. Sliding    =   RF / F =    N/A
Passive Pressure      =    N/A        F.O.S. Overturn.  = MR / MOT =    N/A
Cohesion              =    N/A
                         --------          Coef. Vert. Surcharge or Line Load
Resist. Force, Sum RF =      N/A           to Horiz. = EFP / Soil Dens. =  0.545

-------------------------------------------------------------------------------

Resultant Loc From Toe,      X = (MR - MOT) / Sum WT     =    1.04 ft.
Eccentricity From Ftg. C.L., e = (B / 2) - X             =   -0.04 ft.

Soil Pressure @ Toe            = (WT / B) * (1 + 6e/B)   =     975 psf.
Soil Pressure @ Heel           = (WT / B) * (1 - 6e/B)   =   1,252 psf.
```

```
*************************************************
   D E T A I L E D   D E S I G N   R E P O R T
*************************************************
```

STEM DESIGN: Steel Design Comb = 0.9D + 1.0W + 1.6H
Shr Strength @ Base, Phi Vn = 4.55 kip

Dist From Top (ft)	d (in.)	Mu (ft-k)	Vu (kip)	As Flex. (in^2)	As Min. (in^2)	As T+S (in^2)	As Reqd (in^2)	Comb
0.20	4.00	-0.01	-0.04	0.000	0.001	0.115	0.115	2
0.40	4.00	-0.01	-0.03	0.001	0.001	0.115	0.115	2
0.60	4.00	-0.02	-0.02	0.001	0.001	0.115	0.115	2
0.80	4.00	-0.02	-0.01	0.001	0.002	0.115	0.115	2
1.00	4.00	-0.02	0.01	0.001	0.002	0.115	0.115	2
1.20	4.00	-0.02	0.03	0.001	0.001	0.115	0.115	2
1.40	4.00	-0.01	0.06	0.001	0.001	0.115	0.115	2
1.60	4.00	0.00	0.08	0.000	0.000	0.115	0.115	4
1.80	4.00	0.03	0.12	0.001	0.002	0.115	0.115	7
2.00	4.00	0.05	0.15	0.003	0.004	0.117	0.117	7

Vertical Stem Reinforcement:
Shear-Friction Steel Added at Stem Base (ACI 14 22.9), Avf = 0.002 in^2
Available Length for Hook Embedment into Footing = 4.50 in.
Available Length for Straight Embedment into Stem = 22.00 in.

	Development Length Straight (in.)	Hook (in.)	Percent Develop.	Spac. (in.)	50% Cut Off (in.)
#4				18.00	
#5				18.00	
#6				18.00	
#7				18.00	
#8				18.00	
#9				18.00	
#10				18.00	
#11				18.00	

Horizontal Stem Reinforcement:
Area of steel for Shrinkage and Temp. Reinforcement = 0.192 in^2

	-----Spacing, in.-----		------Total Bars------	
	I.F. Only	EA. Face	I.F. Only	EA. Face
#4	12.50	18.00	3.00	3.00
#5	18.00	18.00	3.00	3.00
#6	18.00	18.00	3.00	3.00
#7	18.00	18.00	3.00	3.00
#8	18.00	18.00	3.00	3.00
#9	18.00	18.00	3.00	3.00
#10	18.00	18.00	3.00	3.00
#11	18.00	18.00	3.00	3.00

TOE DESIGN:

* Steel Design Comb. = 1.2D + 1.6R + 1.6H + 1.0L
* Thickness Design Comb. = 1.2D + 1.6R + 1.6H + 1.0L
* Available Length for Hook Embedment into Stem = 4.50 in.
* Available Length for Straight Embed. into Toe = 6.04 in.

d (in.)	Mu (ft-k)	Vu (kip)	Phi Vn (kip)	As Flex. (in^2)	As Min. (in^2)	As T+S (in^2)	As Req'd (in^2)
4.00	0.32	0.48	4.55	0.018	0.024	0.115	0.115

	Development Length Straight (in.)	Hook (in.)	Percent Develop.	Spac. (in.)
#4				18.00
#5				18.00
#6				18.00
#7				18.00
#8				18.00
#9				18.00
#10				18.00
#11				18.00

HEEL DESIGN:

* Steel Design Comb. = 1.2D + 1.6R + 1.6H + 1.0L
* Thickness Design Comb. = 1.2D + 1.6R + 1.6H + 1.0L
* Available Length for Straight Embedment into Toe = 14.04 in.
* Available Length for Straight Embedment into Heel = 6.04 in.

d (in.)	Mu (ft-k)	Vu (kip)	Phi Vn (kip)	As Flex. (in^2)	As Min. (in^2)	As T+S (in^2)	As Req'd (in^2)
4.00	-0.32	-0.94	4.55	0.018	0.024	0.115	0.115

	Development Length Straight (in.)	Hook (in.)	Percent Develop.	Spac. (in.)
#4				18.00
#5				18.00
#6				18.00
#7				18.00
#8				18.00
#9				18.00
#10				18.00
#11				18.00

LONGITUDINAL FOOTING REINFORCEMENT (TEMP & SHRINK ONLY):

	Spacing (in.)
#4	20.83
#5	32.29
#6	45.83
#7	62.50
#8	82.29
#9	104.17
#10	132.29
#11	162.50

Farrowing Pit, 10" Walls

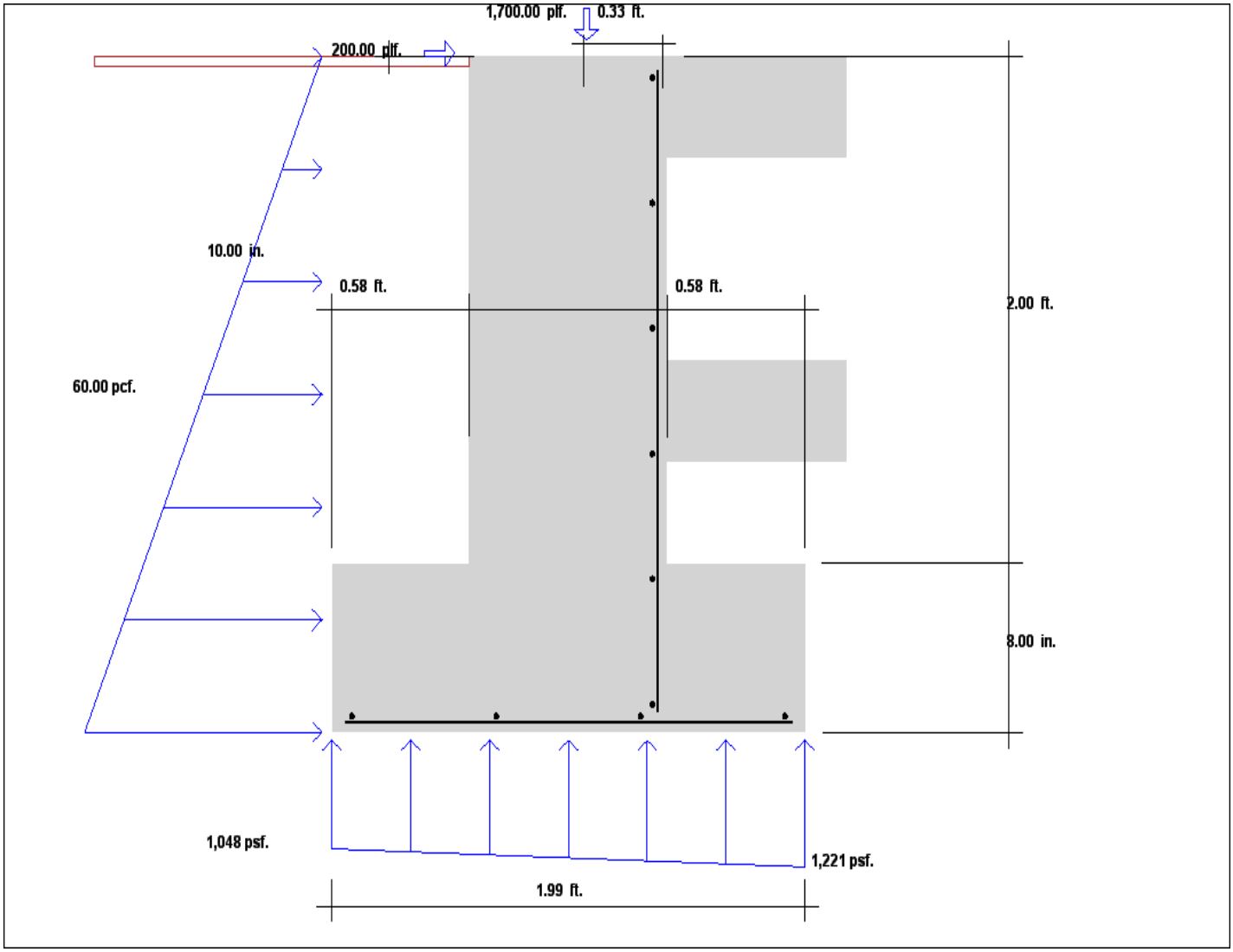

QuickWall 9.0 - RETAINING WALL ANALYSIS AND DESIGN

Job ID : Bivouac Farm
Job Description : Farrowing Pit, 10in walls Designed By :

FOOTING DESIGN METHOD: Ultimate Strength ACI 318-14
STEM DESIGN METHOD : Ultimate Strength ACI 318-14 (Concrete)
WALL TYPE : Basement Wall, restricted against sliding

RETAINING WALL DIMENSIONS:

Wall Stem Height		=	2.00 ft.		
Stem Thickness @ Top		=	10.00 in.		
Stem Thickness @ Bottom		=	10.00 in.		
Footing Thickness		=	8.00 in.		
Heel Width	Min.	=	0.58 ft.	Design Heel Width =	0.58 ft.
	Max.	=	20.00 ft.		
Toe Width	Min.	=	0.58 ft.	Design Toe Width =	0.58 ft.
	Max.	=	10.00 ft.		
Footing Key Depth		=	0.00 ft.	Design Key Depth =	0.00 ft.
Footing Key Width		=	0.00 ft.	Design Key Width =	0.00 ft.
BackFill Slope (Vert/Horiz)		=	0.00 :12		

RETAINING WALL LOADS:

Horizontal Equivalent Fluid Pressure	=	60.00 pcf.	(Load Case = Soil)
Backfill Height	=	2.00 ft.	
Equivalent Fluid Pressure Angle	=	N/A deg.	
Vertical Surcharge on Backfill	=	0 psf.	(Load Case = Soil)
Horizontal Surcharge	=	0 psf.	(Load Case = Soil)
Vertical Surcharge on Toe	=	0 psf.	(Load Case = Soil)
Wind Load on Fence	=	0 psf.	(Load Case = Wind)
Fence Height	=	0.00 ft.	

Line No.	Ld. Type (H or V)	Magnitude (plf)	Dist. (x) (ft.)	Load Case
1	V	1,700.00	0.33	Roof
2	H	200.00	0.00	Wind
3				
4				
5				
6				
7				
8				
9				
10				

Notes: 1. "H" = Horizontal loads. "V" = Vertical loads.
2. Vertical loads are positive down.

```
ULTIMATE STRENGTH LOAD COMBINATIONS (Concrete Design):
-------------------------------------

1.4D + 1.4H
1.2D + 1.6L + 1.6H + 0.5R
1.2D + 1.6R + 1.6H + 1.0L
1.2D + 1.6R + 1.6H + 0.5W
1.2D + 1.0W + 1.0L + 0.5R
1.2D + 1.0E + 1.0L + 1.6H + 0.2R
0.9D + 1.0W + 1.6H
0.9D + 1.0E + 1.6H

WORKING STRESS LOAD COMBINATIONS (Stability Checks and Masonry Design):
-------------------------------------

D + L + R + H
D + L + 0.6W + H
D + L + 0.6W + 0.5R + H
D + L + R + 0.3W + H
D + L + R + E/1.4 + H
D + E/1.4 + H
```

```
RETAINING WALL RESISTING FORCES:
------------------------------------
Allowable Soil Pressure         =  3,000 psf.
Passive Equivalent Fluid Press. =    N/A
Passive Soil Height             =    N/A
Coefficient of Friction         =    N/A
Cohesion                        =    N/A

Use Vertical Surcharge as Resisting Wt.? =    N/A

Overturning Safety Factor       =    N/A
Sliding Safety Factor           =    N/A
Limit Reaction to Mid 1/3?      =    N/A


MATERIAL DATA:
------------------------------------
Concrete Strength, f'c      =   4.00 ksi.
Steel Yield Strength, Fy    =  60.00 ksi.

Concrete Unit Weight        = 145.00 pcf.
Soil Unit Weight            = 110.00 pcf.
Fence Weight                =  10.00 psf.


REINFORCING STEEL DATA:
------------------------------------
Concrete cover to center of steel:
          Wall Outside Face =   5.00 in.
 Footing Heel (Bottom Face) =   4.00 in.
  Footing Toe (Bottom Face) =   4.00 in.

Minimum Ratios for Shrinkage and Temperature Reinf:
       Vertical Stem Reinf. = 0.0012
     Horizontal Stem Reinf. = 0.0020
      Footing Reinforcement = 0.0012
```

```
*************************************************
       S U M M A R Y   O F   R E S U L T S
*************************************************
```

DIMENSIONS:

Stem Height	= 2.00 ft.	Heel Length	= 0.58 ft.
Stem Thick. @ Top	= 10.00 in.	Toe Length	= 0.58 ft.
Stem Thick. @ Base	= 10.00 in.	Total Ftg. Width, B	= 1.99 ft.
Footing Thickness	= 8.00 in.	Key Depth	= 0.00 ft.
		Key Width	= 0.00 ft.

ANALYSIS RESULTS:

Max Brg Press. @ Toe	= 1,221 psf.	Sliding Force	= 0 Lb
@ Heel	= 1,048 psf.	Resisting Force	= N/A
Allowable Brg. Press.	= 3,000 psf.	F.O.S.	= N/A
Resultant Loc From C.L.	= 0.03 ft.	Overturn. Moment	= 0 ft-lb
Kern Point Loc., B/6	= 0.33 ft.	Resisting Moment	= 2,197 ft-lb
Limit Resultant To Mid 1/3?	= N/A	F.O.S.	= N/A

DESIGN RESULTS: Design Method, Stem: USD, ACI 318-14 (Concrete)
Ftg.: Ultimate Strength ACI 318-14

	d (in.)	Mu (ft-k)	Vu (kip)	Phi Vn (kip)	As Flex. (in^2)	As Min. (in^2)	As T+S (in^2)
Stem :	5.00	0.05	0.15	5.69	0.002	0.003	0.145
Toe :	4.00	0.29	0.43	4.55	0.016	0.022	0.115
Heel :	4.00	-0.20	-0.69	4.55	0.011	0.015	0.115
Key :	0.00	0.00	0.00	0.00	0.000	0.000	0.000

Notes: 1. Stem moments are positive if they cause tension on the soil face. Negative if they cause tension on the outside face. Stem shear is positive to the left as measured on a section cut below the top of wall.

2. Heel moments are positive if they cause tension in the top of the footing. Heel shear is positive up as measured on a section cut to the right of the end of the heel.

3. Toe moments are positive if they cause tension in the bottom of the footing. Toe shear is positive up as measured on a section cut to the left of the end of the toe.

```
*************************************************
 S T A B I L I T Y   A N A L Y S I S   R E P O R T
*************************************************

-------------------------------------------------------------------------------
Stability Analysis: Governing Combination = D + L + R + H

----------RESISTING FORCES---------     ---------OVERTURNING FORCES---------
Element    Weight  x  Arm  = Moment     Element      Force  x  Arm  = Moment
Soil          128               217     R at Top       -24    2.67       -63
Ftg.          193    1.00       192     R at Bot.     -190    0.67      -126
Stem          242    1.00       241     Horiz. EFP     213    0.89       190
Vert Sur                               Vert Sur
Vert EFP                               Horiz Sur
Toe Sur.                               Wind
Fence Wt.                              Horiz line
V. line     1,700             1,547    Vert. line
          --------          --------                --------         --------
Sum WT =    2,262    MR =     2,197    Sum F =          0   MOT =         0

-------------------------------------------------------------------------------

Friction Force        =    N/A        F.O.S. Sliding    =   RF / F =    N/A
Passive Pressure      =    N/A        F.O.S. Overturn.  = MR / MOT =    N/A
Cohesion              =    N/A
                         --------          Coef. Vert. Surcharge or Line Load
Resist. Force, Sum RF =      N/A           to Horiz. = EFP / Soil Dens. =  0.545

-------------------------------------------------------------------------------

Resultant Loc From Toe,      X = (MR - MOT) / Sum WT     =    0.97 ft.
Eccentricity From Ftg. C.L., e = (B / 2) - X             =    0.03 ft.

Soil Pressure @ Toe            = (WT / B) * (1 + 6e/B)   =   1,221 psf.
Soil Pressure @ Heel           = (WT / B) * (1 - 6e/B)   =   1,048 psf.
```

```
*************************************************
   D E T A I L E D   D E S I G N   R E P O R T
*************************************************
```

STEM DESIGN: Steel Design Comb = 0.9D + 1.0W + 1.6H
Shr Strength @ Base, Phi Vn = 5.69 kip

Dist From Top (ft)	d (in.)	Mu (ft-k)	Vu (kip)	As Flex. (in^2)	As Min. (in^2)	As T+S (in^2)	As Reqd (in^2)	Comb
0.20	5.00	-0.01	-0.04	0.000	0.000	0.144	0.144	2
0.40	5.00	-0.01	-0.03	0.001	0.001	0.144	0.144	2
0.60	5.00	-0.02	-0.02	0.001	0.001	0.144	0.144	2
0.80	5.00	-0.02	-0.01	0.001	0.001	0.144	0.144	2
1.00	5.00	-0.02	0.01	0.001	0.001	0.144	0.144	2
1.20	5.00	-0.02	0.03	0.001	0.001	0.144	0.144	2
1.40	5.00	-0.01	0.06	0.000	0.001	0.144	0.144	2
1.60	5.00	0.00	0.08	0.000	0.000	0.144	0.144	4
1.80	5.00	0.03	0.12	0.001	0.001	0.144	0.144	7
2.00	5.00	0.05	0.15	0.002	0.003	0.145	0.145	7

Vertical Stem Reinforcement:
Available Length for Hook Embedment into Footing = 4.50 in.
Available Length for Straight Embedment into Stem = 22.00 in.

	Development Length Straight (in.)	Hook (in.)	Percent Develop.	Spac. (in.)	50% Cut Off (in.)
#4				16.57	
#5				18.00	
#6				18.00	
#7				18.00	
#8				18.00	
#9				18.00	
#10				18.00	
#11				18.00	

Horizontal Stem Reinforcement:
Area of steel for Shrinkage and Temp. Reinforcement = 0.240 in^2

	-----Spacing, in.-----		------Total Bars------	
	I.F. Only	EA. Face	I.F. Only	EA. Face
#4	10.00	18.00	4.00	3.00
#5	15.50	18.00	3.00	3.00
#6	18.00	18.00	3.00	3.00
#7	18.00	18.00	3.00	3.00
#8	18.00	18.00	3.00	3.00
#9	18.00	18.00	3.00	3.00
#10	18.00	18.00	3.00	3.00
#11	18.00	18.00	3.00	3.00

TOE DESIGN:

* Steel Design Comb. = 1.2D + 1.6R + 1.6H + 0.5W
* Thickness Design Comb. = 1.2D + 1.6R + 1.6H + 1.0L
* Available Length for Hook Embedment into Stem = 5.50 in.
* Available Length for Straight Embed. into Toe = 4.96 in.

d (in.)	Mu (ft-k)	Vu (kip)	Phi Vn (kip)	As Flex. (in^2)	As Min. (in^2)	As T+S (in^2)	As Req'd (in^2)
4.00	0.29	0.43	4.55	0.016	0.022	0.115	0.115

	Development Length Straight (in.)	Hook (in.)	Percent Develop.	Spac. (in.)
#4				18.00
#5				18.00
#6				18.00
#7				18.00
#8				18.00
#9				18.00
#10				18.00
#11				18.00

HEEL DESIGN:

* Steel Design Comb. = 1.2D + 1.6R + 1.6H + 1.0L
* Thickness Design Comb. = 1.2D + 1.6R + 1.6H + 1.0L
* Available Length for Straight Embedment into Toe = 14.96 in.
* Available Length for Straight Embedment into Heel = 4.96 in.

d (in.)	Mu (ft-k)	Vu (kip)	Phi Vn (kip)	As Flex. (in^2)	As Min. (in^2)	As T+S (in^2)	As Req'd (in^2)
4.00	-0.20	-0.69	4.55	0.011	0.015	0.115	0.115

	Development Length Straight (in.)	Hook (in.)	Percent Develop.	Spac. (in.)
#4				18.00
#5				18.00
#6				18.00
#7				18.00
#8				18.00
#9				18.00
#10				18.00
#11				18.00

LONGITUDINAL FOOTING REINFORCEMENT (TEMP & SHRINK ONLY):

	Spacing (in.)
#4	20.83
#5	32.29
#6	45.83
#7	62.50
#8	82.29
#9	104.17
#10	132.29
#11	162.50

Concrete Footing Design

Job: **Bivouac Farm, Center Roof Support Footing**
Description: Spread Footing Under Steel Column

Designed By:
Checked By:
Program: Spread Footing Design v3.2 Code: ACI 2014

SOIL DATA				CONCRETE DATA				COLUMN DATA			
Max. Vert Press.	=	3.000	K /Ft ^2	F'c	=	3.000	K /In ^2	F'c	=	4.000	K /In ^2
Max. Flexural Press.	=	3.500	K /Ft ^2	Density	=	150.000	Lb/Ft ^3	X Dim.	=	18.000	In
Density	=	100.000	Lb/Ft ^3	Fy	=	60.000	K /In ^2	Z Dim.	=	18.000	In
Phi Angle	=	30.000	Deg					X Offset	=	0.000	Ft
Coeff. of Friction	=	0.330						Z Offset	=	0.000	Ft
Cohesion	=	0.000	Lb/Ft ^2	**SURCHARGE DATA**							
Ftg. Depth	=	2.000	Ft	+X,+Z Quadrant	=	0.000	K /Ft ^2				
FS Uplift	=	1.000		+X,-Z Quadrant	=	0.000	K /Ft ^2	**BASE PLATE DATA**			
FS Overturning	=	1.500		-X,-Z Quadrant	=	0.000	K /Ft ^2	X Dim.	=	18.000	In
FS Sliding	=	1.500		-X,+Z Quadrant	=	0.000	K /Ft ^2	Z Dim.	=	18.000	In

C O L U M N L O A D D E S C R I P T I O N S

COLUMN LOAD	DESCRIPTION
1	Downward

L O A D C O M B I N A T I O N S

LOAD COMBINATION	DESCRIPTION
1	1.4D
2	1.2D + 1.6L + 0.5R
3	1.2D + L + 1.6R
4	1.2D + 0.8W + 1.6R
5	1.2D + L + 1.6W + 0.5R
6	1.2D + L + 1.4E + 0.2R
7	0.9D + 1.6W
8	0.9D + 1.4E
9	1.2D - 0.8W + 1.6R
10	1.2D + L - 1.6W + 0.5R
11	1.2D + L - 1.4E + 0.2R
12	0.9D - 1.6W
13	0.9D - 1.4E

U N F A C T O R E D L O A D S I N P U T

COLUMN LOAD No. 1	DEAD LOAD		LIVE LOAD		WIND LOAD		EARTHQUAKE LOAD		ROOF LOAD	
Vertical =	-36.000	K	-108.000	K	0.000	K	0.000	K	0.000	K
Moment X =	0.000	Ft-K	0.000	Ft-K	0.000	Ft-K	0.000	Ft-K	0.000	Ft-K
Moment Z =	0.000	Ft-K	0.000	Ft-K	0.000	Ft-K	0.000	Ft-K	0.000	Ft-K
Horizontal X =	0.000	K								
Z =	0.000	K								

F O O T I N G O U T P U T

FOOTING DESIGN

X Dimension =	10.000	Ft	
Z Dimension =	10.000	Ft	
Thickness =	16.000	In	
Max. Press. =	1.507	K /Ft ^2	

SHEAR STRESSES (ONE WAY)

+X Area =	0.046	K /In ^2
-X Area =	0.046	K /In ^2
+Z Area =	0.052	K /In ^2
-Z Area =	0.052	K /In ^2
Allow. =	0.082	K /In ^2

SHEAR STRESSES (TWO WAY)

+X Area =	0.141	K /In ^2
-X Area =	0.141	K /In ^2
+Z Area =	0.141	K /In ^2
-Z Area =	0.141	K /In ^2
Allow. =	0.164	K /In ^2

X Dimension = User Defined Minimum
Z Dimension = User Defined Minimum
Thickness = User Defined Minimum
Max. Pressure Governing Column = 1, Combination = 2
Design Controlled by Minimum Values

BOTTOM STEEL DESIGN (Parallel to X Axis)
Governing Column = 1, Combination = 2
Moment (+X Area) = 195.075 Ft-K

BOTTOM STEEL DESIGN (Parallel to Z Axis)
Governing Column = 1, Combination = 2
Moment (+Z Area) = 195.075 Ft-K

```
        (-X Area)  =      195.075  Ft-K
Steel Required    =        3.568  In^2
Dist. to Centroid =        3.500  In

Typical Spacings
   33       #3 Bars at    3.563  In. Centers
   18       #4 Bars at    6.706  In. Centers
   12       #5 Bars at   10.364  In. Centers
    9       #6 Bars at   14.250  In. Centers
    8       #7 Bars at   16.286  In. Centers
```

```
        (-Z Area)  =      195.075  Ft-K
Steel Required    =        3.899  In^2
Dist. to Centroid =        4.500  In

Typical Spacings
   36       #3 Bars at    3.257  In. Centers
   20       #4 Bars at    6.000  In. Centers
   13       #5 Bars at    9.500  In. Centers
    9       #6 Bars at   14.250  In. Centers
    8       #7 Bars at   16.286  In. Centers
```

QUANTITIES : 241.382 Lbs of Steel and 133.333 Ft^3 of Concrete.

CENTER SPREAD FOOTING UPLIFT CALCS!

RESISTANCE

* ASSUME CONCRETE PIER + FOOTER IS THE ONLY UPLIFT RESISTANCE AVAILABLE!
* FOOTER WEIGHT = (10')(10')(1.33')(150 pcf) = 20,000 lbs
* PIER WEIGHT = (1.5')(1.5')(2')(150 pcf) = 675 lbs
* TOTAL RESISTNG FORCE = 20,675 LBS

LOADING

* LOAD TRIB. AREA = (60')(60') = 3,600 LBS
* DL = 8 PSF (ASSUMED ACTUAL LOAD)
* WL = -11.4 PSF (WIND PARALLEL TO RIDGE)
* LOAD COMBINATION = W − D
  [DL IS NOT FACTORED BECAUSE OF USE OF SAFETY FACTORS]
* NET UPLIFT LOAD = 3,600 LBS (11.4 − 8) = 12,240 LBS

FOS

FACTOR OF SAFETY = $\frac{20,675}{12,240}$ = 1.69 > 1.5 $\boxed{\text{OK}}$

$\boxed{\text{FOUNDATION IS SATISFACTORY FOR UPLIFT}}$

Concrete Footing Design

Job: **Bivouac, Gable End, Roof Support Footing**
Description: Spread Footing Under Steel Column

Designed By:
Checked By:
Program: Spread Footing Design v3.2 Code: ACI 2014

SOIL DATA				CONCRETE DATA				COLUMN DATA			
Max. Vert Press.	=	3.000	K /Ft ^2	F'c	=	3.000	K /In ^2	F'c	=	4.000	K /In ^2
Max. Flexural Press.	=	3.500	K /Ft ^2	Density	=	150.000	Lb/Ft ^3	X Dim.	=	18.000	In
Density	=	100.000	Lb/Ft ^3	Fy	=	60.000	K /In ^2	Z Dim.	=	18.000	In
Phi Angle	=	30.000	Deg					X Offset	=	0.000	Ft
Coeff. of Friction	=	0.330						Z Offset	=	0.000	Ft
Cohesion	=	0.000	Lb/Ft ^2	**SURCHARGE DATA**							
Ftg. Depth	=	2.000	Ft	+X,+Z Quadrant	=	0.000	K /Ft ^2				
FS Uplift	=	1.000		+X,-Z Quadrant	=	0.000	K /Ft ^2	**BASE PLATE DATA**			
FS Overturning	=	1.500		-X,-Z Quadrant	=	0.000	K /Ft ^2	X Dim.	=	18.000	In
FS Sliding	=	1.500		-X,+Z Quadrant	=	0.000	K /Ft ^2	Z Dim.	=	18.000	In

C O L U M N L O A D D E S C R I P T I O N S

COLUMN LOAD	DESCRIPTION
1	Downward

L O A D C O M B I N A T I O N S

LOAD COMBINATION	DESCRIPTION
1	1.4D
2	1.2D + 1.6L + 0.5R
3	1.2D + L + 1.6R
4	1.2D + 0.8W + 1.6R
5	1.2D + L + 1.6W + 0.5R
6	1.2D + L + 1.4E + 0.2R
7	0.9D + 1.6W
8	0.9D + 1.4E
9	1.2D - 0.8W + 1.6R
10	1.2D + L - 1.6W + 0.5R
11	1.2D + L - 1.4E + 0.2R
12	0.9D - 1.6W
13	0.9D - 1.4E

U N F A C T O R E D L O A D S I N P U T

COLUMN LOAD No. 1		DEAD LOAD		LIVE LOAD		WIND LOAD		EARTHQUAKE LOAD		ROOF LOAD	
Vertical	=	-18.000	K	-54.000	K	0.000	K	0.000	K	0.000	K
Moment X	=	0.000	Ft-K	0.000	Ft-K	0.000	Ft-K	0.000	Ft-K	0.000	Ft-K
Moment Z	=	0.000	Ft-K	0.000	Ft-K	0.000	Ft-K	0.000	Ft-K	0.000	Ft-K
Horizontal X	=	0.000	K								
Z	=	0.000	K								

F O O T I N G O U T P U T

FOOTING DESIGN				SHEAR STRESSES (ONE WAY)				SHEAR STRESSES (TWO WAY)			
X Dimension	=	7.250	Ft	+X Area	=	0.025	K /In ^2	+X Area	=	0.066	K /In ^2
Z Dimension	=	7.250	Ft	-X Area	=	0.025	K /In ^2	-X Area	=	0.066	K /In ^2
Thickness	=	16.000	In	+Z Area	=	0.029	K /In ^2	+Z Area	=	0.066	K /In ^2
Max. Press.	=	1.436	K /Ft ^2	-Z Area	=	0.029	K /In ^2	-Z Area	=	0.066	K /In ^2
				Allow.	=	0.082	K /In ^2	Allow.	=	0.164	K /In ^2

X Dimension = User Defined Minimum
Z Dimension = User Defined Minimum
Thickness = User Defined Minimum
Max. Pressure Governing Column = 1, Combination = 2
Design Controlled by Minimum Values

BOTTOM STEEL DESIGN (Parallel to X Axis)
Governing Column = Temp/Shrink Minimum
Moment (+X Area) = 61.565 Ft-K

BOTTOM STEEL DESIGN (Parallel to Z Axis)
Governing Column = Temp/Shrink Minimum
Moment (+Z Area) = 61.565 Ft-K

```
        (-X Area)  =       61.565  Ft-K
Steel Required    =        2.506  In^2   (Min)
Dist. to Centroid =        3.500  In

Typical Spacings
   23       #3 Bars at    3.682  In. Centers
   13       #4 Bars at    6.750  In. Centers
    9       #5 Bars at   10.125  In. Centers
    6       #6 Bars at   16.200  In. Centers
```

```
        (-Z Area)  =       61.565  Ft-K
Steel Required    =        2.506  In^2   (Min)
Dist. to Centroid =        4.500  In

Typical Spacings
   23       #3 Bars at    3.682  In. Centers
   13       #4 Bars at    6.750  In. Centers
    9       #5 Bars at   10.125  In. Centers
    6       #6 Bars at   16.200  In. Centers
```

QUANTITIES : 115.101 Lbs of Steel and 70.083 Ft^3 of Concrete.

ASCE 7 LOAD CALCULATIONS

PROJECT: ME011C-19 Gilt Barn

Length parallel to Ridge, ft	B	338
Length Normal to Ridge, ft	L	71
Wall Height, ft	z	6

VELOCITY PRESSURE, q_h

Design Method:	Envelope Procedure		Nominal height of Atmospheric Boundary	Z_g	900
Code Standard:	ASCE 7-10		3-s Gust Speed Power Law Exponent	α	9.5
Ultimate Wind Speed, mph	V	105	Velocity Pressure Exp. Coefficient	K_z	0.85
Building Midheight, ft	h	10.438	Wind Directionality Factor	K_d	0.85
Risk Category		I	Topographic Factor	K_{zt}	1
Exposure Category		C			
Velocity Pressure, psf	q_h	**20.4**			

MWFRS - LOW RISE BUILDINGS - ENVELOPE PROCEDURE - LOAD CASE A - (PERPENDICULAR TO RIDGE)

Velocity Pressure, q_h	**20.4**	(see Velocity Pressure Calculations)	
Windward Roof Pitch (x/12)	3	14.04	(deg)
Leeward Roof Pitch (x/12)	3	14.04	(deg)
Width of Pressure Coefficiant Zone, a	3	ft	
Enclosure Classification	Enclosed Building		

Building Surface (ASCE 7-10 Figure 28.4-1)

	Windward		Leeward		Windward (Edge)		Leeward (Edge)	
	Wall	Roof	Roof	Wall	Wall	Roof	Roof	Wall
θ	1	2	3	4	1E	2E	3E	4E
0-5	0.4	-0.69	-0.37	-0.29	0.61	-1.07	-0.53	-0.43
20	0.53	-0.69	-0.48	-0.43	0.80	-1.07	-0.69	-0.64
30-45	0.56	0.21	-0.43	-0.37	0.69	0.27	-0.53	-0.48
90	0.56	0.56	-0.37	-0.37	0.69	0.69	-0.48	-0.48
GC_{pf}	0.48	-0.69	-0.44	-0.37	0.72	-1.07	-0.63	-0.56
GC_{pi}	**DESIGN WIND PRESSURES**							
-0.18	**13.4**	**-10.4**	**-5.2**	**-4.0**	**18.4**	**-18.1**	**-9.1**	**-7.7**
0.18	**6.1**	**-17.7**	**-12.6**	**-11.3**	**11.1**	**-25.5**	**-16.4**	**-15.0**
0	**9.7**	**-14.1**	**-8.9**	**-7.6**	**14.8**	**-21.8**	**-12.8**	**-11.3**

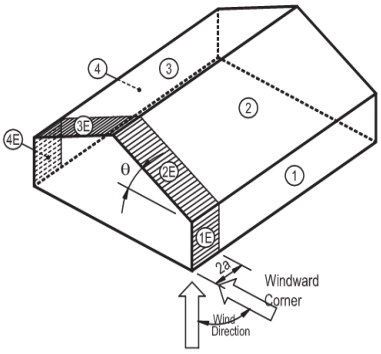

ASCE 7

MWFRS - LOW RISE BUILDINGS - ENVELOPE PROCEDURE - LOAD CASE B - (PARALLEL TO RIDGE)

Velocity Pressure, q_h	20.4	(see Velocity Pressure Calculations)
Enclosure Classification	Enclosed Building	

Building Surface (ASCE 7-10 Figure 28.4-1)

	Side 1		Side 2		Wind.	Leewrd.
	Wall	Roof	Roof	Wall	Wall	Wall
	1	2	3	4	5	6
GC_{pf}	-0.45	-0.69	-0.37	-0.45	0.40	-0.29
GC_{pi}	**DESIGN WIND PRESSURES**					
-0.18	**-5.5**	**-10.4**	**-3.9**	**-5.5**	**11.8**	**-2.2**
0.18	**-12.8**	**-17.7**	**-11.2**	**-12.8**	**4.5**	**-9.6**
0	**-9.2**	**-14.1**	**-7.5**	**-9.2**	**8.1**	**-5.9**

	1E	2E	3E	4E	5E	6E
GC_{pf}	-0.48	-1.07	-0.53	-0.48	0.61	-0.43
GC_{pi}	**DESIGN WIND PRESSURES**					
-0.18	**-6.1**	**-18.1**	**-7.1**	**-6.1**	**16.1**	**-5.1**
0.18	**-13.4**	**-25.5**	**-14.5**	**-13.4**	**8.8**	**-12.4**
0	**-9.8**	**-21.8**	**-10.8**	**-9.8**	**12.4**	**-8.8**

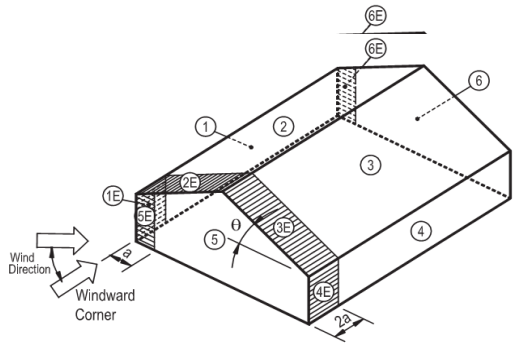

ASCE 7

C&C - LOW-RISE ENCLOSED & PART. ENCLOSED BUILDINGS - CHAPTER 30

Velocity Pressure, q_h	**20.4**	(see Velocity Pressure Calculations)	
Roof Pitch (rise per 12 units of run)	3	14.04	(deg)
Effective Roof Wind Area	8	ft^2	
Effective Wall Wind Area	16	ft^2	
Width of Pressure Coefficiant Zone, a	3	ft	
Enclosure Classification	Enclosed Building		

	Positive		Negative	
θ \ zone	4	5	4	5
0-10	0.873	0.873	-0.954	-1.206
>10	1.0	1.0	-1.06	-1.34
GC_p	1.0	1.0	-1.1	-1.3
GC_{pi}	**Design Wind Pressure**			
-0.18	23.4	23.4	-17.9	-23.6
0.18	16.1	16.1	-25.3	-31.0
0	19.8	19.8	-21.6	-27.3

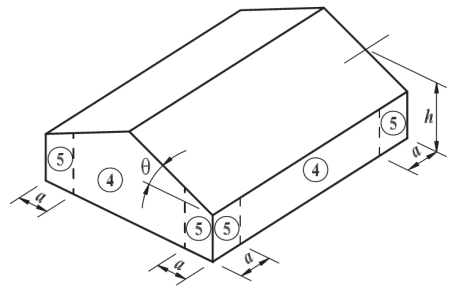

ASCE 7-10 Figure 30.4-1

	Positive	Negative		
θ \ zone	1,2&3	1	2	3
≤ 7	0.30	-1.0	-1.8	-2.8
7<θ≤27	0.50	-0.9	-1.7	-2.6
27<θ≤45	0.90	-1.00	-1.20	-1.20
GC_p	0.5	-0.9	-1.7	-2.6
GC_{pi}	**Design Wind Pressure**			
-0.18	13.8	-14.7	-30.95	-49.3
0.18	6.5	-22.0	-38.3	-56.6
0	10.2	-18.3	-34.6	-52.9

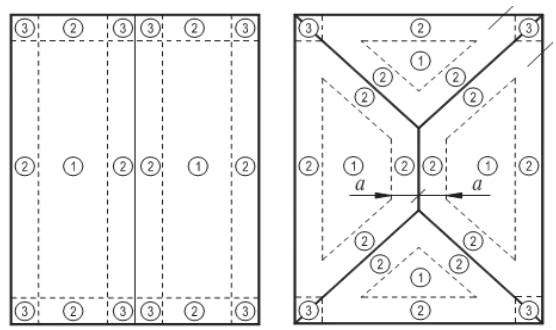

ASCE 7-10 Figure 30.4-2B

ROOF DEAD LOAD

Top Chord of Truss	5.0	psf
Bottom Chord of Truss	5.0	psf
Total Roof Dead Load	**10.0**	**psf**

MINIMUM ROOF LIVE LOAD

Top Chord of Truss	20.0	psf
Bottom Chord of Truss	0.0	psf
Total Roof Live Load	**20.0**	**psf**

ROOF SNOW LOAD CALCULATIONS (GABLE & HIP ROOFS)

SLOPED ROOF SNOW LOAD

Ground Snow Load, p_g	30	psf		Exposure of Roof	Partially Exposed
Roof Pitch	3	14.04	deg	Roof Obstructions:	All Other Roofs
Distance from Ridge to Eave, W	36.5	ft		Terrain Category	C
Risk Category	I			Exposure Factor, C_e	1.0
Flat Roof Snow Load, p_f	20.2	psf		Thermal Factor, C_t	1.2
Balanced, Sloped Roof Snow Load, p_s	**20.2**	**psf**		Sloped Roof Factor, C_s	1
USE	**30.0**	**psf**		Snow Importance Factor	0.8

UNBALANCED SNOW LOAD

				Roof slope run for a rise of 1, S	4.0
Unbalanced Windward Snow Load	**6.048**	**psf**		γ, pcf	17.9
Unbalanced Leeward Snow Load	**38.8**	**psf 11.1 ft from ridge, then 20.16 psf**		h_d, ft	2.08

SEISMIC LOAD CALCULATIONS - EQUIVALENT LATERAL FORCE PROCEDURE

Spectral Response Acceleration, S_S	0.12	Site Class	D
Spectral Response Acceleration, S_1	0.06	Response Modification Factor, R	7
Height to Highest Level of SFRS (ft), h_n	10.438	Deflection Amplification Factor, C_d	4.5
Structure Type	*All other structural systems*	Redundancy Factor, *ρ (12.3.4)*	1.3
Risk Category	I	Weight of structure (lbs), W	239980
Importance Factor, I_e	1	Effective Weight of Snow (lbs)	143988
Seismic Design Category based on S_{DS}	A	Effective Seismic Weight (lbs)	383968
Seismic Design Category based on S_{D1}	B		
Seismic Design Category based on S_1	N/A		

Site Coefficient, F_a and F_v

	S_s						S_1				
	0.25	0.5	0.75	1	1.25		0.1	0.2	0.3	0.4	0.5
A	0.8	0.8	0.8	0.8	0.8	A	0.8	0.8	0.8	0.8	0.8
B	1	1	1	1	1	B	1	1	1	1	1
C	1.2	1.2	1.1	1	1	C	1.7	1.6	1.5	1.4	1.3
D	1.6	1.4	1.2	1.1	1	D	2.4	2	1.8	1.6	1.5
E	2.5	1.7	1.2	0.9	0.9	E	3.5	3.2	2.8	2.4	2.4
F_a	1.6	0	0	0	0	F_v	2.4	0	0	0	0

S_{ms}	0.19	S_{DS}	0.13	C_t	0.02	T_a	0.1161
S_{m1}	0.14	S_{D1}	0.10	x	0.75	C_s	0.02

Seismic Base Shear, V	**7021**	**lbs**	(whole building)
Horizontal Seismic Load Effect, E_h	**9127**	**lbs**	(whole building)
Vertical Seismic Load Effect, E_v	**6143**	**lbs**	(whole building)

Gilt Pit, 6' Sidewalls

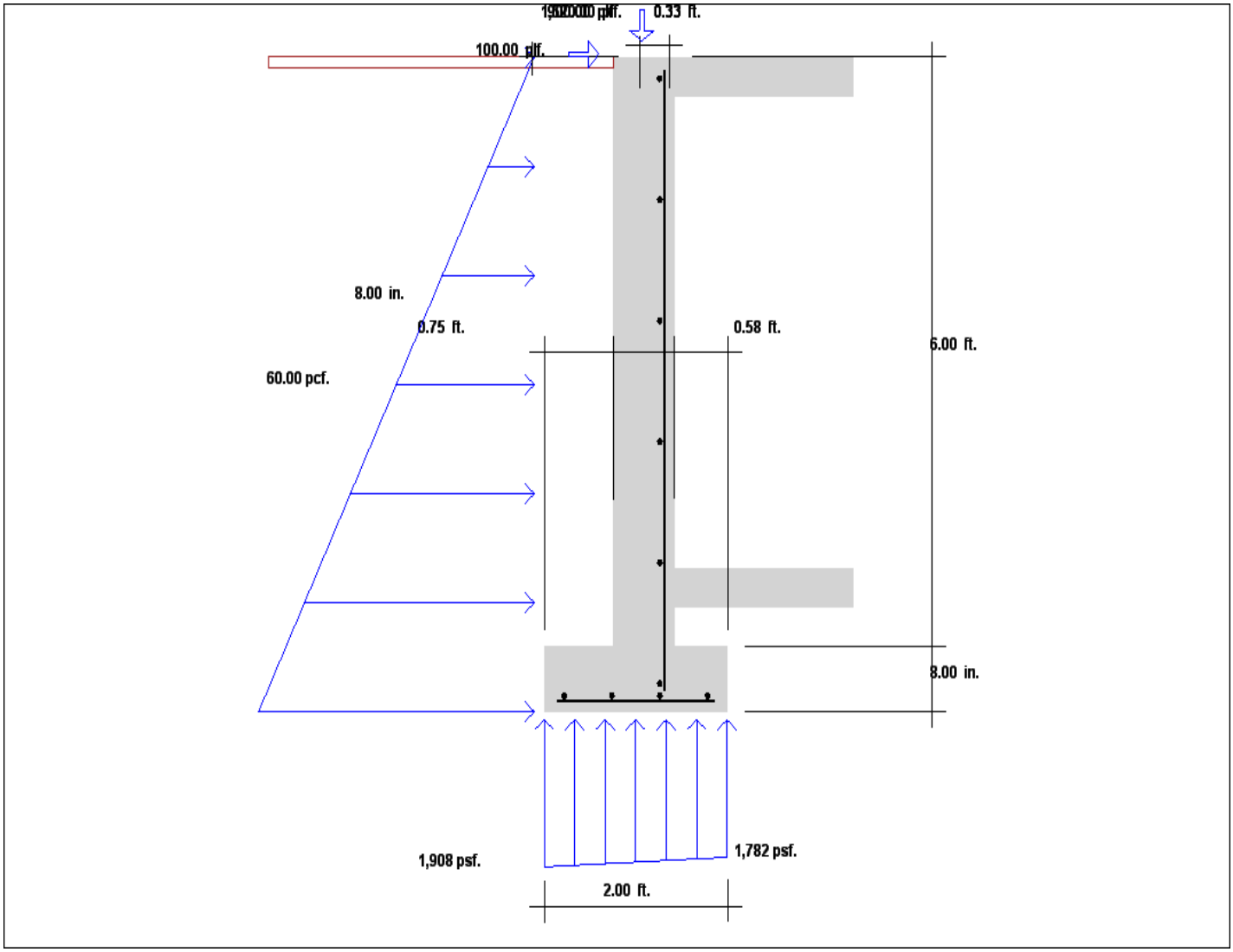

QuickWall 9.0 - RETAINING WALL ANALYSIS AND DESIGN

Job ID : Bivouac Farm
Job Description : Gilt 6' Sidewall Designed By :

FOOTING DESIGN METHOD: Ultimate Strength ACI 318-14
STEM DESIGN METHOD : Ultimate Strength ACI 318-14 (Concrete)
WALL TYPE : Basement Wall, restricted against sliding

RETAINING WALL DIMENSIONS:

Wall Stem Height		=	6.00 ft.		
Stem Thickness @ Top		=	8.00 in.		
Stem Thickness @ Bottom		=	8.00 in.		
Footing Thickness		=	8.00 in.		
Heel Width	Min.	=	0.67 ft.	Design Heel Width =	0.75 ft.
	Max.	=	10.00 ft.		
Toe Width	Min.	=	0.58 ft.	Design Toe Width =	0.58 ft.
	Max.	=	10.00 ft.		
Footing Key Depth		=	0.00 ft.	Design Key Depth =	0.00 ft.
Footing Key Width		=	0.00 ft.	Design Key Width =	0.00 ft.
BackFill Slope (Vert/Horiz)		=	0.00 :12		

RETAINING WALL LOADS:

Horizontal Equivalent Fluid Pressure	=	60.00 pcf.	(Load Case = Soil)
Backfill Height	=	6.00 ft.	
Equivalent Fluid Pressure Angle	=	N/A deg.	
Vertical Surcharge on Backfill	=	0 psf.	(Load Case = Live)
Horizontal Surcharge	=	0 psf.	(Load Case = Wind)
Vertical Surcharge on Toe	=	0 psf.	(Load Case = Soil)
Wind Load on Fence	=	0 psf.	(Load Case = Wind)
Fence Height	=	0.00 ft.	

Line No.	Ld. Type (H or V)	Magnitude (plf)	Dist. (x) (ft.)	Load Case
1	H	100.00	0.00	Wind
2	V	1,520.00	0.33	Roof
3	V	900.00	0.33	Live
4				
5				
6				
7				
8				
9				
10				

Notes: 1. "H" = Horizontal loads. "V" = Vertical loads.
2. Vertical loads are positive down.

```
ULTIMATE STRENGTH LOAD COMBINATIONS (Concrete Design):
-------------------------------------

1.4D + 1.4H
1.2D + 1.6L + 1.6H + 0.5R
1.2D + 1.6R + 1.6H + 1.0L
1.2D + 1.6R + 1.6H + 0.5W
1.2D + 1.0W + 1.0L + 0.5R
1.2D + 1.0E + 1.0L + 1.6H + 0.2R
0.9D + 1.0W + 1.6H
0.9D + 1.0E + 1.6H

WORKING STRESS LOAD COMBINATIONS (Stability Checks and Masonry Design):
-------------------------------------

D + L + R + H
D + L + 0.6W + H
D + L + 0.6W + 0.5R + H
D + L + R + 0.3W + H
D + L + R + E/1.4 + H
D + E/1.4 + H
```

```
RETAINING WALL RESISTING FORCES:
------------------------------------
Allowable Soil Pressure         =  2,000 psf.
Passive Equivalent Fluid Press. =    N/A
Passive Soil Height             =    N/A
Coefficient of Friction         =    N/A
Cohesion                        =    N/A

Use Vertical Surcharge as Resisting Wt.? =    N/A

Overturning Safety Factor       =    N/A
Sliding Safety Factor           =    N/A
Limit Reaction to Mid 1/3?      =    N/A


MATERIAL DATA:
------------------------------------
Concrete Strength, f'c      =   4.00 ksi.
Steel Yield Strength, Fy    =  60.00 ksi.

Concrete Unit Weight        = 145.00 pcf.
Soil Unit Weight            = 110.00 pcf.
Fence Weight                =  10.00 psf.


REINFORCING STEEL DATA:
------------------------------------
Concrete cover to center of steel:
          Wall Outside Face =   4.25 in.
 Footing Heel (Bottom Face) =   3.00 in.
  Footing Toe (Bottom Face) =   3.00 in.

Minimum Ratios for Shrinkage and Temperature Reinf:
       Vertical Stem Reinf. = 0.0012
     Horizontal Stem Reinf. = 0.0020
      Footing Reinforcement = 0.0012
```

```
*************************************************
       S U M M A R Y   O F   R E S U L T S
*************************************************
```

DIMENSIONS:

Stem Height	= 6.00 ft.	Heel Length	= 0.75 ft.
Stem Thick. @ Top	= 8.00 in.	Toe Length	= 0.58 ft.
Stem Thick. @ Base	= 8.00 in.	Total Ftg. Width, B	= 2.00 ft.
Footing Thickness	= 8.00 in.	Key Depth	= 0.00 ft.
		Key Width	= 0.00 ft.

ANALYSIS RESULTS:

Max Brg Press. @ Toe	= 1,782 psf.	Sliding Force	= 0 Lb
@ Heel	= 1,908 psf.	Resisting Force	= N/A
Allowable Brg. Press.	= 2,000 psf.	F.O.S.	= N/A
Resultant Loc From C.L.	= -0.01 ft.	Overturn. Moment	= 0 ft-lb
Kern Point Loc., B/6	= 0.33 ft.	Resisting Moment	= 3,732 ft-lb
Limit Resultant To Mid 1/3?	= N/A	F.O.S.	= N/A

DESIGN RESULTS: Design Method, Stem: USD, ACI 318-14 (Concrete)
Ftg.: Ultimate Strength ACI 318-14

	d (in.)	Mu (ft-k)	Vu (kip)	Phi Vn (kip)	As Flex. (in^2)	As Min. (in^2)	As T+S (in^2)
Stem :	3.75	0.14	1.17	4.27	0.032	0.011	0.147
Toe :	5.00	0.39	0.38	5.69	0.017	0.023	0.115
Heel :	5.00	-0.44	-1.15	5.69	0.019	0.026	0.115
Key :	0.00	0.00	0.00	0.00	0.000	0.000	0.000

Notes: 1. Stem moments are positive if they cause tension on the soil face. Negative if they cause tension on the outside face. Stem shear is positive to the left as measured on a section cut below the top of wall.

2. Heel moments are positive if they cause tension in the top of the footing. Heel shear is positive up as measured on a section cut to the right of the end of the heel.

3. Toe moments are positive if they cause tension in the bottom of the footing. Toe shear is positive up as measured on a section cut to the left of the end of the toe.

```
*************************************************
 S T A B I L I T Y   A N A L Y S I S   R E P O R T
*************************************************

-------------------------------------------------------------------------------
Stability Analysis: Governing Combination = D + L + R + H

----------RESISTING FORCES---------     ---------OVERTURNING FORCES---------
Element    Weight  x  Arm  = Moment     Element      Force  x  Arm  = Moment
Soil          497               807     R at Top      -346    6.67    -2,305
Ftg.          193    1.00       193     R at Bot.     -988    0.67      -658
Stem          580    0.91       530     Horiz. EFP   1,333    2.22     2,963
Vert Sur                               Vert Sur
Vert EFP                               Horiz Sur
Toe Sur.                               Wind
Fence Wt.                              Horiz line
V. line     2,420             2,202    Vert. line
          --------          --------                --------         --------
Sum WT =    3,691    MR =     3,732    Sum F =          0   MOT =         0

-------------------------------------------------------------------------------

Friction Force        =    N/A        F.O.S. Sliding    =   RF / F =    N/A
Passive Pressure      =    N/A        F.O.S. Overturn.  = MR / MOT =    N/A
Cohesion              =    N/A
                         --------          Coef. Vert. Surcharge or Line Load
Resist. Force, Sum RF =      N/A           to Horiz. = EFP / Soil Dens. =  0.545

-------------------------------------------------------------------------------

Resultant Loc From Toe,      X = (MR - MOT) / Sum WT     =    1.01 ft.
Eccentricity From Ftg. C.L., e = (B / 2) - X             =   -0.01 ft.

Soil Pressure @ Toe            = (WT / B) * (1 + 6e/B)   =   1,782 psf.
Soil Pressure @ Heel           = (WT / B) * (1 - 6e/B)   =   1,908 psf.
```

```
*************************************************
   D E T A I L E D   D E S I G N   R E P O R T
*************************************************
```

STEM DESIGN: Steel Design Comb = 0.9D + 1.0W + 1.6H
Shr Strength @ Base, Phi Vn = 4.27 kip

Dist From Top (ft)	d (in.)	Mu (ft-k)	Vu (kip)	As Flex. (in^2)	As Min. (in^2)	As T+S (in^2)	As Reqd (in^2)	Comb
0.60	3.75	-0.33	-0.54	0.020	0.026	0.115	0.115	2
1.20	3.75	-0.64	-0.48	0.038	0.051	0.115	0.115	2
1.80	3.75	-0.90	-0.40	0.054	0.072	0.115	0.115	4
2.40	3.75	-1.11	-0.28	0.066	0.089	0.115	0.115	2
3.00	3.75	-1.23	-0.12	0.074	0.098	0.115	0.115	4
3.60	3.75	-1.24	0.07	0.075	0.100	0.115	0.115	2
4.20	3.75	-1.14	0.29	0.068	0.091	0.115	0.115	2
4.80	3.75	-0.89	0.55	0.053	0.071	0.115	0.115	2
5.40	3.75	-0.47	0.85	0.028	0.037	0.115	0.115	4
6.00	3.75	0.14	1.17	0.032	0.011	0.147	0.147	7

Vertical Stem Reinforcement:
Shear-Friction Steel Added at Stem Base (ACI 14 22.9), Avf = 0.032 in^2
Available Length for Hook Embedment into Footing = 5.50 in.
Available Length for Straight Embedment into Stem = 70.00 in.

	Development Length Straight (in.)	Hook (in.)	Percent Develop.	Spac. (in.)	50% Cut Off (in.)
#4				16.31	
#5				18.00	
#6				18.00	
#7				18.00	
#8				18.00	
#9				18.00	
#10				18.00	
#11				18.00	

Horizontal Stem Reinforcement:
Area of steel for Shrinkage and Temp. Reinforcement = 0.192 in^2

	-----Spacing, in.----- I.F. Only	EA. Face	------Total Bars------ I.F. Only	EA. Face
#4	12.50	18.00	7.00	5.00
#5	18.00	18.00	5.00	5.00
#6	18.00	18.00	5.00	5.00
#7	18.00	18.00	5.00	5.00
#8	18.00	18.00	5.00	5.00
#9	18.00	18.00	5.00	5.00
#10	18.00	18.00	5.00	5.00
#11	18.00	18.00	5.00	5.00

TOE DESIGN:

* Steel Design Comb. = 1.2D + 1.6R + 1.6H + 1.0L
* Thickness Design Comb. = 1.2D + 1.6R + 1.6H + 1.0L
* Available Length for Hook Embedment into Stem = 4.25 in.
* Available Length for Straight Embed. into Toe = 4.96 in.

d (in.)	Mu (ft-k)	Vu (kip)	Phi Vn (kip)	As Flex. (in^2)	As Min. (in^2)	As T+S (in^2)	As Req'd (in^2)
5.00	0.39	0.38	5.69	0.017	0.023	0.115	0.115

	Development Length Straight (in.)	Hook (in.)	Percent Develop.	Spac. (in.)
#4				18.00
#5				18.00
#6				18.00
#7				18.00
#8				18.00
#9				18.00
#10				18.00
#11				18.00

HEEL DESIGN:

* Steel Design Comb. = 1.2D + 1.6R + 1.6H + 1.0L
* Thickness Design Comb. = 1.2D + 1.6R + 1.6H + 1.0L
* Available Length for Straight Embedment into Toe = 12.96 in.
* Available Length for Straight Embedment into Heel = 7.04 in.

d (in.)	Mu (ft-k)	Vu (kip)	Phi Vn (kip)	As Flex. (in^2)	As Min. (in^2)	As T+S (in^2)	As Req'd (in^2)
5.00	-0.44	-1.15	5.69	0.019	0.026	0.115	0.115

	Development Length Straight (in.)	Hook (in.)	Percent Develop.	Spac. (in.)
#4				18.00
#5				18.00
#6				18.00
#7				18.00
#8				18.00
#9				18.00
#10				18.00
#11				18.00

LONGITUDINAL FOOTING REINFORCEMENT (TEMP & SHRINK ONLY):

	Spacing (in.)
#4	20.83
#5	32.29
#6	45.83
#7	62.50
#8	82.29
#9	104.17
#10	132.29
#11	162.50

Gilt Pit, 6' Divider Wall

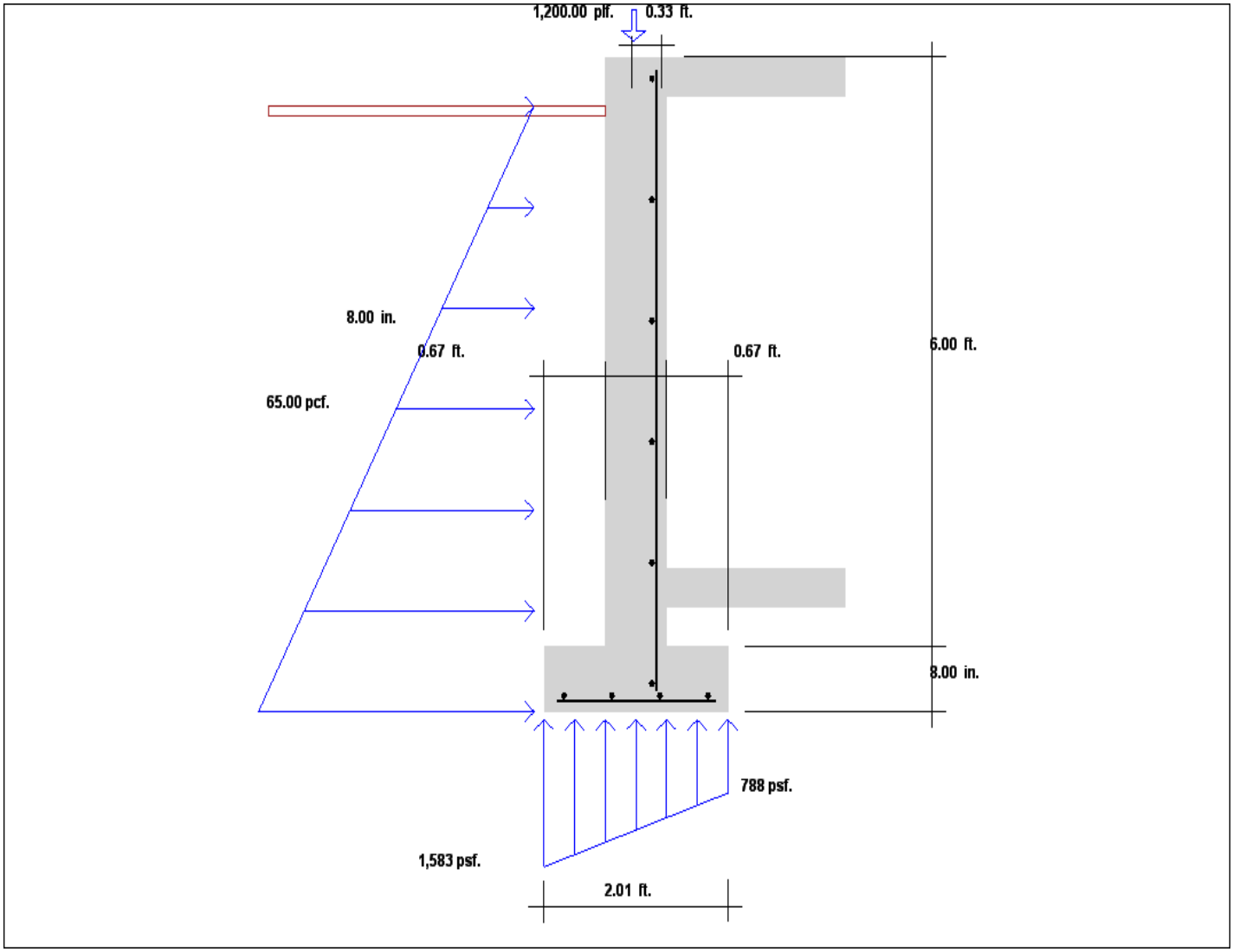

```
                 QuickWall 9.0 - RETAINING WALL ANALYSIS AND DESIGN
================================================================================
Job ID  : Bivouac Farm
Job Description : Gilt 6' Divider Wall                            Designed By :
================================================================================

FOOTING DESIGN METHOD:  Ultimate Strength ACI 318-14
STEM DESIGN METHOD   :  Ultimate Strength ACI 318-14 (Concrete)
WALL TYPE            :  Basement Wall, restricted against sliding

RETAINING WALL DIMENSIONS:
-------------------------------------
Wall Stem Height            =   6.00 ft.
Stem Thickness @ Top        =   8.00 in.
Stem Thickness @ Bottom     =   8.00 in.

Footing Thickness           =   8.00 in.
Heel Width . . . . . . Min. =   0.67 ft.     Design Heel Width =   0.67 ft.
                      Max. =  20.00 ft.
Toe Width  . . . . . . Min. =   0.67 ft.     Design Toe Width  =   0.67 ft.
                      Max. =  10.00 ft.
Footing Key Depth           =   0.00 ft.     Design Key Depth  =   0.00 ft.
Footing Key Width           =   0.00 ft.     Design Key Width  =   0.00 ft.
BackFill Slope (Vert/Horiz) =   0.00 :12

RETAINING WALL LOADS:
-------------------------------------
Horizontal Equivalent Fluid Pressure     =  65.00 pcf.  (Load Case = Live)
Backfill Height                          =   5.50 ft.
Equivalent Fluid Pressure Angle          =    N/A deg.
Vertical Surcharge on Backfill           =      0 psf.  (Load Case = Soil)
Horizontal Surcharge                     =      0 psf.  (Load Case = Soil)
Vertical Surcharge on Toe                =      0 psf.  (Load Case = Soil)
Wind Load on Fence                       =      0 psf.  (Load Case = Wind)
Fence Height                             =   0.00 ft.

Line Ld.   Type      Magnitude    Dist. (x)    Load Case
  No.    (H or V)      (plf)        (ft.)
  1         V       1,200.00         0.33         Live
  2
  3
  4
  5
  6
  7
  8
  9
  10

Notes:  1. "H" = Horizontal loads.  "V" = Vertical loads.
        2.  Vertical loads are positive down.
```

```
ULTIMATE STRENGTH LOAD COMBINATIONS (Concrete Design):
-------------------------------------

1.4D + 1.4H
1.2D + 1.6L + 1.6H + 0.5R
1.2D + 1.6R + 1.6H + 1.0L
1.2D + 1.6R + 1.6H + 0.5W
1.2D + 1.0W + 1.0L + 0.5R
1.2D + 1.0E + 1.0L + 1.6H + 0.2R
0.9D + 1.0W + 1.6H
0.9D + 1.0E + 1.6H

WORKING STRESS LOAD COMBINATIONS (Stability Checks and Masonry Design):
-------------------------------------

D + L + R + H
D + L + 0.6W + H
D + L + 0.6W + 0.5R + H
D + L + R + 0.3W + H
D + L + R + E/1.4 + H
D + E/1.4 + H
```

```
RETAINING WALL RESISTING FORCES:
------------------------------------
Allowable Soil Pressure         =  2,000 psf.
Passive Equivalent Fluid Press. =    N/A
Passive Soil Height             =    N/A
Coefficient of Friction         =    N/A
Cohesion                        =    N/A

Use Vertical Surcharge as Resisting Wt.? =    N/A

Overturning Safety Factor       =    N/A
Sliding Safety Factor           =    N/A
Limit Reaction to Mid 1/3?      =    N/A


MATERIAL DATA:
------------------------------------
Concrete Strength, f'c      =   4.00 ksi.
Steel Yield Strength, Fy    =  60.00 ksi.

Concrete Unit Weight        = 145.00 pcf.
Soil Unit Weight            = 110.00 pcf.
Fence Weight                =  10.00 psf.


REINFORCING STEEL DATA:
------------------------------------
Concrete cover to center of steel:
          Wall Outside Face =   4.00 in.
 Footing Heel (Bottom Face) =   3.00 in.
  Footing Toe (Bottom Face) =   3.00 in.

Minimum Ratios for Shrinkage and Temperature Reinf:
       Vertical Stem Reinf. = 0.0012
     Horizontal Stem Reinf. = 0.0020
      Footing Reinforcement = 0.0012
```

```
*************************************************
        S U M M A R Y   O F   R E S U L T S
*************************************************
```

DIMENSIONS:

Stem Height	= 6.00 ft.	Heel Length	= 0.67 ft.
Stem Thick. @ Top	= 8.00 in.	Toe Length	= 0.67 ft.
Stem Thick. @ Base	= 8.00 in.	Total Ftg. Width, B	= 2.01 ft.
Footing Thickness	= 8.00 in.	Key Depth	= 0.00 ft.
		Key Width	= 0.00 ft.

ANALYSIS RESULTS:

Max Brg Press. @ Toe	= 788 psf.	Sliding Force	= 0 Lb
@ Heel	= 1,583 psf.	Resisting Force	= N/A
Allowable Brg. Press.	= 2,000 psf.	F.O.S.	= N/A
Resultant Loc From C.L.	= -0.11 ft.	Overturn. Moment	= 0 ft-lb
Kern Point Loc., B/6	= 0.33 ft.	Resisting Moment	= 2,654 ft-lb
Limit Resultant To Mid 1/3?	= N/A	F.O.S.	= N/A

DESIGN RESULTS: Design Method, Stem: USD, ACI 318-14 (Concrete)
Ftg.: Ultimate Strength ACI 318-14

	d (in.)	Mu (ft-k)	Vu (kip)	Phi Vn (kip)	As Flex. (in^2)	As Min. (in^2)	As T+S (in^2)
Stem :	4.00	0.14	1.12	4.55	0.030	0.010	0.145
Toe :	5.00	0.26	0.29	5.69	0.012	0.016	0.115
Heel :	5.00	-0.27	-0.76	5.69	0.012	0.016	0.115
Key :	0.00	0.00	0.00	0.00	0.000	0.000	0.000

Notes: 1. Stem moments are positive if they cause tension on the soil face. Negative if they cause tension on the outside face. Stem shear is positive to the left as measured on a section cut below the top of wall.

2. Heel moments are positive if they cause tension in the top of the footing. Heel shear is positive up as measured on a section cut to the right of the end of the heel.

3. Toe moments are positive if they cause tension in the bottom of the footing. Toe shear is positive up as measured on a section cut to the left of the end of the toe.

```
*************************************************
 S T A B I L I T Y   A N A L Y S I S   R E P O R T
*************************************************

-------------------------------------------------------------------------------
Stability Analysis: Governing Combination = D + L + R + H

----------RESISTING FORCES---------     ---------OVERTURNING FORCES---------
Element    Weight  x  Arm  = Moment     Element      Force  x  Arm  = Moment
Soil          405               678     R at Top      -286    6.67    -1,907
Ftg.          194    1.00       195     R at Bot.     -950    0.67      -633
Stem          580    1.00       582     Horiz. EFP   1,236    2.06     2,540
Vert Sur                               Vert Sur
Vert EFP                               Horiz Sur
Toe Sur.                               Wind
Fence Wt.                              Horiz line
V. line     1,200             1,200    Vert. line
          --------          --------                --------         --------
Sum WT =    2,379    MR =     2,654    Sum F =          0   MOT =         0

-------------------------------------------------------------------------------

Friction Force        =    N/A        F.O.S. Sliding    =   RF / F =    N/A
Passive Pressure      =    N/A        F.O.S. Overturn.  = MR / MOT =    N/A
Cohesion              =    N/A
                         --------          Coef. Vert. Surcharge or Line Load
Resist. Force, Sum RF =      N/A           to Horiz. = EFP / Soil Dens. =  0.591

-------------------------------------------------------------------------------

Resultant Loc From Toe,      X = (MR - MOT) / Sum WT     =    1.12 ft.
Eccentricity From Ftg. C.L., e = (B / 2) - X             =   -0.11 ft.

Soil Pressure @ Toe            = (WT / B) * (1 + 6e/B)   =     788 psf.
Soil Pressure @ Heel           = (WT / B) * (1 - 6e/B)   =   1,583 psf.
```

```
*************************************************
   D E T A I L E D   D E S I G N   R E P O R T
*************************************************
```

STEM DESIGN: Steel Design Comb = 1.2D + 1.6L + 1.6H + 0.5R
Shr Strength @ Base, Phi Vn = 4.55 kip

Dist From Top (ft)	d (in.)	Mu (ft-k)	Vu (kip)	As Flex. (in^2)	As Min. (in^2)	As T+S (in^2)	As Reqd (in^2)	Comb
0.60	4.00	-0.27	-0.46	0.015	0.020	0.115	0.115	2
1.20	4.00	-0.54	-0.43	0.030	0.040	0.115	0.115	2
1.80	4.00	-0.79	-0.37	0.044	0.059	0.115	0.115	2
2.40	4.00	-0.98	-0.27	0.055	0.073	0.115	0.115	2
3.00	4.00	-1.10	-0.13	0.062	0.083	0.115	0.115	2
3.60	4.00	-1.13	0.04	0.064	0.085	0.115	0.115	2
4.20	4.00	-1.04	0.25	0.059	0.078	0.115	0.115	2
4.80	4.00	-0.82	0.50	0.046	0.061	0.115	0.115	2
5.40	4.00	-0.43	0.79	0.024	0.032	0.115	0.115	2
6.00	4.00	0.14	1.12	0.030	0.010	0.145	0.145	2

Vertical Stem Reinforcement:
Shear-Friction Steel Added at Stem Base (ACI 14 22.9), Avf = 0.030 in^2
Available Length for Hook Embedment into Footing = 5.50 in.
Available Length for Straight Embedment into Stem = 70.00 in.

	Development Length Straight (in.)	Hook (in.)	Percent Develop.	Spac. (in.)	50% Cut Off (in.)
#4				16.56	
#5				18.00	
#6				18.00	
#7				18.00	
#8				18.00	
#9				18.00	
#10				18.00	
#11				18.00	

Horizontal Stem Reinforcement:
Area of steel for Shrinkage and Temp. Reinforcement = 0.192 in^2

	-----Spacing, in.----- I.F. Only	EA. Face	------Total Bars------ I.F. Only	EA. Face
#4	12.50	18.00	7.00	5.00
#5	18.00	18.00	5.00	5.00
#6	18.00	18.00	5.00	5.00
#7	18.00	18.00	5.00	5.00
#8	18.00	18.00	5.00	5.00
#9	18.00	18.00	5.00	5.00
#10	18.00	18.00	5.00	5.00
#11	18.00	18.00	5.00	5.00

TOE DESIGN:

* Steel Design Comb. = 1.2D + 1.6L + 1.6H + 0.5R
* Thickness Design Comb. = 1.2D + 1.6L + 1.6H + 0.5R
* Available Length for Hook Embedment into Stem = 4.50 in.
* Available Length for Straight Embed. into Toe = 6.04 in.

d (in.)	Mu (ft-k)	Vu (kip)	Phi Vn (kip)	As Flex. (in^2)	As Min. (in^2)	As T+S (in^2)	As Req'd (in^2)
5.00	0.26	0.29	5.69	0.012	0.016	0.115	0.115

	Development Length Straight (in.)	Hook (in.)	Percent Develop.	Spac. (in.)
#4				18.00
#5				18.00
#6				18.00
#7				18.00
#8				18.00
#9				18.00
#10				18.00
#11				18.00

HEEL DESIGN:

* Steel Design Comb. = 1.2D + 1.6L + 1.6H + 0.5R
* Thickness Design Comb. = 1.2D + 1.6L + 1.6H + 0.5R
* Available Length for Straight Embedment into Toe = 14.04 in.
* Available Length for Straight Embedment into Heel = 6.04 in.

d (in.)	Mu (ft-k)	Vu (kip)	Phi Vn (kip)	As Flex. (in^2)	As Min. (in^2)	As T+S (in^2)	As Req'd (in^2)
5.00	-0.27	-0.76	5.69	0.012	0.016	0.115	0.115

	Development Length Straight (in.)	Hook (in.)	Percent Develop.	Spac. (in.)
#4				18.00
#5				18.00
#6				18.00
#7				18.00
#8				18.00
#9				18.00
#10				18.00
#11				18.00

LONGITUDINAL FOOTING REINFORCEMENT (TEMP & SHRINK ONLY):

	Spacing (in.)
#4	20.83
#5	32.29
#6	45.83
#7	62.50
#8	82.29
#9	104.17
#10	132.29
#11	162.50

Gilt Pit, 6' Gable Wall

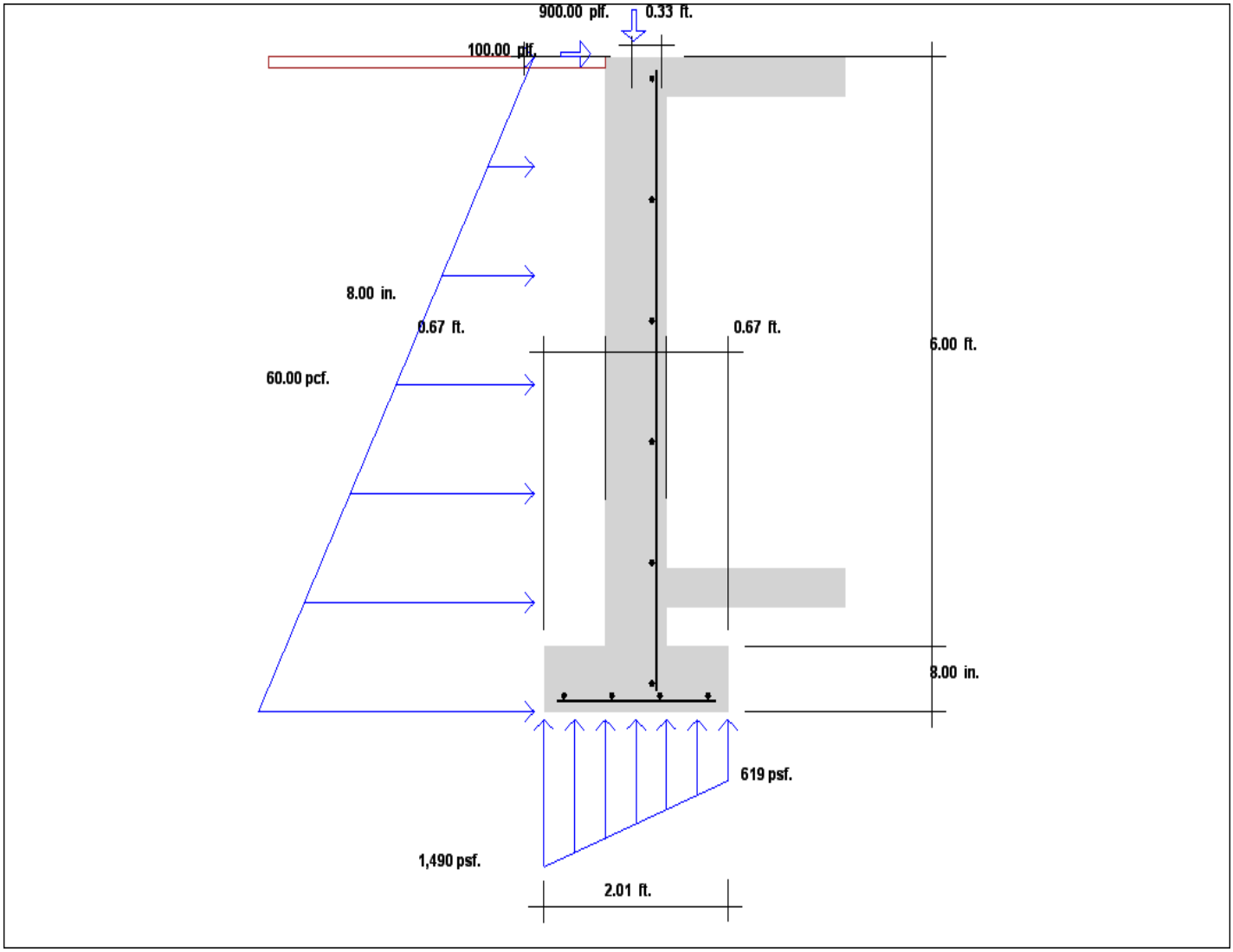

QuickWall 9.0 - RETAINING WALL ANALYSIS AND DESIGN

Job ID : Bivouac Farm
Job Description : Gilt 6' Gable Wall Designed By :

FOOTING DESIGN METHOD: Ultimate Strength ACI 318-14
STEM DESIGN METHOD : Ultimate Strength ACI 318-14 (Concrete)
WALL TYPE : Basement Wall, restricted against sliding

RETAINING WALL DIMENSIONS:

Wall Stem Height		=	6.00 ft.		
Stem Thickness @ Top		=	8.00 in.		
Stem Thickness @ Bottom		=	8.00 in.		
Footing Thickness		=	8.00 in.		
Heel Width	Min.	=	0.67 ft.	Design Heel Width =	0.67 ft.
	Max.	=	10.00 ft.		
Toe Width	Min.	=	0.67 ft.	Design Toe Width =	0.67 ft.
	Max.	=	10.00 ft.		
Footing Key Depth		=	0.00 ft.	Design Key Depth =	0.00 ft.
Footing Key Width		=	0.00 ft.	Design Key Width =	0.00 ft.
BackFill Slope (Vert/Horiz)		=	0.00 :12		

RETAINING WALL LOADS:

Horizontal Equivalent Fluid Pressure	=	60.00 pcf.	(Load Case = Soil)
Backfill Height	=	6.00 ft.	
Equivalent Fluid Pressure Angle	=	N/A deg.	
Vertical Surcharge on Backfill	=	0 psf.	(Load Case = Live)
Horizontal Surcharge	=	0 psf.	(Load Case = Wind)
Vertical Surcharge on Toe	=	0 psf.	(Load Case = Soil)
Wind Load on Fence	=	0 psf.	(Load Case = Wind)
Fence Height	=	0.00 ft.	

Line No.	Ld. Type (H or V)	Magnitude (plf)	Dist. (x) (ft.)	Load Case
1	H	100.00	0.00	Wind
2	V	900.00	0.33	Live
3				
4				
5				
6				
7				
8				
9				
10				

Notes: 1. "H" = Horizontal loads. "V" = Vertical loads.
2. Vertical loads are positive down.

```
ULTIMATE STRENGTH LOAD COMBINATIONS (Concrete Design):
-------------------------------------

1.4D + 1.4H
1.2D + 1.6L + 1.6H + 0.5R
1.2D + 1.6R + 1.6H + 1.0L
1.2D + 1.6R + 1.6H + 0.5W
1.2D + 1.0W + 1.0L + 0.5R
1.2D + 1.0E + 1.0L + 1.6H + 0.2R
0.9D + 1.0W + 1.6H
0.9D + 1.0E + 1.6H

WORKING STRESS LOAD COMBINATIONS (Stability Checks and Masonry Design):
-------------------------------------

D + L + R + H
D + L + 0.6W + H
D + L + 0.6W + 0.5R + H
D + L + R + 0.3W + H
D + L + R + E/1.4 + H
D + E/1.4 + H
```

```
RETAINING WALL RESISTING FORCES:
------------------------------------
Allowable Soil Pressure         =  2,000 psf.
Passive Equivalent Fluid Press. =    N/A
Passive Soil Height             =    N/A
Coefficient of Friction         =    N/A
Cohesion                        =    N/A

Use Vertical Surcharge as Resisting Wt.? =    N/A

Overturning Safety Factor       =    N/A
Sliding Safety Factor           =    N/A
Limit Reaction to Mid 1/3?      =    N/A


MATERIAL DATA:
------------------------------------
Concrete Strength, f'c      =   4.00 ksi.
Steel Yield Strength, Fy    =  60.00 ksi.

Concrete Unit Weight        = 145.00 pcf.
Soil Unit Weight            = 110.00 pcf.
Fence Weight                =  10.00 psf.


REINFORCING STEEL DATA:
------------------------------------
Concrete cover to center of steel:
          Wall Outside Face =   4.25 in.
 Footing Heel (Bottom Face) =   3.00 in.
  Footing Toe (Bottom Face) =   3.00 in.

Minimum Ratios for Shrinkage and Temperature Reinf:
       Vertical Stem Reinf. = 0.0012
     Horizontal Stem Reinf. = 0.0020
      Footing Reinforcement = 0.0012
```

```
*************************************************
        S U M M A R Y   O F   R E S U L T S
*************************************************
```

DIMENSIONS:

Stem Height	= 6.00 ft.	Heel Length	= 0.67 ft.
Stem Thick. @ Top	= 8.00 in.	Toe Length	= 0.67 ft.
Stem Thick. @ Base	= 8.00 in.	Total Ftg. Width, B	= 2.01 ft.
Footing Thickness	= 8.00 in.	Key Depth	= 0.00 ft.
		Key Width	= 0.00 ft.

ANALYSIS RESULTS:

Max Brg Press. @ Toe	= 619 psf.	Sliding Force	= 0 Lb
@ Heel	= 1,490 psf.	Resisting Force	= N/A
Allowable Brg. Press.	= 2,000 psf.	F.O.S.	= N/A
Resultant Loc From C.L.	= -0.14 ft.	Overturn. Moment	= 0 ft-lb
Kern Point Loc., B/6	= 0.33 ft.	Resisting Moment	= 2,416 ft-lb
Limit Resultant To Mid 1/3?	= N/A	F.O.S.	= N/A

DESIGN RESULTS: Design Method, Stem: USD, ACI 318-14 (Concrete)
Ftg.: Ultimate Strength ACI 318-14

	d (in.)	Mu (ft-k)	Vu (kip)	Phi Vn (kip)	As Flex. (in^2)	As Min. (in^2)	As T+S (in^2)
Stem :	3.75	0.14	1.17	4.27	0.032	0.011	0.147
Toe :	5.00	0.21	0.22	5.69	0.009	0.012	0.115
Heel :	5.00	-0.21	-0.59	5.69	0.009	0.013	0.115
Key :	0.00	0.00	0.00	0.00	0.000	0.000	0.000

Notes: 1. Stem moments are positive if they cause tension on the soil face. Negative if they cause tension on the outside face. Stem shear is positive to the left as measured on a section cut below the top of wall.

2. Heel moments are positive if they cause tension in the top of the footing. Heel shear is positive up as measured on a section cut to the right of the end of the heel.

3. Toe moments are positive if they cause tension in the bottom of the footing. Toe shear is positive up as measured on a section cut to the left of the end of the toe.

```
*************************************************
 S T A B I L I T Y   A N A L Y S I S   R E P O R T
*************************************************

-------------------------------------------------------------------------------
Stability Analysis: Governing Combination = D + L + R + H

----------RESISTING FORCES---------     ---------OVERTURNING FORCES---------
Element    Weight  x  Arm  = Moment     Element      Force  x  Arm  = Moment
Soil          442               739     R at Top      -346    6.67    -2,305
Ftg.          194    1.00       195     R at Bot.     -988    0.67      -658
Stem          580    1.00       582     Horiz. EFP   1,333    2.22     2,963
Vert Sur                               Vert Sur
Vert EFP                               Horiz Sur
Toe Sur.                               Wind
Fence Wt.                              Horiz line
V. line       900               900     Vert. line
          --------          --------                --------         --------
Sum WT =    2,116    MR =     2,416     Sum F =          0   MOT =         0

-------------------------------------------------------------------------------

Friction Force        =    N/A        F.O.S. Sliding    =   RF / F =    N/A
Passive Pressure      =    N/A        F.O.S. Overturn.  = MR / MOT =    N/A
Cohesion              =    N/A
                         --------          Coef. Vert. Surcharge or Line Load
Resist. Force, Sum RF =      N/A           to Horiz. = EFP / Soil Dens. =  0.545

-------------------------------------------------------------------------------

Resultant Loc From Toe,      X = (MR - MOT) / Sum WT     =    1.14 ft.
Eccentricity From Ftg. C.L., e = (B / 2) - X             =   -0.14 ft.

Soil Pressure @ Toe            = (WT / B) * (1 + 6e/B)   =     619 psf.
Soil Pressure @ Heel           = (WT / B) * (1 - 6e/B)   =   1,490 psf.
```

```
*************************************************
   D E T A I L E D   D E S I G N   R E P O R T
*************************************************
```

STEM DESIGN: Steel Design Comb = 0.9D + 1.0W + 1.6H
Shr Strength @ Base, Phi Vn = 4.27 kip

Dist From Top (ft)	d (in.)	Mu (ft-k)	Vu (kip)	As Flex. (in^2)	As Min. (in^2)	As T+S (in^2)	As Reqd (in^2)	Comb
0.60	3.75	-0.33	-0.54	0.020	0.026	0.115	0.115	2
1.20	3.75	-0.64	-0.48	0.038	0.051	0.115	0.115	2
1.80	3.75	-0.90	-0.40	0.054	0.072	0.115	0.115	4
2.40	3.75	-1.11	-0.28	0.066	0.089	0.115	0.115	2
3.00	3.75	-1.23	-0.12	0.074	0.098	0.115	0.115	4
3.60	3.75	-1.24	0.07	0.075	0.100	0.115	0.115	2
4.20	3.75	-1.14	0.29	0.068	0.091	0.115	0.115	2
4.80	3.75	-0.89	0.55	0.053	0.071	0.115	0.115	2
5.40	3.75	-0.47	0.85	0.028	0.037	0.115	0.115	4
6.00	3.75	0.14	1.17	0.032	0.011	0.147	0.147	7

Vertical Stem Reinforcement:
Shear-Friction Steel Added at Stem Base (ACI 14 22.9), Avf = 0.032 in^2
Available Length for Hook Embedment into Footing = 5.50 in.
Available Length for Straight Embedment into Stem = 70.00 in.

	Development Length Straight (in.)	Hook (in.)	Percent Develop.	Spac. (in.)	50% Cut Off (in.)
#4				16.31	
#5				18.00	
#6				18.00	
#7				18.00	
#8				18.00	
#9				18.00	
#10				18.00	
#11				18.00	

Horizontal Stem Reinforcement:
Area of steel for Shrinkage and Temp. Reinforcement = 0.192 in^2

	-----Spacing, in.----- I.F. Only	EA. Face	------Total Bars------ I.F. Only	EA. Face
#4	12.50	18.00	7.00	5.00
#5	18.00	18.00	5.00	5.00
#6	18.00	18.00	5.00	5.00
#7	18.00	18.00	5.00	5.00
#8	18.00	18.00	5.00	5.00
#9	18.00	18.00	5.00	5.00
#10	18.00	18.00	5.00	5.00
#11	18.00	18.00	5.00	5.00

TOE DESIGN:

* Steel Design Comb. = 1.2D + 1.6L + 1.6H + 0.5R
* Thickness Design Comb. = 1.2D + 1.6L + 1.6H + 0.5R
* Available Length for Hook Embedment into Stem = 4.25 in.
* Available Length for Straight Embed. into Toe = 6.04 in.

d (in.)	Mu (ft-k)	Vu (kip)	Phi Vn (kip)	As Flex. (in^2)	As Min. (in^2)	As T+S (in^2)	As Req'd (in^2)
5.00	0.21	0.22	5.69	0.009	0.012	0.115	0.115

	Development Length Straight (in.)	Hook (in.)	Percent Develop.	Spac. (in.)
#4				18.00
#5				18.00
#6				18.00
#7				18.00
#8				18.00
#9				18.00
#10				18.00
#11				18.00

HEEL DESIGN:

* Steel Design Comb. = 1.2D + 1.6L + 1.6H + 0.5R
* Thickness Design Comb. = 1.2D + 1.6L + 1.6H + 0.5R
* Available Length for Straight Embedment into Toe = 14.04 in.
* Available Length for Straight Embedment into Heel = 6.04 in.

d (in.)	Mu (ft-k)	Vu (kip)	Phi Vn (kip)	As Flex. (in^2)	As Min. (in^2)	As T+S (in^2)	As Req'd (in^2)
5.00	-0.21	-0.59	5.69	0.009	0.013	0.115	0.115

	Development Length Straight (in.)	Hook (in.)	Percent Develop.	Spac. (in.)
#4				18.00
#5				18.00
#6				18.00
#7				18.00
#8				18.00
#9				18.00
#10				18.00
#11				18.00

LONGITUDINAL FOOTING REINFORCEMENT (TEMP & SHRINK ONLY):

	Spacing (in.)
#4	20.83
#5	32.29
#6	45.83
#7	62.50
#8	82.29
#9	104.17
#10	132.29
#11	162.50

Gilt Pit, 6' Pumpout Wall

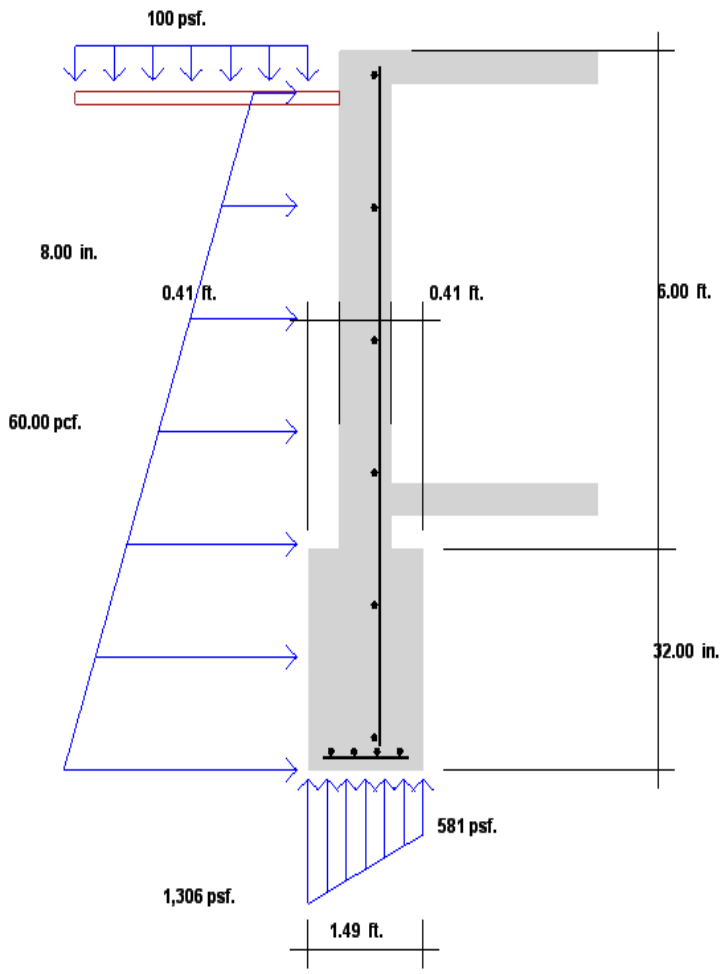

```
                 QuickWall 9.0 - RETAINING WALL ANALYSIS AND DESIGN
================================================================================
Job ID  : Bivouac Farm
Job Description : Gilt 6' Pumpout Wall                            Designed By :
================================================================================

FOOTING DESIGN METHOD:  Ultimate Strength ACI 318-14
STEM DESIGN METHOD   :  Ultimate Strength ACI 318-14 (Concrete)
WALL TYPE            :  Basement Wall, restricted against sliding

RETAINING WALL DIMENSIONS:
-------------------------------------
Wall Stem Height            =   6.00 ft.
Stem Thickness @ Top        =   8.00 in.
Stem Thickness @ Bottom     =   8.00 in.

Footing Thickness           =  32.00 in.
Heel Width . . . . . . Min. =   0.41 ft.     Design Heel Width =   0.41 ft.
                       Max. =  10.00 ft.
Toe Width  . . . . . . Min. =   0.41 ft.     Design Toe Width  =   0.41 ft.
                       Max. =  10.00 ft.
Footing Key Depth           =   0.00 ft.     Design Key Depth  =   0.00 ft.
Footing Key Width           =   0.00 ft.     Design Key Width  =   0.00 ft.
BackFill Slope (Vert/Horiz) =   0.00 :12

RETAINING WALL LOADS:
-------------------------------------
Horizontal Equivalent Fluid Pressure     =  60.00 pcf.  (Load Case = Soil)
Backfill Height                          =   5.50 ft.
Equivalent Fluid Pressure Angle          =    N/A deg.
Vertical Surcharge on Backfill           =    100 psf.  (Load Case = Soil)
Horizontal Surcharge                     =      0 psf.  (Load Case = Wind)
Vertical Surcharge on Toe                =      0 psf.  (Load Case = Soil)
Wind Load on Fence                       =      0 psf.  (Load Case = Wind)
Fence Height                             =   0.00 ft.

Line Ld.   Type      Magnitude    Dist. (x)    Load Case
  No.    (H or V)      (plf)        (ft.)
  1
  2
  3
  4
  5
  6
  7
  8
  9
  10

Notes:  1. "H" = Horizontal loads.  "V" = Vertical loads.
        2.  Vertical loads are positive down.
```

```
ULTIMATE STRENGTH LOAD COMBINATIONS (Concrete Design):
-------------------------------------

1.4D + 1.4H
1.2D + 1.6L + 1.6H + 0.5R
1.2D + 1.6R + 1.6H + 1.0L
1.2D + 1.6R + 1.6H + 0.5W
1.2D + 1.0W + 1.0L + 0.5R
1.2D + 1.0E + 1.0L + 1.6H + 0.2R
0.9D + 1.0W + 1.6H
0.9D + 1.0E + 1.6H

WORKING STRESS LOAD COMBINATIONS (Stability Checks and Masonry Design):
-------------------------------------

D + L + R + H
D + L + 0.6W + H
D + L + 0.6W + 0.5R + H
D + L + R + 0.3W + H
D + L + R + E/1.4 + H
D + E/1.4 + H
```

```
RETAINING WALL RESISTING FORCES:
------------------------------------
Allowable Soil Pressure         =  2,000 psf.
Passive Equivalent Fluid Press. =    N/A
Passive Soil Height             =    N/A
Coefficient of Friction         =    N/A
Cohesion                        =    N/A

Use Vertical Surcharge as Resisting Wt.? =    N/A

Overturning Safety Factor       =    N/A
Sliding Safety Factor           =    N/A
Limit Reaction to Mid 1/3?      =    N/A


MATERIAL DATA:
------------------------------------
Concrete Strength, f'c      =   4.00 ksi.
Steel Yield Strength, Fy    =  60.00 ksi.

Concrete Unit Weight        = 145.00 pcf.
Soil Unit Weight            = 110.00 pcf.
Fence Weight                =  10.00 psf.


REINFORCING STEEL DATA:
------------------------------------
Concrete cover to center of steel:
          Wall Outside Face =   4.25 in.
 Footing Heel (Bottom Face) =  28.00 in.
  Footing Toe (Bottom Face) =  28.00 in.

Minimum Ratios for Shrinkage and Temperature Reinf:
       Vertical Stem Reinf. = 0.0012
     Horizontal Stem Reinf. = 0.0020
      Footing Reinforcement = 0.0012
```

```
*************************************************
       S U M M A R Y   O F   R E S U L T S
*************************************************
```

DIMENSIONS:

Stem Height	= 6.00 ft.	Heel Length	= 0.41 ft.
Stem Thick. @ Top	= 8.00 in.	Toe Length	= 0.41 ft.
Stem Thick. @ Base	= 8.00 in.	Total Ftg. Width, B	= 1.49 ft.
Footing Thickness	= 32.00 in.	Key Depth	= 0.00 ft.
		Key Width	= 0.00 ft.

ANALYSIS RESULTS:

Max Brg Press. @ Toe	= 581 psf.	Sliding Force	= 0 Lb
@ Heel	= 1,306 psf.	Resisting Force	= N/A
Allowable Brg. Press.	= 2,000 psf.	F.O.S.	= N/A
Resultant Loc From C.L.	= -0.10 ft.	Overturn. Moment	= 0 ft-lb
Kern Point Loc., B/6	= 0.25 ft.	Resisting Moment	= 1,176 ft-lb
Limit Resultant To Mid 1/3?	= N/A	F.O.S.	= N/A

DESIGN RESULTS: Design Method, Stem: USD, ACI 318-14 (Concrete)
Ftg.: Ultimate Strength ACI 318-14

	d (in.)	Mu (ft-k)	Vu (kip)	Phi Vn (kip)	As Flex. (in^2)	As Min. (in^2)	As T+S (in^2)
Stem :	3.75	2.79	1.73	4.27	0.171	0.150	0.168
Toe :	4.00	0.03	0.02	4.55	0.002	0.002	0.461
Heel :	4.00	-0.03	-0.12	4.55	0.002	0.002	0.461
Key :	0.00	0.00	0.00	0.00	0.000	0.000	0.000

Notes: 1. Stem moments are positive if they cause tension on the soil face. Negative if they cause tension on the outside face. Stem shear is positive to the left as measured on a section cut below the top of wall.

2. Heel moments are positive if they cause tension in the top of the footing. Heel shear is positive up as measured on a section cut to the right of the end of the heel.

3. Toe moments are positive if they cause tension in the bottom of the footing. Toe shear is positive up as measured on a section cut to the left of the end of the toe.

```
*************************************************
 S T A B I L I T Y   A N A L Y S I S   R E P O R T
*************************************************

-------------------------------------------------------------------------------
Stability Analysis: Governing Combination = D + L + R + H

----------RESISTING FORCES---------     ---------OVERTURNING FORCES---------
Element    Weight  x  Arm  = Moment     Element      Force  x  Arm  = Moment
Soil          248               318     R at Top      -124    8.67    -1,072
Ftg.          575    0.74       427     R at Bot.   -2,323    2.67    -6,194
Stem          580    0.74       431     Horiz. EFP   2,001    2.72     5,447
Vert Sur                               Vert Sur       445    4.08     1,819
Vert EFP                               Horiz Sur
Toe Sur.                               Wind
Fence Wt.                              Horiz line
V. line                                Vert. line
          --------          --------                --------          --------
Sum WT =    1,403    MR =     1,176    Sum F =          0   MOT =         0

-------------------------------------------------------------------------------

Friction Force        =    N/A        F.O.S. Sliding    =   RF / F =    N/A
Passive Pressure      =    N/A        F.O.S. Overturn.  = MR / MOT =    N/A
Cohesion              =    N/A
                         --------          Coef. Vert. Surcharge or Line Load
Resist. Force, Sum RF =      N/A           to Horiz. = EFP / Soil Dens. =  0.545

-------------------------------------------------------------------------------

Resultant Loc From Toe,      X = (MR - MOT) / Sum WT     =    0.84 ft.
Eccentricity From Ftg. C.L., e = (B / 2) - X             =   -0.10 ft.

Soil Pressure @ Toe            = (WT / B) * (1 + 6e/B)   =     581 psf.
Soil Pressure @ Heel           = (WT / B) * (1 - 6e/B)   =   1,306 psf.
```

```
*************************************************
   D E T A I L E D   D E S I G N   R E P O R T
*************************************************
```

STEM DESIGN: Steel Design Comb = 1.2D + 1.6L + 1.6H + 0.5R
Shr Strength @ Base, Phi Vn = 4.27 kip

Dist From Top (ft)	d (in.)	Mu (ft-k)	Vu (kip)	As Flex. (in^2)	As Min. (in^2)	As T+S (in^2)	As Reqd (in^2)	Comb
0.60	3.75	-0.12	-0.19	0.007	0.009	0.115	0.115	2
1.20	3.75	-0.21	-0.11	0.013	0.017	0.115	0.115	2
1.80	3.75	-0.25	0.00	0.015	0.020	0.115	0.115	2
2.40	3.75	-0.21	0.14	0.012	0.016	0.115	0.115	2
3.00	3.75	-0.07	0.32	0.004	0.006	0.115	0.115	2
3.60	3.75	0.18	0.53	0.011	0.015	0.115	0.115	2
4.20	3.75	0.58	0.78	0.034	0.046	0.115	0.115	2
4.80	3.75	1.13	1.06	0.068	0.090	0.115	0.115	2
5.40	3.75	1.86	1.38	0.113	0.150	0.115	0.150	2
6.00	3.75	2.79	1.73	0.171	0.150	0.168	0.171	2

Vertical Stem Reinforcement:
Shear-Friction Steel Added at Stem Base (ACI 14 22.9), Avf = 0.053 in^2
Available Length for Hook Embedment into Footing = 4.50 in.
Available Length for Straight Embedment into Stem = 70.00 in.

	Development Length Straight (in.)	Hook (in.)	Percent Develop.	Spac. (in.)	50% Cut Off (in.)
#4				14.01	
#5				18.00	
#6				18.00	
#7				18.00	
#8				18.00	
#9				18.00	
#10				18.00	
#11				18.00	

Horizontal Stem Reinforcement:
Area of steel for Shrinkage and Temp. Reinforcement = 0.192 in^2

	-----Spacing, in.----- I.F. Only	EA. Face	------Total Bars------ I.F. Only	EA. Face
#4	12.50	18.00	7.00	5.00
#5	18.00	18.00	5.00	5.00
#6	18.00	18.00	5.00	5.00
#7	18.00	18.00	5.00	5.00
#8	18.00	18.00	5.00	5.00
#9	18.00	18.00	5.00	5.00
#10	18.00	18.00	5.00	5.00
#11	18.00	18.00	5.00	5.00

TOE DESIGN:

* Steel Design Comb. = 1.4D + 1.4H
* Thickness Design Comb. = 1.4D + 1.4H
* Available Length for Hook Embedment into Stem = 4.25 in.
* Available Length for Straight Embed. into Toe = 2.92 in.

d (in.)	Mu (ft-k)	Vu (kip)	Phi Vn (kip)	As Flex. (in^2)	As Min. (in^2)	As T+S (in^2)	As Req'd (in^2)
4.00	0.03	0.02	4.55	0.002	0.002	0.461	0.461

	Development Length Straight (in.)	Hook (in.)	Percent Develop.	Spac. (in.)
#4				5.21
#5				8.07
#6				11.46
#7				15.63
#8				18.00
#9				18.00
#10				18.00
#11				18.00

HEEL DESIGN:

* Steel Design Comb. = 1.4D + 1.4H
* Thickness Design Comb. = 1.4D + 1.4H
* Available Length for Straight Embedment into Toe = 10.92 in.
* Available Length for Straight Embedment into Heel = 2.92 in.

d (in.)	Mu (ft-k)	Vu (kip)	Phi Vn (kip)	As Flex. (in^2)	As Min. (in^2)	As T+S (in^2)	As Req'd (in^2)
4.00	-0.03	-0.12	4.55	0.002	0.002	0.461	0.461

	Development Length Straight (in.)	Hook (in.)	Percent Develop.	Spac. (in.)
#4				5.21
#5				8.07
#6				11.46
#7				15.63
#8				18.00
#9				18.00
#10				18.00
#11				18.00

LONGITUDINAL FOOTING REINFORCEMENT (TEMP & SHRINK ONLY):

	Spacing (in.)
#4	5.21
#5	8.07
#6	11.46
#7	15.63
#8	20.57
#9	26.04
#10	33.07
#11	40.63

Concrete Footing Design

Job: Bivouac Farm
Description: Pillar Footing Gilt
Time: 10:15 AM 6/6/2019

Designed By:
Checked By:
Program: Spread Footing Design v3.2 Code: ACI 2008

SOIL DATA				CONCRETE DATA				COLUMN DATA			
Max. Vert Press.	=	2.000	K /Ft ^2	F'c	=	4.000	K /In ^2	F'c	=	4.000	K /In ^2
Max. Flexural Press.	=	2.500	K /Ft ^2	Density	=	150.000	Lb/Ft ^3	X Dim.	=	12.000	In
Density	=	100.000	Lb/Ft ^3	Fy	=	60.000	K /In ^2	Z Dim.	=	12.000	In
Phi Angle	=	30.000	Deg					X Offset	=	0.000	Ft
Coeff. of Friction	=	0.330						Z Offset	=	0.000	Ft
Cohesion	=	0.000	Lb/Ft ^2	**SURCHARGE DATA**							
Ftg. Depth	=	3.500	Ft	+X,+Z Quadrant	=	0.000	K /Ft ^2				
FS Uplift	=	1.500		+X,-Z Quadrant	=	0.000	K /Ft ^2	**BASE PLATE DATA**			
FS Overturning	=	1.500		-X,-Z Quadrant	=	0.000	K /Ft ^2	X Dim.	=	0.000	In
FS Sliding	=	1.500		-X,+Z Quadrant	=	0.000	K /Ft ^2	Z Dim.	=	0.000	In

C O L U M N L O A D D E S C R I P T I O N S

COLUMN LOAD	DESCRIPTION
1	

L O A D C O M B I N A T I O N S

LOAD COMBINATION	DESCRIPTION
1	1.4D
2	1.2D + 1.6L + 0.5R
3	1.2D + L + 1.6R
4	1.2D + 0.8W + 1.6R
5	1.2D + L + 1.6W + 0.5R
6	1.2D + L + 1.4E + 0.2R
7	0.9D + 1.6W
8	0.9D + 1.4E
9	1.2D - 0.8W + 1.6R
10	1.2D + L - 1.6W + 0.5R
11	1.2D + L - 1.4E + 0.2R
12	0.9D - 1.6W
13	0.9D - 1.4E

U N F A C T O R E D L O A D S I N P U T

COLUMN LOAD No. 1	DEAD LOAD	LIVE LOAD	WIND LOAD	EARTHQUAKE LOAD	ROOF LOAD
Vertical =	-6.000 K	-12.000 K	0.000 K	0.000 K	0.000 K
Moment X =	0.000 Ft-K	0.000 Ft-K	0.000 Ft-K	0.000 Ft-K	0.000 Ft-K
Moment Z =	0.000 Ft-K	0.000 Ft-K	0.000 Ft-K	0.000 Ft-K	0.000 Ft-K
Horizontal X =	0.000 K				
Z =	0.000 K				

F O O T I N G O U T P U T

FOOTING DESIGN

X Dimension =	3.250	Ft	
Z Dimension =	3.250	Ft	
Thickness =	8.000	In	
Max. Press. =	1.737	K /Ft ^2	

SHEAR STRESSES (ONE WAY)

+X Area =	0.035	K /In ^2
-X Area =	0.035	K /In ^2
+Z Area =	0.050	K /In ^2
-Z Area =	0.050	K /In ^2
Allow. =	0.095	K /In ^2

SHEAR STRESSES (TWO WAY)

+X Area =	0.086	K /In ^2
-X Area =	0.086	K /In ^2
+Z Area =	0.086	K /In ^2
-Z Area =	0.086	K /In ^2
Allow. =	0.190	K /In ^2

X Dimension Governing Column = 1, Combination = 2
Z Dimension Governing Column = 1, Combination = 2
Thickness = User Defined Minimum
Max. Pressure Governing Column = 1, Combination = 2
Design Controlled by Soil Pressures

BOTTOM STEEL DESIGN (Parallel to X Axis)
Governing Column = Temp/Shrink Minimum
Moment (+X Area) = 5.140 Ft-K

BOTTOM STEEL DESIGN (Parallel to Z Axis)
Governing Column = Temp/Shrink Minimum
Moment (+Z Area) = 5.140 Ft-K

```
        (-X Area)  =        5.140  Ft-K
   Steel Required    =        0.562  In^2  (Min)
   Dist. to Centroid =        3.500  In

   Typical Spacings
       6       #3 Bars at    6.600  In. Centers
       3       #4 Bars at   16.500  In. Centers
```

```
        (-Z Area)  =        5.140  Ft-K
   Steel Required    =        0.562  In^2   (Min)
   Dist. to Centroid =        4.500  In

   Typical Spacings
       6       #3 Bars at    6.600  In. Centers
       3       #4 Bars at   16.500  In. Centers
```

QUANTITIES : 10.511 Lbs of Steel and 7.042 Ft^3 of Concrete.

Appendix A
PA313 Waste Storage Facility

313-CPS-1

Natural Resources Conservation Service

CONSERVATION PRACTICE STANDARD

WASTE STORAGE FACILITY

Code 313

(No)

DEFINITION

An agricultural waste storage impoundment or containment made by constructing an embankment, excavating a pit or dugout, or by fabricating a structure.

PURPOSE

To store manure, agricultural by-products, wastewater, and contaminated runoff to provide the agricultural operation management flexibility for waste utilization.

CONDITIONS WHERE PRACTICE APPLIES

Use where regular storage is needed for wastes generated by agricultural production or processing and where soils, geology, and topography are suitable for construction of the facility. For reception pits, use the NRCS Conservation Practice Standard (CPS) Waste Transfer (Code 634).

For liquid waste storage facilities implemented with an embankment, this practice applies only to low hazard structures as defined in the NRCS National Engineering Manual (NEM), Part 520.23.

This practice does not apply to the storage of human waste or routine animal mortality.

CRITERIA

General Criteria Applicable to All Waste Storage Facilities.

Laws and Regulations. Plan, design, and construct the waste storage facility to meet all Federal, State, and local laws and regulations. Pennsylvania Department of Environmental Protection (DEP) requires a licensed Professional Engineer registered in Pennsylvania to affix their seal to the design and construction documents assuring full responsibility for the adequacy of all aspects of the new facility.

Location. Locate and design the top of the waste storage facility such that it is outside the 100-year floodplain unless site restrictions require locating it within the floodplain. If located in the floodplain, protect the facility from inundation or damage from a 25-year flood event. Facility finished floor shall be at or above 25-year flood elevation unless floor designed for hydrostatic condition. Additionally, follow the policy found in the NRCS General Manual (GM) 190, Part 410.25, Flood Plain Management, which may require providing additional protection for storage structures located within the floodplain.

Storage Period. The storage period is the maximum length of time anticipated between emptying events. Base the minimum storage period on the timing required for environmentally safe waste utilization consistent with the NRCS CPS Nutrient Management (590) plan which considers the climate, crops, soil, equipment, and local, State, and Federal regulations.

Design Storage Volume. Size the facility to store the following volumes as appropriate.

Operational Volume

- Manure, wastewater, bedding, and other wastes accumulated during the storage period.
- For liquid or slurry storage facilities, include normal precipitation (omit diverted roof runoff) less evaporation during the storage period.
- Normal runoff from the facility's drainage area during the storage period.
- Planned maximum residual solids. Provide a minimum of 6 inches for tanks unless a sump or other device allows for complete emptying.
- Additional storage when required to meet management goals or regulatory requirements.

Emergency Volume (liquid storages only)

- 25-year, 24-hour precipitation on the surface of the liquid or slurry storage facility at the maximum level of the required design storage.
- 25-year, 24-hour runoff from the facility's drainage area.

Freeboard Volume (for liquid or slurry waste storage exposed to precipitation)

- Minimum of 6” for vertical walled tanks.
- Minimum of 12” for all other facilities, except as noted below.
- Minimum of 24” for unroofed CAFOs (Confined Animal Feeding Operation).

Exclude non-polluted runoff from the structure to the fullest extent practical except where including the runoff is advantageous to the operation of the agricultural waste management system.

Inlet. Design inlet to resist corrosion, plugging, freeze damage, and ultraviolet deterioration. Incorporate erosion protection as necessary. Inlet components shall meet the requirements of NRCS CPS Manure Transfer (634).

Waste Removal. Provide components for removing waste such as gates, pipes, docks, wet wells, pumping platforms, retaining walls, or ramps. Incorporate features to protect against erosion, tampering, and accidental release of stored waste as necessary. Design ramp slopes to accommodate anticipated equipment and traction available. Use NRCS CPS Nutrient Management (Code 590) for land application of stored material or follow other disposal options outlined in a Comprehensive Nutrient Management Plan (CNMP).

Accumulated Solids Removal. To preserve storage volume, make provision for periodic removal of accumulated solids. The anticipated method for solids removal must be accommodated in design, particularly in determining the configuration of impoundments and the type of liner to be used.

Maximum Operating Level. The maximum operating level for liquid storage structures is the level that provides the operational volume.

Staff Gauge. Place a staff gauge or other permanent marker in the liquid storage facility to clearly indicate the following elevations:

- Maximum operating level (top of the operational volume).
- Emergency level (top of the design storage volume).

For storages where the contents are not visible, and a staff gauge would not be visible, such as below a slatted floor, identify the method for the operator to measure the depth of accumulated waste in the Operation and Maintenance Plan.

Safety. Include appropriate safety features to minimize the hazards of the facility (refer to American Society of Agricultural and Biological Engineers (ASABE) Standard EP470, Manure Storage Safety for guidance, as needed).

Provide warning signs, fences, ladders, ropes, bars, rails, and other devices as appropriate, to ensure the safety of humans and livestock. Provide ventilation and warning signs for covered waste holding structures, as necessary, to prevent explosion, poisoning, or asphyxiation. Depending on configuration, structures such as dry well pump pits can be classified as “Confined Space” and will need appropriate signage and safe entry requirements. Include reference in Operation and Maintenance plan.

Safety signs shall be provided at uncovered manure storages to warn about drowning, improper loading, and/or agitation hazards. Safety signs shall be installed at each agitation location. Multiple drowning hazard safety signs are required at larger structures. Safety signs shall be provided for covered waste holding structures (including slatted tops) to warn about confined spaces and agitation hazards.

Gypsum based products and/or silage leachate shall not be directed into solid covered or slotted under-the-barn waste storage due to potential development of deadly gases during agitation while the facility is occupied. Open topped facilities that receive gypsum products can result in deadly gas production during agitation. Monitoring air quality is strongly recommended.

Design covers and grating over openings with a maximum of 6 inches such that livestock or humans cannot accidentally displace them and fall into the facility. Include complete safety fencing and gating around openings when allowing larger grate spacing to avoid plugging or no grates for pump access.

Place a fence around impoundments and uncovered tanks which have exposed walls less than 5 feet above ground surface. The minimum fence height shall be 4.5 feet. Use the NRCS CPS Fence (Code 382) for design of a fence that will prevent accidental entry by people or animals likely to be onsite. Post universal warning signs to prevent children and others from entering liquid waste storage structures.

Pipelines shall be provided with a water sealed trap and vent or similar device, if there is a potential, based on design configuration for gases to enter buildings or other confined spaces.

Ramps used to empty waste shall have a slope typically ranging from 4 to 10 horizontal to 1 vertical. Slopes and surface roughness shall be designed in accordance with specific use.

Roofs and Covers. Use NRCS CPS Roofs and Covers (Code 367) for design of waste storage facility covers or roofs, as needed.

Treated Wood. Use criteria from NRCS CPS Roof and Covers (Code 367) for treated wood and fasteners.

Foundations (General)

Perform subsurface investigations for all waste storage impoundments sufficient in detail and analysis to support the design in accordance with NRCS NEM, Part 531, Geology. Investigate at least 2 feet below anticipated bottom of sub-grade except in areas of Karst or highly fractured bedrock or permeable soils, investigate at least three feet. Describe the soil material encountered, location of any seeps, depth-to-high-water table, depth to bedrock, and presence of sink holes in karst topography.

Potential uplift pressures shall be eliminated by drainage or be included in the structural design (including buoyancy and flotation).

Pervious geotextile is optional to protect drain fill from contamination during the placement of overlying concrete if drain fill is at least 4 inches in depth and groundwater is not anticipated.

Subsurface drainage systems that serve to intercept ground water and/or relieve hydrostatic pressure and/or lower ground water shall be outletted as far from water bodies as possible. Drains should not outlet in surface water bodies whenever possible. If a drain outlets at a water body, it shall be equipped with a sump and/or valve to intercept and redirect contaminated drainage away from the water body. The design of subsurface drainage systems shall address all these items:

1. Locate drainage lines between the expected water source and the storage facility to be protected, but as far as possible from the waste storage facility.

2. Drainage lines must have positive and correct slope from beginning to end to convey flow and reduce the risk of blockage from fine soil particles.

3. Drainage lines must have proper depth of cover or be designed for heavier loads or protected to reduce the risk of crushing by vehicles and/or construction equipment.

4. Lines must be as short and simple as possible to bring drainage water to a free outlet as quickly as possible. The end of the pipe should be outletted at a short and abrupt elevation change to provide depth of cover as well as provide a proper location to check/monitor the outlet flow. Each outlet shall be marked with a permanent post, extending at least 5' out of the ground.

5. Perimeter drains, foundation drains and leak detection systems shall <u>not</u> be inter-connected with other subsurface drains or underground outlets.

6. The area around the outlet should be sufficient to allow effective response, if contaminated discharge should occur from the outlet or install an observation well as per item 7.

7. Include an observation well on the outside of the structure if the discharge point is less than 50 feet from a waterway or if the line length is longer than 150'. The outlet side of the observation well shall include a valve.

Leak Detection Systems. Include piping system that collects any leakage that could collect between the primary storage and secondary liner. A minimum of 4 inches of ASHTO 57 stone or other materials appropriate for the liner such a geotextile to direct flow to the pipe. Drain fill and/or geotextile shall be used to intercept and carry leakage out to the perimeter drain or under the structure.

Excavations. Side slopes can be steeper than 2 horizontal to 1 vertical provided an on-site soil investigation is done and the soils type support the selected slope meeting OSHA 1926 Subpart P App B. regulations.

<u>Additional Criteria for Liquid Waste Storage Impoundments</u>

A liquid waste storage impoundment is a facility where the stored material does not consistently stack and is either a natural topographic depression, manmade excavation, or diked area formed primarily of earthen materials, such as soil (although the unit may be lined with manmade materials) .

Foundation. Locate the impoundment in soils with a permeability that meets all applicable regulations or line the impoundment with suitable material. Use liners which meet or exceed NRCS CPS Pond Sealing or Lining (Codes 520, 521, or 522).

For the design of a liner on a site located in a floodplain and other locations where there is potential for uplift, include an evaluation of all potential buoyant uplift forces on the liner. Limit projected uplift head under clay liners to a gradient of less than 0.5 ft. /ft. in the clay liner. The gradient is determined as the difference in total head between the top and the bottom of a clay liner when buoyant forces exist (such as when the floodplain is flooded) divided by the thickness of the clay liner.

Design Bottom Elevation. Locate the impoundment bottom elevation a minimum of 2 feet above the seasonal high-water table unless special design features are incorporated that address buoyant forces,

impoundment seepage rate and non-encroachment of the water table by contaminants. The water table may be lowered by use of drains to meet this requirement.

Outlet. An outlet that can automatically release stored material is not permitted except for septic tanks that feed a treatment system such as a waste treatment strip/leaching field or outlets leading to another storage facility with adequate capacity. Design a permanent outlet that will resist corrosion and plugging. Provide a backflow prevention measure for an outlet that pumps wastewater to secondary storage located at a higher elevation (see **Waste Inlet**).

Waste Inlet. Sites with waste being pumped uphill, i.e. the top of the waste storage structure is above the top of source, the pipe shall include at least two valves. The maximum size shall be 12 inches. No valves are needed if the exit inlet enters over the top and include measures to avoid back-siphoning.

Embankments. For an impoundment with greater than one acre of surface area and where wave action is a concern, increase the embankment height to account for calculated wave height. In all cases, increase the constructed embankment height by at least 5 percent to allow for settlement. Stabilize all embankments to prevent erosion or deterioration.

Minimum embankment top widths are shown in table 1. Design the combined side slopes of the settled embankment to be equal to or flatter than 5 horizontal to 1 vertical, with neither slope steeper than 2 horizontal to 1 vertical unless provisions are made for stability. The total embankment height (effective height) is the difference in elevation between the auxiliary (emergency) spillway crest and the settled top of the embankment if there is no auxiliary spillway and the lowest point in the cross section taken along the centerline of the embankment.

Table 1. Minimum Top Widths

Total embankment height (ft.)	Top width (ft.)
Less than 15	8
15–19.9	10
20–24.9	12
25–29.9	14
30.0–35.0	15

Spillway or Equivalent Protection. For a facility having a total embankment height greater than 20 feet, construct an auxiliary (emergency) spillway or route through the spillway or store below the spillway another volume equivalent to the emergency volume.

Excavations. Design excavated side slopes to meet the requirements of the liner used, see NRCS CPS Pond Sealing or Lining, Compacted Soil Treatment (Code 520), Pond Sealing or Lining, Flexible Membrane (Code 521a) or Pond Sealing or Lining, Concrete (Code 522) **.**

<u>Additional Criteria for Fabricated Structures</u>

Foundation. Based on subsurface investigation, provide a foundation for fabricated waste storage structures to safely support all superimposed loads without excessive movement or settlement.

Tanks may be designed with or without a cover. Design openings in a covered tank to accommodate equipment for loading, agitating, and emptying. Equip these openings with fencing, grills or secure covers for safety, and for odor and vector control as necessary.

Walls, footings, and roofs/covers are to be designed as structural elements.

All structures shall be underlain by free draining material or shall have a footing located below the anticipated frost depth.

Where a non-uniform foundation cannot be avoided or where applied loads may create highly variable foundation loads, calculate settlement based upon site-specific soil test data. Index tests of site soil may allow correlation with similar soils for which test data is available. If no test data are available, use presumptive bearing strength values for assessing actual bearing pressures obtained from table 2 or another nationally recognized building code. In using presumptive bearing values, provide adequate detailing and articulation to avoid distressing movements in the structure.

For bedrock foundations with joints, fractures, or solution channels, separate the floor slab and the bedrock by—

- A minimum of 1 foot of soil.
- A liner that meets or exceeds NRCS CPS Pond Sealing or Lining (Codes 520, 521, or 522)).
- Other appropriate method or alternative that achieves equal protection.

For storage of liquid or semi-solid materials, foundations consisting of bedrock with open joints, fractures, or solution channels shall be grouted or otherwise sealed or a separation layer provided consisting of a minimum of 1 foot of soil with a permeability less than or equal to 1×10^{-4} cm/sec between the floor slab or flexible membrane liner and the bedrock or an alternative that will achieve equal protection. A layer of drain fill or geotextile shall be provided to intercept any leakage through the floor slab or flexible membrane liner. When a floor slab is inside a deeper footing, one square foot of drain fill (or an alternate with equivalent flow capacity) shall be provided at 50-foot intervals along the footing, to connect to the perimeter drain outside the footing to provide water pressure relief.

Table 2. Presumptive Allowable Foundation and Lateral Pressure[1]

Class of materials	Allowable foundation pressure (psf)	Lateral bearing (psf/ft.) below natural grade	Coefficient of friction	Cohesion (psf)
Crystalline bedrock	12,000	1,200	0.70	-
Sedimentary and foliated rock	4,000	400	0.35	-
Sandy gravel or gravel (GW and GP)	3,000	200	0.35	-
Sand, silty sand, clayey sand, silty gravel, clayey gravel (SW, SP, SM, SC, GM and GC)	2,000	150	0.25	-
Clay, sandy clay, silty clay, clayey silt, silt and sandy silt (CL, ML, MH and CH)	1,500	100	-	130

[1] International Building Code (IBC), 2015, International Code Council (ICC)

Structural Loadings. Design the waste storage structure to withstand all anticipated loads in accordance with the requirements in NRCS NEM, Part 536, Structural Design. Such loads should include internal and external loads, hydrostatic uplift pressure, concentrated surface and impact loads, and water pressure due to seasonal high-water table, frost or ice.

Calculate loading from lateral earth pressures using soil strength values determined from the results of appropriate soil tests and procedures described in Technical Release 210-74, Lateral Earth Pressures. Table 3 provides minimum lateral earth pressure values when soil strength tests are not available. If heavy equipment will operate near the wall, use an additional soil surcharge or an additional internal lateral pressure in the wall analysis as appropriate.

For the lateral load from stored waste not protected from precipitation, use a minimum 65 lb. /ft2/ft. of depth as the design internal lateral pressure. Use a minimum value of 60 lb. /ft2/ft. of depth for the lateral load from stored waste protected from precipitation and not likely to become saturated. Use a minimum internal lateral pressure of 72 lb./ft2/ft of depth for sand-laden manure storage if the percentage of sand exceeds 20%. Designers may use lesser values if supported by measurement of actual pressures of the waste to be stored.

Table 3. Minimum Lateral Earth Pressure Values[1]

Description of backfill material [c]	Unified soil classification	Design lateral soil load (lb./ft^2/ft. of depth) [a]	
		Active pressure (free standing walls)	At-rest pressure (frame tank walls)
Well-graded, clean gravels; gravel-sand mixes	GW	30	60
Poorly graded clean gravels; gravel-sand mixes	GP	30	60
Silty gravels, poorly graded gravel-sand mixes	GM	40	60
Clayey gravels, poorly graded gravel-sand mixes	GC	45	60
Well-graded, clean sands; gravely sand mixes	SW	30	60
Sand-silt clay mix with plastic fines	SP	30	60
Silty sands, poorly graded sand-silt mixes	SM	45	60
Sand-silt clay mix with plastic fines	SM-SC	45	100
Clayey sands, poorly graded sand-clay mixes	SC	60	100
Inorganic silts and clayey silts	ML	45	100
Mixture of inorganic silt and clay	CL-ML	60	100
Inorganic clays of low to medium plasticity	CL	60	100
Organic silts and silt clays, low plasticity	OL	Note [b]	Note [b]
Inorganic clayey silts, elastic silts	MH	Note [b]	Note [b]
Inorganic clays of high plasticity	CH	Note [b]	Note [b]
Organic clays and silty clays	OH	Note [b]	Note [b]

[1] Table 1610.1, Lateral Soil Load, International Building Code (IBC), 2015, International Code Council (ICC).

[a] Design loads based on moist conditions for the specified soils at optimum density. Include the weight of the buoyant soil plus hydrostatic pressure for submerged or saturated soil.

[b] Unsuitable as backfill material.

[c] Base the definition and classification of soil in accordance with ASTM D 2487.

Structural Design for Non-Sensitive Environmental Setting. Design structures with reinforced concrete (ACI 318), steel, wood, or masonry materials in accordance with NRCS-NEM, Part 536, Structural Engineering. Account for all items that will influence the performance of the structure, including loading assumptions, durability, serviceability, material properties and construction quality. Ensure that the material used for a fabricated structure is compatible with the waste product to be stored.

Structural Design for Sensitive Environmental Settings (SES). Where liquid-storage is to be provided in sensitive environmental settings (i.e., tanks in areas with shallow wells in surface aquifers, high-risk karst topography or other site-specific concerns), design the storage structure as a reinforced concrete hydraulic or environmental structure according to NRCS NEM, Part 536, Structural Design (ACI 350).

Alternatively, use a flexible liner membrane, designed and constructed in accordance with standard engineering and industry practice, to provide secondary liquid containment for structures constructed with other methods described in NRCS NEM, Part 536, Structural Design for Non-Sensitive Environmental Settings.

Structural Design for non-concrete Fabricated Structures (Both SES and non-SES sites)

Design steel structures in accordance with the applicable provisions of the current American Institute of Steel Construction (AISC) Steel Construction Manual. See NEM 536.30 for seismic analysis as appropriate.

Design wood structures in accordance with the applicable provisions of the current American Wood Council National Design Specifications (NDS) for Wood Construction and Minimum Design Loads and Associated Criteria for Buildings and other structures (ASCE/SE 7).

Slabs-on-grade (SES and non-SES) associated with all types of structures

Floors (slabs on grade) requirements are found in the Title 210 National Engineering Manual (NEM) Section 536.22. Slab design shall consider the required performance and critical applied loads along with both the subgrade material and material resistance of the concrete slab. Where applied point loads are minimal and liquid tight concrete are not required, such as roofed dry stacks, and the subgrade is uniform and dense, the minimum slab thickness shall be 5 inches.

For applications where, liquid tightness is required such as floor slabs of storage tanks or seepage control liners of waste storage ponds, the minimum thickness for uniform foundations shall be 5 inches and shall contain distributed reinforcing steel

When liquid tight concrete is required, a construction joint used as a control joint shall contain a waterstop or an elastomeric sealant which adheres to the concrete on both sides of the joint.

Construction joints that are not used as control joints shall be designed to transfer loads across the joint.

When heavy equipment loads are to be resisted and/or where a non-uniform foundation cannot be avoided, an appropriate design procedure, incorporating a subgrade resistance parameter(s), such as ACI 360 shall be used.

Tables and selection guidance meeting the NEM requirements can be found in *"Design Guide 11- Floors (Slabs-on-Ground) for Concrete Structures"* located on the Pennsylvania NRCS website under Technical Resources, Engineering, Design Guides.

These criteria also apply to floors associated with CPS Waste Transfer (634), Waste Separation Facility (632), Heavy Use Area Protection (561), Agri-Chemical Handling Facility (309) and Sediment Basin (350).

Additional Criteria - Stacking Facilities (non-liquid) floor slab (Slabs on grade)

A stacking facility may be open, covered, or roofed and is used for wastes which behave primarily as solid. Examples include separated manure solids, compost, dewatered recycled sand, poultry litter, bedded manure (sufficient bedding to allow it to stack 4 feet or higher), and waste feed. Determine the wall height using the anticipated stacking angle of the waste material. Construct a stacking facility of durable materials such as reinforced concrete, reinforced concrete block, or treated lumber. Design the stacking facility with adequate safety factors to prevent failure due to internal or external pressures,

including hydrostatic uplift pressure and imposed surface loads such as equipment which may be used within, on, or adjacent to the structure.

Seepage. Prevent leachate in amounts that would pollute surface or groundwater with collection and disposal of liquids in a safe manner as necessary. Prevent influent seepage in amounts that would infringe on designed storage capacity. Seepage control may not be necessary on sites that have a roof, waste material with little seepage potential, or in certain climates.

Internal Drainage. Make provisions for drainage of leachate, including rainfall from the stacking area (especially those without a roof). Collect leachate in a tank or waste storage impoundment, or properly treat in a lagoon or vegetated treatment area.

Poultry Litter Stacking Facility. To reduce the potential for spontaneous combustion damage to wood walled facilities, design the height of the litter stack not to exceed 7 feet, with litter to wood contact limited to 5 feet.

Additional Criteria for Waste Transfer Structures

Waste transfer structures will be designed based on ACI 318. Systems designed for external hydrostatic loading will need to apply appropriate wall and floor loadings to determine required reinforcement. Design with a minimum of 1.1 for safety factor against floatation.

CONSIDERATIONS

This standard provides criteria for Waste Storage Impoundments (earthen and HDPE lined) and fabricated structures (concrete and steel) for storage of manure, agricultural by-products, wastewater, and contaminated runoff. Options are included within the criteria to allow for different materials, methods, and referenced industrial standards.

The “Engineer of Record” shall develop the design based on materials to be stored, site location, soil investigation, regulatory requirements, and professional judgement within the criteria of this standard.

State and Federal regulations may require a higher level of containment based on watershed designation, volume of storage, and operations designated as CAFO’s. These additional precautions are not a substitution for proper design and timely on-site quality assurance during construction.

NRCS 313 CP classifies some sites as Sensitive Environmental Sites (i.e., tanks in areas with shallow wells in surface aquifers, high-risk karst topography or other site-specific concerns). High-risk areas have active sinkholes within the work limits and shall be avoided unless proper measures are taken as prescribed for Sensitive Environmental sites.
For exposed liners utilizing HDPE or similar materials that are slippery when wet, consider the use of textured liners or addition of features such as tire ladders, netting, HDPE cleats, etc. that would allow for escape from the waste storage structure.

Consider solid/liquid separation of runoff or wastewater entering impoundments to minimize the frequency of accumulated solids removal and to facilitate pumping and application of the stored waste.

Proper consideration should be given to environmental concerns, economics, the overall waste management system plan, and safety and health factors.

Since the economics and risks associated with waste storage facilities are quite high, consider providing the operator with the cost to close the facility. Cost should include removal of the planned sludge accumulation volume and the waste stored at the maximum operating volume.

Safety concerns associated with skid loaders and other manure loading equipment should be considered during project planning and design. Consider land owner/operator goals and objectives. Manure should never be lifted over fence/chain link fences into manure storages but loaded only at specifically designed locations. Signs, concrete wall extensions, push-ins with guards, lift-over access areas with guards should be considered by the designer as appropriate.

Waste storage facilities should be located as close to the source of waste and polluted runoff as practicable.

Considerations for Siting

Consider the following factors in selecting a site for waste storage facilities:

- Proximity of the waste storage facility to the source of waste.
- Access to other facilities.
- Ease of loading and unloading waste.
- Compatibility with the existing landforms and vegetation, including building arrangement, to minimize odors and adverse impacts on visual resources.
- Adequate maneuvering space for operating, loading, and unloading equipment.

Considerations for Minimizing the Potential for and Impacts of Sudden Breach of Embankment or Accidental Release from the Waste Storage Facility.

Consider features, safeguards, and/or management measures to minimize the risk of failure or accidental release, or to minimize or mitigate impact of this type of failure when any of the categories listed below might be significantly affected.

Potential impact categories from breach of embankment or accidental release include—

- Surface water bodies—perennial streams, lakes, wetlands, and estuaries.
- Critical habitat for threatened and endangered species.
- Riparian areas.
- Farmstead, or other areas of habitation.
- Off-farm property
- Historical and archaeological sites or structures that meet the eligibility criteria for listing in the National Register of Historical Places.

Consider the following either singly or in combination to minimize the potential of or the consequences of sudden breach of embankments:

- An auxiliary (emergency) spillway.
- Additional freeboard.
- Storage for wet year rather than normal year precipitation.
- Reinforced embankment— such as, additional top width, flattened and/or armored downstream side slopes.
- Secondary containment.
- Double liners.

Options to consider in order to minimize the potential for accidental release from the waste storage facility through gravity outlets include—

- Outlet gate locks or locked gate housing.
- Secondary containment.
- Alarm system.
- Another non-gravity means of emptying the waste storage facility.
- Require a double valve system and limit outlet pipe to 8 inches or less.

- Quantities.
- Approximate location of utilities and notification requirements.

OPERATION AND MAINTENANCE

Develop an operation and maintenance plan that is consistent with the purposes of the practice, its intended life, safety requirements, and the criteria for its design. At a minimum, the plan will contain where appropriate:

Include the operational requirements for emptying the storage facility including the expected storage period. Begin removal of the liquid storage facility as soon as practical after the maximum operating level has been reached. Also include the requirement that waste be removed from storage and utilized at locations, times, rates, and volume in accordance with the overall waste management system plan.

For impoundments and other liquid storages include an explanation of the staff gauge or other permanent marker to indicate the maximum operating level. For storages where the contents are not visible and a staff gauge would not be visible, such as below a slatted floor, identify the method for the operator to measure the depth of accumulated waste.

When perimeter drains, foundation drains, and leak detection systems outlet closer than 50 feet to a water body, the operation and maintenance plan shall include the requirement for monthly inspection of the outlet. In the event of a suspected problem, the landowner shall take the following actions.

- Intercept the outlet with a sump and pump the water to a location where it cannot adversely affect the quality of the water body and,
- Take immediate action to empty the storage structure and contact the designer of the structure for inspection.

The operation and maintenance plan shall provide information on toxic and explosive gases and safety precautions to be taken, where applicable.

Include a description of the routine maintenance needed for each component of the facility. Also include provisions for maintenance that may be needed as a result of waste removal or material deterioration.

Include a provision for emergency removal and disposition of liquid waste in the event of an unusual storm event that may cause the waste storage structure to fill to capacity prematurely.

Include instructions as needed for ventilating confined spaces according to ASABE Standard S607, Venting Manure Storages to Reduce Entry Risk.

Develop an emergency action plan for waste storage facilities where there is a potential for significant impact from breach or accidental release. Include site-specific provisions for emergency actions that will minimize these impacts.

The emergency action plan shall be available at the facility at all times. It shall include the phone number(s) for immediately notifying the Department of Environmental Protection of any spill, overtopping, leak or other discharge that would endanger downstream water users or would otherwise result in pollution or create a danger of pollution or would damage downstream property.

In the event the Landowner or Operator has the storage facility emptied by a custom applicator, it is the Landowner or Operator’s responsibility to review the emergency action plan with the applicator prior to agitation or unloading of the storage facility.

DOCUMENTATION

A waste storage facility shall not be reported or certified as complete until adequate documentation, showing proper installation, has been prepared. The as-built drawings and specifications shall be signed and dated by a person with construction job approval authority to indicate that the facility was installed as designed, except as noted by red line changes. Inspection notes and construction photos are part of the as-builts. A Professional Engineer must certify the completion of all liquid and semi-solid waste storage facilities.

In addition, the as-built drawings shall include the actual foundation and ground water conditions encountered during construction (if they differ from the site investigation and design assumptions), the name of the installer or manufacturer and the date of completion.

The design folder, certified as-built drawings, material certifications and specifications, inspection notes, construction photos, etc. shall be retained in the file for that land unit/field or current owner by the Engineer of Record for the life of the facility.

REFERENCES

American Society for Testing and Materials. Annual Book of ASTM Standards. Standards D 653, D 698, D 1760, D 2488. ASTM, Philadelphia, PA.

USDA NRCS. 1992. Agricultural Waste Management Field Handbook. USDA-NRCS, Washington, DC.

USDA NRCS. General Manual. USDA-NRCS, Washington, DC.

USDA NRCS. National Engineering Manual. USDA-NRCS, Washington, DC.

USDA Soil Conservation Service. 1989. Technical Release Number 74, Lateral Earth Pressures, USDA-SCS, Washington, DC.

PA313S-SP1

WASTE STORAGE STRUCTURE CONSTRUCTION SPECIFICATION

1. SCOPE

The work shall consist of furnishing materials and installing all components of the waste storage structure as outlined in this specification and the drawings.

Construction work covered by this specification shall not be performed between December 1 and the following March 15 unless the site conditions and/or the construction methods to be used have been reviewed and approved by the Engineer or his/her designated Representative.

2. MATERIALS

All materials used shall conform to the quality and grade noted on the drawings, set forth in Section 9, or as otherwise listed below:

PORTLAND CEMENT shall be Type I, IA, II or IIA and conform to ASTM-C150, unless otherwise set forth in Section 9. If Type I or II is used, an air-entrainment agent shall be used.

CONCRETE AGGREGATE shall meet the requirements and gradation specified in ASTM-C33. Coarse aggregate shall meet the gradation for size numbers 57 or 67.

WATER used in mixing or curing concrete shall be clean and free from injurious amounts of oil, acid, salt, organic matter or other deleterious substances.

REINFORCEMENT BARS shall be grade 40 or higher, and shall conform to ASTM- A615, A616, or A617. Welded wire fabric reinforcement shall conform to ASTM-A185 or A497. Reinforcement shall be free from loose rust, oil, grease, curing compound, paint or other deleterious coatings.

CONCRETE ADMIXTURES shall conform to ASTM-C260 for air-entrainment, and ASTM-C494, type A, D, F or G, for water- reduction and set-retardation, and type C or E for non-corrosive accelerators.

POZZOLAN shall conform to ASTM-C618, Class F, except loss of ignition shall not exceed 3.0 percent.

CURING COMPOUND shall meet the requirements of ASTM-C309, Type 2, Class A or B or as otherwise required in Section 9.

MASONRY COMPONENTS shall meet the requirements of ASTM-C90 & C270 and placed in accordance with ACI-530.

PRECAST CONCRETE units shall comply with ACI-525 and 533.

PREFORMED EXPANSION JOINT FILLER shall conform to the requirements of ASTM- D1752, Type I, II, or III, unless bituminous type is specified, in which case it shall conform to ASTM-D994 or D1751.

JOINT SEALERS shall conform to the requirements for ASTM-C920, Federal Specification SS-S-210A, or Federal Specification TT-S-227, as appropriate for the specific application. WATERSTOPS. Vinyl-chloride polymer types shall be tested in accordance with Federal Test Method Standard No. 601 and shall show no sign of web failure due to brittleness at a temperature of -35 degrees Fahrenheit. Colloidal (bentonite) waterstops shall be at least 75 percent bentonite in accordance with Federal Specification SS- S-210A. Non-colloidal waterstops shall only be used if approved by the Engineer.

METALS shall conform to the following standards:
- Structural steel - ASTM-A36
- Carbon steel - ASTM-A283, grade C or D; or A611, grade D; or A570, grade C or D
- Aluminum alloy - ASTM-B308, B429, B221, B210, B211, or B209
- Bolts - ASTM-A307; zinc coating shall conform to ASTM-A153, B633 (cond. SC3), A165 (type TS).
- Screws - wrought iron or medium steel Split or tooth-ring connectors - hot-rolled, low carbon steel conforming to ASTM- A711, grade 1015

WOOD shall be graded and stamped by an agency accredited by the American Lumber Standards Committee as meeting the required species, grade, and moisture content. In the absence of such a stamp, the Contractor or material supplier shall provide written certification that the wood products meet the designated quality criteria.

MANUFACTURED TRUSSES shall be certified as having been designed and built to Truss Plate Institute standards.

PRESSURE TREATED WOOD PRODUCTS shall be Douglas Fir, Southern Yellow Pine, or as otherwise specified on the drawings or in Section 9. They shall be treated with preservatives in accordance with the American Wood Preservers Association (AWPA) Standard C16, “Wood Used on Farms, Pressure Treatment.” Each piece shall bear the AWPA stamp of quality. In the absence of such a stamp, the Contractor or material supplier shall provide written certification that the pressure treated wood meets the designated quality criteria.

FASTENERS for wood structures shall be stainless steel, galvanized, or otherwise protected from corrosion due to contact with moisture, manure and associated gasses.

3. FOUNDATION PREPARATION AND CONDITIONS

All trees, brush, fences, and rubbish shall be cleared within the area of the structure, including any appurtenances, and borrow areas. All material removed by clearing and excavation operations shall be disposed of as directed by the Owner or his/her Representative. Sufficient topsoil shall be stockpiled in a convenient location for spreading on disturbed areas.
All structures shall be set on undisturbed soil or non-yielding compacted material. Over excavation must be corrected as noted on the drawings or as directed by the Engineer or his/her designated Representative.

In addition to uniformity, the existing subgrade material must have sufficient strength to support the structure and its associated loads. Organic soils shall be removed. A base course (a layer of granular material placed on the subgrade prior to placement of concrete) may be used to improve the stability of the foundation. In addition, geosynthetics may be used, if approved by the Engineer, to further separate and/or stabilize the foundation.

Surface and subsurface drainage systems shall be installed and operating adequately to

remove water from the foundation to allow for proper structure placement.

Drainfill upon which concrete is to be placed shall be covered with a geosynthetic that has an AOS between 20 and 100, inclusive.

Concrete shall not be placed until the subgrade, forms and steel reinforcements have been inspected and approved by the Engineer or his/her designated Representative. Notification shall be given far enough in advance to provide time for the inspection.

Prior to placement of concrete, the forms and subgrade shall be free of chips, sawdust, debris, standing water, ice, snow, extraneous oil, mortar or other harmful substances or coatings.

Earth surfaces against which concrete is to be placed shall be firm and damp.
Placement of concrete on mud, dried earth or uncompacted fill or frozen subgrade will not be permitted.

4. CAST-IN-PLACE CONCRETE STRUCTURES

a. Concrete Forms
Forms shall be of wood, plywood, steel, or other approved material and shall be mortar tight. The forms and associated falsework shall be substantial and unyielding and shall be constructed so that the finished concrete will conform to the specified dimensions and contours.

Form surfaces shall be smooth and essentially free of holes, dents, sags, or other irregularities.
Forms shall be coated with form oil before being set into place.
Care shall be taken to prevent form oil from coming in contact with steel reinforcement.

b. Concrete Mix
Concrete for structures shall have a 28-day compressive strength of at least 4000 psi, unless otherwise specified on the drawings or in Section 9. The Contractor shall be responsible for the design of the mix and certification of the necessary compressive strength. Current certification of the design mix by Penn DOT may be accepted in lieu of additional testing.

The slump shall be 3 to 6 inches (without superplasticizers, if any); the air content by volume shall be five to seven percent of the volume of the concrete. Admixtures such as superplasticizers, water-reducers and set-retarders may be used provided they are approved by the Engineer prior to concrete placement and are used in accordance with the manufacturer's recommendations. Superplasticizers (ASTM C494, Type F or G) may be added to concrete that has a 2 to 4-inch slump before the addition, and that is not warmer than 95° F. The slump shall not exceed 7½ inches with the addition of superplasticizer.

c. Mixing and Handling Concrete
In general, concrete shall be transported, placed, and consolidated in accordance with ACI-304, of which some specific interpretations are set forth below.

The supplier shall provide a batch ticket to the Owner or Technician with each load of concrete delivered to the site. The batch ticket shall state the class of concrete, any admixtures used, time out, and the amount of water that can be added at the site and still be within the design mix limits.

Concrete shall be uniform and thoroughly mixed when delivered to the job site. The Contractor

shall test slump and air entrainment as necessary to insure that the concrete meets the requirements of this specification. Variations in slump of more than one inch within a batch will be considered evidence of inadequate mixing and shall be corrected or rejected. No water in excess of the amount called for by the job design mix shall be added to the concrete.

For concrete mixed at the site, the mixing time after all cement, aggregates and water are in the mixer drum shall be at least 1-1/2 minutes.

Concrete shall be conveyed from the mixer to the forms as rapidly as practical by methods that will prevent segregation of the aggregates or loss of mortar. Concrete shall be placed in the forms within 1-1/2 hours after the introduction of cement to the aggregate unless an approved set-retarding admixture is used in the mix. In hot weather or under conditions contributing to quick stiffening of the concrete, or when temperatures of the concrete is 85ºF or above, the time between the introduction of the cement to the aggregates and completion of truck discharge shall not exceed 45 minutes.

Concrete shall not be dropped more than 5 feet vertically unless special equipment is used to prevent segregation.

Superplasticized concrete shall not be dropped more than 12 feet unless special equipment is used to prevent segregation.

Slab concrete shall be placed at the design thickness in one layer. Formed walls shall be placed in layers not more than 24-inches high, unless superplasticizer is used, in which case the maximum layer shall be 5 feet. Each layer shall be consolidated to insure a good bond with the preceding layer.

Immediately after placement, concrete shall be consolidated by spading and vibrating, or by spading and hand tamping. It shall be worked into corners and angles of the forms and around all reinforcement and embedded items in a manner that prevents segregation or in the formation of "honeycomb." Excessive vibration that results in segregation of materials will not be allowed. Vibration must not be used to make concrete flow in forms, slabs, or conveying equipment.

If the surface of a layer in place will develop its initial set, i.e., will not flow and merge with the succeeding layer when vibrated, a construction joint shall be made.
Construction joints shall be made by cleaning the hardened concrete surface to exposed aggregate by sandblasting, air/water jetting, or hand scrubbing with wire brush, and keeping the concrete surface moist for at least one hour prior to placement of new concrete.

Concrete surfaces do not require extensive finishing work; however, the surface shall be smooth and even with concrete paste worked to the surface to fill all voids. The concrete surface must be watertight. Careful screeding (striking-off) and/or wood float finishing shall be required, unless otherwise shown on the drawings. Exposed edges shall be chamfered, either with form molding or molding tools.

The addition of dry cement or water to the surface of screeded concrete to expedite finishing is not allowed.

d. Reinforcing Steel Placement
Reinforcement shall be accurately placed and secured in position in a manner that will prevent its displacement during the placement of concrete. In forms, this shall be accomplished by tying temperature and shrinkage steel or special tie bars (not stress steel) to the form "snap ties" or

by other methods of tying. In slabs, steel or wire shall be supported by precast concrete bricks (not clay bricks), or metal or plastic chairs. Concrete bricks supporting steel and wire must be full and not broken (unless bricks are manufactured with creases or indentations meant to be broken). Except for dowel rods, placing steel reinforcement into concrete already in place shall not be permitted.

The following tolerances will be allowed in the placement of reinforcing bars shown on the drawings:

(1) Maximum reduction in cover:
from formed and exposed surfaces – ¼ inch from earth surfaces - ½ inch
(2) Maximum variation from indicated spacing:
1/12th of indicated spacing

Splices of reinforcing bars shall be made only at the locations shown on the drawings, unless otherwise approved by the Engineer. Unless otherwise required, welded wire fabric shall be spliced by overlapping sections at least one full mesh dimension plus two inches. All reinforcement splices shall be in accordance with ACI 318.

Reinforcing steel shall not be welded, unless approved by the Designer. The ends of all reinforcing steel shall be covered with at least 1-1/2 inches of concrete.

e. Curing

Concrete shall be prevented from drying for at least seven days after it is placed.
Exposed surfaces shall be kept continuously moist during this period by covering with moistened canvas, burlap, straw, sand or other approved material unless they are sprayed with a curing compound. Wooden forms left in place during the curing period shall be kept wet.

Concrete, except at construction joints, may be coated with a curing compound in lieu of continuous application of moisture. The compound shall be sprayed on moist concrete surfaces as soon as free water has disappeared but shall not be applied to any surface until patching, repairs and finishing of that surface are completed.
Concrete shall be wet cured or remain in forms until immediately before patching, repairs, or finishing is performed. Curing compound shall not be allowed on any rebars.

Curing compound shall be applied in a uniform layer over all surfaces requiring protection at a rate of not less than one gallon per 150 square feet of surface.
Surfaces subjected to heavy rainfall or running water within three hours after the curing compound has been applied, or otherwise damaged, shall be resprayed.

Any construction activity which disturbs the curing material shall be avoided during the curing period. If the curing material is subsequently disturbed, it shall be reapplied immediately.

Steel tying or form construction adjacent to new concrete shall not be started until the concrete has cured at least 24 hours.
Vehicles, overlying structures, or other heavy loads shall not be placed on new concrete slabs for at least three days, unless the concrete strength can be shown to be adequate to support such loads.

f. Form Removal and Concrete Repair

Forms for walls and columns shall not be removed for at least 24 hours after placing the concrete. When forms are removed in less than seven days, the exposed concrete shall be sprayed with a curing compound or be kept wet continuously for the remainder of the curing

period. Forms which support beams or covers shall not be removed for at least seven days, or 14 days if they are to support forms or shoring.

Forms shall be removed in such a way as to prevent damage to the concrete. Forms shall be removed before walls are backfilled. Columns shall be at least seven days old before any structural loads are applied.

Where minor areas of the concrete surface are "honeycombed," damaged or otherwise defective, the area shall be cleaned, wetted and then filled with a dry-pack mortar. Dry-pack mortar shall consist of one-part Portland cement and three parts sand with just enough water to produce a workable paste.

g. Concreting in Cold Weather Concreting in cold weather shall be performed in accordance with ACI-306R-16. In addition, the contractor shall provide a written plan at least 24 hours in advance of placing concrete in cold weather and shall have the necessary equipment and materials on the job site before the placement begins.

h. Concreting in Hot Weather
Concreting in hot weather shall be performed in accordance with ACI 305, of which some specific interpretations are set forth below.

The supplier shall apply effective means to maintain the temperature of concrete below 90 degrees Fahrenheit during mixing and conveying. Exposed surfaces shall be continuously moistened by means of fog spray or otherwise protected from drying during the time between placement and finishing and during curing. Concrete with a temperature above 90 degrees Fahrenheit shall not be placed.

i. Backfilling New Concrete Walls
Backfilling and compaction of fill adjacent to new concrete walls shall not begin in less than 14 days after placement of the concrete, except that walls that can be backfilled on both sides simultaneously may be done so within seven days.

Heavy equipment shall not be allowed within three feet of a new concrete wall. Provide compaction near the wall by means of hand tamping or small, manually-directed equipment.

5. WOOD STRUCTURES

All framing shall be true and exact. Timber and lumber shall be accurately cut and assembled to a close fit and shall have even bearing over the entire contact surfaces.
Nails and spikes shall be driven with just sufficient force to set the heads flush with the wood surface. Deep hammer marks in the wood shall be considered evidence of poor workmanship and may be sufficient cause for rejection of the work.

Holes for lag screws shall be bored with a bit not larger than the body of the screw at the base of the thread. Holes for bolts shall be bored with a bit no more than 1/16” larger than the bolt diameter to achieve a snug fit without forcibly driving the bolt.

Washers shall be used in contact with all bolt heads and nuts that would otherwise be in contact with wood.

All joints shall be fastened with the number, type, and size of fasteners specified, at the locations or spacing specified.

If field cuts of pressure-treated wood expose untreated interior wood, the untreated surfaces shall be covered with two coats of a liquid preservative, as approved by the Engineer.

Roof trusses shall be handled, installed and braced according to the Truss Plate Institute's BCSI-B1-06, "Handling, Installing and Bracing MPC Wood Trusses."

Wood structures shall be backfilled within the limits shown on the drawings by placing material in uniform lifts not to exceed nine inches. Compaction within three feet of walls shall be accomplished by means of hand tamping or small manually-directed equipment.

6. STRUCTURES INSTALLED ACCORDING TO STANDARD DETAIL DRAWINGS PREPARED BY OTHERS

Commercially available structures shall be installed as shown on the drawings provided to and concurred in by NRCS. All materials furnished and installed shall conform to the quality and grade noted on the drawings. A site-specific set of construction drawings shall be at the site during construction.

Modification of the structure outside limits shown on the drawings shall not be made without prior review and approval by the Engineer with appropriate approval authority. The Supplier or Contractor who submitted the original standard detail drawings shall be responsible for making any changes. Sufficient design documentation to allow an adequate review of the proposed modification shall accompany any request for a change.

Within thirty (30) days of the completion of construction of the structure, the Contractor or Supplier shall furnish written certification to the Engineer that all aspects of the installation are in conformance with the requirements of the drawings and specifications.

7. BURIED TANKS

a. Tank Condition

Tanks, whether steel or fiberglass/plastic, shall have sufficient strength to withstand design loads, be watertight, and be protected from corrosion. New tanks shall have a manufacturer's certification to this effect.

Used tanks must be inspected for pitting, corrosion, and cracks that could impair the strength or water tightness. Tanks which originally stored leaded fuels may have tetraethyl lead deposits and scale on the inside. This material should be detached from the tank's interior, pumped out, and disposed of in a manner which will not pollute ground or surface waters. Also, if welding, handling, etc. is done, safety precautions should be taken to avoid ingesting or inhaling the lead or its fumes. (These tanks may have gasoline fumes or vapors in them and may explode from a spark, welding arc or torch.)

A tank that has been bent or dented will not be accepted unless adequate repairs have been made to restore the strength, water tightness, and corrosion protection.
When inlet or outlet pipes or other type of openings are to be cut into one of these tanks, the reduced strength must be considered when the tank is put into use. The Steel Tank Institute's sti-P_3 certification procedure shall be used to evaluate the structural integrity and assure the corrosion protection of steel tanks which have been repaired or modified.

b. Installation

Underground tanks shall be handled and installed according to the manufacturer's

recommended procedures.

At a minimum, all tanks shall be set on a firm earth foundation or a full-length concrete slab covered with six inches of clean sand. The tank shall be surrounded by clean sand or well-tamped earth, free from stones and other debris. The use of saddles or "chock blocks" of any sort interferes with the proper distribution of the backfill loads and shall not be permitted.

The excavation shall be dewatered during installation and backfill operations. The backfill shall be well compacted, particularly under the tank, to provide adequate support.

Tanks shall be covered with a minimum of two feet of earth, or with not less than one foot of earth on which is placed a reinforced concrete slab not less than four inches thick.

Tank installations, which will be subjected to traffic, shall have adequate strength to withstand the anticipated overload. Tanks shall be protected against damage from vehicles passing over them by at least three feet of earth cover or by 18 inches of well- tamped earth plus either eight inches of asphaltic paving or six inches of reinforced concrete. The paving or concrete shall be placed to extend at least one foot horizontally in all directions beyond the outline of the tank.

Tanks shall not be filled or even partially filled during their installation and backfilling.

Unless high ground water levels are not expected, the site shall have a drain system to prevent ground water from flooding around the tank. Where a tank may become buoyant due to a rise in the level of the water table or due to location in an area subjected to flooding, applicable precautions shall be taken to anchor the tank in place or dewater the site.

Openings on all underground tanks must be properly located and maintained in place during backfilling.

8. PIPES

Excavation for pipes shall be made to the grades and lines shown on the drawings or as indicated by construction stakes. Care should be taken not to excavate below the depths specified. Excavation below grade shall be corrected by placing firmly compacted layers of moist earth to provide a good foundation. If rock or boulders are exposed in the bottom of the excavation, they shall be removed to a minimum depth of eight inches below the invert grade of the pipe and any appurtenances and replaced with firmly compacted earth to the specified grade.

Pipes shall be backfilled with horizontal lifts of moist earth not to exceed four inches in thickness, or with other material as specified in Section 9 or in the drawings.

Each lift shall be compacted by hand tampers or other compaction equipment, however at no time shall driven equipment tires or tracks be within two feet of pipes or appurtenances.

All connections between pipes and structure walls and floors shall be water tight and capable of withstanding the expected operating pressures.

9. ADDITIONAL CONDITIONS WHICH APPLY TO THIS PROJECT ARE:

Appendix B
PA606 Subsurface Drain

CONSERVATION PRACTICE STANDARD

SUBSURFACE DRAIN

(Ft.)

CODE 606

DEFINITION

A conduit installed beneath the ground surface to collect and/or convey excess water.

PURPOSE

This practice may be applied as part of a resource management system to achieve one or more of the following purposes:

- Remove or distribute excessive soil water.
- Remove salts and other contaminants from the soil profile.

CONDITIONS WHERE PRACTICE APPLIES

This standard applies to agricultural land where a shallow water table exists and where a subsurface drainage system can mitigate the following adverse conditions caused by excessive soil moisture:

- Poor health, vigor and productivity of plants.
- Poor field trafficability.
- Accumulation of salts in the root zone.
- Health risk and livestock stress due to pests such as flukes, flies, or mosquitoes.
- Wet soil conditions around farmsteads, structures, and roadways.

This standard also applies where collected excess water can be distributed through a subsurface water utilization or treatment area.

CRITERIA

Laws and regulations. All federal, state, and local laws, rules, ordinances and regulations governing wetlands, water quality and safety shall be strictly adhered to. In addition, USDA farm programs may further restrict participants in altering or draining wetlands. The Owner or Operator shall be responsible for securing all required permits and for complying with such laws and regulations. The only exceptions are noted below.

The Project Designer is responsible for contacting the Pennsylvania One Call system for utility notification. All positive responses should be noted on the drawings. It is the Contractor's or Landowner's responsibility to contact the affected utilities at the time of construction.

Accidents from the collapse of trenches are a serious problem in the construction industry. The Occupational Health and Safety Administration (OSHA) are responsible for policing the construction industry. OSHA publishes a manual (Part 1926, subpart P) on construction safety.

Capacity. Design capacity shall be based on the following, as applicable:

- Application of a locally proven drainage coefficient for the acreage drained, including added capacity required to dispose of surface water entering through inlets.
- Yield of groundwater based on the expected deep percolation of irrigation water from the overlying fields, including the leaching requirement.
- Comparison of the site with other similar sites where subsurface drain yields have been measured.
- Measurement of the rate of subsurface flow at the site during a period of adverse weather and groundwater conditions.
- Application of Darcy's law to lateral or artesian subsurface flow.
- Contributions from surface inlets based on hydrologic analysis or flow measurements

Size. The size of subsurface drains shall be computed by applying Manning's formula, using roughness coefficients recommended by the manufacturer of the conduit. The size shall be based on the maximum design flow rate and computed using one of the following assumptions:

- The hydraulic grade line parallel to the bottom grade of the subsurface drain with the conduit flowing full at design flow (normal condition, no internal pressure).
- Conduit flowing partly full where a steep grade or other conditions require excess capacity.
- Conduit flowing under internal pressure with hydraulic grade line set by site conditions, which differs from the bottom grade of the subsurface drain.

All subsurface drains shall have a nominal diameter that equals or exceeds 3 inches.

Internal Hydraulic Pressure. Drains are normally designed to flow with no internal pressure, and the flow is normally classified as open channel. The design internal pressure of drains shall not exceed the limits recommended by the manufacturer of the conduit.

Horizontal Alignment. A change in horizontal direction of the subsurface drain shall be made by one of the following methods:

- The use of manufactured fittings.
- The use of junction boxes or manholes.
- A gradual curve of the drain trench on a radius that can be followed by the trenching machine while maintaining grade.

Location, Depth, and Spacing. The location, depth, and spacing of the subsurface drain shall be based on site conditions including soils, topography, groundwater conditions, crops, land use, outlets, saline or sodic conditions, and proximity to wetlands.

The minimum depth of cover over subsurface drains may exclude sections of conduit near the outlet or through minor depressions, providing these sections of conduit are not subject to damage by frost action or equipment travel.

In mineral soils, the minimum depth of cover over subsurface drains shall be 2.0 feet.

In organic soils, the minimum depth of cover after initial subsidence shall be 3.0 feet. If water control structures are installed and managed to limit oxidation and subsidence of the soil, the minimum depth of cover may be reduced to 2.5 feet.

For flexible conduits, maximum burial depths shall be based on manufacturer's recommendations for the site conditions, or based on a site-specific engineering design consistent with methods in NRCS National Engineering Handbook (NEH), Part 636, Chapter 52, Structural Design of Flexible Conduits.

For computation of maximum allowable loads on subsurface drains of all materials, use the trench and bedding conditions specified, and the compressive strength of the conduit. The design load on the conduit shall be based on a combination of equipment loads, trench loads, and road traffic, as applicable.

Equipment loads shall be based on the maximum expected wheel loads for the equipment to be used, the minimum height of cover over the conduit, and the trench width. Equipment loads on the conduit may be neglected when the depth of cover exceeds 6 feet. Trench loads shall be based on the type of backfill over the conduit, the width of the trench, and the unit weight of the backfill material.

Minimum Velocity and Grade. In areas where sedimentation is not a hazard, minimum grades shall be based on site conditions and a velocity of not less than 0.5 feet per second. If a sedimentation hazard exits, a velocity of not less than 1.4 feet per second shall be used to establish the minimum grades. Otherwise, provisions shall be made for preventing sedimentation by use of filters or by collecting and periodically removing sediment from installed traps, or by periodically cleaning the lines with high-pressure jetting systems or cleaning solutions.

Maximum Velocity. Design velocities for perforated or open joint pipe shall not exceed those given in Table 1, unless special protective measures are installed. Design velocities with protective measures shall not exceed manufacturer's recommended limits.

Table 1. Maximum Flow Velocities by Soil Texture.

Soil Texture	Velocity, ft./sec.
Sand and sandy loam	3.5
Silt and silt loam	5.0
Silty clay loam	6.0
Clay and clay loam	7.0
Coarse sand or gravel	9.0

Ref: NEH 624, Chapter 4, Subsurface Drainage.

On sites where topographic conditions require drain placement on steep grades and design velocities greater than indicated in Table 1, special measures shall be used to protect the conduit or surrounding soil.

Protective measures for high velocities shall include one or more of the following, as appropriate:

- Enclose continuous perforated pipe or tubing with fabric type filter material or properly graded sand and gravel.
- Use non-perforated continuous conduit or a watertight pipe, and sealed joints.
- Place the conduit in a sand and gravel envelope, or initial backfill with the least erodible soil available.
- Select rigid butt end pipe or tile with straight smooth sections and square ends to obtain tight fitting joints.
- Wrap open joints of the conduit with tar-impregnated paper, burlap, or special fabric-type filter material.
- Install larger diameter drain conduit in the steep area to help assure a hydraulic grade line parallel with the conduit grade.
- Install open air risers for air release or entry at the beginning and downstream end of the high velocity section.

Releases from drainage water management structures shall not cause flow velocities in perforated or open joint drains to exceed allowable velocities in Table 1, unless protective measures are installed.

Thrust Control. Follow pipe manufacturer's recommendations for thrust control or anchoring, where the following conditions exist:

- Axial forces that tend to move the pipe down steep slopes.
- Thrust forces from abrupt changes in pipeline grade or horizontal alignment, which exceed soil bearing strength.
- Reductions in pipe size.

In the absence of manufacturer's data, thrust blocks shall be designed in accordance with NEH, Part 636, Chapter 52, Structural Design of Flexible Conduits.

Outlets. Drainage outlets shall be adequate for the quantity and quality of water to be discharged.

Outlets to surface water shall be designed to operate without submergence under normal conditions.

For discharge to streams or channels, the outlet invert shall be located above the elevation of normal flow and at least 1.0 foot above the channel bottom.

Outlets shall be protected against erosion and undermining of the conduit, entry of tree roots, damaging periods of submergence, and entry of rodents or other animals into the subsurface drain.

A continuous section of pipe without open joints or perforations, and with stiffness necessary to withstand expected loads, shall be used at the outlet end of the drain line. Minimum lengths for the outlet section of conduit are provided in Table 2. Single-wall Corrugated Plastic Pipe is not suitable for the section that outlets into a ditch or channel.

Table 2. Minimum Length of Outlet Pipe Sections.

Pipe Diameter, in.	Min. Section Length, ft.
8 and smaller	10
10 to 12	12
15 to 18	16
Larger than 18	20

For outlets into sumps, the discharge elevation shall be located above the elevation at which pumping is initiated.

The use and installation of outlet pipe shall conform to the following requirements:

- If burning vegetation on the outlet ditch bank is likely to create a fire hazard, the material from which the pipe is fabricated must be fireproof.
- At least two-thirds of the pipe section shall be buried in the ditch bank, and the cantilever section must extend to the toe of the ditch side slope, or the side slope shall be protected from erosion.
- If ice or floating debris may damage the outlet pipe, the outlet shall be recessed to the extent that the cantilevered part of the pipe will be protected from the current of flow in the ditch or channel.
- Headwalls used for subsurface drain outlets must be adequate in strength and design to avoid washouts and other failures.

Protection from Biological and Mineral Clogging. Drains in certain soils are subject to clogging of drain perforations by bacterial action in association with ferrous iron, manganese, or sulfides. Iron ochre can clog drain openings and can seal manufactured (fabric) filters. Manganese deposits and sulfides can clog drain openings.

Where bacterial activity is expected to lead to clogging of drains, access points for cleaning the drain lines shall be provided.

Where possible, outlet individual drains to an open ditch to isolate localized areas of contamination and to limit the translocation of contamination throughout the system.

Protection from Root Clogging. Problems may occur where drains are in close proximity to perennial vegetation. Drain clogging may result from root penetration by water-loving trees, such as willow, cottonwood, elm, soft maple, some shrubs, grasses, and deep-rooted perennial crops growing near subsurface drains.

The following steps may reduce the incidence of root intrusion:

- Install a continuous section of non-perforated pipe or tubing with sealed joints, through the root zone.
- Remove water-loving trees for a distance of at least 100 feet on each side of the drain, and locate drains a distance of 50 feet or more from non-crop tree species.
- Provide for intermittent submergence of the drain to limit rooting depth by installing a structure for water control (e.g. an inline weir with adjustable crest) that allows for raising the elevation of the drain outlet.

Water Quality. Septic systems shall not be directly connected to the subsurface drainage system, nor shall animal waste be directly introduced into the subsurface drainage system.

Materials. Subsurface drains include flexible conduits of plastic, bituminized fiber, or metal; rigid conduits of vitrified clay or concrete; or other materials of acceptable quality.

The conduit shall meet strength and durability requirements for the site. All conduits shall meet or exceed the minimum requirements of the appropriate specifications published by the American Society for Testing and Materials (ASTM), American Association of State Highway Transportation Officials (AASHTO), or the American Water Works Association (AWWA).

Foundation. If soft or yielding foundations are encountered, the conduits shall be stabilized and protected from settlement. The following methods are acceptable for the stabilization of yielding foundations:

- Remove the unstable material and provide a stable bedding of granular envelope or filter material.
- Provide continuous cradle support for the conduit through the unstable section.
- Bridge unstable areas using long sections of conduit having adequate strength and stiffness to ensure satisfactory subsurface drain performance.
- Place conduit on a flat, treated plank. This method shall not be used for flexible (e.g. Corrugated Plastic Pipe) without proper bedding between the plank and conduit.

Filters and Filter Material. Filters shall be used around conduits, as needed, to prevent movement of the surrounding soil material into the conduit. The need for a filter shall be determined by the characteristics of the

surrounding soil material, site conditions, and the velocity of flow in the conduit. A suitable filter shall be used if any of the following conditions exist:

- Local experience with soil site conditions indicates a need.
- Soil materials surrounding the conduit are dispersed clays, silts with a Plasticity Index less than 7, or fine sands with a Plasticity Index less than 7.
- The soil is subject cracking by desiccation.
- The method of installation may result in inadequate consolidation between the conduit and backfill material.

If a sand-gravel filter is specified, the filter gradation shall be designed in accordance with NEH, Part 633, Chapter 26, Gradation Design of Sand and Gravel Filters.

Specified filter material must completely encase the conduit such that all openings are covered with at least 3 inches of filter material, except where the top of the conduit and side filter material are be covered by a sheet of plastic or similar impervious material to reduce the quantity of filter material required. In all cases, the resulting flow pattern through filter material shall be a minimum of 3 inches in length.

Geotextile filter materials may be used, provided that the effective opening size, strength, durability, and permeability are adequate to prevent soil movement into the drain throughout the expected life of the system. Geotextile filter material shall not be used where the silt content of the soil exceeds 40 percent.

Envelopes and Envelope Material. Envelopes shall be used around subsurface drains if needed for proper conduit bedding or to improve flow characteristics into the conduit.

Materials used for envelopes do not need to meet the gradation requirements of filters, but they must not contain materials that will cause an accumulation of sediment in the conduit, or materials that will render the envelope unsuitable for bedding of the conduit.

Envelope materials shall consist of sand-gravel, organic, or similar material. 100 percent of sand-gravel envelope materials shall all pass a 1.5-inch sieve; not more than 30 percent shall pass a Number 60 sieve; and not more than 5 percent shall pass the Number 200 sieve.

Organic or other compressible envelope materials shall not be used below the centerline of flexible conduits. All organic or other compressible materials shall be of a type that will not readily decompose.

Placement and Bedding. Placement and bedding requirements apply to both excavation trenching and plow type installations.

Place the conduit on a firm foundation to ensure proper alignment. Prevent runoff and surface water from entering the trench.

Conduits shall not be placed on exposed rock, or on stones greater than 1½ inches for conduits 6 inches or larger in diameter, or on stones greater than ¾ inch for conduit less than 6 inches in diameter. Where site conditions do not meet this requirement, the trench must be over-excavated a minimum of 6 inches and refilled to grade with a suitable bedding material.

If installation will be below a water table or where unstable soils are present, special equipment, installation procedures, or bedding materials may be needed. These special requirements may also be necessary to prevent soil movement into the drain or plugging of the envelope, if installation will be made in materials such as soil slurries.

For the installation of Corrugated Plastic Pipe with diameters of 8 inches or less, one of the following bedding methods shall be specified:

- A shaped groove providing an angle of support of 90 degrees or greater shall be provided in the bottom of the trench for tubing support and alignment.
- A sand-gravel envelope, at least 3 inches thick, to provide support.
- Compacted bedding material beside and to 3 inches above the conduit.

For the installation of Corrugated Plastic Pipe with diameters larger than 8 inches, the same bedding requirements shall be met except that a semi-circular or trapezoidal groove shaped to fit the conduit with a support angle of 120 degrees will be used rather than a V-shaped groove.

For rigid conduits installed in a trench, the same requirements shall be met except that a groove or notch is not required. For trench installations where a sand-gravel or compacted bedding is not specified, the initial backfill for the conduit shall be selected material containing no hard objects (e.g. rocks or consolidated chunks of soil) larger than 1.5 inches in diameter. Initial backfill shall be carried to a minimum of 3 inches above the conduit.

All trench installations should be made when the soil profile is in its driest possible condition in order to minimize problems of trench stability, conduit alignment, and soil movement into the drain.

All installations shall meet the minimum requirements of the appropriate ASTM specification.

Auxiliary Structures and Protection. The capacity of any structure installed in the drain line shall be no less than that of the line or lines feeding into or through them.

Structures for water table management, with provisions to elevate the outlet and allow submergence of the upstream drain, shall meet applicable design criteria in NRCS Conservation Practice Standards, Structure for Water Control (PA587), and Drainage Water Management (PA554).

If the drain system is to include underground outlets, the capacity of the surface water inlet shall not be greater than the maximum design flow in the downstream drain line or lines. Covers or trash racks shall be used to ensure that no foreign materials are allowed in the drain lines. Inlets shall be protected from entry of animals or debris. If sediment may pose a problem, sediment traps shall be installed.

The capacity of a relief well system shall be based on the flow from the aquifer, the well spacing, and other site conditions, and shall be adequate to lower the artesian water head to the desired level. Relief wells shall not be less than 4 inches in diameter.

Junction boxes, manholes, catch basins, and sand traps must be accessible for maintenance. A clear opening of not less than 2.0 feet will be provided in either circular or rectangular structures.

The drain system shall be protected against turbulence created near outlets, surface inlets or similar structures. Continuous non-perforated or closed-joint pipe shall be used in drain lines adjoining the structure where excessive velocities will occur.

Junction boxes shall be installed where three or more lines join or if two lines join at different elevations. If the junction box is buried, a solid cover should be used, and the junction box should have a minimum of 1.5 feet of soil cover. Buried boxes shall be protected from traffic.

If not connected to a structure, the upper end of each subsurface drain line will be closed with a tight-fitting cap or plug of the same material as the conduit, or other durable materials.

Watertight conduits designed to withstand the expected loads shall be used where subsurface drains cross under irrigation canals, ditches, or other structures.

CONSIDERATIONS

When planning, designing, and installing this practice, the following items should be considered:

- Protection of shallow drains, auxiliary structures, and outlets from damage due to freezing and thawing.
- Proper surface drainage to reduce the required intensity of the subsurface drainage system.
- Designs that incorporate drainage water management practices (or facilitate its future incorporation) to reduce nutrient loading of receiving waters.
- Drainage laterals oriented along elevation contours to improve the effectiveness of drainage water management structures.
- The effects of drainage systems on runoff volume, seepage, and the availability of soil water needed for plant growth.
- Confirmation of soil survey information with site investigation, including auguring and shallow excavations to identify soil profile hydraulic characteristics, soil texture layering, water table depth, etc.

- The effects of drainage systems on the hydrology of adjacent lands.
- Subsoiling or ripping of soils with contrasting texture layers to improve internal drainage.
- Installations in dry soil profile to minimize problems of trench stability, conduit alignment, and soil movement into the drain.
- The effects to surface water quality. Care should be taken, however, to insure that pollutants do not enter the drain directly to the emptied into surface waters.
- Use of temporary flow blocking devices to reduce risk of drain water contamination from surface applications of manure.

PLANS AND SPECIFICATIONS

Plans and specifications for installing subsurface drains shall be in keeping with this standard and shall describe the requirements for applying the practice to achieve its intended purpose.

At a minimum, plans specifications shall include, as applicable:

- location of drainage system;
- wetland delineation(s);
- conduit lengths, grades, sizes, and type of materials;
- structure locations, dimensions, and elevations;
- outlet locations, elevations, and protection required; and
- normal water level elevations in outlet ditches or streams.

OPERATION AND MAINTENANCE

The Operation and Maintenance (O&M) Plan shall provide specific instructions for operating and maintaining the system to insure proper function as designed. At a minimum, the O&M Plan shall address:

- Necessary periodic inspection and prompt repair of system components (e.g. structures for water control, underground outlets, vents, drain outlets, trash and rodent guards).
- Winterization protection from freezing conditions for drainage systems in cold climates.

REFERENCES

USDA-NRCS, National Engineering Handbook, Part 624, Chapter 4, Subsurface Drainage.

USDA-NRCS, National Engineering Handbook, Part 633, Chapter 26, Gradation Design of Sand and Gravel Filters.

USDA-NRCS, National Engineering Handbook, Part 636, Chapter 52, Structural Design of Flexible Conduits.

CONSTRUCTION SPECIFICATION

606. SUBSURFACE DRAIN

1. SCOPE

The work shall consist of furnishing materials and installing all components of the subsurface drain as outlined in the specification and the drawings.

2. MATERIALS

a. DRAINFILL AGGREGATE shall meet the requirements of Penn DOT, Publication 408, Section 703, fine and coarse aggregate. The size and gradation shall be as specified in the additional conditions of this specification or on the drawings.

b. PIPE shall meet the requirements of Table 1, and as set forth in Section 9 and/or on the drawings. All pipes shall be clearly marked with the appropriate specification designation. If plastic pipe is stored on site for a length of time, it should be protected from sunlight. At the time of installation, it should be kept as cool as possible to minimize elongation of the pipe during installation.

c. GEOTEXTILE shall meet the requirements as outlined in PennDOT Publication 408, Section 735, Class 1, Subsurface Drainage.

Table 1 – Drain pipe requirements

Type	Specification
Clay drain tile, solid & perforated	ASTM-C-4
Clay pipe, perforated, standard and extra strength	ASTM-C-700
Clay pipe testing	ASTM-C-301
Concrete drain tile	ASTM-C-412
Concrete pipe for irrigation or drainage	ASTM-C-118
Concrete pipe or tile, determining physical properties of	ASTM-C-497
Concrete sewer, storm drain and culvert pipe	ASTM-C-14
Reinforced concrete culvert, storm drain and sewer pipe	ASTM-C-76
Perforated concrete pipe	ASTM-C-444
Portland cement	ASTM-C-150
Pipe, bituminized fiber & fitting	Federal Specification SS-P-1540
Styrene rubber (SR) plastic drain pipe & fitting	ASTM-D-2852
Polyvinyl chloride (PVC) sewer pipe & fitting	ASTM-D-2729
Polyvinyl chloride (PVC) pipe	ASTM-D-3034 type PSM
Corrugated polyethylene tubing & fitting (3-6 inch)	ASTM-F-405
Corrugated polyethylene tubing & fitting (8-24 inch)	ASTM-F-667
Pipe, corrugated (steel, polymer coated)	ASTM-A-762
Pipe, corrugated (steel, zinc coated)	ASTM-A-760

3. SITE PREPERATION

All trees, brush, fences and rubbish shall be cleared within the area that the subsurface drain will be installed. All material removed by the clearing and grubbing operation shall be disposed of as directed by the Owner or his/her Representative.

4. INSPECTION AND MATERIAL HANDLING

Material for subsurface drains shall be carefully inspected before the drains are installed. If applicable, clay and concrete tile shall be checked for damage from freezing and thawing before it is installed. Bituminized fiber and plastic pipe and tubing shall be protected from hazard causing deformation or warping. Plastic pipe and tubing with physical imperfections shall not be installed. Any damaged section shall be removed and replaced. All material shall be satisfactory for its intended use and shall meet applicable specifications and requirements.

5. SAFETY

All positive “design” responses from the Pennsylvania One Call System are noted on the plans. It is the Contractor’s or Landowner’s responsibility to notify One Call of pending construction and to contact the affected utility for marking at the time of construction.

The Contractor must comply with OSHA requirements Part 1926, subpart P, for protection of workers entering trench.

6. INSTALLATION

Flexible conduits, such as plastic pipe or tubing and bituminized fiber pipe, shall be installed, according to the requirements in ASTM-F-449, “Standard Recommended Practice for Subsurface Installation of Corrugated Thermoplastic Tubing for Agricultural Drainage or Water Table Control.”

All subsurface drains shall be laid to line and grade and covered with approved blinding, envelope or filter material to a depth of not less than three inches over the top of the pipe. If an impervious sheet is used over the drain, at least three inches of blinding material must cover the sheet. No reversals in grade of the conduit shall be permitted.

If the conduit is to be laid in a rock trench or if rock is exposed at the bottom of the trench, the rock shall be removed below grade so that the trench can be backfilled, compacted and bedded. When completed, the tile conduit shall be not less than two inches from the rock.

Joints between drain tiles shall not exceed 1/8 inch except in sandy soils where the closest possible fit must be obtained and in organic soil where some of the more fibrous soil types make it desirable to slightly increase the space between tiles.

Earth backfill material shall be placed in the trench in a manner to ensure that the conduit does not become displaced and so that the filter and bedding material, after backfilling, meet the requirements of the plans and specifications.

If a filter is needed, no part of the conduit containing openings shall be left exposed. If a sand-gravel filter material is used, it shall be a gradation that is compatible with the base material in the trench. The trench shall be over excavated three inches and backfilled to grade with filter material. After the conduit is placed on the filter material, additional filter material shall be placed over the conduit to fill the trench to a depth of three inches over the conduit.

7. FITTINGS AND CONNECTIONS

All fitting and connections for pipe shall be made with manufacturer-supplied components made for the intended purpose.

8. CONDUIT PERFORATIONS

If perforations are specified, the water inlet area shall be at least 1inch/foot of the pipe length. The perforations shall be either circular or slots equally spaced around the circumference of the pipe in not less than three rows. Circular perforations shall not exceed 3/16 inch in diameter and slots shall not be more than 1/8 inch wide and 1 ¼ inch long for 3, 4 and 5 inch diameter pipe, or 1 ½ inch for 6 and 8 inch diameter pipe, or 1 ¾ inch for 10 and 12 inch diameter pipe. All slots and circular perforations shall be cleanly cut.

SUBSURFACE DRAIN
Operation and Maintenance

GENERAL

A subsurface drainage system properly installed requires little maintenance to keep it operational. Inspection of the drains, especially after heavy rains should be made to see if they are working properly and if maintenance is required.

OUTLETS

The outlet of the system must be kept clean if the maximum benefits from the drain are to be obtained. Sediment and debris sometimes gather over the outlet and may entirely plug the outlet. A good subsurface drainage system may fail because the outlet ditch fills up with silt and vegetation. The outlet ditch should be improved to permit free flow from the drain outlet.

The animal guard should be checked to determine if it is functioning properly and if any debris is present, if debris is found it shall be removed.

SURFACE-WATER INLETS

Surface water inlets are subject to damage and may require frequent repairs. If holes wash around the inlets, they should be repaired. Any trash which seals over the inlet gratings or trash racks should be removed. Frequent inlet inspection will insure prompt removal of surface water. Catch basins used for surface water should be cleaned periodically to remove sediment build up in the bottom of the basin.

BLOWOUTS

Often holes develop over the tile drains. These holes known as blowouts may be caused in construction by crushing of the conduit or improperly made connections. Blowouts may be caused by insufficient cover and high pressures within the drain. Drains crushed by heavy farm equipment may cause holes which result in the drain filling with the soil. If repairs are not made immediately, damage will increase. To make repairs the drain must be exposed at the point of the blowout and the drain replaced or properly connected.

TREE ROOTS

If trees near the drain are not removed at the time of construction, the drain may become plugged by tree roots. If the drain is not functioning and the outlets is open, the drain should be checked where any trees are located near the drain. To repair the line, dig it up, clean the drain and re-lay it. Unless the trees near the drain are removed or killed, problems will continue. Another way to prevent a recurrence would be to replace the part that is clogged with non-perforated conduit with watertight joints.

WATERWAYS OVER DRAINS

Drains are often laid under or at one side of waterways. Drains laid under the center of the waterways are not recommended because surface water seeps into perforations or joints in the drain and carries soil into the drain. When enough soil is displaced, a large hole develops. Where it has been necessary to place a drain under a waterway, it should be inspected regularly.

MINERAL DEPOSITS

Malfunctioning of drains has been caused by mineral deposits in the drains. Accumulation of insoluble black or red precipitate, mainly manganese or iron oxide may be found in the line. The mineral deposits do not seriously affect the operation of the drain unless the perforations or joints become sealed or the line becomes entirely clogged with precipitates. Indication of the presence of the deposits may be seen at the outlets or at junction boxes and inspection holes. Sulphur dioxide gas injected

into the upper end of the drain from tanks of compressed gas has proven successful in opening the drain. The gas should be held in the line for 24 hours after the air has been replaced by the gas. High pressure hydraulic cleaner are also used to clean the drain. Where these conditions are expected, it is recommended to use a non-limestone bedding material.

MISCELLANEOUS

Inspection wells or catch basins installed in a drainage system or water ponded on the surface may be used to locate the portion or the system which is not operating properly. Examining the drains after heavy flows should give enough information so that the trouble can be located.

Failure of a drain installation to operate as expected may result from other factors such as:

a. Drains installed with insufficient capacity, drains placed too shallow or a lack of auxiliary structures.

b. Drains of insufficient strength or lacking in other qualities necessary for installation.

c. Poor construction resulting in such inadequacies as improper bedding; poor grade and alignment; improper backfilling and substandard connections.

Appendix C
PA634 Waste Transfer

CONSERVATION PRACTICE STANDARD

WASTE TRANSFER

(Each)

CODE 634

DEFINITION

A system using structures, pipes or conduits installed to convey wastes or waste byproducts from the agricultural production site to storage/treatment or application.

PURPOSE

To transfer agricultural waste material associated with production, processing, and harvesting to:

- a storage facility,
- a treatment facility,
- a handling or loading area,
- agricultural land for agronomic application.

CONDITIONS WHERE PRACTICE APPLIES

The waste transfer system is included as an element of the agricultural production area, storage/treatment facility and/or land application areas of the agricultural operation.

The practice applies where it is necessary to transfer waste material generated by livestock production or agricultural product processing from:

- the generation site to the application area,
- the generation site to a storage/treatment facility,
- the storage/treatment facility to land for agronomic application.

This practice does not apply to hauling waste material with equipment or vehicles.

CRITERIA

General Criteria Applicable to All Purposes

Permits. Notify landowner and/or contractor of responsibility to locate all buried utilities in the project area, including drainage tile and other structural measures. The landowner is also required to obtain all necessary permits for project installation prior to construction.

Structures. Structures including concrete pits, tanks, hoppers, manholes, and channels used for waste transfer, prefabricated or cast in place, must meet the criteria in NRCS Conservation Practice Standard *Waste Storage Facility (PA313)* for liquid tightness and structural strength, regardless of materials used for construction. Covers, when needed, shall be designed to support the anticipated dead and live loads.

Design all structures, including those that provide a work area around pumps to withstand the design static and dynamic loading. Design structures to withstand earth and hydrostatic loading as specified for comparable structural criteria in *Waste Storage Facility (PA313)*.

Investigate the subsurface conditions (i.e., depth to bedrock, soil classification, water table, etc.) when locating and designing structures.

Design floor openings with structures that receive manure from alley scrape collection, with a minimum of 9 square feet, having one dimension of that opening 4 feet or larger. Equip floor grate with openings wide enough to pass the waste and engineered to support the anticipated live loads. Provide safety features to prevent accidental entry to the waste reception pit. Grate openings where safety is a concern shall not be more than 6 inches in one direction.

Construct curbs in conjunction with structures that

meet the purpose of this standard and design criteria in *Waste Storage Facility (PA313)*. Design curbs to be anchored to withstand working loads. Construct curbs of either concrete or wood and shall be adequately reinforced and anchored.

Use the *Roofs and Covers (PA367)* to design covers where needed for structures.

Location. Reception pits, hoppers, manure pumps, gravity drop structures, and gravity flow conduits shall be located away from a potable water well, spring or reservoir wherever possible. New livestock facilities shall be set back a minimum of 100 feet from wells or springs where appropriate. All transfer components shall be installed a minimum of one foot above bedrock and the seasonal high water table unless the water table is lowered or the transfer component is designed to withstand the external hydrostatic pressures. The design shall consider the safety of humans and animals during construction and operation. Excavation depths near or under building foundations shall be the minimum required. In locating structures, utilize existing topography to the greatest extent possible to generate head on effluent flow and reduce pumping requirements.

Reception Pits. A reception pit is a temporary storage facility that will store manure for 1 to 28 days. The manure in a reception pit is generally transferred to the storage facility by means of pumps or dosing valves to gravity systems.

Size reception pits (areas established to temporarily accumulate effluent flow) to contain a minimum volume of one full day's waste production where appropriate. For reception pits collecting runoff, the reception pit shall be sized to also contain at least the volume of runoff from the 25-year, 24-hour storm. Additional capacity shall be added as needed for freeboard and emergency storage.

Openings in the top or side of a reception pit shall be sized and designed to accommodate both manure loading and unloading pumps and other systems. Covers, grates and other protective devices shall be installed over reception pit openings and designed to support the anticipated loads. Warning signs shall be posted at the reception pit to indicate the potential dangers of toxic gases.

Gravity Drop Structures. A gravity drop structure is a vertical chute or hopper, which conveys waste into a large diameter transfer pipe. The structure shall be constructed of durable, corrosion-resistant material, and be liquid tight.

Hoppers shall be sized to contain a minimum of one half of a full day's manure or wastewater production unless an alternative design is approved by the design engineer. Additional storage shall be added for heavily bedded manure that may encounter delay in traveling through the pipe. This volume is to be above the maximum effective storage elevation in the waste storage facility. The inlet or loading opening to the drop structure shall be compatible with the scraping and cleaning equipment width and capacity.

A cover shall be provided for the drop structure. Permanent barriers such as gates, fences, etc., may be installed in lieu of a cover if such barriers insure adequate safety for human and animals. Warning signs shall be posted at the drop structure to indicate the potential dangers of toxic gases.

Where slurry or semi-solid manure is transferred in a gravity system a minimum operating head of 2 feet shall be maintained. For heavily bedded dairy manure 4 feet of head is required on the pipe system. When the manure is liquid the minimum head can be 1 foot.

The outlet of the drop structure shall be constructed to minimize the head loss at the inlet of the transfer pipe. The floor of the drop structure shall slope in the direction of the outlet to provide a smooth transition from the drop structure into the conduit.

Fillets to reduce sharp corners and significant losses at the pipe inlet are required.

Gravity outlets from main waste storage facilities shall not be used.

Pipelines/Conduits-General. Design transfer pipeline/conduits in accordance with sound engineering principles, taking into account the waste material properties, management operations, pipe exposure, static and dynamic loads on the pipe, working pressure, transfer system pressure rating, required capacity and all applicable design factors. Pipe pressure rating required may need adjustment based on effluent temperatures and consistency.

Use water tight or sewer grade pipelines and connection devices for waste transfer pipelines. The type of liquid waste material and total solids content will determine the transfer pipe designs to convey the required flow without plugging.

The minimum pipeline/conduit design capacity from collection facilities to a storage/treatment facility is the maximum anticipated peak flow.

Design the pipeline capacity from the storage/treatment facility to the land application area, to empty the facility within the time as outlined in *Nutrient Management (PA590)* or a Comprehensive Nutrient Management Plan (CNMP).

Protect pipes exposed to sunlight from ultraviolet radiation by selecting UV resistant pipe materials or

by painting the pipe exterior to withstand UV damage throughout the intended life of the pipe.

Install pipe properly at all locations to accommodate any traffic crossing, farming operations, frost depth, subsurface saturation, or bedrock elevations. Protect pipe from uplift if subjected to hydrostatic forces. Separate pipe installed near bedrock with at least 6 inches of bedding. Excavation of bedrock is acceptable to provide bedding depth.

Maintain the integrity of a wall or liner at pipe penetrations of waste storage structures, reception tanks, and channels. The section of pipe that penetrates the liner of a waste storage facility surface will have a minimum length of 10 feet and will be supported with a cast-in-place concrete restraint or equal support system as per the design engineer. Provide joint restraints within 25' of the manure storage, where appropriate, considering change in alignments, changes in elevations, waste velocity, and earth fill conditions. Other appropriate means of support shall be provided for pipes penetrating concrete walls.

Protect storage structure liners from hydrostatic pressures that may be caused by preferential flow paths along installed pipe.

If cold weather pipeline operation is planned, design transfer pipe to be: insulated, heated, buried below anticipated frost depth, constructed of freeze resistant material, or installed such that it can be drained after each use by gravity or compressed air. Install pipelines with appropriate backflow prevention devices to prevent return siphoning of waste.

Install air vents and vacuum relief valves where necessary to eliminate air locks, as well as to protect the pipe against negative pressures.

Pipelines-Pressure. Select pipe and appurtenance material that meets the design working pressure criteria of the system which also includes air and water pressures used to clear the pipe.

All pipes shall be designed based on the type of material and total solids content, and shall convey the required flow without plugging. Flow velocities shall be sufficient to minimize settling of solids in the pipeline. Where applicable, in order to minimize settling of solids in the pipeline, design velocities shall be between 3 to 5 feet per second. Pipelines shall be installed with appropriate water tight joints and connection devices to prevent contamination of private or public water supply distribution systems and groundwater.

Fluid velocities in a buried or secured pipelines may exceed 5 feet per second only if the pipeline is installed without gates or valves, and discharges freely to a tank or pond.

The 3 feet per second lower limit does not apply to a system that is powered by a pump such as a ram plunger or piston type pump that operates by pushing semi-solid waste material in a periodic stroke cycle.

The size, type, strength and pressure rating of pipe and fittings shall meet or exceed the pump manufacturer's recommendations or static head conditions. As a safety factor against surge, the working pressure at any point should not exceed 72 percent of the pressure rating of the pipe.

Provide thrust control designed in accordance with National Engineering Handbook (NEH) Part 636, Chapter 52 for all buried pressure pipe 4 inches and larger in diameter and all angled fittings and valves.

Install a check valve near the outlet of each pump except where backflow is incorporated into the design.

Provide a pressure relief valve near the pump(s) to protect the pipe against any pump shut-off head due to a blockage (unless the pump shut-off head is less than the working pressure of the transfer system) where appropriate.

Provide a pressure relief valve or properly sized water hammer arrestor on the pressure side of shut-off valves to protect against water hammer due to the sudden closing of a valve where appropriate.

Size pressure relief valves to be no smaller than ¼-inch for each inch of the pipe diameter. Set pressure relief valves to open at a pressure no greater than 5 psi above the transfer system working pressure.

Valves. In all systems where the top of the reception pit or top of the hopper is below the top of the waste storage facility, manually operated valves shall be installed to prevent the reverse flow of manure through the pipe and pump. At a minimum, a valve shall be located immediately outside the waste storage facility. Also, a second valve shall be required near the pump. This shall be in addition to the check valve normally installed as an integral part of the loading pump and the check valve inside the storage. Valves should be exercised on a regular basis.

Gravity Transfer Pipes. The transfer pipe is a conduit used to transfer manure and liquid waste by gravity from the source to a waste storage facility. The pipe must meet or exceed the requirements of the applicable standard specifications listed in the following table:

	Specification
Polyvinyl Chloride (PVC)	ASTM F 679 ASTM D1785 ASTM D3034 ASTM F794 ASTM D2241, SDR ≤ 32.5
Fiberglass	ASTM D 3754
Polyethylene (PE)	ASTM F894, F2648 ASTM D3035 ASSHTO M252, M294
Polypropylene (PP)	ASTM F2736
Steel	ASTM A53, ASTM A134, ASTM A135, ASTM A139

All gravity pipelines must have watertight couplings for the maximum anticipated head in the pipe.

Where needed, vents shall be installed in gravity lines and the top of vented openings shall be above maximum storage elevations.

All pipes must withstand the static and dynamic loads. Pipes shall have a minimum cover of 3 feet or be otherwise protected where surcharges are anticipated over the pipe. Where the soil cover must be less than 3 feet over the pipe, it shall be insulated or otherwise protected from freezing.

The maximum pipe length for manure with chopped hay or saw dust bedding shall be 150 feet. The length of the pipe can be increased to 200 feet between manholes if water is added to the manure at the inlet of the pipe. Chopped hay or sawdust bedding must be kept to a minimum to avoid plugging of the pipe. Gravity flow pipe systems are not recommended for manure with long hay. Gravity flow systems using sand bedding require extreme design considerations such as elimination of water, extra cleanouts, more drop in pipe outlets and/or pull plug flow systems. Where possible, the gravity pipe shall be installed on five percent slope or flatter. The minimum slope shall be 1 percent.

The maximum slope for a gravity pipeline shall be 15 percent. The maximum grade can be exceeded for liquid manure or short distances not exceeding 25 feet. Abrupt changes in grade or alignment with steep gradient pipes may warrant the use of thrust blocks.

Gravity pipelines shall not have horizontal curves or bends, except minor deflections within the limits of the pipe manufacturer's recommendations, or unless special design considerations are used. Other changes in horizontal directions shall be made in drop structures or manholes.

Clean-out access shall be provided for gravity pipelines at a maximum interval of 200 feet for lines carrying non-bedded manure. For pipelines carrying bedded manure the maximum interval shall be 150 feet unless an alternative design is approved by the design engineer.

The pipe outlet invert elevation shall be within 2 feet of the bottom of a waste storage facility whenever possible. When this is not possible, the design and/or operation and maintenance plan shall address freezing, drying, and odor issues related to prolonged exposure of the pipe outlet. When using sand or there are other settling concerns the elevation shall be higher. Changes in the pipe grade shall be kept to a minimum. In locations where the pipe grade changes, the pipe shall be vented to prevent an air lock. The end section of the pipe shall be sufficiently anchored to prevent movement of the section into the clay or other such lined storage facility. A headwall or dead-man anchors may be required.

For dairy manure, the minimum pipe diameter shall be 24 inches for slurry or semi-solid manure. The smallest diameter for liquid manure shall be 18 inches. The smallest diameter for flush systems shall be 12 inches. Discharge pipes from manure separators shall meet the manufacturer's recommendations.

For swine and veal manure with no bedding, a system to prevent the build-up of solids shall be used. This can be a flush type system or other system that maintains a minimum velocity of 2 fps in the pipeline. The minimum diameter pipe shall be 6 inches for pipe slopes greater than 1.0 percent, and 10 inches for pipe slopes between 0.5 to 1.0 percent.

The minimum pipe diameter for scraper type systems shall be 12 inches.

For wastewater including milk house and parlors, the minimum pipe diameter shall be 4 inches for pipe slopes greater than 1.0 percent and 6 inches for pipe slopes between 0.5 and 1.0 percent. A minimum velocity of 2 fps shall be maintained in the pipeline.

In a gravity flow design that transfers diluted sand laden manure, account for the process of sand settling out of the waste stream. The minimum gravity pipe flow velocity for diluted sand laden manure is 5 feet per second.

Other Conduits. The minimum design velocity for waste transfer in open ditches and channels is 1.5 feet per second.

A reinforced cast-in-place concrete lined ditch or channel for waste transfer will have a minimum concrete thickness of 5 inches.

Concrete used for conduits must be proportioned so that it is plastic enough for thorough consolidation and stiff enough to stay in place. A dense durable product is required.

Contraction joints in a concrete conduit, if required, must be formed transversely to a depth of about one-third the thickness of the lining at a uniform spacing in the range of 8 to 15 feet. Provide steel reinforcement or other uniform support to the joint to prevent unequal settlement.

Gravity Outlet Pipes. The outlet pipe is a conduit used to convey manure from the storage facility to a spreader or other hauling unit for application of manure to the field. Due to the potential hazard and management requirements, gravity outlet pipes shall not be used.

Pumps. Pumps installed for waste transfer shall meet the requirements of *Pumping Plant (PA533)*. Pumps shall be sized to transfer manure at the required system head and volume. Type of pump shall be based on the consistency of the manure, the type of bedding used, and the harsh operating environment. Requirements for pump installation shall be based on manufacturer's recommendations.

Correct the total dynamic head for viscosity and specific gravity of the liquid waste used in pump selection. Reference AWMFH, Chapter 11, Waste Utilization, for increased friction losses caused by higher fluid viscosity and Chapter 12, Waste Management Equipment, for pump selection guidance.

Solid/Liquid Waste Separation. Use *Waste Separation Facility (PA632)* to design a filtration or screening device, settling tank, settling basin, or settling channel to separate a portion of the solids from the manure or liquid waste stream, as needed.

Pump Station. A pump station is a tank, pump and other appurtenance used to collect milk house, and parlor wastewater, or other wastewater, and transfer it to a storage or treatment facility.

The minimum size tank for dairy operations with milking parlors shall be 1000 gallons or as approved by the design engineer. The minimum tank size for pipeline/milk house systems shall be 500 gallons or as approved by the design engineer. Tanks shall be installed in ground below frost elevation. If a tank cannot be installed in ground, other provisions, such as insulation and supplementary heat, shall be provided to prevent freezing in the tank. Provisions shall be made to install tanks above the seasonal high water table or designed to withstand buoyant forces. Existing in- place, septic tanks may be used provided they are sound, intact and meet the size requirements of the operation.

A settling tank shall be used ahead of a pump station where solids will be a concern. The capacity of the settling tank shall be a minimum of 500 gallon and be accessible for cleaning.

Pumps and appurtenances shall be designed or selected in accordance to manufacturer's recommendation. Sump pumps shall only be used for clean water with no solids. Sewage rated transfer pumps or equal (grinder pumps, chopper pumps) shall be used with liquids containing manure solids. Pumps shall be selected based on solids handling capacity and working head. Pumps shall be installed to allow for easy access for maintenance and repair. Transfer pipes shall be installed in ground below frost elevation. If transfer pipe is installed above ground, the pipe shall be installed so the wastewater left in the pipe after the pump shuts off is allowed to drain freely out of the pipe, unless insulated to prevent freezing. Where possible, above ground transfer pipes shall be installed through barns or other buildings. Above ground pipes should not be directly exposed to cold weather. Backflow from pipelines when pumps shut down shall be included in the storage volume of the pump station tank. Pipelines shall drain sufficiently to prevent back siphoning and freezing.

Manure Stacker. The manure stacker is an elevator that transports solid and semi-solid manure and bedding from the barn (e.g. gutter cleaner) to the storage facility. Manure stackers are not designed to handle liquid manure. The stacker shall be installed as recommended by the manufacturer. The discharge end of the manure stacker shall be suspended over the storage facility approximately one-third to one-half the total length of the facility. The support structure for the manure stacker shall be designed and installed in accordance to *Waste Storage Facility (PA313)* and manufacturer's recommendations.

Push-Off Ramp. A push-off ramp allows manure to be loaded directly into the manure storage facility or spreader or hauler by means of front end loader or

other scraping equipment.

Push-off ramps shall be constructed of concrete, masonry, wood, or other durable materials. Push-off ramps shall be design to withstand all anticipated static and dynamic loads in accordance to standard *Waste Storage Facility (PA313).* Gates, fences, barriers, and other devices shall be installed to provide safety to humans and animals. Warning signs shall be posted at the push-off ramp.

Safety. The system design shall address the safety of humans and animals during construction and operation.

Gypsum bedding, silage leachate, and other waste components containing high amounts of sulfur can produce excessive amounts of manure gases. These materials in combination with small reception pits/covered spaces can create dangerous manure gas situations unless the sulfur is restricted, special design techniques used, or safety precautions provided for these waste transfer elements.

Open structures shall be provided with covers or barriers such as gates, fences, etc.

Ventilation shall be provided for enclosed waste transfer systems as necessary.

Fencing components shall meet the requirements of *Fence (PA382).*

Pipelines from enclosed buildings shall be provided with a water-sealed trap and vent or similar devices where necessary to control gas entry into buildings.

Provide warning signs as necessary to warn of the danger of entry and to reduce the risk of confined spaces, agitation hazards, explosion, poisoning, or asphyxiation possible with the waste transfer system.

Identify pipes at risk to being damaged by equipment or livestock by placing fences or markers along the pipeline.

Barriers shall be placed on push-off ramps to prevent equipment, animals, and people from falling into waste collection, storage, or treatment facilities.

Biosecurity. Manure from diseased animals shall be handled in accordance with the state veterinarians' recommendations.

Transfer to Fields. The transfer of manure or wastewater to fields consists of the pumping from the storage facility or reception pit to the field or wastewater treatment strip or constructed wetland.

Irrigation pumps, conduits, sprinklers, and other appurtenances shall be designed, installed, maintained and operated in accordance with standards *Irrigation Pipeline (PA430)*, *Sprinkler System (PA442)*, and *Irrigation Regulating Reservoir (PA552)* as applicable to the planned system. PA430 and PA552 shall be followed in designing a system to convey manure or wastewater to a drag hose field application system. Other components not covered by the PA standards shall be designed, installed, maintained and operated according to manufacturer's recommendation.

Transfer of wastewater to a treatment strip or constructed wetland shall be designed in accordance with this standard and *Vegetated Treatment Area (PA635)* or *Constructed* Wetland *(PA656)*, as applicable.

Additional Criteria for Managing Silage Leachate and Runoff

Use low-flow collection devices, dilution, storage, or other acceptable methods to control fermentation leachate and runoff flow from the feed storage areas.

Follow the PA Design Guide 10, Design Guidelines for Silage Leachate and Runoff.

Refer to the Pennsylvania NRCS conservation practice standards for *Waste Storage Facility (PA313)* and *Storm Water Runoff Control (570)*. For sensitive sites refer to *Vegetated Treatment Area (PA635)*, *Waste Treatment (PA629)*, or a *Constructed Wetland (PA656)* for alternative options.

CONSIDERATIONS

General

Consider economics (including design life), overall manure management system plans, and health and safety factors.

Consider the timing and location of agitation and transfer activities to minimize odor formation and transport and to minimize the breeding of insects within the material.

When sand/lime is used as bedding material consider a system that allows access for cleanout and unplugging. The operator should be presented with potential risks, costs of more frequent cleanouts, and equipment O&M.

Consider covering and/or minimizing the amount or number of times the material is disturbed to reduce the likelihood of air emissions formation and release of particulate matter, volatile organic compounds, methane, and ammonia.

Consider abandonment, relocation, or additional flood proofing for *existing reception structures* located in flood prone areas. For additional information on flood proofing structures, see "Flood proofing Non-

Residential Structures," FEMA 102, May 1986, Federal Emergency Management Agency.

On Farm Transfer

In locating structures, utilize existing topography to the greatest extent possible to generate head on structures and reduce pumping requirements.

Consider the operating space requirements of loading and unloading of equipment in the vicinity of the waste transfer components.

A two-foot earthen berm may be installed around the loading platform to contain any manure spilled during normal unloading operations. A pipe with a shut off valve shall be installed through the berm as an outlet.

Consider the subsurface conditions, i.e., depth to bedrock, water table, etc., when locating and designing structures.

When applicable and compatible, consider the joint use of waste transfer pipelines with irrigation system design requirements.

The pipe pressure rating required may need adjustment based on manure temperature.

Consider the potential for deposits of solids to accumulate in pipes or their outlets.

Consider the need for appropriate check valves, anti-siphon protection and open air breaks in all pipelines. Provisions should be made for removing solids from conveyance conduits such as concrete lined ditches, etc.

Consider installation of permanent above-ground or buried pipe to replace hoses and temporary pipe that is used on a regular basis to transfer waste.

Consider potential loss of loss of pipe integrity due to internal erosion by the materials being transported for a flow velocity exceeding 6 feet per second.

Consider designing the maximum flow area of a gravity pipe, for a flume system with dilute manure, at 50% of the pipe depth to maintain the scouring effect of the flow.

Positive displacement pumps should be considered for liquid waste with total solids exceeding 8%.

Consider increasing the total dynamic head up to 30% for pumping manure slurries with 3-8% total solids (wet basis).

Consider the use of a wet sump and agitation pump to reduce solids separation within the gravity reception structure.

Consider pump selection with a low RPM for manure slurries which contain abrasives such as sand.

Consider a semi-open impeller pump to handle manure slurry with straw, twine, hair and sludge. Pumps with cutting knives and re-circulation agitation capacity also reduce plugging.

Consider installing a clean-out or vent riser within 10 feet of the reception structure on gravity transfer systems in order to reduce the risk of air lock in the pipe.

Consider installing a locator wire in the trench with transfer pipelines.

Chemistry of waste material may need consideration for corrosion resistance and water tightness in the selection of pipe material and joints.

Consider the potential for struvite phosphate (magnesium ammonium phosphate), mineral deposition in smaller diameter pipes. Preventative measures may be needed, such as acid washing the pipe to prevent deposits.

Consider the need for additional check valves, clean-outs, vent risers, knife valves, anti-siphon protection, vacuum relief valves and open air breaks, as appropriate, on all transfer pipe systems.

Consider the use of leak detection methods and equipment for monitoring and periodic pressure testing of waste transfer systems installed in sensitive areas, having large daily flow volumes, long flow lengths or high flow pressures.

Consider installing a manually operated shut off valve for isolation purposes for gravity discharge pipe used for transferring waste from one structure to another.

Consider posting a warning sign on all risers indicating the transfer system pressure rating.

Silage Leachate and Runoff

Consider using additional conservation practices to impede seepage from silage bags from reaching nearby sensitive areas. Select appropriate locations for silage bags. Locate silage bags to avoid ponding of surface water. Regularly remove waste feed from silage bag staging areas.

PLANS AND SPECIFICATIONS

Plans and specifications for installing waste transfer systems shall be in accordance with this standard and shall describe the requirements for applying the practice to achieve its intended purpose.

Pipeline construction and installation specifications may be taken from the National Engineering Handbook sections listed in the References.

NRCS acceptance requires the installer to performance testing on all components of the waste transfer system. Include the results in the as-built documentation as appropriate.

OPERATION AND MAINTENANCE

A site specific Operation and Maintenance (O&M) Plan must be prepared and reviewed with the landowner or operator responsible for the application of this practice. The O&M Plan shall provide specific instructions for proper operation and maintenance of each component of this practice and shall detail the level of repairs needed to maintain the effectiveness and useful life of the practice.

Evaluate the overall functionality of the waste transfer system for possible malfunctions that could lead to a spill or release of waste material. Address the identified potential failures in the inspection procedures of the operation and maintenance plan. Prepare an emergency response plan to be implemented in the event of such a failure as a part of the O&M Plan**.**

The plan shall include contingency or emergency procedures to be followed in the event of accidental spill, seepage, or unforeseen circumstances. A copy of the O&M Plan shall be immediately available at all times.

The protective cover or barrier for the hopper or drop structure inlet shall be maintained to provide safety for animal and human traffic. The cover or barrier shall be replaced immediately after each cleaning.

Heavily bedded, frozen or dried manure can cause plugging of the transfer system. Frozen manure should be piled or stacked until thawed before loading into transfer system.

Irrigation pipelines used for transferring manure should be flushed with clean water after use.

Consider flushing pipelines once per year and drawing the storage down completely at least every two years.

Shields and other safety devices on gutter cleaners, manure pumps, and other equipment shall be maintained.

Loading areas for the manure should be capable of containing spills or directing spills back into the storage.

Hauling and spreading equipment should be calibrated on a regular basis.

Equipment operators should exercise care when loading the transfer system and unloading the storage structure to prevent damage to the system. Any damage to the system should be repaired as soon as practical. The landowner should train all persons involved in the operation of the gravity outlet system. All control valves shall be closed at the end of each day.

Consider alarms when over flows could cause water quality impairment.

Valves should be operated regularly.

Operation and maintenance manuals for pumps and other such equipment should be provided to the operator and be included in the O&M Plan or by the product supplier.

Silage Leachate

For silage leachate and runoff control sites the O&M plan shall be developed consistent with the purposes of the practice, intended life of the components, safety requirements, and the criteria for the design. At a minimum, the plan shall include:

- Handling and disposal practices for waste feed.
- Handling and disposal practices for snow associated with the feed storage area.
- Frequency for cleaning the floor of accumulated feed.
- Intervals for removing accumulated solids from the system components.
- Proper treatment and disposal practices for leachate and contaminated runoff.
- Schedule of inspections.

REFERENCES:

NRCS National Engineering Handbook, Title 210, Part 651, Agricultural Waste Management Field Handbook, Chapter 10, Agricultural Waste Management System Component Design.

NRCS National Engineering Handbook, Title 210, Part 651, Agricultural Waste Management Field Handbook, Chapter 11, Waste Utilization

NRCS National Engineering Handbook, Title 210, Part 651, Agricultural Waste Management Field Handbook, Chapter 12, Waste Management Equipment

NRCS National Engineering Manual, Title 210, Part 536.20, Design Criteria for Reinforced Concrete

NRCS National Engineering Handbook Title 210, Part 642, Chapter 2, National Standard Construction Specifications

634 WASTE TRANSFER CONSTRUCTION SPECIFICATION

1. SCOPE

This Specification covers furnishing materials and installing all components of the waste transfer systems as outlined in this specification and the drawings. Components of the systems may include reception pits, pumps, pipes, chutes, valves, or other such structures or equipment.

2. MATERIALS

All materials and equipment used shall conform to the quality and grade noted on the approved plans set forth in Section 6, or as otherwise listed. Used pipe or "seconds" shall not be used. Pipe and fittings shall be approved by the engineer prior to installation.

Reinforced concrete placement and other structures and components, including grates or covers, shall be made in conformance with the requirements of Construction Specification 313.

Equipment such as pumps, rams, chutes, chains, valves, conveyers or augers shall be new, with manufactures' warranties, as applicable. Owner's manuals shall be provided to the operator.

The pipe and fittings, where applicable, shall be marked by the manufacturer as described in the applicable ASTM specification.

PVC Pipe for pressure flow systems shall meet the requirements of schedule 40 (ASTM-D1785) or SDR Pressure Rated Pipe (ASTM-D2241) for the operating pressure specified in Section 6, or determined by the pump manufacturer. Markings shall meet the requirements of ASTM-D1785 or ASTM-D2241 as applicable.

Fittings for pressure systems shall be rated equal to the pipe specified.

Pipe used in gravity flow systems shall conform to the following specifications:

Table for Gravity Pipe

Pipe Material	Specification
Polyvinyl Chloride (PVC)	**ASTM F 679** **ASTM D1785, D3034** **ASTM D2241 (13.5 – 32.5)** **ASTM F794**
Fiberglass	**ASTM D 3754**
Polypropylene(PE)	**ASTM F2736**
Polyethylene(PP)	**ASTM F894, F2648** **ASTM D3035** **AASHTO M252, M294**
Steel	**ASTM A53, ASTM A134, or ASTM A135, ASTM A139**

Joints in PVC, PP, and PE gravity pipelines with push-on (gasketed) joints shall meet the requirements of ASTM D3212 for joint tightness.

Joints in PVC pressure flow systems shall meet the requirements of ASTM-D2672 or ASTM D3139. PVC cement shall meet ASTM-D2564.

Pre-cast concrete units shall conform to Penn DOT requirements for such units and be approved by the Engineer or his/her designated representative.

3. EQUIPMENT REQUIREMENTS

The equipment furnished as part of the waste transfer system shall be compatible with the type of manure and waste to be transferred and meet

all the performance requirements set forth in Section 6 of this specification. The contractor shall be responsible for assessing the consistency, nature, quality and quantity of the manure and waste to be transferred and provide the appropriate equipment.

The contractor shall provide in writing the performance characteristics (discharge and head) of the transfer equipment and its relationship to or requirements of the following:

a) Operating horsepower requirements.
b) Maximum or minimum elevation or distance instructions.
c) Daily operational maintenance requirements.
d) Estimated serviceable life.

In order to confirm the operation of the equipment, the contractor shall work with the landowner during several operation cycles.

4. COMPONENT INSTALLATION

All components of the system shall be installed to the lines and grades shown on the drawings.

Openings for appurtenances, pipe, etc., shall be sealed by packing a neat cement-mortar mix bituminous caulk or other appropriate joint sealing compound between the appurtenance and the structure to form a liquid-tight seal.

a. Equipment

All transfer equipment shall be installed to the manufacturer's recommendations. The final installation shall be certified by the installer as to meeting all the guidelines, recommendations, or requirements of the manufacturer and this specification.

b. Pipelines

All pipe shall be installed to provide watertight joints.

Pipe installed in conjunction with a pump shall meet or exceed the pump manufacturer's recommendations.

Pipe shall be placed on undisturbed soil or non-yielding compacted material. Over-excavation must be corrected as noted on the drawings, or as directed by the responsible engineer or his designated representative.

Backfill shall be placed so as not to damage the pipe nor disturb alignment in any way.

All pipe shall be properly bedded as designated on the drawings or in Section 6.

c. GRATES

All grates or coverings shall be constructed to be removable for maintenance purposes.

d. STRUCTURES

Pre-cast structures shall have shop drawings or schematics and shall be furnished to the engineer prior to installation.

5. CERTIFICATION

The waste transfer system shall be certified by the contractor responsible for the final installation. The system shall conform to all the applicable material and construction specifications and the equipment manufacturer requirements.

6. ADDITIONAL CONDITIONS WHICH APPLY TO THIS PROJECT ARE:

Appendix D
PA620 Underground Outlet

CONSERVATION PRACTICE STANDARD

UNDERGROUND OUTLET

(Ft.)

CODE 620

DEFINITION

A conduit or system of conduits installed beneath the surface of the ground to convey surface water to a suitable outlet.

PURPOSE

To carry water to a suitable outlet from terraces, water and sediment control basins, diversions, waterways, surface drains, other similar practices or flow concentrations without causing damage by erosion or flooding.

CONDITIONS WHERE PRACTICE APPLIES

This practice applies where:

- Disposal of surface water is necessary.
- An outlet is needed for a terrace, diversion, water and sediment control basin or similar practice and a surface outlet is impractical because of stability problems, topography, climatic conditions, land use or equipment traffic.

CRITERIA

General Criteria Applicable to All Purposes

Fire resistant materials shall be used for underground outlet components if fire is an expected hazard. All plastics must be UV resistant or protected from exposure to sunlight.

Components of underground outlets, including inlet collection boxes and conduit junction boxes, shall be designed with sufficient size to permit maintenance and cleaning operations.

Perforated components of underground outlets shall be designed to prevent soil particle movement into the underground outlet. Refer to Conservation Practice Standard PA606, Subsurface Drain, for criteria for design of filters.

Capacity. The design capacity of the underground outlet will be based on the requirements of the structure or practice it serves. The underground outlet can be designed to function as the only outlet for a structure or in conjunction with other types of outlets. The capacity of the underground outlet shall be adequate for the intended purpose without causing inundation damage to crops, vegetation, or works of improvement.

The underground outlet shall be designed to account for anticipated water surface conditions at the outlet during design flow.

Flood routing techniques may be used to determine the relationship between flooding duration, underground release rate, and basin storage volume.

Underground outlets may be designed for either pressure or gravity flow. If designed as a pressure system, all pipes and joints must be adequate to withstand the design pressure, including surge pressure and vacuum conditions.

An underground outlet shall not be designed to discharge into a structure unless the structure is designed to accommodate the additional inflow.

For gravity flow systems, utilize a flow restricting device such as an orifice or weir to limit flow into the conduit or choose conduit sizes that are large enough to prevent pressure flow.

Pressure-relief wells may be used to allow excess flow to escape the conduit and flow over the ground surface. Use pressure relief wells only where there is a stable outlet for the flow from the relief well. Pressure relief wells should be covered with a grate or other appropriate covering to prevent the entry of small animals and debris.

Inlet. An inlet can be a collection box, blind inlet (gravel), perforated riser, perforated conduit, or other appropriate device.

Design collection boxes large enough to allow maintenance and cleaning operations.

Open inlets must have a trash guard. Design the inlet to permit trash or debris entering the inlet to pass through the flow restricting device and conduit without plugging.

Perforated riser inlets shall be durable, structurally sound, and resistant to damage by rodents or other animals. Perforations must be smooth, free of burrs, and have adequate capacity to prevent the riser from restricting flow in the underground outlet.

Blind inlets may be used where the installation of an open or above ground structure is impractical. Design the blind inlet to prevent soil particle movement into the conduit.

Conduit. The minimum allowable diameter of conduits is 4 inches. Conduit joints shall be hydraulically smooth and consistent with the manufacturer's recommendation for the conduit material and installation.

If junction boxes and other structures are needed, design them to allow cleaning and other maintenance activities.

Design the underground outlet to ensure that maximum allowable loads on the conduit are not exceeded for the type and size of conduit. Depth of cover requirements shall be assessed to prevent damage to the underground outlet from tillage operations and frost action.

Thrust blocking or anchoring shall be provided where needed to prevent undesired movement of the conduit. Placement and bedding requirements for the conduit are required to ensure integrity of the installation.

The flow velocity in the conduit must not exceed the maximum allowable design velocity for the conduit materials and installation condition. Gravity flow systems must maintain a positive grade throughout the conduit length towards the outlet.

Refer to Conservation Practice PA606, Subsurface Drain, for criteria for design loading, thrust blocking, placement and bedding requirements, and minimum and maximum design velocity in the conduit.

Materials. All materials specified in Conservation Practice Standard PA606, Subsurface Drain, may be used for underground outlets. Materials must meet applicable site specific design requirements for leakage, external loading, and internal pressure including vacuum conditions.

Underground outlets shall be conduits of continuous tubing, tile or pipe and may be perforated or non-perforated. Perforated outlets shall be designed to prevent soil particle movement into the conduit. Use a filter fabric wrap (sock) or appropriately designed granular filter if migration of soil particles into the conduit is anticipated. Refer to Conservation Practice PA606, Subsurface Drainage for criteria for the design of filter media.

Outlet. The outlet must be stable and protected against erosion and undermining for the range of design flow conditions. Do not design outlets to be placed in areas of active erosion.

The outlet must consist of a continuous section of pipe, 10 feet or longer, without open joints or perforations, and with stiffness necessary to withstand expected loads, including those caused by ice.

A shorter section of closed conduit may be used if a headwall is used at the outlet of the conduit.

All outlets shall have animal guards to prevent the entry of rodents or other animals. Design animal guards to allow passage of debris while blocking the entry of animals large enough to restrict the flow in the conduit.

A vertical outlet may be used to discharge water to the ground surface where topography does not allow adequate conduit cover using a horizontal outlet, or where it is practical to discharge over a vegetated filter strip.

The vertical outlet (relief well) shall be adequately perforated and placed in an envelope of coarsely graded aggregate to allow the system to drain during periods when not in use.

Stabilization. Reshape and regrade all disturbed areas so that they blend with the surrounding land features and conditions. For areas that will not be farmed, refer to Conservation Practice Standard PA342, Critical Area Planting, for establishment of vegetation criteria. Permanent vegetation shall be

established on all disturbed areas as soon as possible after construction.

CONSIDERATIONS

Pressure relief wells and vertical outlets, if not properly covered, can present a safety hazard for people or animals and may be damaged by field equipment. Pressure relief wells and vertical outlet locations should be identified with a high visibility marker.

To prevent sediment from collecting in the conduit, underground outlets should be designed with a minimum velocity of 1.4 ft/sec.

Consideration should be given to the effects that the underground outlet may have on water quantity downstream. Consider these long term environmental, social, and economic effects when making design decisions for the underground outlet and the structure or practice it serves. Refer to Conservation Practice Standard PA554, Drainage Water Management, for criteria on flow restriction from natural basins.

Where wetlands may be affected, the cooperator will be advised and current NRCS wetland policy will apply.

Seasonal water sources can be beneficial for migratory waterfowl and other wildlife. Consider the use of a water control structure, on the inlet of an underground outlet, during non-cropping periods to provide water for wildlife. Refer to Conservation Practice Standard PA646, Shallow Water Development and Management, for information on managing seasonal water sources for wildlife.

Underground outlets can provide a direct conduit to receiving waters for contaminated runoff from crop land. Underground outlets and the accompanying structure or practice should be installed as part of a conservation system that addresses issues such as nutrient and pest management, residue management and filter areas. State/local policy may dictate minimum setback requirements for these outlets.

The construction of an underground outlet in a riparian corridor can have an adverse effect on the visual resources of the corridor. Consider the visual quality of the riparian area when designing the underground outlet.

Consider potential effects of soil physical and soil chemical properties influence on area where a conduit or system of conduits are installed to convey surface water. Refer to soil survey data as a preliminary planning tool for assessment of areas. Consult the Web Soil Survey to obtain soil properties and qualities information.

If an installation in a crop field is too shallow, tillage equipment can damage an underground outlet. Consider the type and depth of tillage that will likely occur when designing the depth of an underground outlet. A minimum of 2 feet of cover is recommended over all conduits.

PLANS AND SPECIFICATIONS

Prepare plans and specifications for underground outlets that describe the requirements for applying this practice according to this standard. The plans and specifications for an underground outlet may be incorporated into the plans and specifications for the structure or practice it serves. As a minimum the plans and specifications shall include:

- A plan view of the layout of the underground outlet.
- Typical cross sections and bedding requirements for the underground outlet.
- Profile of the underground outlet.
- Details of the inlet and outlet.
- Seeding requirements if needed.
- Construction specifications that describe in writing the site specific installation requirements of the underground outlet.

OPERATION AND MAINTENANCE

Prepare an operation and maintenance plan for the operator. The minimum requirements to be addressed in a written operation and maintenance plan are:

- Periodic inspections, especially immediately following significant runoff events, to keep inlets, trash guards, and collection boxes and structures clean and free of materials that can reduce flow.
- Prompt repair or replacement of damaged components.
- Repair or replacement of inlets damaged by farm equipment.

- Repair of leaks and broken or crushed lines to insure proper functioning of the conduit.
- Periodic Inspection of the outlet and animal guards to ensure proper functioning.
- Repair of eroded areas at the pipe outlet.
- Maintenance of adequate backfill over the conduit.
- To maintain the permeability of surface materials on blind inlets, periodic scouring or removal and replacement of the surface soil layer may be necessary.

REFERENCES

USDA, NRCS. National Engineering Handbook, Part 650 Engineering Field Handbook, Chapters 6, 8 & 14.

Web Soil Survey:
http://websoilsurvey.nrcs.usda.gov/app/

Construction Specification

620. UNDERGROUND OUTLET

1. SCOPE

The specification covers the fabrication, installation, and construction of underground outlets.

2. MATERIALS

The materials required for the underground outlet shall be as shown on the drawings or as otherwise required in Section 9.

a. DRAINFILL AGGREGATE shall meet the requirements of Penn DOT, Publication 408, Section 703, fine and coarse aggregate. The size and gradation shall be as specified in the additional conditions of this specification or on the drawings.

b. PIPE shall meet the requirements of Table 1, and as set forth in Section 9 and/or on the drawings. All pipes shall be clearly marked with the appropriate specification designation. If plastic pipe is stored on site for a length of time, it should be protected from sunlight. At the time of installation, it should be kept as cool as possible to minimize elongation of the pipe during installation.

c. GEOTEXTILE shall meet the requirements as outlined in PennDOT Publication 408, Section 735, Class 1, Subsurface Drainage.

Table 1 – Drain pipe requirements

Type	Specification
Clay drain tile, solid	ASTM-C-4
Clay pipe, standard and extra strength	ASTM-C-700
Clay pipe testing	ASTM-C-301
Concrete drain tile	ASTM-C-412
Concrete pipe for irrigation or drainage	ASTM-C-118
Concrete pipe or tile, determining physical properties of	ASTM-C-497
Concrete sewer, storm drain and culvert pipe	ASTM-C-14
Reinforced concrete culvert, storm drain and sewer pipe	ASTM-C-76
Perforated concrete pipe	ASTM-C-444
Portland cement	ASTM-C-150
Pipe, bituminized fiber & fitting	Fed Spec SS-P-1540
Styrene rubber (SR) plastic drain pipe & fitting	ASTM-D-2852
Polyvinyl chloride (PVC), Sch'd. 40, 80, 120	ASTM-D-1785
Polyvinyl chloride (PVC) sewer pipe & fitting	ASTM-D-2729
Polyvinyl chloride (PVC) pipe	ASTM-D-3034 type PSM
Corrugated polyethylene tubing & fitting (3-6 inch)	ASTM-F-405
Corrugated polyethylene tubing & fitting (8-24 inch)	ASTM-F-667
Pipe, corrugated (steel, polymer coated)	ASTM-A-762
Pipe, corrugated (steel, zinc coated)	ASTM-A-760

d. CONCRETE and related materials shall meet the requirements set forth in Conctruction Specification PA313S, Waste Storage Facility (Structure), and/or as set forth in Section 9.

All materials shall be carefully inspected prior to installation. Clay and concrete tile shall be checked for damage by freezing. Plastic pipe and tubing shall be protected from hazards causing deformation. Any damaged or imperfect pipe or tubing shall not be installed. Any pipe or tubing which is damaged during installation shall be removed and replaced.

3. SITE PREPERATION

All trees, brush, fences and rubbish shall be cleared within the area that the subsurface drain will be installed. All material removed by the clearing and grubbing operation shall be disposed of as directed by the Owner or his/her Representative.

4. INSPECTION AND MATERIAL HANDLING

Material for underground outlets shall be carefully inspected before the drains are installed. If applicable, clay and concrete tile shall be checked for damage from freezing and thawing before it is installed. Bituminized fiber and plastic pipe and tubing shall be protected from hazard causing deformation or warping. Plastic pipe and tubing with physical imperfections shall not be installed. Any damaged section shall be removed and replaced. All material shall be satisfactory for its intended use and shall meet applicable specifications and requirements.

5. SAFETY

All positive “design” responses from the Pennsylvania One Call System are noted on the plans. It is the Contractor’s or Landowner’s responsibility to notify One Call of pending construction and to contact the affected utility for marking at the time of construction.

The Contractor must comply with OSHA requirements Part 1926, subpart P, for protection of workers entering trench.

6. EXCAVATION

Construction operations shall be done in such a manner that soil and water pollution are a minimum and all state and local erosion regulations are followed.

Unless otherwise specified, excavation for each underground outlet shall begin at the outlet end and progress upstream. The trench shall be excavated to the grades and cross sections shown on the drawings. The trench width above the conduit may increase as necessary for safe installation or for the convenience of the Contractor. Trench shields, shoring, or bracing are required whenever workers will be in a trench deeper than four feet, or as otherwise required be OSHA Regulations.

7. INSTALLATION

BEDDING. In stable soils, the conduit shall be firmly and uniformly bedded throughout its entire length as required on the drawings or Section 9. Where the underground outlet foundation is in unstable soils, the bedding shall be as shown on the drawings or as otherwise required by the Engineer. Where the conduit is to be laid in rock, or rock is exposed at the trench bottom, the rock shall be removed at least two inches below the invert grade to allow for compacted bedding under the conduit.

PLACEMENT. Debris inside of pipes and tubing shall be removed prior to installation. The conduit ends shall be protected during placement. Similarly, all appurtenances, including trash guards and animal guards, shall be protected during installation to avoid damage. All underground outlets shall be laid to line and grade, and immediately covered

with an approved blinding, envelope, or the required depth of filter material. No reversals in grade of the conduit are permitted, no more than five percent stretch is allowed. Special precautions must be taken in hot weather to observe this stretch limit.

Flexible conduits, such as plastic pipe or tubing and bituminized fiber pipe, shall be installed, according to the requirements in ASTM-F-449, “Standard Recommended Practice for Subsurface Installation of Corrugated Thermoplastic Tubing for Agricultural Drainage or Water Table Control.”

Earth backfill material shall be placed in the trench in a manner to ensure that the conduit does not become displaced and so that the filter and bedding material, after backfilling, meet the requirements of the plans and specifications.

8. BACKFILL

Initial backfill shall be of selected material that is free of rocks or other sharp-edged material that could damage the pipe. Earth backfill shall be placed in the trench in such a manner that the conduit is not displaced, and that the filter and bedding materials are not contaminated or displaced. Unless otherwise specified, where the underground outlet is laid under roads or at other designated locations, the backfill shall be placed in successive layers of not more than six inches, and each lift compacted before the subsequent layer. Backfill shall extend above the adjacent ground to allow for settlement, and be well rounded over the trench.

Work areas shall be restored to their pre-construction condition or as otherwise required in the plans or Section 9.

9. ADDITIONAL CONDITIONS WHICH APPLY TO THIS PROJECT ARE: