General Technical Assistance Contract
Contract Number SAP#4000018577

SITE CHARACTERIZATION REPORT
ADDENDUM 1

NOCKAMIXON TCE SITE
NOCKAMIXON TOWNSHIP
Bucks County, Pennsylvania

Contract Requisition Number GTAC6-1-290

February 2020

Pennsylvania Department of Environmental Protection
Southeast Regional Office
2 East Main Street
Norristown, Pennsylvania 19401

TETRA TECH

PHIL-27126

SITE CHARACTERIZATION REPORT

ADDENDUM 1

NOCKAMIXON TCE SITE
Nockamixon Township
Bucks County, Pennsylvania

Prepared for:
Pennsylvania Department of Environmental Protection
Southeast Regional Office
2 East Main Street
Norristown, Pennsylvania 19401

Prepared by:
Tetra Tech, Inc.
234 Mall Boulevard
King of Prussia, Pennsylvania 19406

Prepared under:
Contract Number SAP#4000018577
Contract Requisition Number GTAC6-1-290

February 2020

Prepared By:

Kevin C. Kilmartin, PG
Project Manager
Tetra Tech

Reviewed By:

Don Whalen, PG
Geologist
Tetra Tech

TABLE OF CONTENTS

SECTION **PAGE**

1.0 INTRODUCTION 1-1
1.1 SITE DESCRIPTION 1-1
1.2 GENERAL SITE HYDROGEOLOGY 1-1

2-1 FIELD INVESTIGATION 2-1
2.1 SOIL GAS SAMPLING – TASK 3016 2-1
2.1.1 Phase 1 Soil Gas Screening 2-1
2.1.2 Phase 2 Soil Gas Sampling 2-2
2.2 SOIL SAMPLING – TASK 3011 2-3
2.2.1 65 Brennan Road Soil Borings 2-3
2.2.2 84 Brennan Road Soil Borings 2-4
2.2.3 84 Brennan Road Surface Water Opportunity Samples 2-4
2.3 GEOPHYSICAL INVESTIGATIONS – TASK 3040 2-4
2.3.1 Utility Clearance and Subsurface Screening 2-4
2.3.2 Borehole Geophysical Logging 2-4
2.4 MONITORING WELL MODIFICATIONS – TASK 3030 2-5
2.5 INDOOR AIR SAMPLING – TASK 3014 2-5
2.5.1 65 Brennan Road 2-6
2.5.2 84 Brennan Road 2-6
2.5.3 Regional Sampling – February 2018 2-6
2.6 INDOOR AIR QUALITY (IAQ) MITIGATION – TASK 4201 2-7
2.6.1 65 Brennan Road 2-7
2.6.2 84 Brennan Road 2-8

3.0 RESULTS AND CONCLUSIONS 3-1
3.1 65 BRENNAN ROAD 3-1
3.1.1 Soil 3-1
3.1.2 Soil Gas 3-2
3.1.3 Aqueous Perched Groundwater 3-2
3.1.4 Discussion 3-2
3.2 84 BRENNAN ROAD 3-3
3.2.1 Discussion 3-4
3.3 MOUNTAIN VIEW DRIVE 3-4
3.3.1 Discussion 3-4
3.4 PARK DRIVE WEST 3-4
3.4.1 Discussion 3-4
3.5 CONCLUSIONS 3-5
3.5.1 Nature and Extent of Source Area 3-5
3.5.2 Rough Estimate of Volume of Contaminated Media 3-5
3.5.3 Preliminary Discussion of Potential Remedial Technologies 3-6
3.5.4 Suggested Additional Investigation 3-7

APPENDICES

A MW-1S WELL LOGGING REPORT
B 65 BRENNAN ROAD MITIGATION DOCUMENTATION
C 84 BRENNAN ROAD MITIGATION DOCUMENTATION
D PASSIVE SOIL GAS INVESTIGATION – 2015

TABLE OF CONTENTS (Continued)

TABLES

NUMBER

2-1 Soil Data Summary
2-2 Groundwater from Vapor Probes Data Summary
2-3 Soil Gas Data Summary
2-4 VI Results for 65 Brennan Road
2-5 VI Results for 84 Brennan Road
2-6 PADEP Multimedia Regional Sampling Results

FIGURES

NUMBER

1-1 Site Location Map
2-1 Off-Site Media Sampling 84 Brennan Road - January - February 2019
2-2 Soil Gas Probe Results - July 2018, September 2019, and November 2019
2-3 North Soil Boring Results - July 2015, January 2017, and June 2018
2-4 South Soil Boring Results - July 2015 and January 2017
2-5 Residential Sampling Locations

1.0 INTRODUCTION

This report documents the results of additional source investigation conducted for the Pennsylvania Department of Environmental Protection (DEP) at the Nockamixon Trichloroethene (TCE) site located in Nockamixon Township, Bucks County, Pennsylvania. The work was performed under the General Technical Assistance Contract (GTAC) SAP#4000018577, contract requisition number GTAC6-1-290. This work was performed as a follow-up and continuation of the previous source investigation documented in the *Site Characterization Report, Nockamixon TCE Site* (Tetra Tech, 2015).

1.1 SITE DESCRIPTION

The Nockamixon TCE site is located in Nockamixon Township, Bucks County, Pennsylvania (Figure 1-1). The site consists of an extensive groundwater plume that is suspected to originate from the former Schulberger Farm located on Brennan Road, based on the site's hydrogeological interpretation, aerial photography analyses, and the results of previous investigations.

DEP currently samples, or has previously sampled, more than 100 private residential and commercial wells in the vicinity of the site. More than 40 of these private water supplies contain or have contained TCE at levels that exceed the Maximum Contaminant Level (MCL) of 5 µg/L, as defined by the Pennsylvania Safe Water Drinking Act. Tetrachloroethene (PCE) and 1,1-Dichloroethene (1,1-DCE) have also been detected above drinking water criteria in at least one private well. DEP has installed point-of-entry treatment units (POETs) on the potable wells where MCLs have been exceeded.

DEP has sampled multiple residences located above and in the vicinity of the groundwater plume for potential impacts from vapor intrusion (VI). The sampling includes the subsoil vapor, indoor air, and outdoor ambient air media. As a result of this sampling program, DEP identified two residences where VI mitigation was required. The installation of the mitigation systems is included in this report.

The primary purposes of the current work assignment are to further characterize and quantify the nature and the lateral and vertical extent of contaminated soils on and near the former Schulberger Farm, to evaluate the VI exposure pathway, to install any additional monitoring infrastructure needed to define and monitor site contamination, and to begin preliminary discussions regarding potential site remedial options and alternatives.

1.2 GENERAL SITE HYDROGEOLOGY

The unconsolidated soil overlying the bedrock and the vapor and perched groundwater within the soil are the primary media of concern for this additional investigation. The soil types are predominantly classified as poorly drained silt loams. Standing water is not unusual during the spring thaw. Based on site boring logs, the typical depth to bedrock ranges between about 5 to 15 feet.

The entire project area is underlain by the Triassic to Jurassic - aged Brunswick Formation and Lockatong Formation. The Brunswick Formation dominantly consists of fine-grained shale, siltstone, and mudstone. The Lockatong Formation consists predominantly of argillite. The site bedrock conditions have been extensively discussed in the previous project reports, and were not the focus of this current project, which focused on the detection and delineation of source materials lying within the soil and overburden.

The depth to groundwater beneath the site is typically 50 feet or greater, so the regional water table is encountered well below the top of bedrock. Within the Triassic bedrock, infiltrating precipitation often forms a perched water table at the soil/bedrock interface. This feature was frequently encountered during the current investigation and prevented the collection of multiple soil gas samples. Where this occurred, aqueous samples of the perched groundwater were typically obtained in place of the soil gas.

2.0 FIELD INVESTIGATION

The additional source area investigation consisted of the following field tasks, identified by the DEP Work Breakdown Structure (WBS) coding system.

Investigation Tasks:

3011 – Soil Sampling

3014 – Indoor Air Sampling

3016 – Soil Gas Sampling

3030 – Well Modifications

3040 – Geophysical Investigation

4201 – Indoor Air Quality (IAQ) Mitigation

2.1 SOIL GAS SAMPLING – TASK 3016

Tetra Tech performed a two-phase soil gas investigation designed to additionally delineate the source(s) of the VOC plume. The Phase I investigation covered 84 Brennan Road where elevated vapor detections had been detected in the current residence (Figure 2-1), and consisted of a semi-quantitative screening investigation intended to identify any hot-spots of VOC contamination in the soil or underlying groundwater. Phase 2 consisted of a quantitative investigation of selected locations through the installation and sampling of soil gas probes.

2.1.1 Phase 1 Soil Gas Screening

For the Phase 1 investigation of 84 Brennan Road, an irregular sampling grid with approximately 50-foot nodal spacing was established across the area of investigation with a measuring tape (Figure 2-1). Sample locations were limited to open field and paths within the dense woods, and marked in the field with a pin flag. The locations were then screened for the presence of buried utilities by Advanced Geological Services, a geophysical subcontractor.

A 1-inch-diameter soil boring was driven with a steel rod and hammer to a subsurface depth of approximately 3 feet at each sampling node. The boring was screened with a Mini-Rae photoionization detector (PID) capable of detections in the parts per billion (ppb) range for a period of approximately 30 seconds, and the maximum PID reading was recorded.

The results of the Phase 1 screening are illustrated in Figure 2-1. The PID responses ranged from non-detect or no readings to approximately 11,300 parts per billion (ppb). Although PID responses are semi-

quantitative and can be affected by outside variables, the elevated responses generally clustered together and identified the areas where additional investigation was warranted.

2.1.2 Phase 2 Soil Gas Sampling

Phase 2 soil gas sampling was performed during three different mobilizations. Soil gas points were installed in June 2018 using direct-push technology (DPT) and sampled on June 19 and July 18, 2018. Additional points were installed in September 2019. These points were installed by drilling a two-inch boring to a depth of three feet with an auger and rotary hammer drill. Then, a 1.5-inch diameter soil core was driven for 0.5 feet with a slide hammer fitted with a coring bit and polyethylene sleeve. The sleeve was opened and scanned for VOCs with the PID. The process was repeated until probe refusal or bedrock was encountered.

The probes were installed with one or two feet of 0.10-millimeter slotted screen, and filter sand was installed in the annulus to a height of 0.5 feet above the top of the screen. The remainder of the annulus was backfilled to the ground surface with bentonite. The locations of the probes are illustrated in Figure 2-2.

Soil gas samples were obtained for quantitative laboratory analyses through the collection of the soil gas into PADEP Bureau of Laboratories (BOL) – supplied Summa canisters. First, a static leak test was performed on the canister and the above-ground components of the sampling train. Then, a leak test was performed on the underground components by placing a shroud over the probe and filling it with helium to a saturation level of 98 – 100% as determined by a helium detector. The sample system was then purged of three casing volumes of air. If the purged air contained less than 1% helium, the system passed. If the system failed, the seals and components were checked, adjusted, and retested. The analytical sample was subsequently obtained by opening the T-valve towards the canister, and opening the canister valve.

2.1.2.1 Phase 2 Aqueous Sampling of Soil Gas Probes

Multiple sampling probes could not be sampled for soil gas on various dates due to the presence of perched groundwater within the probe. When this occurred, aqueous screening samples of the perched groundwater were collected in lieu of the soil gas. To collect the aqueous sample, three volumes of water were purged through the sample tubing. The samples were collected by removing 50 milliliters of water from the tubing with a syringe, and transferring the water to a pre-preserved VOC sample vial.

Sampling probes SG-2, SG-7, and SG-9 were removed during or at the conclusion of the investigation. The other probes remained in place.

The results of the Phase 2 investigation are summarized in Table 2-2. The VOC detections exceeding screening criteria are illustrated in Figure 2-2. Highly elevated concentrations of TCE and PCE were detected on site at SG-01 and SG-3, and the SG-04 on the 84 Brennan Road property.

2.2 SOIL SAMPLING – TASK 3011

The soil boring program was performed during four separate mobilizations to further delineate the nature and extent of soil contamination detected during previous investigation and to determine the nature of potential soil contamination at the 84 Brennan Road property as identified by the results of the Phase 1 and Phase 2 soil gas investigations. Soil borings were obtained in January 2017 through the services of drilling subcontractor Environmental Probing Investigations, Inc. and in June 2018 through the services of drilling subcontractor Ferris Company, LLC. These soil locations are illustrated on Figures 2-3 and 2-4 and listed in Table 2-1. Soil samples at 84 Brennan Road were obtained in January 2019 and September 2019 by Tetra Tech. The soil locations are illustrated on Figure 2-1. All samples were driven to the DEP Southeastern Regional Office under chain-of-custody protocol. A DEP-contracted courier transported the samples to BOL, where all laboratory analyses were performed.

2.2.1 65 Brennan Road Soil Borings

Soil borings at 65 Brennan Road were advanced using a Geoprobe direct-push technology (DPT) drilling rig. To drill the borings, a probe assembly fitted with 4-foot-long acetate sleeve was hydraulically advanced ("pushed") into the subsurface to obtain continuous soil cores that were 4 feet in length. The probe and sleeve were withdrawn, the sampling assembly was fitted with a new acetate sleeve, and reinserted into the borehole. The process was repeated until the top of bedrock was reached, as defined by DPT refusal. DPT borings produce very few drill cuttings. Those that were produced were placed back in the boring, and the remainder of the boring was sealed with granular bentonite chips and covered with local topsoil. The DPT drive shoe was the only non-disposable piece of sampling equipment that contacted the soil. The drive shoe was decontaminated at the boring location at the conclusion of each boring by soaking the shoe in a bucket of Alconox and water, followed by brushing and rinsing the shoe in a bucket of potable water.

For soil screening, each acetate liner was cut open upon retrieval. The core was visually examined for qualitative signs of contamination such as soil staining, and the soil interval was vertically screened for VOCs with a PID by disturbing the surface of the core approximately every 6 inches with a disposable trowel.

Soil samples were obtained from each boring for quantitative laboratory analyses for VOCs. The VOC samples were obtained with Quality Environmental Container (QEC) – supplied Method 5035 custom field preservation kits. Each kit contained two VOA sampling vial preserved with methanol and the tare weight recorded on the label, a jar for the soil moisture sample, and a sampling apparatus consisting of a sampling cartridge and a sampling handle. The soil sample was obtained by pushing the cartridge into the core by the handle until the cartridge was full, and then ejecting the soil from the cartridge directly into the VOA vials by rotating and pushing the sampling handle.

Samples were driven to the DEP Southeastern Regional Office under chain-of-custody protocol. A DEP-contracted courier transported the samples to BOL, where all laboratory analyses were performed.

2.2.2 84 Brennan Road Soil Borings

Shallow soil samples at the 84 Brennan Road property were obtained by drilling a borehole to a depth of two feet with an auger and rotary hammer drill. Then, a 1.5-inch diameter soil core was driven for 0.5 feet with a slide hammer fitted with a coring bit and polyethylene sleeve. The sleeve was opened and scanned for VOCs with the PID. The process was repeated until probe refusal or bedrock was encountered. The soil interval exhibiting the highest PID response was selected for VOC laboratory analyses and obtained using the same QEC sampling equipment used for the on-site soil borings.

Samples were driven to the DEP Southeastern Regional Office under chain-of-custody protocol. A DEP-contracted courier transported the samples to BOL, where all laboratory analyses were performed.

2.2.3 84 Brennan Road Surface Water Opportunity Samples

Surface water sampling was not a planned task under the current investigation. However, several small seeps and a pond were encountered at the 84 Brennan Road property during the performance of the soil gas and soil sampling tasks. DEP directed Tetra Tech to obtain aqueous grab samples, including one at each seep location and two at opposite ends of the pond. The locations of these samples are illustrated on Figure 2-1 and included in Table 2-2. The samples were obtained by direct-pour of the surface water into pre-preserved VOC sample vials, which were subsequently included in the daily shipment of samples to BOL for analyses.

2.3 GEOPHYSICAL INVESTIGATIONS – TASK 3040

2.3.1 Utility Clearance and Subsurface Screening

Tetra Tech screened each selected soil boring location through a geophysical survey prior to mobilization of the drilling subcontractor. The purpose of the survey was to investigate whether utilities, drums, or buried metallic debris exist at each location.

The subsurface screening was performed during three field mobilizations. Locations were cleared by TPI Environmental of Easton, PA in January 2017. Additional locations at 84 Brennan Road were screened by AGS, Inc. of Malvern, PA in June 2018 and January 2019.

2.3.2 Borehole Geophysical Logging

Monitoring well MW-1S required geophysical logging to determine the zone(s) over which a permanent screened monitoring well(s) could be retrofitted into the existing borehole. This well had previously existed

as a 6-inch diameter, bedrock borehole that was open from a depth of 42 feet (depth of steel surface casing) to a total depth of 147 feet. The location of the well is illustrated on Figure 2-3.

Borehole geophysical logging was performed by AGS, Inc. of Malvern, PA on October 30, 2019. The following suite of geophysical logs were run:

- Gamma ray
- Fluid resistivity
- Fluid temperature
- Caliper
- Acoustic televiewer
- Heat pulse flowmeter under ambient and stressed conditions

The geophysical logging report is included as Appendix A. The results indicated that the static water level in the well was 96.5 feet, and that groundwater entered the borehole through two zones including a set of small bedding plane fractures extending from 99 to 101 feet, and a larger and more productive joint or fracture at 131.6 feet that dips steeply to the north. The flowmeter results indicated that under ambient conditions, groundwater enters the borehole from the shallower fractures and flows downward within the borehole before exiting through the larger fracture at the bottom of the borehole. Under stressed (pumping) conditions, groundwater above the deeper fracture flowed upward toward the pump while the groundwater below the fracture was not affected by the pumping.

Based upon the results of the geophysical logging, DEP determined that two 2-inch diameter wells should be installed within the borehole. A deep well would be installed and screened from 130 to 140 feet to monitor the deep fracture at the bottom of the borehole, and a shallow well would be installed and screened from 90 feet to 110 feet to monitor the fractures just below the water table plus a second fracture at 91 feet that might contribute groundwater during times of higher groundwater elevations.

2.4 MONITORING WELL MODIFICATIONS – TASK 3030

Tetra Tech subcontracted Eichelbergers, Inc. of Mechanicsburg, PA to install the nested monitoring wells in MW-1S. This work was performed December 18 – 19, 2019 and January 23, 2020. The monitoring well construction log is included in Appendix A.

2.5 INDOOR AIR SAMPLING – TASK 3014

DEP periodically obtains indoor air samples from residences located in the vicinity of the VOC groundwater plume to evaluate the potential impacts of VOC vapor intrusion into these homes. During the performance of this work assignment, Tetra Tech occasionally, but not consistently, assisted DEP with the collection of

these samples. During these events, one or more 6-L Summa canisters equipped with 24-hour regulators were placed in the residences and retrieved the following day. All vapor analyses were performed by BOL.

2.5.1 65 Brennan Road

The residence located at 65 Brennan Road was constructed with a passive radon gas mitigation system in the slab. Previous routine indoor air sampling conducted by DEP detected the presence of site-related VOCs in the indoor air.

Tetra Tech obtained indoor air, ambient air, and subslab vapor samples from the residence on May 1 – 2, 2017. The analytical results are reported in Table 2-2. Based on these results, DEP initiated an IAQ mitigation effort to reduce the health risks created by the vapor intrusion issue. The mitigation task is discussed in Section 2.6.1.

DEP obtained post-mitigation samples on May 8 – 9, 2019. The analytical results are also reported in Table 2-4 for comparison. These results confirm that the vapor intrusion mitigation has addressed the risks associated with the vapor intrusion pathway at this residence.

2.5.2 84 Brennan Road

Previous routine indoor air sampling conducted by DEP in February and April 2016 detected the presence of site-related VOCs in the indoor air. Additionally, the results of the soil gas sampling detected high concentrations of VOCs in the immediate vicinity of the residence. Consequently, DEP decided that mitigation was needed at the residence, and installed the system in December 2018 (see Section 2.6.2).

DEP obtained post-mitigation samples of indoor air and outdoor air from the residence on January 30 and 31, 2019. The analytical results are reported in Table 2-5.

The results of the post-mitigation sampling are difficult to interpret. In the basement (which is closest to the subsurface source), only PCE was detected at a concentration of 1.31 ug/m^3, and no VOCs were detected in the adjacent crawlspace. In the first floor of the house, PCE was detected at 10.3 ug/m^3, TCE was detected at 2.02 ug/m^3, and 1,2-DCA was detected at 0.493 ug/m^3. No VOCs were detected in the outdoor ambient air or from the second floor of the house. These results do not confirm the efficacy of the mitigation system, but also suggest that VOCs detected in the residence have not entered through the vapor migration pathway.

2.5.3 Regional Sampling - February 2018

DEP periodically obtains multiple media samples from residences located in the vicinity of the site. The locations of selected residences are illustrated on Figure 2-5. Previous sampling events and locations for

February 2016 include 30 Brennan Road (indoor air, outdoor air, and aqueous sump), 324 Park Drive West (indoor air, aqueous sump), 338 Park Drive West (indoor air, outdoor air, aqueous sump), and 2511 Mountain View Drive (indoor air). Additional sampling was performed in April 2016 at 77 Brennan Road (indoor air, aqueous sump).

DEP subsequently obtained indoor air, and outdoor (ambient) air samples as well as opportunity supply well and basement sump aqueous samples from three residences and a commercial structure on February 27 – 28, 2018. The results of this sampling event are summarized in Table 2-6. The sampled locations and results include the following.

2503 Mountain View Drive: Indoor air and outdoor air was sampled at a commercial greenhouse, and an aqueous sample was obtained from the irrigation well. The well contained multiple site-related VOCs, including TCE at a concentration of 75.2 ug/L. However, no VOCs were detected either within the greenhouse or the outdoor ambient air.

2511 Mountain View Drive (indoor air, outdoor air): trans-1,2-DCE was detected in the first and second floors of the residence at concentrations of 4.84 ug/m^3 and 7.25 ug/m^3, respectively. No VOCs were detected in the outdoor ambient air.

338 Park Drive West (indoor air, outdoor air, sump): 1,1,1-TCA was detected in two basement samples and the first floor of the residence at concentrations of 4.38 ug/m^3, 4.55 ug/m^3, and 3.55 ug/m^3, respectively. PCE was detected in the same samples at concentrations of 2.48 ug/m^3, 3.03 ug/m^3, and 2.20 ug/m^3. No VOCs were detected in either the outdoor ambient air or in the basement sump water.

77 Brennan Road (indoor air, outdoor air, sump): No VOCs were detected in the residence, in the outdoor ambient air, or in the basement sump water.

2.6 INDOOR AIR QUALITY (IAQ) MITIGATION – TASK 4201

The results of the indoor air sampling indicated that the two residences located at 65 Brennan Road and 85 Brennan Road were sufficiently impacted by the vapor intrusion (VI) of VOCs from the underlying groundwater plume to require mitigation measures. Tetra Tech subcontracted OBAR Systems, Inc. (OBAR) through a competitive bidding process to inspect and evaluate each residence, and design and install indoor air mitigation systems customized to the construction of the house.

2.6.1 65 Brennan Road

The residence located at 65 Brennan Road is a relatively new structure that was constructed with a passive radon gas mitigation system in the slab. Previous routine indoor air sampling conducted by DEP detected

the presence of site-related VOCs in the indoor air that indicated that the passive system was not sufficiently reducing the risks created by the vapor intrusion of the VOCs.

On May 14, 2018, OBAR retrofitted the passive radon system with an exhaust fan and associated equipment (including sump covers, subslab vapor pins, and electrical modifications) to convert the existing structure into an active VI mitigation system. The exhaust was plumbed into the radon system's existing vent pipe. Upon activation of the fan, a septic odor was noted in the house and traced to a bath drain. Further inspection revealed that when constructed, the bath drain had been incorrectly vented into the exhaust pipe for the radon system. This issue prevented the activation of the vapor mitigation system. A daily log and photo journal of these activities were constructed by DEP, and are included in Appendix B.

On March 14, 2019, OBAR modified the vapor intrusion system through the installation of a dedicated exhaust pipe that vents the VOC vapors into the ambient air at a height above the roof level of the house. The construction and subslab vacuum verification readings are documented in an OBAR email and photo journal included in Appendix B.

2.6.2 84 Brennan Road

The residence at 84 Brennan Road is a two-story structure with a large basement area and crawlspace. OBAR inspected the residence and performed subslab vacuum diagnostic testing on September 28, 2018 to obtain the data needed to design the vapor intrusion mitigation system. The diagnostic report and design plan are included in Appendix C.

OBAR installed the mitigation system on December 10, 2018. A single suction point system is paired with an externally mounted fan to serve the main basement area. Two sump pits (one in the basement and one in the crawl space) were sealed and fitted with dranjers (a sump seal that allows water to drain into the sump but restricts vapor from migrating out of the sump). The perimeter joint in the crawl space was partially sealed. The system design included an option for withdrawing subsurface vapor from the crawl space, but due to the impermeable nature of the clayey soil this option was not chosen pending the results of post-mitigation sampling.

3.0 RESULTS AND CONCLUSIONS

The results of the field investigation conducted since the completion of the Site Characterization Report (Tetra Tech, 2015) and the revisions and updates to the conceptual site model (CSM) that result from this additional data are discussed in this section.

3.1 65 BRENNAN ROAD

Additional data were acquired for the soil, vapor, and aqueous media. Previous data confirmed the existence of several VOC source areas in the soil. These additional data were collected to refine the nature and extent of these VOCs in the media and to begin preliminary discussions concerning the volume of contaminated media and potential remedial alternatives.

3.1.1 Soil

The additional subsurface soil borings were drilled in January 2017 and June 2018. The cumulative (including July 2015) results of the subsurface soil sampling program are illustrated in Figures 2-3 and 2-4. These results indicate that VOC contamination exceeding various screening criteria are widespread across the site, including two detections of TCE that exceed their MSC for Residential Direct Contact (131,000 ug/kg at boring B-100 and 73,200 ug/kg at boring D/E-100) at depths of 7 and 6.5 feet bgs, respectively. These samples were obtained near the soil/bedrock interface and indicate that where disposed, the VOCs have migrated vertically through the complete soil section. In addition to the Residential Direct Contact screening, the cumulative results of the soil borings indicate that the following VOCs exceed MSC screening criteria for the soil-to-groundwater migration pathway in at least one sample.

- TCE • 1,1,1-TCA • cis -1,2-DCE
- PCE • 1,1-DCE • 1,2,4-Trimethylbenzene

The presence of distinct or isolated hot-spots are difficult to delineate based on the lateral distribution and density of the soil borings. However, these borings were located to confirm the nature of VOC contamination defined by the passive soil gas (PSG) investigation conducted during the 2015 field work that did clearly identify VOC hot-spots (the results of the PSG investigation are included as Appendix D). Therefore, the lateral extent of the contamination has been delineated by the PSG investigation and the vertical extent has been defined and the nature of contamination has been quantified through the performance of the soil boring investigations. The lateral spacing of both the PSG samplers and the soil borings, however, do not completely bound the lateral extent of the contamination. Additional delineation is suggested prior to any remedial action.

3.1.2 Soil Gas

Multiple soil vapor probes were installed to quantify the nature of the soil gas contamination detected by the PSG investigation and to assist in the interpretation of the residential vapor intrusion investigation. The results of the soil gas sampling are illustrated in Figure 2-2 and presented in Table 2-3. Exceedances of the screening values for near-source soil gas were detected at SG-1 and SG-3. The exceedance of screening criteria at SG-4 is discussed in Section 3.2.

The VOC exceedances in the soil gas correspond to the highest VOC concentrations detected during the PSG investigation and the compounds are similar to those detected in the soil, with the addition of a vinyl chloride exceedance at SG-3. Due to its volatility, vinyl chloride typically occurs as a gas under normal atmospheric conditions, so its presence in the soil gas and its absence in other media is not considered unusual.

3.1.3 Aqueous Perched Groundwater

The aqueous samples obtained from the soil vapor probes did not contain highly elevated concentrations of VOCs except for the samples obtained from SG-3. A July 2018 aqueous sample contained TCE at a concentration of 580 ug/L, which exceeds the groundwater screening standard for VI of 9 ug/L. A November 2019 sample contained screening exceedances for TCE at 1,200 ug/L, PCE at 161 ug/L, and vinyl chloride at 2.7 ug/L. These results confirm the presence of a significant source area and indicate that contaminated groundwater is forming at this location through the infiltration of precipitation through the contaminated soil.

3.1.4 Discussion

The presence and elevated concentrations of VOCs in the soil and perched groundwater confirm that the former Schulberger Farm is the primary (if not sole) source of the contamination creating the Nockamixon TCE groundwater plume. VOC contamination in the soil is widespread and vertically exists through the soil column to the top of bedrock. Three hot-spots were identified through the PSG investigation and confirmed by the sampling of subsurface soils within the hot-spots.

The most highly contaminated soil and most of the VOC soil MSC exceedances are located near monitoring well location MW-1 and in the adjacent fields located to the east, and immediately west of the driveway for 77 Brennan Road. This general area was identified as a former drum staging area and an area of ground disturbance on historic aerial photographs. A second concentrated area of soil contamination was detected near monitoring well location MW-3, which is located generally near a second drum staging area identified by the aerial photographs. A third area of soil contamination was detected in the northwest portion of the project area near boring location E-700 (Figure 2-1), which does not correspond to any suspected source location.

The subsurface soil data also suggest that the lateral extent of significant contamination is not yet bounded, and that VOC exceedances of various screening criteria (especially the soil-to-groundwater migration pathway) may still not be adequately defined to the accuracy required for a remedial action.

3.2 84 BRENNAN ROAD

The discovery of the vapor intrusion issue at 84 Brennan Road prompted additional investigation at this location to determine whether the VOCs causing the issue were indicative of another source area. In addition, soil gas points were installed to obtain active soil gas samples along the more distant off-site properties to the west (along Park Road West) and to the south (along Mountain View Road) so that, when combined with indoor air sampling, these locations could be evaluated for potential vapor intrusion concerns.

A multi-medium sampling and analysis program was conducted at 84 Brennan Road. Soil gas screening samples, shallow soil samples, aqueous seep samples, and surface water samples were collected. The results of the investigation are illustrated on Figure 2-1.

The soil gas readings were recorded using a PID with a detection limit of parts per billion, but the readings are semi-quantitative and do not identify the VOCs that are present or their actual concentrations. The results of this survey indicate that elevated PID readings were consistently recorded within the northeast half of the property, and significantly lower to no elevated PID readings were recorded within the southwest half of the property.

Shallow soil samples were analyzed for VOCs from two locations. One sample was obtained from a depth of 0.75 – 1.0 feet at the southeastern corner of the property, where the second-highest PID reading (10,400 ppb at location 84-10) was obtained. No VOCs were detected in this soil sample. A second sample was obtained from a depth of 0.5 – 1.0 feet along the northwestern border of the investigation area, where an isolated and low PID reading (310 ppb at location 84-22) was obtained within a larger sector of no other elevated PID readings. No VOCs were detected in this soil sample.

Aqueous seep samples were analyzed for VOCs from two locations. One sample was obtained from the same location at 84-10 where a soil sample was obtained. No VOCs were detected in this seep sample. A second seep sample was obtained from the location where the highest PID reading was detected (11,300 ppb at location 84-4). No VOCs were detected in this seep sample.

Two surface water samples were obtained from an ephemeral pond located near the center of the investigation area, including one from the eastern side of the pond and one from the western side. It is not clear if this pond exists due to the discharge of shallow groundwater during periods of an elevated water table or is created by ponded seasonal precipitation that accumulates due to the low permeability of the surface soil. One VOC was detected from the eastern sample. Toluene was detected at a concentration of

11.7 ug/L. Toluene is a common and widespread VOC that is often detected at low concentrations, and this detection is not considered to be necessarily related to the detections of chlorinated VOCs in the residential indoor air at this property.

3.2.1 Discussion

The presence of VOCs in the soil gas at the 84 Brennan Road property and the absence of VOCs in the soil or aqueous media suggest that the soil gas and vapor intrusion issues are caused by the migration of contaminated groundwater from the source areas and the partitioning of the VOCs from the aqueous phase into the vapor phase. Due to the residential structure's location adjacent to the source areas, the groundwater migrating through this property is sufficiently contaminated to create the vapor intrusion problem that was detected and mitigated at the residence.

3.3 MOUNTAIN VIEW DRIVE

As discussed in Section 2.0, indoor air and outdoor air samples and aqueous samples from an irrigation well and a watered-out soil vapor probe were obtained from a commercial greenhouse at 2503 Mountain View Drive. The irrigation well contained multiple site-related VOCs, but no VOCs were detected from the aqueous sample obtained from the soil vapor probe or from within the indoor or outdoor air. VOCs were detected in the indoor air from an adjacent residence located at 2511 Mountain View Drive, but the low concentrations in the groundwater led DEP to conclude that these were not site-related detections.

3.3.1 Discussion

The presence of site-related VOCs in the bedrock groundwater along Mountain View Drive indicates that this area is impacted by the site but are not indicative of a nearby source area.

3.4 PARK DRIVE WEST

As discussed in Section 2.0, indoor air, outdoor air, and basement sump samples were obtained from the residence located at 338 Park Drive West. The site-related VOCs 1,1,1-TCA and PCE were detected in basement samples and the first floor of the residence. The 1,1,1-TCA did not exceed the DEP Site-Specific Vapor Intrusion Indoor Air Screening Value. The PCE did exceed this screening value, but the calculated risks associated with the detected concentrations were within acceptable cancer risk ranges and met non-cancer criteria. No VOCs were detected in either the outdoor ambient air or in the basement sump water.

3.4.1 Discussion

The presence of multiple site-related VOCs in the indoor air along Park Drive West indicates that this area is impacted by the site. Although the data do not suggest that a VOC contaminant source exists on the

property or in the immediate area, the groundwater is sufficiently contaminated to result in vapor intrusion impacts, although not to an extent requiring mitigation.

3.5 CONCLUSIONS

3.5.1 Nature and Extent of Source Area

The converging lines of evidence indicate that the source areas of the VOC contamination are confined to the former Schulberger Farm, where widespread VOC contamination detected in the on-site soils has resulted in associated contamination to the on-site and off-site groundwater and soil vapor.

Although the groundwater and the soil vapor at off-site locations have been impacted, all evidence suggests that these problems are caused by the migration of contaminated groundwater from the site, rather than the existence of any off-site sources of contamination.

The subsurface soil samples taken from the hot-spots identified by the PSG investigation indicate the degree to which the soils are contaminated. However, the hot-spots are not fully bounded by non-detections of VOCs in soils and it is possible that the soil existing outside of the soil boring clusters is contaminated to concentrations that are producing groundwater that is contaminated to unacceptable levels.

3.5.2 Rough Estimate of Volume of Contaminated Media

At this time, only a very rough estimate can be made for the volume of contaminated soil that requires remediation. Combining the subsurface analytical data with the lateral extent of the PSG hot-spots suggests that the lateral extent of contamination exceeding MSCs is approximately 2,200 yds^2, but this estimate is highly conservative in assuming that all the soil located between the soil boring exceedances is similarly contaminated, but it also assumes that no soil located laterally beyond the last MSC exceedance requires remediation. A further delineation of the lateral extent of VOCs could potentially either reduce the volume of soil contamination into smaller isolated hot-spots that require remediation, or increase the volume by identifying additional MSC exceedances beyond the bounds of the current data.

Because the soil boring program indicated that the most highly-contaminated soil is encountered at the interface between the soil and bedrock, it is likely that any soil remediation will have to address the entire vertical column of soil between the ground surface and the top of bedrock. Assuming a lateral extent of 2,200 yds^2 and a “typical” site soil thickness of 6 feet (2 yards), a very rough estimate for the total volume of soil contaminated to concentrations above MSCs is 4,400 yds^3.

3.5.3 Preliminary Discussion of Potential Remedial Technologies

Only a general discussion of potential remedial technologies can be discussed with the data available at this time. The potentially applicable options include the following.

Soil

- Soil excavation would directly remove the contaminated soil from the site.
- Soil vapor extraction (SVE) could remove the site contaminants from the soil via the vapor phase. The efficacy of this option would greatly depend on the permeability of the soil in the vadose zone.
- Thermal treatment technologies could remove the VOCs from the soil by driving them into the vapor phase, where they could be removed by vapor remediation technologies. This technology would be logistically difficult due to the proximity of residential structures, and given the lateral extent of contamination, this technology would also likely be prohibitively expensive.
- Chemical oxidation is not likely to be feasible due to the demonstrated poor aqueous permeability of the soil. The presence of nearby potable supply wells also makes the introduction of these chemicals into the subsurface logistically challenging.
- Soil mixing might alleviate the permeability issue and enhance the contact area of the soil with a selected remedial material such as permanganate for chemical oxidation.

Groundwater

- Groundwater extraction and ex-situ treatment would remove contaminated groundwater from the aquifer and if the well network is properly designed, could potentially contain the groundwater plume to the immediate vicinity of the source area. Extracting the groundwater without negatively impacting the supply available to the nearby residential potable wells represents a logistical challenge.
- Chemical oxidation of groundwater is not likely to be feasible for the same reason discussed under the soil technologies. The presence of nearby potable supply wells makes the introduction of any chemical into the aquifer a logistical challenge that may negatively impact the potable water supply of the residents.

  Bioremediation of either the soil or groundwater media would be logistically challenging because the typical anaerobic and reducing conditions required for the dehalogenation of the chlorinated VOCs are either not known to be present, may be difficult to create, and either way will likely be difficult to maintain. Additional sampling is required to determine if the existing environment is favorable (including very low

to no oxygen, a neutral pH, and a strongly negative ORP) and if the required bacterial species are present or would require introduction to the subsurface.

Vapor Intrusion

- Subslab depressurization has proven to be an effective technology for the mitigation of the impacts caused by vapor intrusion. This technology can be applied to other structures if additional vapor intrusion issues are detected.

3.5.4 Suggested Additional Investigation

Additional subsurface soil samples in the vicinity of the hot-spots should be analyzed to determine whether soils located beyond the hot-spots require remediation, and to determine if all the soils within the hot-spots require remediation or if the hot-spots can be subdivided into smaller parcels.

Vacuum tests should be performed to determine the potential efficacy of SVE for the soil medium.

The potential for matrix diffusion of the VOCs into the shallow bedrock should be investigated at one or more of the hot-spot source areas. The presence of VOC diffusion into the bedrock matrix could create a significant residual source of contamination and prolong the time required for site remediation, even if the overlying contaminated soils are removed.

An aquifer test should be conducted (ideally at the MW-1 well cluster location) to determine the zone of influence created by withdrawing the most highly-contaminated groundwater from the shallow bedrock, which could potentially both laterally and vertically capture the plume and contain it to near the source area. The test would also evaluate the degree to which any groundwater withdrawal may impact the supply available to the nearby residential private wells.

TABLES

TABLE 2-1
SOIL DATA SUMMARY
DATA SUMMARY OF VOLATILE ORGANIC COMPOUND RESULTS
JANUARY 2017, JUNE-AUGUST 2018, AND SEPTEMBER 2019
NOCKAMIXON STATE PARK, BUCKS COUNTY, PENNSYLVANIA

Sampling Location:	**A 25**		**A 25**		**A/B 150**		**A/B 150**		**B_Rd 100**		**B_Rd 100**		**D (-25)**		**D 25**		**D 25**		**D/E 100**	
Sample Number:	**A 25 @ 4'**		**A 25 C1 @ 4'**		**A/B 150 @ 4.5'**		**A/B 150 C1 @ 4.5'**		**B_Rd 100 @ 6.5'**		**B_Rd 100 C1 @7'**		**D (-25) @4.5'**		**D 25 @ 6'**		**D 25 C1 @ 4.5'**		**D/E 100 @ 5.5'**	
Date Sampled:	**1/25/2017**		**1/25/2017**		**1/25/2017**		**1/25/2017**		**1/25/2017**		**1/25/2017**		**1/25/2017**		**1/25/2017**		**1/25/2017**		**1/25/2017**	
Duplicate of:																				
Volaltiles	**ug/kg**		**ug/kg**		**ug/kg**		**ug/kg**		**ug/kg**		**ug/kg**		**ug/kg**		**ug/kg**		**ug/kg**		**ug/kg**	
1,1,1,2-Tetrachloroethane	45.4	U	58	U	57.4	U	70.8	U	72.6	U	59.4	U	47.3	U	76.9	U	49.4	U	59	U
1,1,1-Trichloroethane	1810		58	U	368		539		72.6	U	1140		47.3	U	76.9	U	116		2210	
1,1,2,2-Tetrachloroethane	45.4	U	58	U	57.4	U	70.8	U	72.6	U	59.4	U	47.3	U	76.9	U	49.4	U	59	U
1,1,2-Trichloroethane	45.4	U	58	U	57.4	U	70.8	U	72.6	U	59.4	U	47.3	U	76.9	U	49.4	U	59	U
1,1-Dichloroethane	45.4	U	58	U	57.4	U	70.8	U	72.6	U	59.4	U	47.3	U	76.9	U	49.4	U	59	U
1,1-Dichloroethene	104		58	U	57.4	U	70.8	U	72.6	U	81.3		47.3	U	76.9	U	49.4	U	287	
1,1-Dichloropropene	45.4	U	58	U	57.4	U	70.8	U	72.6	U	59.4	U	47.3	U	76.9	U	49.4	U	59	U
1,2,3-Trichlorobenzene	45.4	U	58	U	57.4	U	70.8	U	72.6	U	59.4	U	47.3	U	76.9	U	49.4	U	59	U
1,2,3-Trichloropropane	45.4	U	58	U	57.4	U	70.8	U	72.6	U	59.4	U	47.3	U	76.9	U	49.4	U	59	U
1,2,4-Trichlorobenzene	45.4	U	58	U	57.4	U	70.8	U	72.6	U	59.4	U	47.3	U	76.9	U	49.4	U	59	U
1,2,4-Trimethylbenzene	4150		58	U	57.4	U	70.8	U	72.6	U	59.4	U	47.3	U	2330		49.4	U	3720	
1,2-Dibromo-3-chloropropane	45.4	U	58	U	57.4	U	70.8	U	72.6	U	59.4	U	47.3	U	76.9	U	49.4	U	59	U
1,2-Dibromoethane	45.4	U	58	U	57.4	U	70.8	U	72.6	U	59.4	U	47.3	U	76.9	U	49.4	U	59	U
1,2-Dichlorobenzene	45.4	U	58	U	57.4	U	70.8	U	72.6	U	59.4	U	47.3	U	76.9	U	49.4	U	59	U
1,2-Dichloroethane	45.4	U	58	U	57.4	U	70.8	U	72.6	U	59.4	U	47.3	U	76.9	U	49.4	U	59	U
1,2-Dichloropropane	45.4	U	58	U	57.4	U	70.8	U	72.6	U	59.4	U	47.3	U	76.9	U	49.4	U	59	U
1,3,5-Trimethylbenzene	45.4	U	58	U	57.4	U	70.8	U	72.6	U	59.4	U	47.3	U	1460		49.4	U	59	U
1,3-Dichlorobenzene	45.4	U	58	U	57.4	U	70.8	U	72.6	U	59.4	U	47.3	U	76.9	U	49.4	U	59	U
1,3-Dichloropropane	45.4	U	58	U	57.4	U	70.8	U	72.6	U	59.4	U	47.3	U	76.9	U	49.4	U	59	U
1,4-Dichlorobenzene	45.4	U	58	U	57.4	U	70.8	U	72.6	U	59.4	U	47.3	U	76.9	U	49.4	U	59	U
2,2-Dichloropropane	45.4	U	58	U	57.4	U	70.8	U	72.6	U	59.4	U	47.3	U	76.9	U	49.4	U	59	U
2-Hexanone	227	U	290	U	287	U	354	U	363	U	297	U	237	U	384	U	247	U	295	U
4-Isopropyltoluene	202		58	U	57.4	U	70.8	U	72.6	U	59.4	U	47.3	U	312		49.4	U	609	
Acetone	227	U	290	U	287	U	354	U	363	U	297	U	237	U	384	U	247	U	295	U
Benzene	45.4	U	58	U	57.4	U	70.8	U	72.6	U	59.4	U	47.3	U	76.9	U	49.4	U	59	U
Bromobenzene	45.4	U	58	U	57.4	U	70.8	U	72.6	U	59.4	U	47.3	U	76.9	U	49.4	U	59	U
Bromochloromethane	NA		NA		NA		NA		NA		NA		NA		NA		NA		NA	
Bromodichloromethane	45.4	U	58	U	57.4	U	70.8	U	72.6	U	59.4	U	47.3	U	76.9	U	49.4	U	59	U
Bromoform	45.4	U	58	U	57.4	U	70.8	U	72.6	U	59.4	U	47.3	U	76.9	U	49.4	U	59	U
Bromomethane	45.4	U	58	U	57.4	U	70.8	U	72.6	U	59.4	U	47.3	U	76.9	U	49.4	U	59	U
Carbon Disulfide	45.4	U	58	U	57.4	U	70.8	U	72.6	U	59.4	U	47.3	U	76.9	U	49.4	U	59	U
Carbon Tetrachloride	45.4	U	58	U	57.4	U	70.8	U	72.6	U	59.4	U	47.3	U	76.9	U	49.4	U	59	U
Chlorobenzene	45.4	U	58	U	57.4	U	70.8	U	72.6	U	59.4	U	47.3	U	76.9	U	49.4	U	59	U
Chloroethane	45.4	U	58	U	57.4	U	70.8	U	72.6	U	59.4	U	47.3	U	76.9	U	49.4	U	59	U
Chloroform	45.4	U	58	U	57.4	U	70.8	U	72.6	U	59.4	U	47.3	U	76.9	U	49.4	U	59	U
Chloromethane	45.4	U	58	U	57.4	U	70.8	U	72.6	U	59.4	U	47.3	U	76.9	U	49.4	U	59	U
cis-1,2-Dichloroethene	84.7		58	U	824		705		72.6	U	662		47.3	U	76.9	U	186		3600	
cis-1,3-Dichloropropene	45.4	U	58	U	57.4	U	70.8	U	72.6	U	59.4	U	47.3	U	76.9	U	49.4	U	59	U
Dibromochloromethane	45.4	U	58	U	57.4	U	70.8	U	72.6	U	59.4	U	47.3	U	76.9	U	49.4	U	59	U
Dibromomethane	45.4	U	58	U	57.4	U	70.8	U	72.6	U	59.4	U	47.3	U	76.9	U	49.4	U	59	U
Dichlorodifluoromethane	45.4	U	58	U	57.4	U	70.8	U	72.6	U	59.4	U	47.3	U	76.9	U	49.4	U	59	U
Ethylbenzene	370		58	U	57.4	U	70.8	U	72.6	U	59.4	U	47.3	U	326		49.4	U	128	
Hexachlorobutadiene	45.4	U	58	U	57.4	U	70.8	U	72.6	U	59.4	U	47.3	U	76.9	U	49.4	U	59	U

TABLE 2-1
SOIL DATA SUMMARY
DATA SUMMARY OF VOLATILE ORGANIC COMPOUND RESULTS
JANUARY 2017, JUNE-AUGUST 2018, AND SEPTEMBER 2019
NOCKAMIXON STATE PARK, BUCKS COUNTY, PENNSYLVANIA

Sampling Location:	**A 25**		**A 25**		**A/B 150**		**A/B 150**		**B_Rd 100**		**B_Rd 100**		**D (-25)**		**D 25**		**D 25**		**D/E 100**	
Sample Number:	**A 25 @ 4'**		**A 25 C1 @ 4'**		**A/B 150 @ 4.5'**		**A/B 150 C1 @ 4.5'**		**B_Rd 100 @ 6.5'**		**B_Rd 100 C1 @7'**		**D (-25) @4.5'**		**D 25 @ 6'**		**D 25 C1 @ 4.5'**		**D/E 100 @ 5.5'**	
Date Sampled:	**1/25/2017**		**1/25/2017**		**1/25/2017**		**1/25/2017**		**1/25/2017**		**1/25/2017**		**1/25/2017**		**1/25/2017**		**1/25/2017**		**1/25/2017**	
Duplicate of:																				
Volaltiles	**ug/kg**		**ug/kg**		**ug/kg**		**ug/kg**		**ug/kg**		**ug/kg**		**ug/kg**		**ug/kg**		**ug/kg**		**ug/kg**	
Isopropylbenzene	818		58	U	57.4	U	70.8	U	166		472		47.3	U	102		49.4	U	616	
m,p-Xylene	90.8	U	116	U	115	U	142	U	145	U	119	U	94.7	U	555		98.7	U	118	U
MEK	227	U	290	U	287	U	354	U	363	U	297	U	237	U	384	U	247	U	295	U
Methyl Tert-Butyl Ether	45.4	U	58	U	57.4	U	70.8	U	72.6	U	59.4	U	47.3	U	76.9	U	49.4	U	59	U
Methylene Chloride	45.4	U	58	U	57.4	U	70.8	U	72.6	U	59.4	U	47.3	U	76.9	U	49.4	U	59	U
MIBK	227	U	290	U	287	U	354	U	363	U	297	U	237	U	384	U	247	U	295	U
Naphthalene	45.4	U	58	U	57.4	U	70.8	U	72.6	U	59.4	U	47.3	U	324		49.4	U	429	
n-Butylbenzene	64.5		58	U	57.4	U	70.8	U	72.6	U	59.4	U	47.3	U	76.9	U	49.4	U	604	
n-Propylbenzene	1050		58	U	57.4	U	70.8	U	72.6	U	59.4	U	47.3	U	287		49.4	U	990	
o-Chlorotoluene	45.4	U	58	U	57.4	U	70.8	U	72.6	U	59.4	U	47.3	U	76.9	U	49.4	U	59	U
o-Xylene	3960		58	U	57.4	U	70.8	U	72.6	U	806		47.3	U	678		49.4	U	3760	
p-Chlorotoluene	45.4	U	58	U	57.4	U	70.8	U	72.6	U	59.4	U	47.3	U	76.9	U	49.4	U	59	U
PCTFB	45.4	U	58	U	57.4	U	70.8	U	72.6	U	59.4	U	47.3	U	76.9	U	49.4	U	59	U
Sec-Butylbenzene	45.4	U	58	U	57.4	U	70.8	U	72.6	U	59.4	U	47.3	U	163		49.4	U	394	
Styrene	45.4	U	58	U	57.4	U	70.8	U	72.6	U	59.4	U	47.3	U	76.9	U	49.4	U	59	U
t-Butyl alcohol	454	U	580	U	574	U	708	U	726	U	594	U	473	U	769	U	494	U	590	U
tert-Butyl Acetate	227	U	290	U	287	U	354	U	363	U	297	U	237	U	384	U	247	U	295	U
Tert-Butylbenzene	45.4	U	58	U	57.4	U	70.8	U	72.6	U	59.4	U	47.3	U	239		49.4	U	568	
Tetrachloroethene	172000		58	U	1290		4620		72.6	U	8870		47.3	U	106		49.4	U	5630	
Tetrahydrofuran	45.4	U	58	U	57.4	U	70.8	U	72.6	U	59.4	U	47.3	U	76.9	U	49.4	U	59	U
Toluene	45.4	U	58	U	57.4	U	70.8	U	72.6	U	59.4	U	47.3	U	76.9	U	49.4	U	59	U
trans-1,2-Dichloroethene	45.4	U	58	U	57.4	U	70.8	U	72.6	U	59.4	U	47.3	U	76.9	U	49.4	U	64.8	
trans-1,3-Dichloropropene	45.4	U	58	U	57.4	U	70.8	U	72.6	U	59.4	U	47.3	U	76.9	U	49.4	U	59	U
Trichloroethene	20000		58	U	888		516		72.6	U	920		47.3	U	76.9	U	82.7		6980	
Trichlorofluoromethane	45.4	U	58	U	57.4	U	70.8	U	72.6	U	59.4	U	47.3	U	76.9	U	49.4	U	59	U
Vinyl Acetate	45.4	U	58	U	57.4	U	70.8	U	72.6	U	59.4	U	47.3	U	76.9	U	49.4	U	59	U
Chloroethene (vinyl chloride)	45.4	U	58	U	57.4	U	70.8	U	72.6	U	59.4	U	47.3	U	76.9	U	49.4	U	59	U

TABLE 2-1
SOIL DATA SUMMARY
DATA SUMMARY OF VOLATILE ORGANIC COMPOUND RESULTS
JANUARY 2017, JUNE-AUGUST 2018, AND SEPTEMBER 2019
NOCKAMIXON STATE PARK, BUCKS COUNTY, PENNSYLVANIA

Sampling Location:	**D/E 100**		**F/G 250**		**F/G 250**		**G 175**		**G 175**		**W/X 650**		**W/X 650**		**X 750**		**X 750**		**MW-3**	
Sample Number:	**D/E 100 C1 @ 6.5'**		**F/G 250 @ 4.5'**		**F/G 250 C1 @ 4.5'**		**G 175 @ 4'**		**G 175 C1 @ 3'**		**W/X 650 @ 7'**		**W/X 650 C1 @ 5.5'**		**X 750 @ 9.5'**		**X 750 C1 @ 11.5'**		**MW-3 600 @ 4.5'**	
Date Sampled:	**1/25/2017**		**1/26/2017**		**1/26/2017**		**1/25/2017**		**1/25/2017**		**1/26/2017**		**1/26/2017**		**1/26/2017**		**1/26/2017**		**1/26/2017**	
Duplicate of:																				
Volaltiles	**ug/kg**		**ug/kg**		**ug/kg**		**ug/kg**		**ug/kg**		**ug/kg**		**ug/kg**		**ug/kg**		**ug/kg**		**ug/kg**	
1,1,1,2-Tetrachloroethane	96	U	59.5	U	62.8	U	60.2	U	64.3	U	53.4	U	58.4	U	61.2	U	58.7	U	63.6	U
1,1,1-Trichloroethane	22600		59.5	U	62.8	U	60.2	U	64.3	U	53.4	U	58.4	U	61.2	U	167		63.6	U
1,1,2,2-Tetrachloroethane	96	U	59.5	U	62.8	U	60.2	U	64.3	U	53.4	U	58.4	U	61.2	U	58.7	U	63.6	U
1,1,2-Trichloroethane	96	U	59.5	U	62.8	U	60.2	U	64.3	U	53.4	U	58.4	U	61.2	U	58.7	U	63.6	U
1,1-Dichloroethane	96	U	59.5	U	62.8	U	60.2	U	64.3	U	53.4	U	58.4	U	61.2	U	58.7	U	63.6	U
1,1-Dichloroethene	1420		59.5	U	62.8	U	60.2	U	64.3	U	53.4	U	58.4	U	61.2	U	225		63.6	U
1,1-Dichloropropene	96	U	59.5	U	62.8	U	60.2	U	64.3	U	53.4	U	58.4	U	61.2	U	58.7	U	63.6	U
1,2,3-Trichlorobenzene	96	U	59.5	U	62.8	U	60.2	U	64.3	U	53.4	U	58.4	U	61.2	U	58.7	U	63.6	U
1,2,3-Trichloropropane	96	U	59.5	U	62.8	U	60.2	U	64.3	U	53.4	U	58.4	U	61.2	U	58.7	U	63.6	U
1,2,4-Trichlorobenzene	96	U	59.5	U	62.8	U	60.2	U	64.3	U	53.4	U	58.4	U	61.2	U	58.7	U	63.6	U
1,2,4-Trimethylbenzene	43400		59.5	U	62.8	U	60.2	U	64.3	U	53.4	U	58.4	U	61.2	U	58.7	U	63.6	U
1,2-Dibromo-3-chloropropane	96	U	59.5	U	62.8	U	60.2	U	64.3	U	53.4	U	58.4	U	61.2	U	58.7	U	63.6	U
1,2-Dibromoethane	96	U	59.5	U	62.8	U	60.2	U	64.3	U	53.4	U	58.4	U	61.2	U	58.7	U	63.6	U
1,2-Dichlorobenzene	96	U	59.5	U	62.8	U	60.2	U	64.3	U	53.4	U	58.4	U	61.2	U	58.7	U	63.6	U
1,2-Dichloroethane	96	U	59.5	U	62.8	U	60.2	U	64.3	U	53.4	U	58.4	U	61.2	U	58.7	U	63.6	U
1,2-Dichloropropane	96	U	59.5	U	62.8	U	60.2	U	64.3	U	53.4	U	58.4	U	61.2	U	58.7	U	63.6	U
1,3,5-Trimethylbenzene	24200		59.5	U	62.8	U	60.2	U	64.3	U	53.4	U	58.4	U	61.2	U	58.7	U	63.6	U
1,3-Dichlorobenzene	96	U	59.5	U	62.8	U	60.2	U	64.3	U	53.4	U	58.4	U	61.2	U	58.7	U	63.6	U
1,3-Dichloropropane	96	U	59.5	U	62.8	U	60.2	U	64.3	U	53.4	U	58.4	U	61.2	U	58.7	U	63.6	U
1,4-Dichlorobenzene	96	U	59.5	U	62.8	U	60.2	U	64.3	U	53.4	U	58.4	U	61.2	U	58.7	U	63.6	U
2,2-Dichloropropane	96	U	59.5	U	62.8	U	60.2	U	64.3	U	53.4	U	58.4	U	61.2	U	58.7	U	63.6	U
2-Hexanone	480	U	297	U	314	U	301	U	322	U	267	U	292	U	306	U	294	U	318	U
4-Isopropyltoluene	3240		59.5	U	62.8	U	60.2	U	64.3	U	53.4	U	58.4	U	61.2	U	58.7	U	63.6	U
Acetone	480	U	297	U	314	U	301	U	322	U	267	U	292	U	306	U	294	U	318	U
Benzene	96	U	59.5	U	62.8	U	60.2	U	64.3	U	53.4	U	58.4	U	61.2	U	58.7	U	63.6	U
Bromobenzene	96	U	59.5	U	62.8	U	60.2	U	64.3	U	53.4	U	58.4	U	61.2	U	58.7	U	63.6	U
Bromochloromethane	NA		NA		NA		NA		NA		NA		NA		NA		NA		NA	
Bromodichloromethane	96	U	59.5	U	62.8	U	60.2	U	64.3	U	53.4	U	58.4	U	61.2	U	58.7	U	63.6	U
Bromoform	96	U	59.5	U	62.8	U	60.2	U	64.3	U	53.4	U	58.4	U	61.2	U	58.7	U	63.6	U
Bromomethane	96	U	59.5	U	62.8	U	60.2	U	64.3	U	53.4	U	58.4	U	61.2	U	58.7	U	63.6	U
Carbon Disulfide	96	U	59.5	U	62.8	U	60.2	U	64.3	U	53.4	U	58.4	U	61.2	U	58.7	U	63.6	U
Carbon Tetrachloride	96	U	59.5	U	62.8	U	60.2	U	64.3	U	53.4	U	58.4	U	61.2	U	58.7	U	63.6	U
Chlorobenzene	96	U	59.5	U	62.8	U	60.2	U	64.3	U	53.4	U	58.4	U	61.2	U	58.7	U	63.6	U
Chloroethane	96	U	59.5	U	62.8	U	60.2	U	64.3	U	53.4	U	58.4	U	61.2	U	58.7	U	63.6	U
Chloroform	96	U	59.5	U	62.8	U	60.2	U	64.3	U	53.4	U	58.4	U	61.2	U	58.7	U	63.6	U
Chloromethane	96	U	59.5	U	62.8	U	60.2	U	64.3	U	53.4	U	58.4	U	61.2	U	58.7	U	63.6	U
cis-1,2-Dichloroethene	10600		59.5	U	62.8	U	60.2	U	64.3	U	75.9		174		61.2	U	1520		63.6	U
cis-1,3-Dichloropropene	96	U	59.5	U	62.8	U	60.2	U	64.3	U	53.4	U	58.4	U	61.2	U	58.7	U	63.6	U
Dibromochloromethane	96	U	59.5	U	62.8	U	60.2	U	64.3	U	53.4	U	58.4	U	61.2	U	58.7	U	63.6	U
Dibromomethane	96	U	59.5	U	62.8	U	60.2	U	64.3	U	53.4	U	58.4	U	61.2	U	58.7	U	63.6	U
Dichlorodifluoromethane	96	U	59.5	U	62.8	U	60.2	U	64.3	U	53.4	U	58.4	U	61.2	U	58.7	U	63.6	U
Ethylbenzene	34600		59.5	U	62.8	U	60.2	U	64.3	U	53.4	U	58.4	U	61.2	U	58.7	U	63.6	U
Hexachlorobutadiene	96	U	59.5	U	62.8	U	60.2	U	64.3	U	53.4	U	58.4	U	61.2	U	58.7	U	63.6	U

TABLE 2-1
SOIL DATA SUMMARY
DATA SUMMARY OF VOLATILE ORGANIC COMPOUND RESULTS
JANUARY 2017, JUNE-AUGUST 2018, AND SEPTEMBER 2019
NOCKAMIXON STATE PARK, BUCKS COUNTY, PENNSYLVANIA

Sampling Location:	**D/E 100**		**F/G 250**		**F/G 250**		**G 175**		**G 175**		**W/X 650**		**W/X 650**		**X 750**		**X 750**		**MW-3**	
Sample Number:	**D/E 100 C1 @ 6.5'**		**F/G 250 @ 4.5'**		**F/G 250 C1 @ 4.5'**		**G 175 @ 4'**		**G 175 C1 @ 3'**		**W/X 650 @ 7'**		**W/X 650 C1 @ 5.5'**		**X 750 @ 9.5'**		**X 750 C1 @ 11.5'**		**MW-3 600 @ 4.5'**	
Date Sampled:	**1/25/2017**		**1/26/2017**		**1/26/2017**		**1/25/2017**		**1/25/2017**		**1/26/2017**		**1/26/2017**		**1/26/2017**		**1/26/2017**		**1/26/2017**	
Duplicate of:																				
Volaltiles	**ug/kg**		**ug/kg**		**ug/kg**		**ug/kg**		**ug/kg**		**ug/kg**		**ug/kg**		**ug/kg**		**ug/kg**		**ug/kg**	
Isopropylbenzene	4980		59.5	U	62.8	U	60.2	U	64.3	U	53.4	U	58.4	U	61.2	U	58.7	U	63.6	U
m,p-Xylene	40800		119	U	126	U	120	U	129	U	107	U	117	U	122	U	117	U	127	U
MEK	480	U	297	U	314	U	301	U	322	U	267	U	292	U	306	U	294	U	318	U
Methyl Tert-Butyl Ether	96	U	59.5	U	62.8	U	60.2	U	64.3	U	53.4	U	58.4	U	61.2	U	58.7	U	63.6	U
Methylene Chloride	96	U	59.5	U	62.8	U	60.2	U	64.3	U	53.4	U	58.4	U	61.2	U	58.7	U	63.6	U
MIBK	480	U	297	U	314	U	301	U	322	U	267	U	292	U	306	U	294	U	318	U
Naphthalene	3480		59.5	U	62.8	U	60.2	U	64.3	U	53.4	U	58.4	U	61.2	U	58.7	U	63.6	U
n-Butylbenzene	96	U	59.5	U	62.8	U	60.2	U	64.3	U	53.4	U	58.4	U	61.2	U	58.7	U	63.6	U
n-Propylbenzene	8760		59.5	U	62.8	U	60.2	U	64.3	U	53.4	U	58.4	U	61.2	U	58.7	U	63.6	U
o-Chlorotoluene	96	U	59.5	U	62.8	U	60.2	U	64.3	U	53.4	U	58.4	U	61.2	U	58.7	U	63.6	U
o-Xylene	54400		59.5	U	62.8	U	60.2	U	64.3	U	53.4	U	58.4	U	61.2	U	58.7	U	63.6	U
p-Chlorotoluene	96	U	59.5	U	62.8	U	60.2	U	64.3	U	53.4	U	58.4	U	61.2	U	58.7	U	63.6	U
PCTFB	96	U	59.5	U	62.8	U	60.2	U	64.3	U	53.4	U	58.4	U	61.2	U	58.7	U	63.6	U
Sec-Butylbenzene	1980		59.5	U	62.8	U	60.2	U	64.3	U	53.4	U	58.4	U	61.2	U	58.7	U	63.6	U
Styrene	96	U	59.5	U	62.8	U	60.2	U	64.3	U	53.4	U	58.4	U	61.2	U	58.7	U	63.6	U
t-Butyl alcohol	960	U	595	U	628	U	602	U	643	U	534	U	584	U	612	U	587	U	636	U
tert-Butyl Acetate	480	U	297	U	314	U	301	U	322	U	267	U	292	U	306	U	294	U	318	U
Tert-Butylbenzene	3000		59.5	U	62.8	U	60.2	U	64.3	U	53.4	U	58.4	U	61.2	U	58.7	U	63.6	U
Tetrachloroethene	115000		59.5	U	69.4		60.2	U	64.3	U	53.4	U	58.4	U	61.2	U	438		63.6	U
Tetrahydrofuran	96	U	59.5	U	62.8	U	60.2	U	64.3	U	53.4	U	58.4	U	61.2	U	58.7	U	63.6	U
Toluene	146		59.5	U	62.8	U	60.2	U	64.3	U	53.4	U	58.4	U	61.2	U	58.7	U	63.6	U
trans-1,2-Dichloroethene	117		59.5	U	62.8	U	60.2	U	64.3	U	53.4	U	58.4	U	61.2	U	58.7	U	63.6	U
trans-1,3-Dichloropropene	96	U	59.5	U	62.8	U	60.2	U	64.3	U	53.4	U	58.4	U	61.2	U	58.7	U	63.6	U
Trichloroethene	73200		59.5	U	101		65.4		128		57.6		68.1		61.2	U	1310		63.6	U
Trichlorofluoromethane	96	U	59.5	U	62.8	U	60.2	U	64.3	U	53.4	U	58.4	U	61.2	U	58.7	U	63.6	U
Vinyl Acetate	96	U	59.5	U	62.8	U	60.2	U	64.3	U	53.4	U	58.4	U	61.2	U	58.7	U	63.6	U
Chloroethene (vinyl chloride)	96	U	59.5	U	62.8	U	60.2	U	64.3	U	53.4	U	58.4	U	61.2	U	58.7	U	63.6	U

TABLE 2-1
SOIL DATA SUMMARY
DATA SUMMARY OF VOLATILE ORGANIC COMPOUND RESULTS
JANUARY 2017, JUNE-AUGUST 2018, AND SEPTEMBER 2019
NOCKAMIXON STATE PARK, BUCKS COUNTY, PENNSYLVANIA

Sampling Location:	**MW-3**		**MW-3**		**MW-3**		**MW-3**		**A 200 @4'**		**B 0 @ 6.5'**		**B 125 @ 7'**		**E 275 @ 4.5'**	
Sample Number:	**MW-3 600 C1 @ 5'**		**MW-3 600 C1 @ 5' Duplicate**		**MW-3 700 @ 4.5'**		**MW-3 700 C1 @ 5'**		**A 200 @4'**		**B 0 @ 6.5'**		**B 125 @ 7'**		**E 275 @ 4.5'**	
Date Sampled:	**1/26/2017**		**1/26/2017**		**1/26/2017**		**1/26/2017**		**6/11/2018**		**6/11/2018**		**6/11/2018**		**6/11/2018**	
Duplicate of:			**MW-3 600 C1 @ 5'**													
Volaltiles	**ug/kg**		**ug/kg**		**ug/kg**		**ug/kg**		**ug/kg**		**ug/kg**		**ug/kg**		**ug/kg**	
1,1,1,2-Tetrachloroethane	57.4	U	59.4	U	57.2	U	57.8	U	37.1	U	59.7	U	42.4	U	47.3	U
1,1,1-Trichloroethane	57.4	U	59.4	U	57.2	U	57.8	U	37.1	U	59.7	U	808		47.3	U
1,1,2,2-Tetrachloroethane	57.4	U	59.4	U	57.2	U	57.8	U	37.1	U	59.7	U	42.4	U	47.3	U
1,1,2-Trichloroethane	57.4	U	59.4	U	57.2	U	57.8	U	37.1	U	59.7	U	42.4	U	47.3	U
1,1-Dichloroethane	57.4	U	59.4	U	57.2	U	57.8	U	37.1	U	59.7	U	42.4	U	47.3	U
1,1-Dichloroethene	57.4	U	59.4	U	57.2	U	57.8	U	37.1	U	59.7	U	115		47.3	U
1,1-Dichloropropene	57.4	U	59.4	U	57.2	U	57.8	U	37.1	U	59.7	U	42.4	U	47.3	U
1,2,3-Trichlorobenzene	57.4	U	59.4	U	57.2	U	57.8	U	37.1	U	59.7	U	42.4	U	47.3	U
1,2,3-Trichloropropane	57.4	U	59.4	U	57.2	U	57.8	U	37.1	U	59.7	U	42.4	U	47.3	U
1,2,4-Trichlorobenzene	57.4	U	59.4	U	57.2	U	57.8	U	37.1	U	59.7	U	42.4	U	47.3	U
1,2,4-Trimethylbenzene	57.4	U	59.4	U	57.2	U	57.8	U	37.1	U	59.7	U	42.4	U	47.3	U
1,2-Dibromo-3-chloropropane	57.4	U	59.4	U	57.2	U	57.8	U	37.1	U	59.7	U	42.4	U	47.3	U
1,2-Dibromoethane	57.4	U	59.4	U	57.2	U	57.8	U	37.1	U	59.7	U	42.4	U	47.3	U
1,2-Dichlorobenzene	57.4	U	59.4	U	57.2	U	57.8	U	37.1	U	59.7	U	42.4	U	47.3	U
1,2-Dichloroethane	57.4	U	59.4	U	57.2	U	57.8	U	37.1	U	59.7	U	42.4	U	47.3	U
1,2-Dichloropropane	57.4	U	59.4	U	57.2	U	57.8	U	37.1	U	59.7	U	42.4	U	47.3	U
1,3,5-Trimethylbenzene	57.4	U	59.4	U	57.2	U	57.8	U	37.1	U	59.7	U	42.4	U	47.3	U
1,3-Dichlorobenzene	57.4	U	59.4	U	57.2	U	57.8	U	37.1	U	59.7	U	42.4	U	47.3	U
1,3-Dichloropropane	57.4	U	59.4	U	57.2	U	57.8	U	37.1	U	59.7	U	42.4	U	47.3	U
1,4-Dichlorobenzene	57.4	U	59.4	U	57.2	U	57.8	U	37.1	U	59.7	U	42.4	U	47.3	U
2,2-Dichloropropane	57.4	U	59.4	U	57.2	U	57.8	U	37.1	U	59.7	U	42.4	U	47.3	U
2-Hexanone	287	U	297	U	286	U	289	U	185	U	299	U	212	U	237	U
4-Isopropyltoluene	57.4	U	59.4	U	57.2	U	57.8	U	37.1	U	59.7	U	42.4	U	47.3	U
Acetone	287	U	297	U	286	U	289	U	185	U	299	U	212	U	237	U
Benzene	57.4	U	59.4	U	57.2	U	57.8	U	37.1	U	59.7	U	42.4	U	47.3	U
Bromobenzene	57.4	U	59.4	U	57.2	U	57.8	U	37.1	U	59.7	U	42.4	U	47.3	U
Bromochloromethane	NA		NA		NA		NA		37.1	U	59.7	U	42.4	U	47.3	U
Bromodichloromethane	57.4	U	59.4	U	57.2	U	57.8	U	37.1	U	59.7	U	42.4	U	47.3	U
Bromoform	57.4	U	59.4	U	57.2	U	57.8	U	74.2	U	119	U	84.8	U	94.6	U
Bromomethane	57.4	U	59.4	U	57.2	U	57.8	U	37.1	U	59.7	U	42.4	U	47.3	U
Carbon Disulfide	57.4	U	59.4	U	57.2	U	57.8	U	37.1	U	59.7	U	42.4	U	47.3	U
Carbon Tetrachloride	57.4	U	59.4	U	57.2	U	57.8	U	37.1	U	59.7	U	42.4	U	47.3	U
Chlorobenzene	57.4	U	59.4	U	57.2	U	57.8	U	74.2	U	119	U	84.8	U	94.6	U
Chloroethane	57.4	U	59.4	U	57.2	U	57.8	U	37.1	U	59.7	U	42.4	U	47.3	U
Chloroform	57.4	U	59.4	U	57.2	U	57.8	U	37.1	U	59.7	U	42.4	U	47.3	U
Chloromethane	57.4	U	59.4	U	57.2	U	57.8	U	37.1	U	59.7	U	42.4	U	47.3	U
cis-1,2-Dichloroethene	57.4	U	59.4	U	57.2	U	57.8	U	62.9		59.7	U	4320		48.4	
cis-1,3-Dichloropropene	57.4	U	59.4	U	57.2	U	57.8	U	37.1	U	59.7	U	42.4	U	47.3	U
Dibromochloromethane	57.4	U	59.4	U	57.2	U	57.8	U	37.1	U	59.7	U	42.4	U	47.3	U
Dibromomethane	57.4	U	59.4	U	57.2	U	57.8	U	37.1	U	59.7	U	42.4	U	47.3	U
Dichlorodifluoromethane	57.4	U	59.4	U	57.2	U	57.8	U	37.1	U	59.7	U	42.4	U	47.3	U
Ethylbenzene	57.4	U	59.4	U	57.2	U	57.8	U	37.1	U	59.7	U	42.4	U	47.3	U
Hexachlorobutadiene	57.4	U	59.4	U	57.2	U	57.8	U	37.1	U	59.7	U	42.4	U	47.3	U

TABLE 2-1
SOIL DATA SUMMARY
DATA SUMMARY OF VOLATILE ORGANIC COMPOUND RESULTS
JANUARY 2017, JUNE-AUGUST 2018, AND SEPTEMBER 2019
NOCKAMIXON STATE PARK, BUCKS COUNTY, PENNSYLVANIA

Sampling Location:	**MW-3**		**MW-3**		**MW-3**		**MW-3**		**A 200 @4'**		**B 0 @ 6.5'**		**B 125 @ 7'**		**E 275 @ 4.5'**	
Sample Number:	**MW-3 600 C1 @ 5'**		**MW-3 600 C1 @ 5' Duplicate**		**MW-3 700 @ 4.5'**		**MW-3 700 C1 @ 5'**		**A 200 @4'**		**B 0 @ 6.5'**		**B 125 @ 7'**		**E 275 @ 4.5'**	
Date Sampled:	**1/26/2017**		**1/26/2017**		**1/26/2017**		**1/26/2017**		**6/11/2018**		**6/11/2018**		**6/11/2018**		**6/11/2018**	
Duplicate of:			**MW-3 600 C1 @ 5'**													
Volaltiles	**ug/kg**		**ug/kg**		**ug/kg**		**ug/kg**		**ug/kg**		**ug/kg**		**ug/kg**		**ug/kg**	
Isopropylbenzene	57.4	U	59.4	U	57.2	U	57.8	U	37.1	U	59.7	U	42.4	U	47.3	U
m,p-Xylene	115	U	119	U	114	U	116	U	74.2	U	119	U	84.8	U	94.6	U
MEK	287	U	297	U	286	U	289	U	185	U	299	U	212	U	237	U
Methyl Tert-Butyl Ether	57.4	U	59.4	U	57.2	U	57.8	U	37.1	U	59.7	U	42.4	U	47.3	U
Methylene Chloride	57.4	U	59.4	U	57.2	U	57.8	U	37.1	U	59.7	U	42.4	U	47.3	U
MIBK	287	U	297	U	286	U	289	U	185	U	299	U	212	U	237	U
Naphthalene	57.4	U	59.4	U	57.2	U	57.8	U	37.1	U	59.7	U	42.4	U	47.3	U
n-Butylbenzene	57.4	U	59.4	U	57.2	U	57.8	U	37.1	U	59.7	U	42.4	U	47.3	U
n-Propylbenzene	57.4	U	59.4	U	57.2	U	57.8	U	37.1	U	59.7	U	42.4	U	47.3	U
o-Chlorotoluene	57.4	U	59.4	U	57.2	U	57.8	U	37.1	U	59.7	U	42.4	U	47.3	U
o-Xylene	57.4	U	59.4	U	57.2	U	57.8	U	37.1	U	59.7	U	179		47.3	U
p-Chlorotoluene	57.4	U	59.4	U	57.2	U	57.8	U	37.1	U	59.7	U	42.4	U	47.3	U
PCTFB	57.4	U	59.4	U	57.2	U	57.8	U	37.1	U	59.7	U	42.4	U	47.3	U
Sec-Butylbenzene	57.4	U	59.4	U	57.2	U	57.8	U	37.1	U	59.7	U	42.4	U	47.3	U
Styrene	57.4	U	59.4	U	57.2	U	57.8	U	74.2	U	119	U	84.8	U	94.6	U
t-Butyl alcohol	574	U	594	U	572	U	578	U	371	U	597	U	424	U	473	U
tert-Butyl Acetate	287	U	297	U	286	U	289	U	185	U	299	U	212	U	237	U
Tert-Butylbenzene	57.4	U	59.4	U	57.2	U	57.8	U	37.1	U	59.7	U	42.4	U	47.3	U
Tetrachloroethene	57.4	U	59.4	U	57.2	U	57.8	U	878		59.7	U	402		47.3	U
Tetrahydrofuran	57.4	U	59.4	U	57.2	U	57.8	U	74.2	U	119	U	84.8	U	94.6	U
Toluene	57.4	U	59.4	U	57.2	U	57.8	U	37.1	U	59.7	U	42.4	U	47.3	U
trans-1,2-Dichloroethene	57.4	U	59.4	U	57.2	U	57.8	U	37.1	U	59.7	U	78.8		47.3	U
trans-1,3-Dichloropropene	57.4	U	59.4	U	57.2	U	57.8	U	37.1	U	59.7	U	42.4	U	47.3	U
Trichloroethene	57.4	U	59.4	U	57.2	U	57.8	U	187		59.7	U	6120		47.3	U
Trichlorofluoromethane	57.4	U	59.4	U	57.2	U	57.8	U	37.1	U	59.7	U	42.4	U	47.3	U
Vinyl Acetate	57.4	U	59.4	U	57.2	U	57.8	U	37.1	U	59.7	U	42.4	U	47.3	U
Chloroethene (vinyl chloride)	57.4	U	59.4	U	57.2	U	57.8	U	37.1	U	59.7	U	42.4	U	47.3	U

TABLE 2-1
SOIL DATA SUMMARY
DATA SUMMARY OF VOLATILE ORGANIC COMPOUND RESULTS
JANUARY 2017, JUNE-AUGUST 2018, AND SEPTEMBER 2019
NOCKAMIXON STATE PARK, BUCKS COUNTY, PENNSYLVANIA

Sampling Location:	**N 75 @ 4'**		**N 150 @ 4'**		**SB-1**	
Sample Number:	**N 75 @ 4'**		**N 150 @ 4'**		**SB-1 @ 2.5'**	
Date Sampled:	**6/12/2018**		**6/11/2018**		**9/11/2019**	
Duplicate of:						
Volaltiles	**ug/kg**		**ug/kg**		**ug/kg**	
1,1,1,2-Tetrachloroethane	49.2	U	58.8	U	62.5	U
1,1,1-Trichloroethane	49.2	U	58.8	U	62.5	U
1,1,2,2-Tetrachloroethane	49.2	U	58.8	U	62.5	U
1,1,2-Trichloroethane	49.2	U	58.8	U	62.5	U
1,1-Dichloroethane	49.2	U	58.8	U	62.5	U
1,1-Dichloroethene	49.2	U	58.8	U	62.5	U
1,1-Dichloropropene	49.2	U	58.8	U	62.5	U
1,2,3-Trichlorobenzene	49.2	U	58.8	U	62.5	U
1,2,3-Trichloropropane	49.2	U	58.8	U	62.5	U
1,2,4-Trichlorobenzene	49.2	U	58.8	U	62.5	U
1,2,4-Trimethylbenzene	49.2	U	58.8	U	62.5	U
1,2-Dibromo-3-chloropropane	49.2	U	58.8	U	62.5	U
1,2-Dibromoethane	49.2	U	58.8	U	62.5	U
1,2-Dichlorobenzene	49.2	U	58.8	U	62.5	U
1,2-Dichloroethane	49.2	U	58.8	U	62.5	U
1,2-Dichloropropane	49.2	U	58.8	U	62.5	U
1,3,5-Trimethylbenzene	49.2	U	58.8	U	62.5	U
1,3-Dichlorobenzene	49.2	U	58.8	U	62.5	U
1,3-Dichloropropane	49.2	U	58.8	U	62.5	U
1,4-Dichlorobenzene	49.2	U	58.8	U	62.5	U
2,2-Dichloropropane	49.2	U	58.8	U	62.5	U
2-Hexanone	246	U	294	U	313	U
4-Isopropyltoluene	49.2	U	58.8	U	62.5	U
Acetone	246	U	294	U	313	U
Benzene	49.2	U	58.8	U	62.5	U
Bromobenzene	49.2	U	58.8	U	62.5	U
Bromochloromethane	49.2	U	58.8	U	62.5	U
Bromodichloromethane	49.2	U	58.8	U	62.5	U
Bromoform	98.4	U	118	U	62.5	U
Bromomethane	49.2	U	58.8	U	62.5	U
Carbon Disulfide	49.2	U	58.8	U	62.5	U
Carbon Tetrachloride	49.2	U	58.8	U	62.5	U
Chlorobenzene	98.4	U	118	U	125	U
Chloroethane	49.2	U	58.8	U	62.5	U
Chloroform	49.2	U	58.8	U	62.5	U
Chloromethane	49.2	U	58.8	U	62.5	U
cis-1,2-Dichloroethene	49.2	U	58.8	U	62.5	U
cis-1,3-Dichloropropene	49.2	U	58.8	U	62.5	U
Dibromochloromethane	49.2	U	58.8	U	62.5	U
Dibromomethane	49.2	U	58.8	U	62.5	U
Dichlorodifluoromethane	49.2	U	58.8	U	62.5	U
Ethylbenzene	49.2	U	58.8	U	62.5	U
Hexachlorobutadiene	49.2	U	58.8	U	62.5	U

TABLE 2-1
SOIL DATA SUMMARY
DATA SUMMARY OF VOLATILE ORGANIC COMPOUND RESULTS
JANUARY 2017, JUNE-AUGUST 2018, AND SEPTEMBER 2019
NOCKAMIXON STATE PARK, BUCKS COUNTY, PENNSYLVANIA

Sampling Location:	**N 75 @ 4'**		**N 150 @ 4'**		**SB-1**	
Sample Number:	**N 75 @ 4'**		**N 150 @ 4'**		**SB-1 @ 2.5'**	
Date Sampled:	**6/12/2018**		**6/11/2018**		**9/11/2019**	
Duplicate of:						
Volaltiles	**ug/kg**		**ug/kg**		**ug/kg**	
Isopropylbenzene	49.2	U	58.8	U	62.5	U
m,p-Xylene	98.4	U	118	U	125	U
MEK	246	U	294	U	313	U
Methyl Tert-Butyl Ether	49.2	U	58.8	U	62.5	U
Methylene Chloride	49.2	U	58.8	U	62.5	U
MIBK	246	U	294	U	313	U
Naphthalene	49.2	U	58.8	U	62.5	U
n-Butylbenzene	49.2	U	58.8	U	62.5	U
n-Propylbenzene	49.2	U	58.8	U	62.5	U
o-Chlorotoluene	49.2	U	58.8	U	62.5	U
o-Xylene	49.2	U	58.8	U	62.5	U
p-Chlorotoluene	49.2	U	58.8	U	62.5	U
PCTFB	49.2	U	58.8	U	62.5	U
Sec-Butylbenzene	49.2	U	58.8	U	62.5	U
Styrene	98.4	U	118	U	62.5	U
t-Butyl alcohol	492	U	588	U	625	U
tert-Butyl Acetate	246	U	294	U	313	U
Tert-Butylbenzene	49.2	U	58.8	U	62.5	U
Tetrachloroethene	49.2	U	58.8	U	62.5	U
Tetrahydrofuran	98.4	U	118	U	125	U
Toluene	49.2	U	58.8	U	62.5	U
trans-1,2-Dichloroethene	49.2	U	58.8	U	62.5	U
trans-1,3-Dichloropropene	49.2	U	58.8	U	62.5	U
Trichloroethene	49.2	U	58.8	U	62.5	U
Trichlorofluoromethane	49.2	U	58.8	U	62.5	U
Vinyl Acetate	49.2	U	58.8	U	62.5	U
Chloroethene (vinyl chloride)	49.2	U	58.8	U	62.5	U

TABLE 2-1
SOIL QC BLANKS
DATA SUMMARY OF VOLATILE ORGANIC COMPOUND RESULTS
JANUARY 2017, JUNE-AUGUST 2018, AND SEPTEMBER 2019
NOCKAMIXON STATE PARK, BUCKS COUNTY, PENNSYLVANIA

Sampling Location:	**QC**		**QC**		**QC**		**QC**		**QC**		**QC**	
Sample Number:	**Soil Trip Blank #1**		**Soil Trip Blank #2**		**Equipment Blank**		**Trip Blank**		**Trip Blank 1-20190910**		**Field Blank-20191104**	
Date Sampled:	**1/25/2017**		**1/26/2017**		**7/18/2018**		**7/18/2018**		**9/10/2019**		**11/4/2019**	
Volaltiles	**ug/kg**		**ug/kg**		**ug/L**		**ug/L**		**ug/L**		**ug/L**	
1,1,1,2-Tetrachloroethane	50	U	50	U	0.5	U	0.5	U	0.5	U	0.5	U
1,1,1-Trichloroethane	50	U	50	U	0.5	U	0.5	U	0.5	U	0.5	U
1,1,2,2-Tetrachloroethane	50	U	50	U	0.5	U	0.5	U	0.5	U	0.5	U
1,1,2-Trichloroethane	50	U	50	U	0.5	U	0.5	U	0.5	U	0.5	U
1,1-Dichloroethane	50	U	50	U	0.5	U	0.5	U	0.5	U	0.5	U
1,1-Dichloroethene	50	U	50	U	0.5	U	0.5	U	0.5	U	0.5	U
1,1-Dichloropropene	50	U	50	U	0.5	U	0.5	U	0.5	U	0.5	U
1,2,3-Trichlorobenzene	50	U	50	U	0.5	U	0.5	U	0.5	U	0.5	U
1,2,3-Trichloropropane	50	U	50	U	0.5	U	0.5	U	0.5	U	0.5	U
1,2,4-Trichlorobenzene	50	U	50	U	0.5	U	0.5	U	0.5	U	0.5	U
1,2,4-Trimethylbenzene	50	U	50	U	0.5	U	0.5	U	0.5	U	0.5	U
1,2-Dibromo-3-chloropropane	50	U	50	U	0.5	U	0.5	U	0.5	U	0.5	U
1,2-Dibromoethane	50	U	50	U	0.5	U	0.5	U	0.5	U	0.5	U
1,2-Dichlorobenzene	50	U	50	U	0.5	U	0.5	U	0.5	U	0.5	U
1,2-Dichloroethane	50	U	50	U	0.5	U	0.5	U	0.5	U	0.5	U
1,2-Dichloropropane	50	U	50	U	0.5	U	0.5	U	0.5	U	0.5	U
1,3,5-Trimethylbenzene	50	U	50	U	0.5	U	0.5	U	0.5	U	0.5	U
1,3-Dichlorobenzene	50	U	50	U	0.5	U	0.5	U	0.5	U	0.5	U
1,3-Dichloropropane	50	U	50	U	0.5	U	0.5	U	0.5	U	0.5	U
1,4-Dichlorobenzene	50	U	50	U	0.5	U	0.5	U	0.5	U	0.5	U
2,2-Dichloropropane	50	U	50	U	0.5	U	0.5	U	0.5	U	0.5	U
2-Hexanone	250	U	250	U	2.5	U	2.5	U	2.5	U	2.5	U
4-Isopropyltoluene	50	U	50	U	0.5	U	0.5	U	0.5	U	0.5	U
Acetone	250	U	250	U	5	U	5	U	5	U	5	U
Benzene	50	U	50	U	0.5	U	0.5	U	0.5	U	0.5	U
Bromobenzene	50	U	50	U	0.5	U	0.5	U	0.5	U	0.5	U
Bromochloromethane	NA		NA		0.5	U	0.5	U	0.5	U	0.5	U
Bromodichloromethane	50	U	50	U	0.5	U	0.5	U	0.5	U	0.5	U
Bromoform	50	U	50	U	0.5	U	0.5	U	0.5	U	0.5	U
Bromomethane	50	U	50	U	0.5	U	0.5	U	0.5	U	0.5	U
Carbon Disulfide	50	U	50	U	0.5	U	0.5	U	0.5	U	0.5	U
Carbon Tetrachloride	50	U	50	U	0.5	U	0.5	U	0.5	U	0.5	U
Chlorobenzene	50	U	50	U	2.5	U	2.5	U	1	U	1	U
Chloroethane	50	U	50	U	0.5	U	0.5	U	0.5	U	0.5	U
Chloroform	50	U	50	U	0.5	U	0.5	U	0.5	U	0.5	U
Chloromethane	50	U	50	U	0.5	U	0.5	U	1	U	0.5	U
cis-1,2-Dichloroethene	50	U	50	U	0.5	U	0.5	U	0.5	U	0.5	U
cis-1,3-Dichloropropene	50	U	50	U	0.5	U	0.5	U	0.5	U	0.5	U
Dibromochloromethane	50	U	50	U	0.5	U	0.5	U	0.5	U	0.5	U
Dibromomethane	50	U	50	U	0.5	U	0.5	U	0.5	U	0.5	U
Dichlorodifluoromethane	50	U	50	U	0.5	U	0.5	U	0.5	U	0.5	U
Ethylbenzene	50	U	50	U	0.5	U	0.5	U	0.5	U	0.5	U
Hexachlorobutadiene	50	U	50	U	0.5	U	0.5	U	0.5	U	0.5	U
Isopropylbenzene	50	U	50	U	0.5	U	0.5	U	0.5	U	0.5	U
m,p-Xylene	100	U	100	U	1	U	1	U	1	U	1	U
MEK	250	U	250	U	2.5	U	2.5	U	2.5	U	2.5	U

TABLE 2-1
SOIL QC BLANKS
DATA SUMMARY OF VOLATILE ORGANIC COMPOUND RESULTS
JANUARY 2017, JUNE-AUGUST 2018, AND SEPTEMBER 2019
NOCKAMIXON STATE PARK, BUCKS COUNTY, PENNSYLVANIA

Sampling Location:	**QC**		**QC**		**QC**		**QC**		**QC**		**QC**	
Sample Number:	**Soil Trip Blank #1**		**Soil Trip Blank #2**		**Equipment Blank**		**Trip Blank**		**Trip Blank 1-20190910**		**Field Blank-20191104**	
Date Sampled:	**1/25/2017**		**1/26/2017**		**7/18/2018**		**7/18/2018**		**9/10/2019**		**11/4/2019**	
Volaltiles	**ug/kg**		**ug/kg**		**ug/L**		**ug/L**		**ug/L**		**ug/L**	
Methyl Tert-Butyl Ether	50	U	50	U	0.5	U	0.5	U	0.5	U	0.5	U
Methylene Chloride	50	U	50	U	1	U	1	U	1	U	1	U
MIBK	250	U	250	U	2.5	U	2.5	U	2.5	U	2.5	U
Naphthalene	50	U	50	U	0.5	U	0.5	U	0.5	U	0.5	U
n-Butylbenzene	50	U	50	U	0.5	U	0.5	U	0.5	U	0.5	U
n-Propylbenzene	50	U	50	U	0.5	U	0.5	U	0.5	U	0.5	U
o-Chlorotoluene	50	U	50	U	0.5	U	0.5	U	0.5	U	0.5	U
o-Xylene	50	U	50	U	0.5	U	0.5	U	0.5	U	0.5	U
p-Chlorotoluene	50	U	50	U	0.5	U	0.5	U	0.5	U	0.5	U
PCTFB	50	U	50	U	0.5	U	0.5	U	0.5	U	0.5	U
Sec-Butylbenzene	50	U	50	U	0.5	U	0.5	U	0.5	U	0.5	U
Styrene	50	U	50	U	0.5	U	0.5	U	0.5	U	0.5	U
t-Butyl alcohol	500	U	500	U	5	U	5	U	5	U	5	U
tert-Butyl Acetate	250	U	250	U	2.5	U	2.5	U	2.5	U	2.5	U
Tert-Butylbenzene	50	U	50	U	0.5	U	0.5	U	0.5	U	0.5	U
Tetrachloroethene	50	U	50	U	0.5	U	0.5	U	0.5	U	0.5	U
Tetrahydrofuran	50	U	50	U	2.5	U	2.5	U	1	U	1	U
Toluene	50	U	50	U	0.5	U	0.5	U	0.5	U	0.5	U
trans-1,2-Dichloroethene	50	U	50	U	0.5	U	0.5	U	0.5	U	0.5	U
trans-1,3-Dichloropropene	50	U	50	U	0.5	U	0.5	U	0.5	U	0.5	U
Trichloroethene	50	U	50	U	0.5	U	0.5	U	0.5	U	0.5	U
Trichlorofluoromethane	50	U	50	U	0.5	U	0.5	U	0.5	U	0.5	U
Vinyl Acetate	50	U	50	U	1	U	1	U	1	U	1	U
Chloroethene (vinyl chloride)	50	U	50	U	0.5	U	0.5	U	0.5	U	0.5	U

TABLE 2-2
GROUNDWATER FROM SOIL GAS PROBES DATA SUMMARY
DATA SUMMARY OF VOLATILE ORGANIC COMPOUND RESULTS
JUNE-AUGUST 2018 AND SEPTEMBER 2019
NOCKAMIXON STATE PARK, BUCKS COUNTY, PENNSYLVANIA

Sampling Location:	**SG-2**		**SG-3**		**SG-3**		**SG-8**		**SG-9**		**SG-11**		**SG-12**	
Sample Number:	**SG-2**		**SG-3**		**SG-3**		**SG-8**		**SG-9**		**SG-11**		**SG-12**	
Location Description:	**Near MW-2**		**Near MW-11**		**Near MW-11**		**Near MW-4**		**Near Greenhouse**					
Date Sampled:	**7/18/2018**		**7/18/2018**		**11/4/2019**		**7/18/2018**		**7/18/2018**		**11/4/2019**		**11/4/2019**	
Volaltiles	**ug/L**		**ug/L**		**ug/L**		**ug/L**		**ug/L**		**ug/L**		**ug/L**	
1,1,1,2-Tetrachloroethane	0.5	U	0.5	U	0.5	U	0.5	U	0.5	U	0.5	U	0.5	U
1,1,1-Trichloroethane	0.5	U	109		192		0.5	U	0.5	U	0.5	U	0.5	U
1,1,2,2-Tetrachloroethane	0.5	U	0.5	U	0.5	U	0.5	U	0.5	U	0.5	U	0.5	U
1,1,2-Trichloroethane	0.5	U	4.3		4.3		0.5	U	0.5	U	0.5	U	0.5	U
1,1-Dichloroethane	0.5	U	18.2		16		0.5	U	0.5	U	0.5	U	0.5	U
1,1-Dichloroethene	0.5	U	39.4		73.4		0.5	U	0.5	U	0.5	U	0.5	U
1,1-Dichloropropene	0.5	U	0.5	U	0.5	U	0.5	U	0.5	U	0.5	U	0.5	U
1,2,3-Trichlorobenzene	0.5	U	0.5	U	0.5	U	0.5	U	0.5	U	0.5	U	0.5	U
1,2,3-Trichloropropane	0.5	U	0.5	U	0.5	U	0.5	U	0.5	U	0.5	U	0.5	U
1,2,4-Trichlorobenzene	0.5	U	0.5	U	0.5	U	0.5	U	0.5	U	0.5	U	0.5	U
1,2,4-Trimethylbenzene	0.5	U	0.5	U	0.5	U	0.5	U	0.5	U	0.5	U	0.5	U
1,2-Dibromo-3-chloropropane	0.5	U	0.5	U	0.5	U	0.5	U	0.5	U	0.5	U	0.5	U
1,2-Dibromoethane	0.5	U	0.5	U	0.5	U	0.5	U	0.5	U	0.5	U	0.5	U
1,2-Dichlorobenzene	0.5	U	0.5	U	0.5	U	0.5	U	0.5	U	0.5	U	0.5	U
1,2-Dichloroethane	0.5	U	0.5	U	0.5	U	0.5	U	0.5	U	0.5	U	0.5	U
1,2-Dichloropropane	0.5	U	0.5	U	0.5	U	0.5	U	0.5	U	0.5	U	0.5	U
1,3,5-Trimethylbenzene	0.5	U	0.5	U	0.5	U	0.5	U	0.5	U	0.5	U	0.5	U
1,3-Dichlorobenzene	0.5	U	0.5	U	0.5	U	0.5	U	0.5	U	0.5	U	0.5	U
1,3-Dichloropropane	0.5	U	0.5	U	0.5	U	0.5	U	0.5	U	0.5	U	0.5	U
1,4-Dichlorobenzene	0.5	U	0.5	U	0.5	U	0.5	U	0.5	U	0.5	U	0.5	U
2,2-Dichloropropane	0.5	U	0.5	U	0.5	U	0.5	U	0.5	U	0.5	U	0.5	U
2-Hexanone	2.5	U	2.5	U	2.5	U	2.5	U	2.5	U	2.5	U	2.5	U
4-Isopropyltoluene	0.5	U	0.5	U	0.5	U	0.5	U	0.5	U	0.5	U	0.5	U
Acetone	5	U	5	U	5	U	5	U	5	U	5	U	5	U
Benzene	0.5	U	0.5	U	0.5	U	0.5	U	0.5	U	0.5	U	0.5	U
Bromobenzene	0.5	U	0.5	U	0.5	U	0.5	U	0.5	U	0.5	U	0.5	U
Bromochloromethane	0.5	U	0.5	U	0.5	U	0.5	U	0.5	U	0.5	U	0.5	U
Bromodichloromethane	0.5	U	0.5	U	0.5	U	0.5	U	0.5	U	0.5	U	0.5	U
Bromoform	0.5	U	0.5	U	0.5	U	0.5	U	0.5	U	0.5	U	0.5	U
Bromomethane	0.5	U	0.5	U	0.5	U	0.5	U	0.5	U	0.5	U	0.5	U
Carbon Disulfide	0.5	U	0.5	U	0.5	U	0.5	U	0.5	U	0.5	U	0.5	U
Carbon Tetrachloride	0.5	U	0.5	U	0.5	U	0.5	U	0.5	U	0.5	U	0.5	U
Chlorobenzene	2.5	U	2.5	U	1	U	2.5	U	2.5	U	1	U	1	U
Chloroethane	0.5	U	0.5	U	0.5	U	0.5	U	0.5	U	0.5	U	0.5	U
Chloroethene (vinyl chloride)	0.5	U	6.5		2.7		0.5	U	0.5	U	0.5	U	0.5	U
Chloroform	0.5	U	0.5	U	0.5	U	0.5	U	0.5	U	0.5	U	0.5	U
Chloromethane	0.5	U	0.5	U	0.5	U	0.5	U	0.5	U	0.5	U	0.5	U
cis-1,2-Dichloroethene	2.1		526		772		2.9		0.5	U	0.5	U	0.5	U
cis-1,3-Dichloropropene	0.5	U	0.5	U	0.5	U	0.5	U	0.5	U	0.5	U	0.5	U
Dibromochloromethane	0.5	U	0.5	U	0.5	U	0.5	U	0.5	U	0.5	U	0.5	U
Dibromomethane	0.5	U	0.5	U	0.5	U	0.5	U	0.5	U	0.5	U	0.5	U
Dichlorodifluoromethane	0.5	U	0.5	U	0.5	U	0.5	U	0.5	U	0.5	U	0.5	U
Ethylbenzene	0.5	U	0.5	U	0.5	U	0.5	U	0.5	U	0.5	U	0.5	U

TABLE 2-2
GROUNDWATER FROM SOIL GAS PROBES DATA SUMMARY
DATA SUMMARY OF VOLATILE ORGANIC COMPOUND RESULTS
JUNE-AUGUST 2018 AND SEPTEMBER 2019
NOCKAMIXON STATE PARK, BUCKS COUNTY, PENNSYLVANIA

Sampling Location:	**SG-2**		**SG-3**		**SG-3**		**SG-8**		**SG-9**		**SG-11**		**SG-12**	
Sample Number:	**SG-2**		**SG-3**		**SG-3**		**SG-8**		**SG-9**		**SG-11**		**SG-12**	
Location Description:	**Near MW-2**		**Near MW-11**		**Near MW-11**		**Near MW-4**		**Near Greenhouse**					
Date Sampled:	**7/18/2018**		**7/18/2018**		**11/4/2019**		**7/18/2018**		**7/18/2018**		**11/4/2019**		**11/4/2019**	
Volaltiles	**ug/L**		**ug/L**		**ug/L**		**ug/L**		**ug/L**		**ug/L**		**ug/L**	
Hexachlorobutadiene	0.5	U	0.5	U	0.5	U	0.5	U	0.5	U	0.5	U	0.5	U
Isopropylbenzene	0.5	U	0.5	U	0.5	U	0.5	U	0.5	U	0.5	U	0.5	U
m,p-Xylene	1	U	1	U	1	U	1	U	1	U	1	U	1	U
MEK	2.5	U	2.5	U	2.5	U	2.5	U	2.5	U	2.5	U	2.5	U
Methyl Tert-Butyl Ether	0.5	U	0.5	U	0.5	U	0.5	U	0.5	U	0.5	U	0.5	U
Methylene Chloride	1	U	1	U	1	U	1	U	1	U	1	U	1	U
MIBK	2.5	U	2.5	U	2.5	U	2.5	U	2.5	U	2.5	U	2.5	U
Naphthalene	0.5	U	0.5	U	0.5	U	0.5	U	0.5	U	0.5	U	0.5	U
n-Butylbenzene	0.5	U	0.5	U	0.5	U	0.5	U	0.5	U	0.5	U	0.5	U
n-Propylbenzene	0.5	U	0.5	U	0.5	U	0.5	U	0.5	U	0.5	U	0.5	U
o-Chlorotoluene	0.5	U	0.5	U	0.5	U	0.5	U	0.5	U	0.5	U	0.5	U
o-Xylene	0.5	U	0.5	U	0.5	U	0.5	U	0.5	U	0.5	U	0.5	U
p-Chlorotoluene	0.5	U	0.5	U	0.5	U	0.5	U	0.5	U	0.5	U	0.5	U
PCTFB	0.5	U	0.5	U	0.5	U	0.5	U	0.5	U	0.5	U	0.5	U
Sec-Butylbenzene	0.5	U	0.5	U	0.5	U	0.5	U	0.5	U	0.5	U	0.5	U
Styrene	0.5	U	0.5	U	0.5	U	0.5	U	0.5	U	0.5	U	0.5	U
t-Butyl alcohol	5	U	5	U	5	U	5	U	5	U	5	U	5	U
tert-Butyl Acetate	2.5	U	2.5	U	2.5	U	2.5	U	2.5	U	2.5	U	2.5	U
Tert-Butylbenzene	0.5	U	0.5	U	0.5	U	0.5	U	0.5	U	0.5	U	0.5	U
Tetrachloroethene	0.58		90.6		161		4.1		0.52		0.5	U	0.5	U
Tetrahydrofuran	2.5	U	2.5	U	1	U	2.5	U	2.5	U	1	U	1	U
Toluene	0.5	U	0.5	U	0.5	U	0.5	U	0.5	U	0.5	U	0.5	U
trans-1,2-Dichloroethene	0.5	U	2.4		5		0.5	U	0.5	U	0.5	U	0.5	U
trans-1,3-Dichloropropene	0.5	U	0.5	U	0.5	U	0.5	U	0.5	U	0.5	U	0.5	U
Trichloroethene	4.3		580		1200		4.1		0.5	U	1.6		1.2	
Trichlorofluoromethane	0.5	U	0.5	U	0.5	U	0.5	U	0.5	U	0.5	U	0.5	U
Vinyl Acetate	1	U	1	U	1	U	1	U	1	U	1	U	1	U

TABLE 2-3
SOIL GAS SUMMARY RESULTS
DATA SUMMARY OF VOLATILE ORGANIC COMPOUND RESULTS
JANUARY 2017, JUNE-AUGUST 2018, AND SEPTEMBER 2019
NOCKAMIXON STATE PARK, BUCKS COUNTY, PENNSYLVANIA

Sampling Location:	**SG-1**		**SG-3**		**SG-4**		**SG-5**		**SG-6**		**SG-6**		**SG-7**		**SG-10**		**SG-10**		**SG-11**		**SG-12**	
Sample Number:	**SG-1**		**SG-3**		**SG-4**		**SG-5**		**SG-6**		**SG-6**		**SG-7**		**SG-10**		**SG-10**		**SG-11**		**SG-12**	
Location Description:	**77 Brennan Rd**		**Near MW-11**		**84 Brennan Road**				**91 Brennan Rd**		**91 Brennan Rd - Wooded Area**		**At Corner of Fenced Pasture**						**Near Garden/Tree Line**		**Kind Earth Growers Property**	
Date Sampled:	**7/18/2018**		**9/12/2019**		**7/18/2018**		**9/12/2019**		**8/30/2018**		**9/12/2019**		**8/30/2018**		**8/29/2018**		**9/12/2019**		**9/12/2019**		**9/12/2019**	
Volatiles	**ug/m3**		**ug/m3**		**ug/m3**		**ug/m3**		**ug/m3**		**ug/m3**		**ug/m3**		**ug/m3**		**ug/m3**		**ug/m3**		**ug/m3**	
1,1,1-Trichloroethane	993000		124000		1910		2.33		0.555	U	0.827		0.555	U	0.555	U	2.04		16.3		0.555	U
1,1,2-Trichloroethane	16600	U	4440	U	166	U	0.555	U	0.555	U	0.555	U	0.555	U	0.555	U	0.555	U	0.555	U	0.555	U
1,1-Dichloroethane	17867.3		3256	U	122.1	U	0.407	U	0.407	U	0.407	U	0.407	U	0.407	U	0.407	U	0.407	U	0.407	U
1,1-Dichloroethene	29400		54000		261		0.415		0.403	U	0.403	U	0.403	U	0.403	U	0.798		7.17		0.403	U
1,2-Dichloroethane	12300	U	3290	U	123	U	0.411	U	0.411	U	0.411	U	0.411	U	0.411	U	0.411	U	0.411	U	0.567	
Chloroethene (vinyl chloride)	14500		2340		78	U	0.26	U	0.26	U	0.26	U	0.26	U	0.26	U	0.26	U	0.351		0.26	U
cis-1,2-Dichloroethene	2040000		95500		4150		1.13		0.403	U	0.677		0.403	U	0.967		1.56		13.7		0.403	U
Tetrachloroethene	4840000		110000		101000		23.3		0.689	U	1.12		0.689	U	5.58		1.98		99.9		4.96	
trans-1,2-Dichloroethene	83800		3220	U	121	U	0.403	U	0.403	U	0.403	U	0.403	U	0.403	U	0.403	U	0.403		0.403	U
Trichloroethene	3310000		402000		29400		23.1		0.546	U	2.73		0.546	U	2.07		6.28		51		0.841	

TABLE 2-4
NOCKAMIXON TCE - 65 BRENNAN ROAD
PRE AND POST MITIGATION AIR SAMPLING
MAY 2017 AND MAY 2019
NOCKAMIXON STATE PARK, BUCKS COUNTY, PENNSYLVANIA

Sampling Location:			BS-01		BS-02		BS-03		BS-04		BS-05		BS-06		DUP-01		65 Brennan		65 Brennan		FF-01		65 Brennan		SF-01		65 Brennan		AA-01		65 Brennan	
Sample Number:	Res. Air RSL Carc. TR=1E-6	Res. Air RSL Non-Carc THI=0.1	BS-01		BS-02		BS-03		BS-04		BS-05		BS-06		DUP-01		65 Brennan - Basement Air (near sump)		65 Brennan - Basement Air (near vent pipe)		FF-01		65 Brennan - First Floor Air (Living Room)		SF-01		65 Brennan - Second Floor Air (top of stairs)		AA-01		65 Brennan - Outdoor/Ambient Air (front porch)	
Date Sampled:			5/1/2017		5/1/2017		5/1/2017		5/1/2017		5/1/2017		5/1/2017		5/1/2017		5/9/2019		5/9/2019		5/1/2017		5/9/2019		5/1/2017		5/9/2019		5/1/2017		5/9/2019	
Duplicate of:																																
PRE or POST mitigation:			PRE		PRE		PRE		PRE		PRE		PRE		PRE		POST		POST		PRE		POST		PRE		POST		PRE		POST	
Volatiles	ug/m3	ug/m3	ug/m3		ug/m3		ug/m3		ug/m3		ug/m3		ug/m3		ug/m3		ug/m3		ug/m3		ug/m3		ug/m3		ug/m3		ug/m3		ug/m3		ug/m3	
1,1,1-Trichloroethane	nc	520	9.2		18		9.1		8.3		9.8		9.2		8.8		1.22		1.19		5	J	0.555	U	4.9	J	0.555	U	1.1	U	0.555	U
1,1,2-Trichloroethane	0.18	0.021	1.1	U	1.1	U	1.1	U	1.1	U	1.1	U	1.1	U	1.1	U	0.555	U	0.555	U	1.1	U	0.555	U	1.1	U	0.555	U	1.1	U	0.555	U
1,1-Dichloroethane	1.8	nc	0.91	J	7.1		0.99	J	0.88	J	1.1	J	1	J	0.84	J	0.407	U	0.407	U	0.81	U	0.407	U	0.81	U	0.407	U	0.81	U	0.407	U
1,1-Dichloroethene	nc	21	12		7.6		11		9.6		11		11		11		0.403	U	0.403	U	3.1	J	0.403	U	3.2	J	0.403	U	0.79	U	0.403	U
1,2-Dichloroethane	0.11	0.73	0.81	U	0.81	U	0.81	U	0.81	U	0.81	U	0.81	U	0.81	U	0.411	U	0.411	U	0.81	U	0.411	U	0.81	U	0.411	U	0.81	U	0.411	U
cis-1,2-Dichloroethene	nc	nc	22		100		23		21		30		22		22		0.403	U	0.403	U	7.8		0.403	U	7.7		0.403	U	0.79	U	0.403	U
Tetrachloroethene	11	4.2	66		39		66		62		59		68		66		1.37		1.2		49		1.16		49		0.723		1.4	U	0.689	U
trans-1,2-Dichloroethene	nc	nc	0.79	U	0.79	U	0.79	U	0.79	U	0.79	U	0.79	U	0.79	U	0.403	U	0.403	U	0.79	U	0.403	U	0.79	U	0.403	U	0.79	U	0.403	U
Trichloroethene	0.48	0.21	74		120		70		63		76		72		73		0.934		0.857		21		0.546	U	22		0.546	U	1.1	U	0.546	U
Vinyl chloride	0.17	10	0.51	U	0.51	U	0.51	U	0.51	U	0.51	U	0.51	U	0.51	U	0.26	U	0.26	U	0.51	U	0.26	U	0.51	U	0.26	U	0.51	U	0.26	U

Notes:
J -- Value is considered estimated due to exceedance of technical quality control criteria or because result is less than the Reporting Limit (RL)
U -- Value is a non-detected result as reported by the laboratory.
ug/m3 -- microgram per cubic meter
nc -- No screening level criterion is available.
Pink highlighted value exceeds the most stringent of the Residential Air Risk Screening Levels (November 2019).

TABLE 2-5
NOCKAMIXON TCE - 84 BRENNAN ROAD
AIR SAMPLING
JANUARY 2019
NOCKAMIXON STATE PARK, BUCKS COUNTY, PENNSYLVANIA

Sampling Location:			**84 Brennan**		**84 Brennan**		**84 Brennan**		**84 Brennan**		**84 Brennan**		**84 Brennan**	
Sample Number:			**84 Brennan - Basement Air**		**64 Brennan - Duplicate (Basement Air)**		**84 Brennan - Crawlspace Air**		**84 Brennan - 1st Floor Air**		**84 Brennan - 2nd Floor Air**		**84 Brennan - Outdoor/Ambient Air**	
Date Sampled:		**Res. Air RSL Non-Carc THI=0.1**	**1/31/2019**		**1/31/2019**		**1/31/2019**		**1/31/2019**		**1/31/2019**		**1/31/2019**	
Duplicate of:	**Res. Air RSL Carc. TR=1E-6**				**84 Brennan - Basement Air**									
Volatiles	**ug/m3**	**ug/m3**	**ug/m3**		**ug/m3**		**ug/m3**		**ug/m3**		**ug/m3**		**ug/m3**	
1,1,1-Trichloroethane	nc	520	0.555	U	0.555	U	0.555	U	0.555	U	0.555	U	0.555	U
1,1,2-Trichloroethane	0.18	0.021	0.555	U	0.555	U	0.555	U	0.555	U	0.555	U	0.555	U
1,1-Dichloroethane	1.8	nc	0.407	U	0.407	U	0.407	U	0.407	U	0.407	U	0.407	U
1,1-Dichloroethene	nc	21	0.403	U	0.403	U	0.403	U	0.403	U	0.403	U	0.403	U
1,2-Dichloroethane	0.11	0.73	0.411	U	0.411	U	0.411	U	0.493		0.411	U	0.411	U
cis-1,2-Dichloroethene	nc	nc	0.403	U	0.403	U	0.403	U	0.403	U	0.403	U	0.403	U
Tetrachloroethene	11	4.2	1.31		1.72		0.689	U	10.3		0.689	U	0.689	U
trans-1,2-Dichloroethene	nc	nc	0.403	U	0.403	U	0.403	U	0.403	U	0.403	U	0.403	U
Trichloroethene	0.48	0.21	0.546	U	0.546	U	0.546	U	2.02		0.546	U	0.546	U
Vinyl chloride	0.17	10	0.26	U	0.26	U	0.26	U	0.26	U	0.26	U	0.26	U

Notes:
J -- Value is considered estimated due to exceedance of technical quality control criteria or because result is less than the Reporting Limit (RL).
U -- Value is a non-detected result as reported by the laboratory.
ug/m3 -- microgram per cubic meter
nc -- No screening level criterion is available.
Pink highlighted value exceeds the most stringent of the Residential Air Risk Screening Levels (November 2019).

TABLE 2-6
DATA SUMMARY OF ANALYTICAL RESULTS FOR REGIONAL SAMPLING
AIR AND SUMP SAMPLING - FEBRUARY 2018
NOCKAMIXON STATE PARK, BUCKS COUNTY, PENNSYLVANIA

Sampling Location:	**2503 Mtn. View**									
Sample Number:	**2503 Mtn. View - Ambient (behind greenhouse)**		**2511 Mtn. View - Ambient (Porch bench)**		**2503 Mtn. View - Greenhouse**		**2511 Mtn. View - First Floor (living room)**		**2511 Mtn. View - Second Floor (landing)**	
Date Sampled:	**2/28/2018**		**2/28/2018**		**2/28/2018**		**2/28/2018**		**2/28/2018**	
Duplicate of:										
Volatiles	**ug/m3**		**ug/m3**		**ug/m3**		**ug/m3**		**ug/m3**	
1,1,1-Trichloroethane	0.555	U	0.555	U	0.555	U	0.555	U	0.555	U
1,1,2-Trichloroethane	0.555	U	0.555	U	0.555	U	0.555	U	0.555	U
1,1-Dichloroethane	0.407	U	0.407	U	0.407	U	0.407	U	0.407	U
1,1-Dichloroethene	0.403	U	0.403	U	0.403	U	0.403	U	0.403	U
1,2-Dichloroethane	0.411	U	0.411	U	0.411	U	0.411	U	0.411	U
Chloroethene	0.26	U	0.26	U	0.26	U	0.26	U	0.26	U
cis-1,2-Dichloroethene	0.403	U	0.403	U	0.403	U	0.403	U	0.403	U
Tetrachloroethene	0.689	U	0.689	U	0.689	U	0.689	U	0.689	U
trans-1,2-Dichloroethene	0.403	U	0.403	U	0.403	U	4.84		7.25	
Trichloroethene	0.546	U	0.546	U	0.546	U	0.546	U	0.546	U

TABLE 2-6
DATA SUMMARY OF ANALYTICAL RESULTS FOR REGIONAL SAMPLING
AIR AND SUMP SAMPLING - FEBRUARY 2018
NOCKAMIXON STATE PARK, BUCKS COUNTY, PENNSYLVANIA

Sampling Location:	**338 Park**									
Sample Number:	**338 Park - Outdoor/Ambient (Front Porch)**		**338 Park - Basement 1 (near NE corner)**		**338 Park - Basement 2 (near stairs)**		**Duplicate (338 Park - Basement 2 [near stairs])**		**338 Park - Upstairs (Dining Room Bench)**	
Date Sampled:	**2/28/2018**		**2/28/2018**		**2/28/2018**		**2/28/2018**		**2/28/2018**	
Duplicate of:							**338 Park - Basement 2 (near stairs)**			
Volatiles	**ug/m3**		**ug/m3**		**ug/m3**		**ug/m3**		**ug/m3**	
1,1,1-Trichloroethane	0.555	U	4.38		4.55		4.55		3.55	
1,1,2-Trichloroethane	0.555	U	0.555	U	0.555	U	0.555	U	0.555	U
1,1-Dichloroethane	0.407	U	0.407	U	0.407	U	0.407	U	0.407	U
1,1-Dichloroethene	0.403	U	0.403	U	0.403	U	0.403	U	0.403	U
1,2-Dichloroethane	0.411	U	0.411	U	0.411	U	0.411	U	0.411	U
Chloroethene	0.26	U	0.26	U	0.26	U	0.26	U	0.26	U
cis-1,2-Dichloroethene	0.403	U	0.403	U	0.403	U	0.403	U	0.403	U
Tetrachloroethene	0.689	U	2.48		3.03		2.96		2.2	
trans-1,2-Dichloroethene	0.403	U	0.403	U	0.403	U	0.403	U	0.403	U
Trichloroethene	0.546	U	0.546	U	0.546	U	0.546	U	0.546	U

TABLE 2-6
DATA SUMMARY OF ANALYTICAL RESULTS FOR REGIONAL SAMPLING
AIR AND SUMP SAMPLING - FEBRUARY 2018
NOCKAMIXON STATE PARK, BUCKS COUNTY, PENNSYLVANIA

Sampling Location:	**77 Brennan**							
Sample Number:	**77 Brennan Outdoor (near chimney)**		**77 Brennan - Basement 1 (Near POET)**		**77 Brennan - Basement 2 (near sump/oil tank)**		**77 Brenan - First Floor (Hall near bedrooms)**	
Date Sampled:	**2/28/2018**		**2/28/2018**		**2/28/2018**		**2/28/2018**	
Duplicate of:								
Volatiles	**ug/m3**		**ug/m3**		**ug/m3**		**ug/m3**	
1,1,1-Trichloroethane	0.555	U	0.555	U	0.555	U	0.555	U
1,1,2-Trichloroethane	0.555	U	0.555	U	0.555	U	0.555	U
1,1-Dichloroethane	0.407	U	0.407	U	0.407	U	0.407	U
1,1-Dichloroethene	0.403	U	0.403	U	0.403	U	0.403	U
1,2-Dichloroethane	0.411	U	0.411	U	0.411	U	0.411	U
Chloroethene	0.26	U	0.26	U	0.26	U	0.26	U
cis-1,2-Dichloroethene	0.403	U	0.403	U	0.403	U	0.403	U
Tetrachloroethene	0.689	U	0.689	U	0.689	U	0.689	U
trans-1,2-Dichloroethene	0.403	U	0.403	U	0.403	U	0.403	U
Trichloroethene	0.546	U	0.546	U	0.546	U	0.546	U

TABLE 2-6
DATA SUMMARY OF ANALYTICAL RESULTS FOR REGIONAL SAMPLING
AIR AND SUMP SAMPLING - FEBRUARY 2018
NOCKAMIXON STATE PARK, BUCKS COUNTY, PENNSYLVANIA

Sampling Location:	**2503 Mtn. View**		**338 Park**		**77 Brennan**		**QC**	
Sample Number:	**2503 Mtn. View - Supply Well**		**338 Park - Sump**		**77 Brennan - Sump**		**Trip Blank-20180227**	
Date Sampled:	**2/27/2018**		**2/27/2018**		**2/27/2018**		**2/27/2018**	
Volatiles	**ug/L**		**ug/L**		**ug/L**		**ug/L**	
1,1,1,2-Tetrachloroethane	0.5	U	0.5	U	0.5	U	0.5	U
1,1,1-Trichloroethane	2.2		0.5	U	0.5	U	0.5	U
1,1,2,2-Tetrachloroethane	0.5	U	0.5	U	0.5	U	0.5	U
1,1,2-Trichloroethane	0.5	U	0.5	U	0.5	U	0.5	U
1,1-Dichloroethane	0.5	U	0.5	U	0.5	U	0.5	U
1,1-Dichloroethene	2.1		0.5	U	0.5	U	0.5	U
1,1-Dichloropropene	0.5	U	0.5	U	0.5	U	0.5	U
1,2,3-Trichlorobenzene	0.5	U	0.5	U	0.5	U	0.5	U
1,2,3-Trichloropropane	0.5	U	0.5	U	0.5	U	0.5	U
1,2,4-Trichlorobenzene	0.5	U	0.5	U	0.5	U	0.5	U
1,2,4-Trimethylbenzene	0.5	U	0.5	U	0.5	U	0.5	U
1,2-Dibromo-3-chloropropane	0.5	U	0.5	U	0.5	U	0.5	U
1,2-Dibromoethane	0.5	U	0.5	U	0.5	U	0.5	U
1,2-Dichlorobenzene	0.5	U	0.5	U	0.5	U	0.5	U
1,2-Dichloroethane	0.5	U	0.5	U	0.5	U	0.5	U
1,2-Dichloropropane	0.5	U	0.5	U	0.5	U	0.5	U
1,3,5-Trimethylbenzene	0.5	U	0.5	U	0.5	U	0.5	U
1,3-Dichlorobenzene	0.5	U	0.5	U	0.5	U	0.5	U
1,3-Dichloropropane	0.5	U	0.5	U	0.5	U	0.5	U
1,4-Dichlorobenzene	0.5	U	0.5	U	0.5	U	0.5	U
2,2-Dichloropropane	0.5	U	0.5	U	0.5	U	0.5	U
2-Hexanone	2.5	U	2.5	U	2.5	U	2.5	U
4-Isopropyltoluene	0.5	U	0.5	U	0.5	U	0.5	U
Acetone	5	U	5	U	5	U	5	U
Benzene	0.5	U	0.5	U	0.5	U	0.5	U
Bromobenzene	0.5	U	0.5	U	0.5	U	0.5	U
Bromochloromethane	0.5	U	0.5	U	0.5	U	0.5	U
Bromodichloromethane	0.5	U	0.5	U	0.5	U	0.5	U
Bromoform	0.5	U	0.5	U	0.5	U	0.5	U
Bromomethane	0.5	U	0.5	U	0.5	U	0.5	U
Carbon Disulfide	0.5	U	0.5	U	0.5	U	0.5	U
Carbon Tetrachloride	0.5	U	0.5	U	0.5	U	0.5	U
Chlorobenzene	1	U	1	U	1	U	1	U
Chloroethane	0.5	U	0.5	U	0.5	U	0.5	U
Chloroform	0.5	U	0.5	U	0.5	U	0.5	U
Chloromethane	0.5	U	0.5	U	0.5	U	0.5	U
cis-1,2-Dichloroethene	11.2		0.5	U	0.5	U	0.5	U
cis-1,3-Dichloropropene	0.5	U	0.5	U	0.5	U	0.5	U
Dibromochloromethane	0.5	U	0.5	U	0.5	U	0.5	U
Dibromomethane	0.5	U	0.5	U	0.5	U	0.5	U
Dichlorodifluoromethane	0.5	U	0.5	U	0.5	U	0.5	U
Ethylbenzene	0.5	U	0.5	U	0.5	U	0.5	U
Hexachlorobutadiene	0.5	U	0.5	U	0.5	U	0.5	U
Isopropylbenzene	0.5	U	0.5	U	0.5	U	0.5	U
m,p-Xylene	1	U	1	U	1	U	1	U
MEK	5	U	5	U	5	U	5	U
Methyl Tert-Butyl Ether	0.5	U	0.5	U	0.5	U	0.5	U
Methylene Chloride	1	U	1	U	1	U	1	U
MIBK	2.5	U	2.5	U	2.5	U	2.5	U
Naphthalene	0.5	U	0.5	U	0.5	U	0.5	U
n-Butylbenzene	0.5	U	0.5	U	0.5	U	0.5	U
n-Propylbenzene	0.5	U	0.5	U	0.5	U	0.5	U
o-Chlorotoluene	0.5	U	0.5	U	0.5	U	0.5	U
o-Xylene	0.5	U	0.5	U	0.5	U	0.5	U
p-Chlorotoluene	0.5	U	0.5	U	0.5	U	0.5	U
PCTFB	0.5	U	0.5	U	0.5	U	0.5	U
Sec-Butylbenzene	0.5	U	0.5	U	0.5	U	0.5	U
Styrene	0.5	U	0.5	U	0.5	U	0.5	U

TABLE 2-6
DATA SUMMARY OF ANALYTICAL RESULTS FOR REGIONAL SAMPLING
AIR AND SUMP SAMPLING - FEBRUARY 2018
NOCKAMIXON STATE PARK, BUCKS COUNTY, PENNSYLVANIA

Sampling Location:	**2503 Mtn. View**		**338 Park**		**77 Brennan**		**QC**	
Sample Number:	**2503 Mtn. View - Supply Well**		**338 Park - Sump**		**77 Brennan - Sump**		**Trip Blank-20180227**	
Date Sampled:	**2/27/2018**		**2/27/2018**		**2/27/2018**		**2/27/2018**	
Volatiles	**ug/L**		**ug/L**		**ug/L**		**ug/L**	
t-Butyl alcohol	10	U	10	U	10	U	10	U
tert-Butyl Acetate	2.5	U	2.5	U	2.5	U	2.5	U
Tert-Butylbenzene	0.5	U	0.5	U	0.5	U	0.5	U
Tetrachloroethene	3.2		0.5	U	0.5	U	0.5	U
Tetrahydrofuran	1	U	1	U	1	U	1	U
Toluene	0.5	U	0.5	U	0.5	U	0.5	U
Total Xylenes	0		0		0		0	
trans-1,2-Dichloroethene	0.5	U	0.5	U	0.5	U	0.5	U
trans-1,3-Dichloropropene	0.5	U	0.5	U	0.5	U	0.5	U
Trichloroethene	75.2		0.5	U	0.5	U	0.5	U
Trichlorofluoromethane	0.5	U	0.5	U	0.5	U	0.5	U
Vinyl Acetate	1	U	1	U	1	U	1	U
Vinyl chloride	0.5	U	0.5	U	0.5	U	0.5	U

TABLE 2-6
DATA SUMMARY OF ANALYTICAL RESULTS
AIR AND SUMP SAMPLING - FEBRUARY 2017
NOCKAMIXON STATE PARK, BUCKS COUNTY, PENNSYLVANIA

Data Qualifiers:
U -- Value is a non-detected result as reported by the laboratory.

FIGURES

C:\All Projects\112IC08434\5007 2070\112IC08434GS01.dwg MKB 12/6/19

TETRA TECH

SITE LOCATION MAP
NOCKAMIXON TCE SITE
NOCKAMIXON TOWNSHIP
BUCKS COUNTY, PENNSYLVANIA

FILE	SCALE
112IC08434GS01	AS NOTED
FIGURE NUMBER / REV / DATE	
FIGURE 1–1	0 / 12/6/19

C:\All_Projects\112\C08434\5007.2070\SG LOC.mxd MKB 1/26/2020

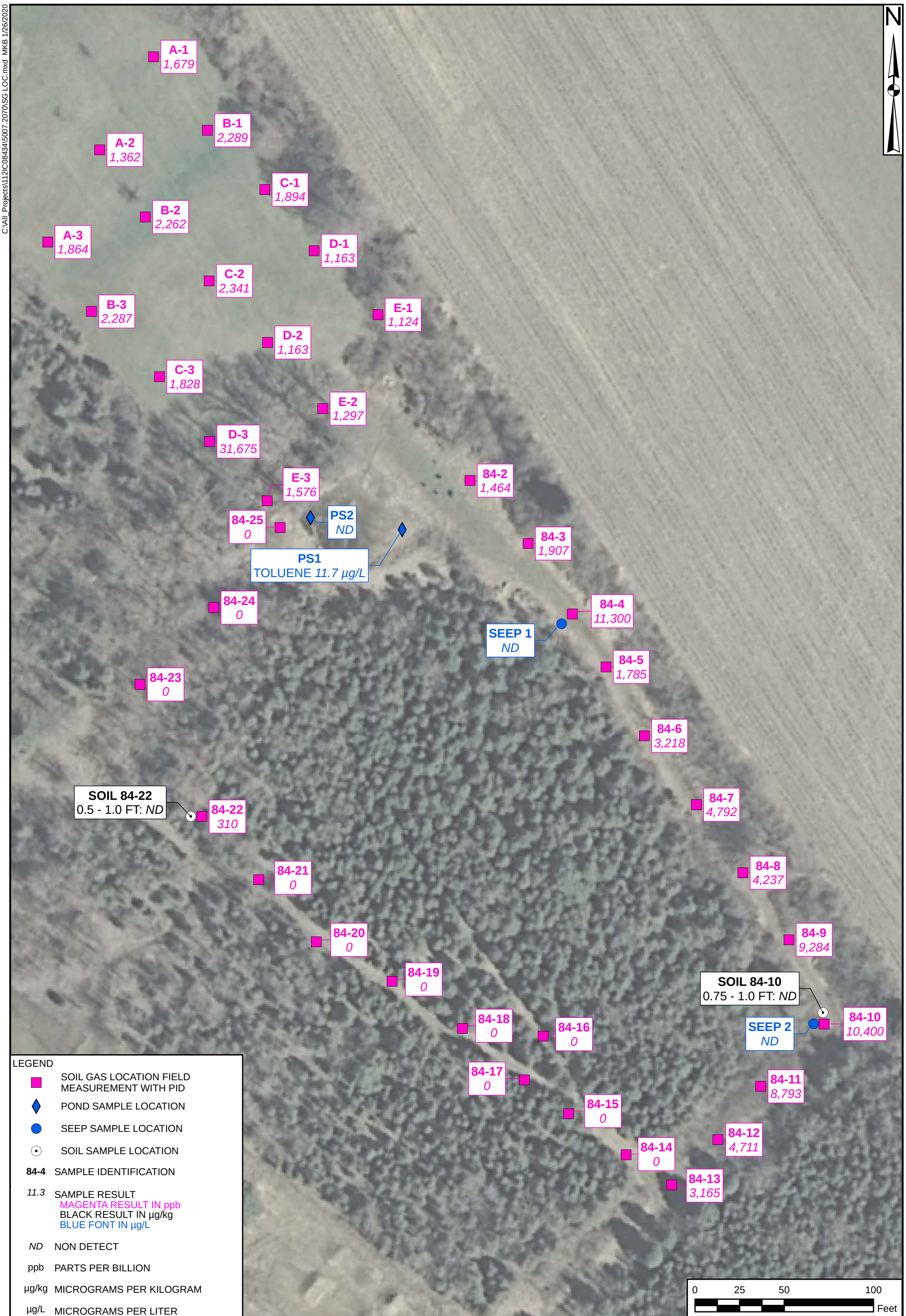

LEGEND

- SOIL GAS LOCATION FIELD MEASUREMENT WITH PID
- POND SAMPLE LOCATION
- SEEP SAMPLE LOCATION
- SOIL SAMPLE LOCATION
- **84-4** SAMPLE IDENTIFICATION
- *11.3* SAMPLE RESULT
  MAGENTA RESULT IN ppb
  BLACK RESULT IN µg/kg
  BLUE FONT IN µg/L
- *ND* NON DETECT
- ppb PARTS PER BILLION
- µg/kg MICROGRAMS PER KILOGRAM
- µg/L MICROGRAMS PER LITER

TETRA TECH

NOCKAMIXON TCE OFF-SITE MEDIA SAMPLING
84 BRENNAN ROAD
JANUARY - FEBRUARY 2019
NOCKAMIXON TOWNSHIP
BUCKS COUNTY, PENNSYLVANIA

SCALE	
AS NOTED	
FILE	
SG LOC	
REV	DATE
0	01/26/20
FIGURE NUMBER	
FIGURE 2-1	

C:\All_Projects\112IC08434\5007.20\70112IC08434GM06.dwg MKB 2/2/20

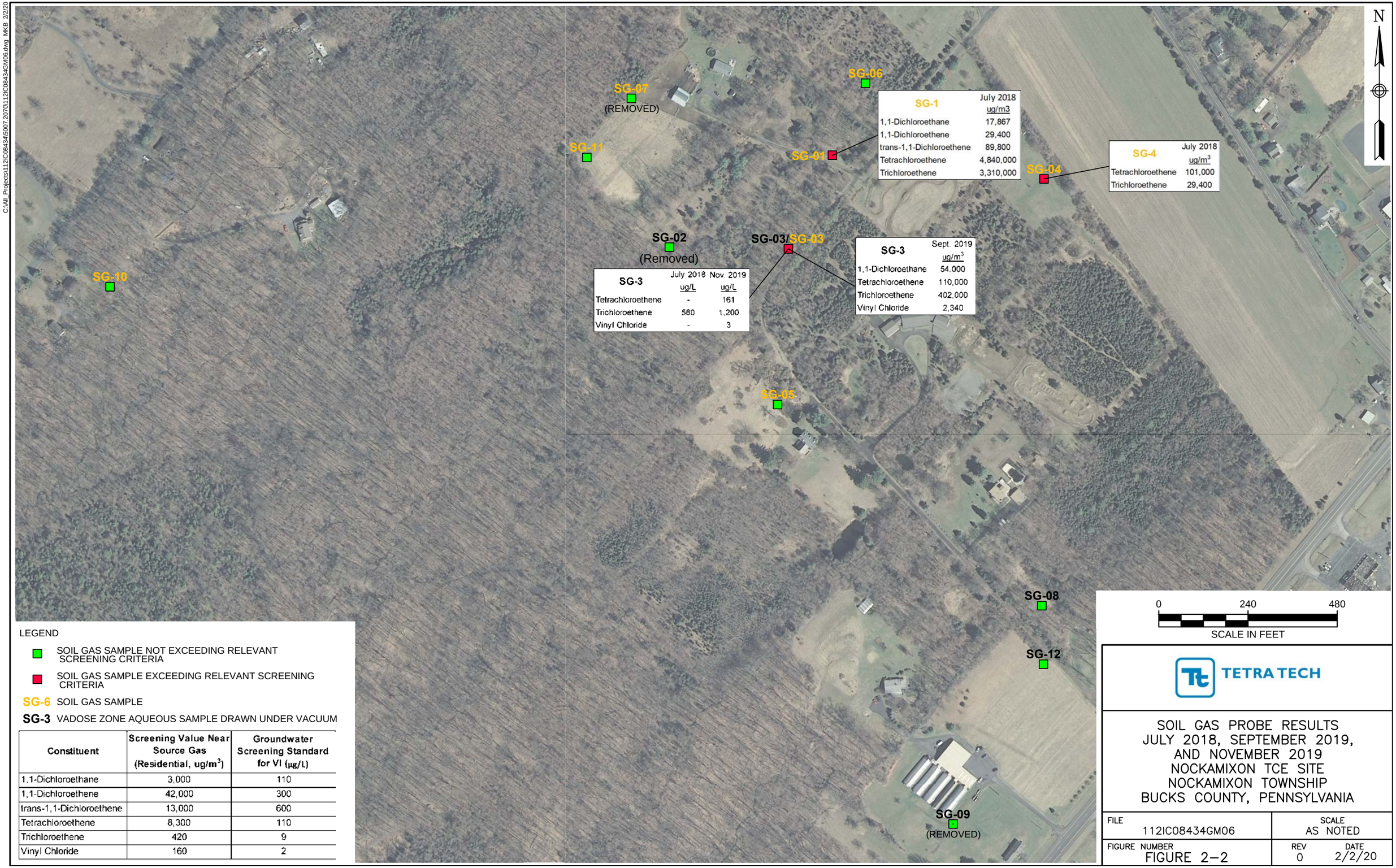

SG-1	July 2018 ug/m3
1,1-Dichloroethane	17,867
1,1-Dichloroethene	29,400
trans-1,1-Dichloroethene	89,800
Tetrachloroethene	4,840,000
Trichloroethene	3,310,000

SG-4	July 2018 ug/m^3
Tetrachloroethene	101,000
Trichloroethene	29,400

SG-3	July 2018 ug/L	Nov. 2019 ug/L
Tetrachloroethene	-	161
Trichloroethene	580	1,200
Vinyl Chloride	-	3

SG-3	Sept. 2019 ug/m^3
1,1-Dichloroethane	54,000
Tetrachloroethene	110,000
Trichloroethene	402,000
Vinyl Chloride	2,340

LEGEND

- SOIL GAS SAMPLE NOT EXCEEDING RELEVANT SCREENING CRITERIA
- SOIL GAS SAMPLE EXCEEDING RELEVANT SCREENING CRITERIA
- **SG-6** SOIL GAS SAMPLE
- **SG-3** VADOSE ZONE AQUEOUS SAMPLE DRAWN UNDER VACUUM

Constituent	Screening Value Near Source Gas (Residential, ug/m^3)	Groundwater Screening Standard for VI (µg/L)
1,1-Dichloroethane	3,000	110
1,1-Dichloroethene	42,000	300
trans-1,1-Dichloroethene	13,000	600
Tetrachloroethene	8,300	110
Trichloroethene	420	9
Vinyl Chloride	160	2

TETRA TECH

SOIL GAS PROBE RESULTS
JULY 2018, SEPTEMBER 2019,
AND NOVEMBER 2019
NOCKAMIXON TCE SITE
NOCKAMIXON TOWNSHIP
BUCKS COUNTY, PENNSYLVANIA

FILE	SCALE
112IC08434GM06	AS NOTED

FIGURE NUMBER	REV	DATE
FIGURE 2-2	0	2/2/20

C:\All_Projects\112IC08434\5007.20\70112IC08434GM04.dwg MKB 1/26/20

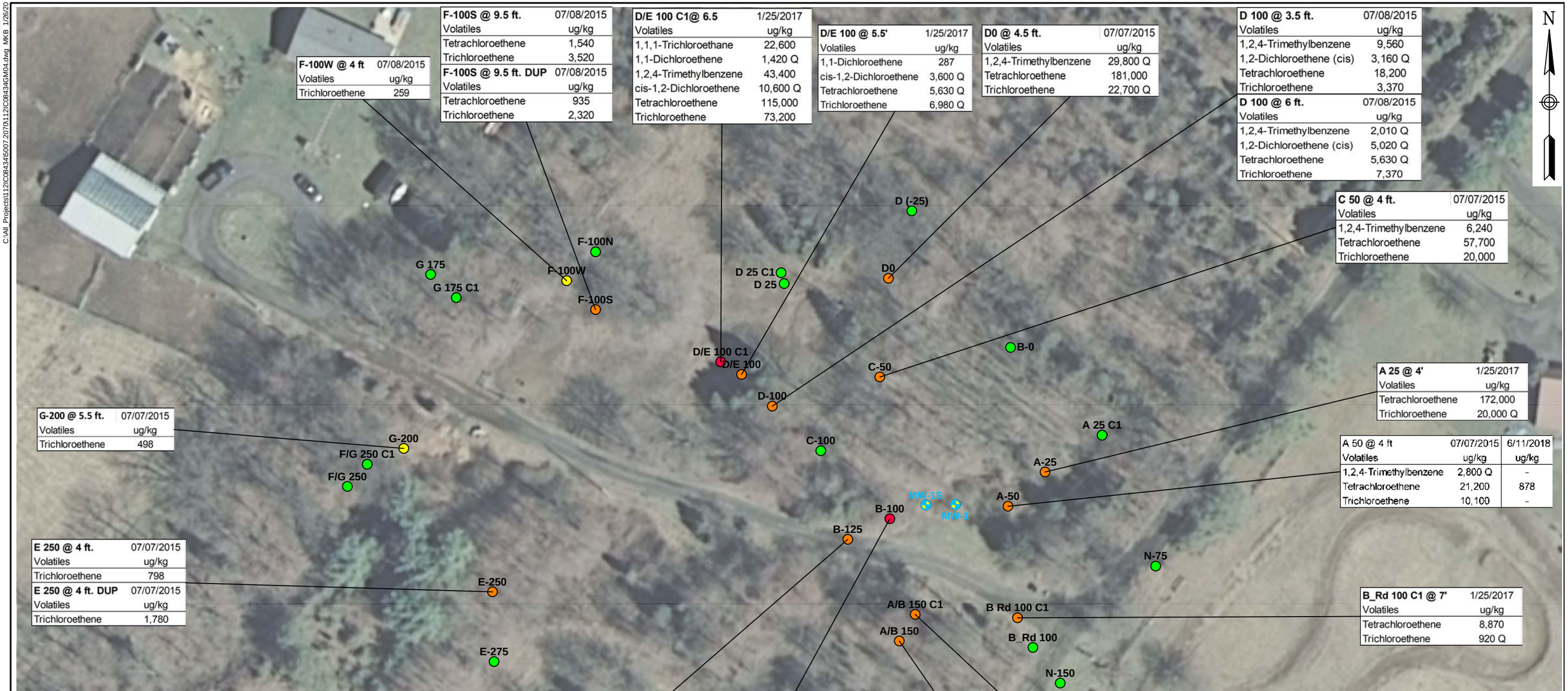

LEGEND

- MONITORING WELL
- NO EXCEEDANCES
- EXCEEDANCE SOIL TO INDOOR AIR
- EXCEEDANCE BOTH GW AND INDOOR AIR CRITERIA
- EXCEEDANCE DIRECT CONTACT CRITERIA
- Q AVERAGE OF MULTIPLE ANALYSES

Constituent	Residential Direct Contact MSC	Residential Soil/GW MSCs	
		100 x GW MSC	Soil to Indoor Air
		Used Aquifers	Residential
1,1,1-Trichloroethane	10000000	20000	7200
1,1-Dichloroethene	3800000	700	190
1,2,4-Trimethylbenzene	130000	1500	8400
cis-1,2-Dichloroethene	440000	7000	-
Tetrachloroethene	770000	500	430
Trichloroethene	38000	500	170

TETRA TECH

NORTH SOIL BORING RESULTS
JULY 2015, JANUARY 2017,
AND JUNE 2018
NOCKAMIXON TCE SITE
NOCKAMIXON TOWNSHIP
BUCKS COUNTY, PENNSYLVANIA

FILE	SCALE
112IC08434GM04	AS NOTED
FIGURE NUMBER	REV / DATE
FIGURE 2-3	0 / 1/26/20

C:\All_Projects\112IC08434\5007.2070\112IC08434GM05.dwg MKB 1/26/20

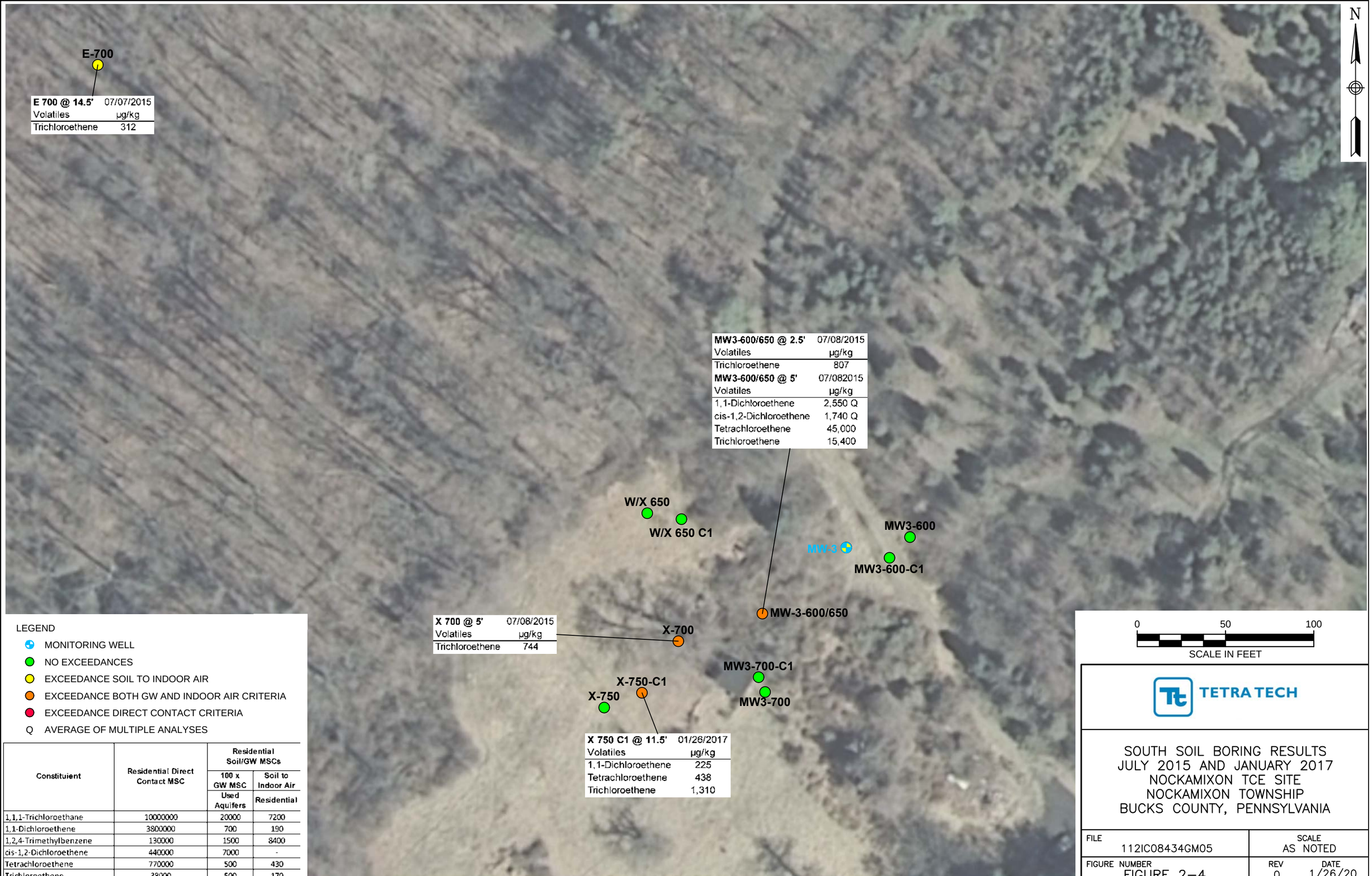

LEGEND

- MONITORING WELL
- NO EXCEEDANCES
- EXCEEDANCE SOIL TO INDOOR AIR
- EXCEEDANCE BOTH GW AND INDOOR AIR CRITERIA
- EXCEEDANCE DIRECT CONTACT CRITERIA
- Q AVERAGE OF MULTIPLE ANALYSES

Constituient	Residential Direct Contact MSC	Residential Soil/GW MSCs	
		100 x GW MSC	Soil to Indoor Air
		Used Aquifers	Residential
1,1,1-Trichloroethane	10000000	20000	7200
1,1-Dichloroethene	3800000	700	190
1,2,4-Trimethylbenzene	130000	1500	8400
cis-1,2-Dichloroethene	440000	7000	-
Tetrachloroethene	770000	500	430
Trichloroethene	38000	500	170

TETRA TECH

SOUTH SOIL BORING RESULTS
JULY 2015 AND JANUARY 2017
NOCKAMIXON TCE SITE
NOCKAMIXON TOWNSHIP
BUCKS COUNTY, PENNSYLVANIA

FILE	SCALE
112IC08434GM05	AS NOTED
FIGURE NUMBER: FIGURE 2-4	REV: 0 / DATE: 1/26/20

KOP:C:\ALL_PROJECTS\112IC08434\GIS\MAPDOCS\NOCK_RES_SAMP_2020.01.MXD 2/11/2020 MKB

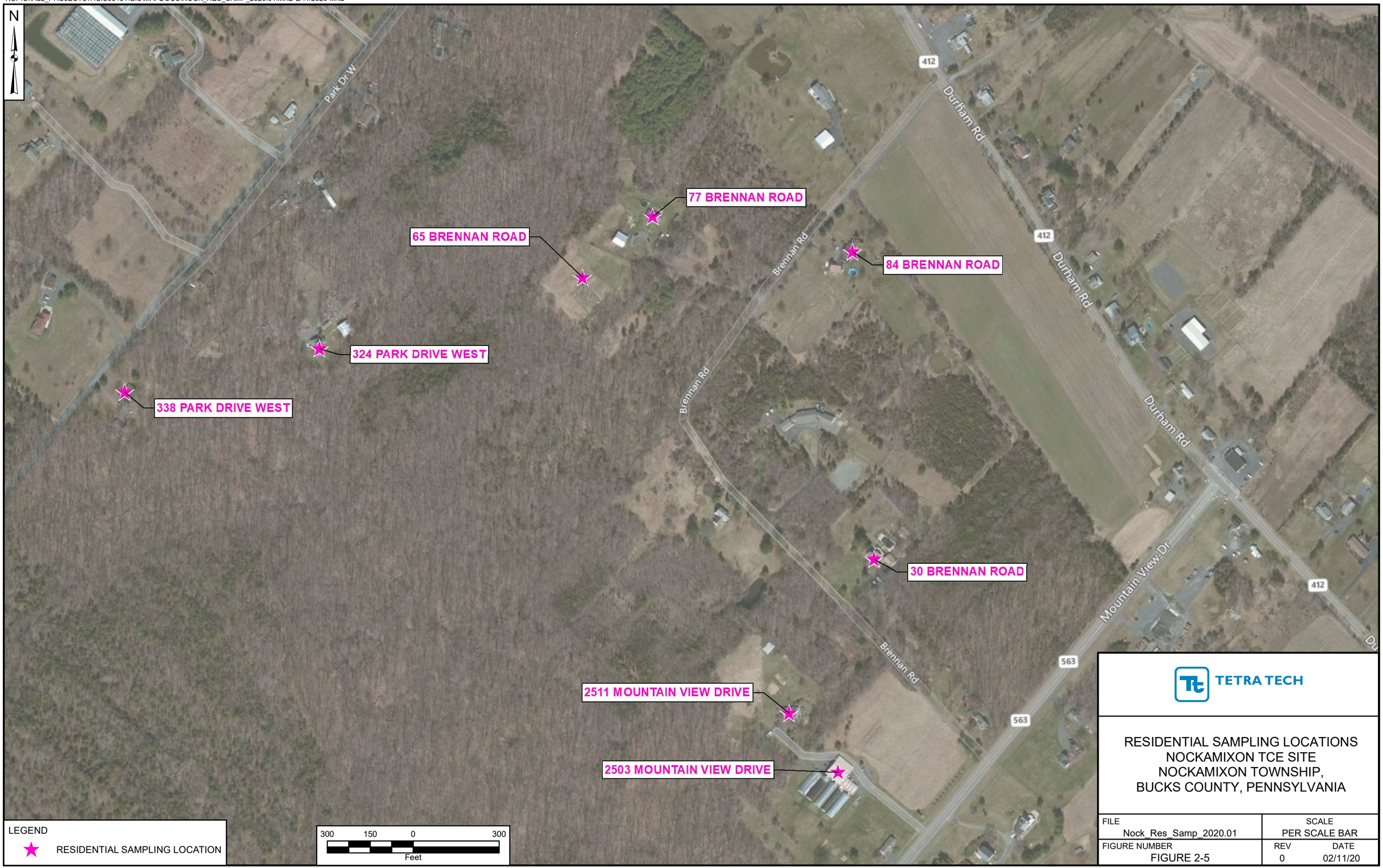

TETRA TECH

RESIDENTIAL SAMPLING LOCATIONS
NOCKAMIXON TCE SITE
NOCKAMIXON TOWNSHIP,
BUCKS COUNTY, PENNSYLVANIA

FILE	SCALE	
Nock_Res_Samp_2020.01	PER SCALE BAR	
FIGURE NUMBER	REV	DATE
FIGURE 2-5	0	02/11/20

APPENDIX A

MW-1S WELL LOGGING REPORT

Reference: 19-327-1

October 30, 2019

ADVANCED GEOLOGICAL SERVICES
3 Mystic Lane
Malvern, PA 19355
(610) 722-5500 (ph.)
(610) 722-0250 (fax)

Mr. Kevin Kilmartin PG, CPG
Tetra Tech
234 Mall Boulevard, Suite 260
King of Prussia, PA 19406

Subject: Geophysical Logging Results
Nockamixon Twp. TCE Site
Brennen Road
Kintnersville, Pennsylvania

Dear Mr. Kilmartin:

Advanced Geological Services (AGS) is pleased to present this letter report summarizing the results of borehole geophysical logging performed at the above referenced site. Borehole logging was performed in well MW-1S on October 15, 2019.

The objectives of geophysical logging of MW-1S were to locate water bearing zones and/or fractures, determine fracture depth/location/orientation, and current borehole conditions.

Logs requested to meet the project objectives were:

- Gamma ray
- Fluid resistivity
- Fluid temperature
- Caliper
- Acoustic televiewer (ACTV)
- Heat pulse flowmeter (HPF) (ambient and pumping)

1.0 METHODOLOGY

The gamma ray, fluid temperature, and fluid resistivity logs were completed on a single run using a multi-tool sonde. The multi-tool logs and 3-arm caliper log were acquired using a System VI Compu-Log Portable Logging System manufactured by Century Geophysical Corporation. The heat pulse flowmeter, and acoustic televiewer logs were acquired with a Mount Sopris Matrix logging system. Each of the logs are described briefly below.

1.1. NATURAL GAMMA RAY LOGS

The natural gamma ray log is a passive instrument that measures the amount of naturally occurring radioactivity from geologic units within the borehole. Commonly occurring radioelements include potassium, thorium, and uranium; the two former elements are predominant within a common fine-grained rock sequence. The gamma ray log is also an

excellent lithologic indicator because fine-grained clays and shales contain a higher radioelement concentration than limestones or sands. Gamma ray values are often used to assess the percentage of clay materials (indurated or non-indurated) that are present within a formation by utilizing empirically derived equations and sand-shale base line information.

The natural radioactivity range for earth materials is as follows:

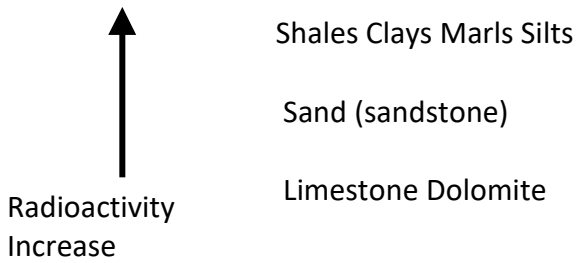

1.2. FLUID RESISTIVITY LOGS

Resistivity is a measure of how well an electric current passes through a material. Formation resistivity is an intrinsic property of rocks and depends on the porosity and resistivity of the interstitial fluid and rock matrix. A log of fluid resistivity, which is the reciprocal of fluid conductivity, provides data related to the concentration of dissolved solids in the fluid column. Fluid resistivity is measured in units of ohm-meters, which is equivalent to 1/microsiemen/centimeter (1/µS/cm). Although the quality of the fluid column may not reflect the quality of adjacent interstitial fluids, the information can be quite useful when combined with other logs. For example, change in fluid resistivity associated with a water-producing zone that is corroborated by other logs may indicate the inflow of impacted ground water.

1.3. FLUID TEMPERATURE LOGS

Temperature logs measure the change in fluid temperature within the borehole as a function of depth. The utility of this log is that it can provide information on the location of water-bearing strata or fracture zones within the well. The inherent assumptions of this technique are that the fluids entering the borehole from the water zones are either cooler or warmer than the mud fluids used for drilling purposes, or the water equilibrating within the well bore. In this case, it is possible to relate a temperature anomaly to a depth range that waters of different temperature are emanating from, indicating a potential water-bearing or fractured lithologic unit.

1.4. CALIPER LOGS

The caliper log measures variations in borehole size as a function of depth in a well. The log data enables (a) the detection of competent or fractured geologic units, (b) the location of washouts or tight zones, (c) the optimal placement of well screen, sand, and bentonite, and (d) the establishment of appropriate borehole correction factors to be applied to other well log curves. Further, when run in combination with other logs, the caliper log may be an indicator of lithologic makeup and degree of consolidation. The typical caliper response in a fractured, or weathered unit is a relatively abrupt increase in borehole diameter.

1.5. ACOUSTIC TELEVIEWER (ACTV) LOGS

The acoustic televiewer log provides an oriented high-resolution image of the borehole using high-resolution ulta-sound waves. The oriented image of the borehole is presented in both amplitude and travel time. ACTV logs cannot be collected in an air-filled borehole, but unlike the OPTV log, ACTV logs can be collected in mud filled holes, water with low or no clarity, or boreholes that have FLUTE™ liners installed. Results from this tool provide location and orientation information of features such as fractures, lithologic contacts, and cavities. The ACTV digitizes up to 360 measurements around the borehole every 0.02 feet along the length of the borehole. Since the acquired image is digitized and properly oriented with respect to borehole deviation and tool rotation, it allows data processing to provide accurate strike and dip information of structural features.

1.6. HEAT PULSE FLOWMETER (HPF) LOGS

The heat pulse flowmeter measures the vertical flow rates within a borehole. The log may be used to identify contributing fracture zones under natural and pumping conditions. The system operates by heating a wire grid that is located between two thermistors. The heated body of water moves toward one of the thermistors under the effect of the vertical component of flow within the well. Positive and negative values on the log represent upward and downward flow, respectively. The flow is calibrated to gallons/minute (gpm) for the flowmeter tool. The heat pulse flowmeter tool used in this investigation can detect vertical flow rates between 0.03 and 1.0 gpm.

The heat pulse flowmeter can be used in either ambient, un-pumped conditions or in pumped conditions. In a well in natura,l ambient conditions water will flow vertically through the well bore as a result of different head conditions at different fractures or water producing zones. If the head levels are the same in fractures penetrated by the well bore there will be no driving force for water to flow vertically within the well bore. While these fractures could potentially produce significant amounts of water if pumped, without a head difference to produce the driving force, there will be no flow within the well.

Pumping a well at a low flow rate during the completion of a heat pulse flowmeter log can help to better identify potential water producing fractures, particularly in wells that exhibit no vertical flow under ambient conditions. In a well that already has a relatively high vertical flow rate under ambient conditions, pumping the well may not provide any additional information. This is particularly true if the well experiences upward vertical flow rates under ambient conditions that are already near the upper measurable limit of the heat pulse flowmeter sonde (1 gpm).

2.0 RESULTS AND DISCUSSION

A suite of logs to identify potential fractures locations and orientations, and water bearing zones was completed in well MW-1S. Well MW-1S is a 6-inch diameter steel cased well with a stick-up height of 2.6 feet above the ground surface. All depths discussed and referenced in the logs are relative to the top of casing (TOC) The well is cased to a depth of 42.3 feet and has a total depth of 147 feet. At the time of logging the depth to water was estimated to be 96.5 feet below TOC based on responses from the fluid logs and ACTV log.

Generally the gamma response was consistent with the presence of siltsone or silty sandstone, and showed slight variations in lithology throughout the length of the well bore with the strongest responses at depth of 46, 52, and the interval between 64-70 feet. The strong responses suggest the presence of possible (black?) shale. Comparison of the gamma responses to the drilling logs would be helpful to pinpoint lithology zones. No notably strong gamma responses were noted below the standing water level.

The caliper log indicates minor increases in borehole diameter at depths of 65.5, 90.5, and 100.5 feet, and prominent fracture between 132-134 feet. The only significant fracture identified in the ACTV log was joint centered at a depth of 131.6 feet, within the zone identified in the caliper data. This joint dips to the north with a dip azimuth of 6.3° and a dip angle of 83.7°. No other measurable fractures were noted within the ACTV log.

Heat pulse flowmeter data collected under ambient conditions indicates that water flowing into the well at a zone of potential soft or friable lithology at a depth of 100.5, and flow down the wellbore exiting at the fracture centered at 131.6 feet.

Heat pulse flowmeter data collected under pumping conditions show that water is entering the fracture at 131.6 feet. That fracture is the only contributor to flow under pumping conditions. It was not possible to test the zone at a depth of 100.5 under pumping conditions because of water draw-down and the required depth of the pump to keep from cavitating.

3.0 SUMMARY AND CLOSING

Geophysical well logs were completed in well MW-1S to locate water bearing zones and/or

fractures, determine fracture depth/location/orientation, and current borehole conditions.

Generally, MW-1S has few fractures, with the predominant water bearing joint located at a depth of 131.6 feet and dipping steeply towards the north. A second, minor water bearing zone believed to be related to soft or friable bedding is located at a depth of 100.5 feet.

The natural gamma log is consistent with the presence of siltstone or silty sandstone with potential shale zones present at depths of 46, 52, and 64-70 feet.

The data collection and interpretation methodologies used in this investigation are consistent with standard practices applied to similar geophysical investigations. The correlation of geophysical responses with probable subsurface features is based on the past results of similar surveys although it is possible that some variation could exist at this site.

Please contact us if you have any questions or would like to discuss the logging results. We appreciate your business and look forward to working with you again.

Sincerely,

Donald Jagel

Donald Jagel, P.G.
Principal Geophysicist

Attachment: Geophysical Well Log of MW-1S

ADVANCED GEOLOGICAL SERVICES

Multi-tool, Caliper, Acoustic Televiewer, Heat Pulse Flowmeter

CO TetraTech
WELL MW-1S
FLD Nockamixon Twp.
CTY Kintnersville
STE PA
FILING No

CLIENT Tetra Tech
WELL ID MW-1S
SITE Nockamixon Twp.
CITY Kintnersville **STATE** PA

LOCATION

SEC TWP RGE

OTHER SERVICES

PERMANENT DATUM: _____ ELEVATION _____ K.B.

LOG MEAS. FROM: Top of Casing (TOC) ABOVE PERM. DATUM _____ D.F.

DRILLING MEAS. FROM: _____ G.L.

DATE	10/15/19	TYPE FLUID IN HOLE	water
RUN No		SALINITY	
TYPE LOG		DENSITY	
DEPTH-DRILLER		LEVEL	96.5 ft
DEPTH-LOGGER		MAX. REC. TEMP.	
BTM LOGGED INTERVAL			
TOP LOGGED INTERVAL			
OPERATING RIG TIME			
RECORDED BY	DJ		
WITNESSED BY			

REMARKS:
Stick-up height: 2.6 ft
6-inch diameter
Steel cased to 42.3 ft
Total depth: 147 ft

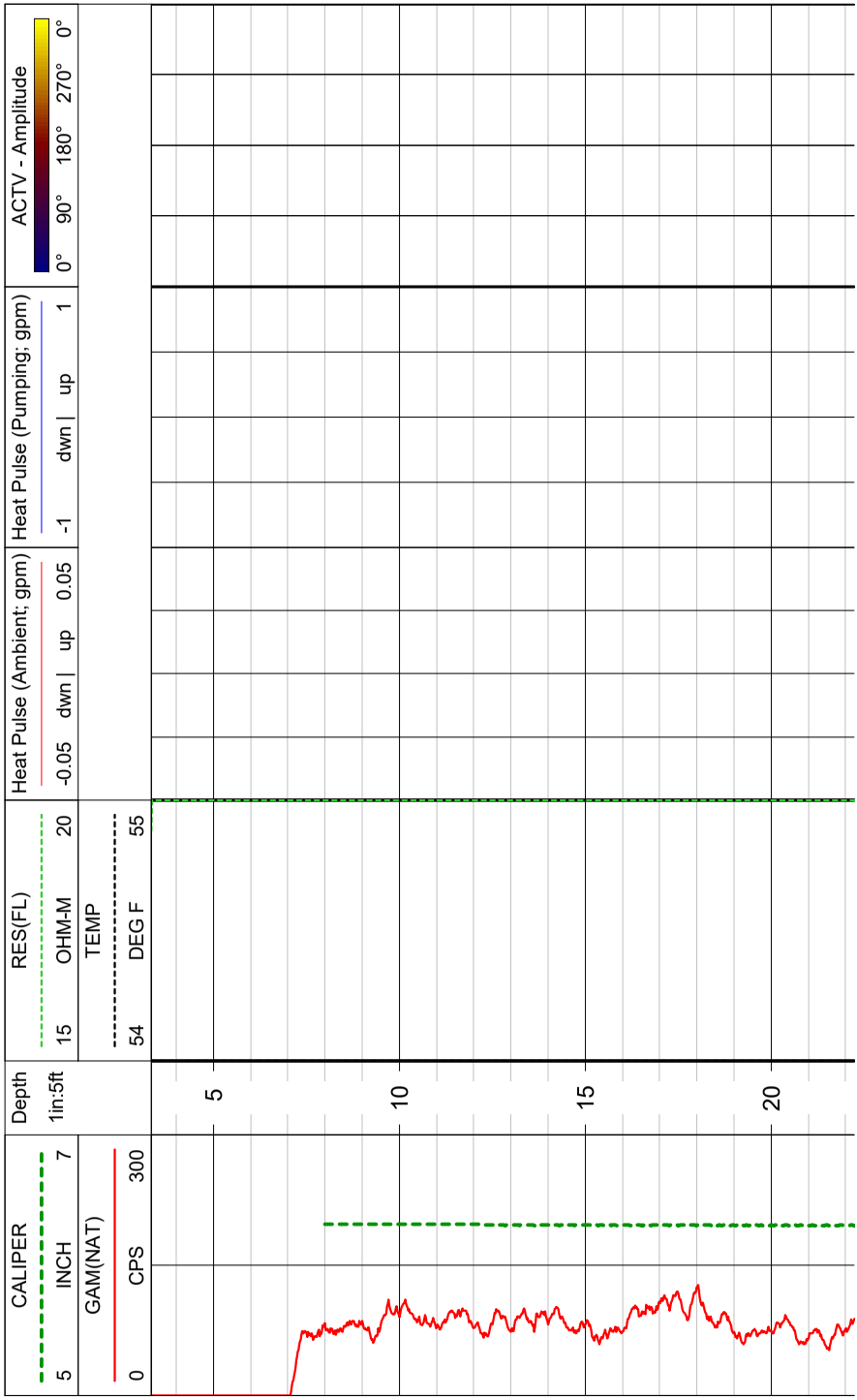

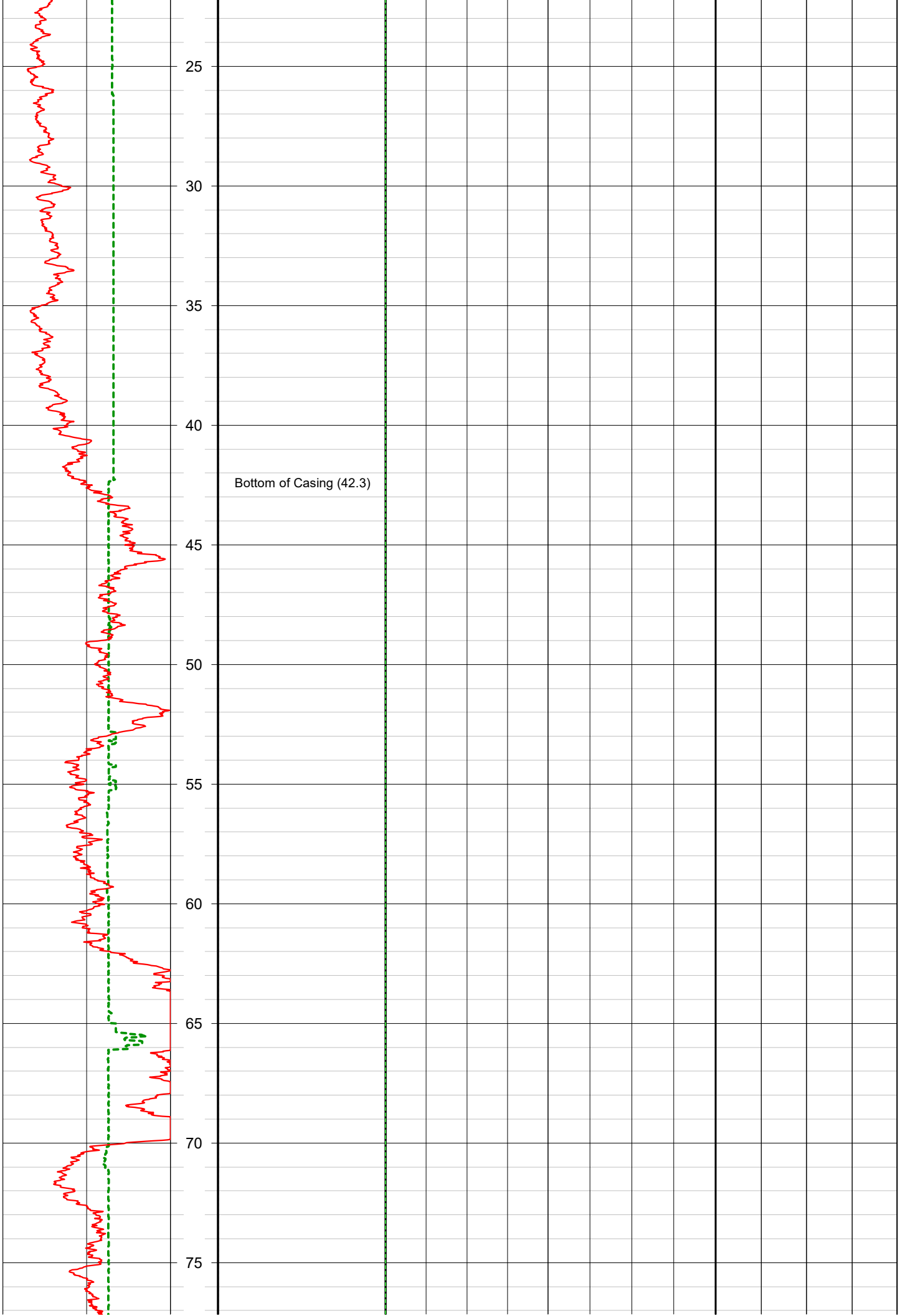
25
30
35
40
Bottom of Casing (42.3)
45
50
55
60
65
70
75

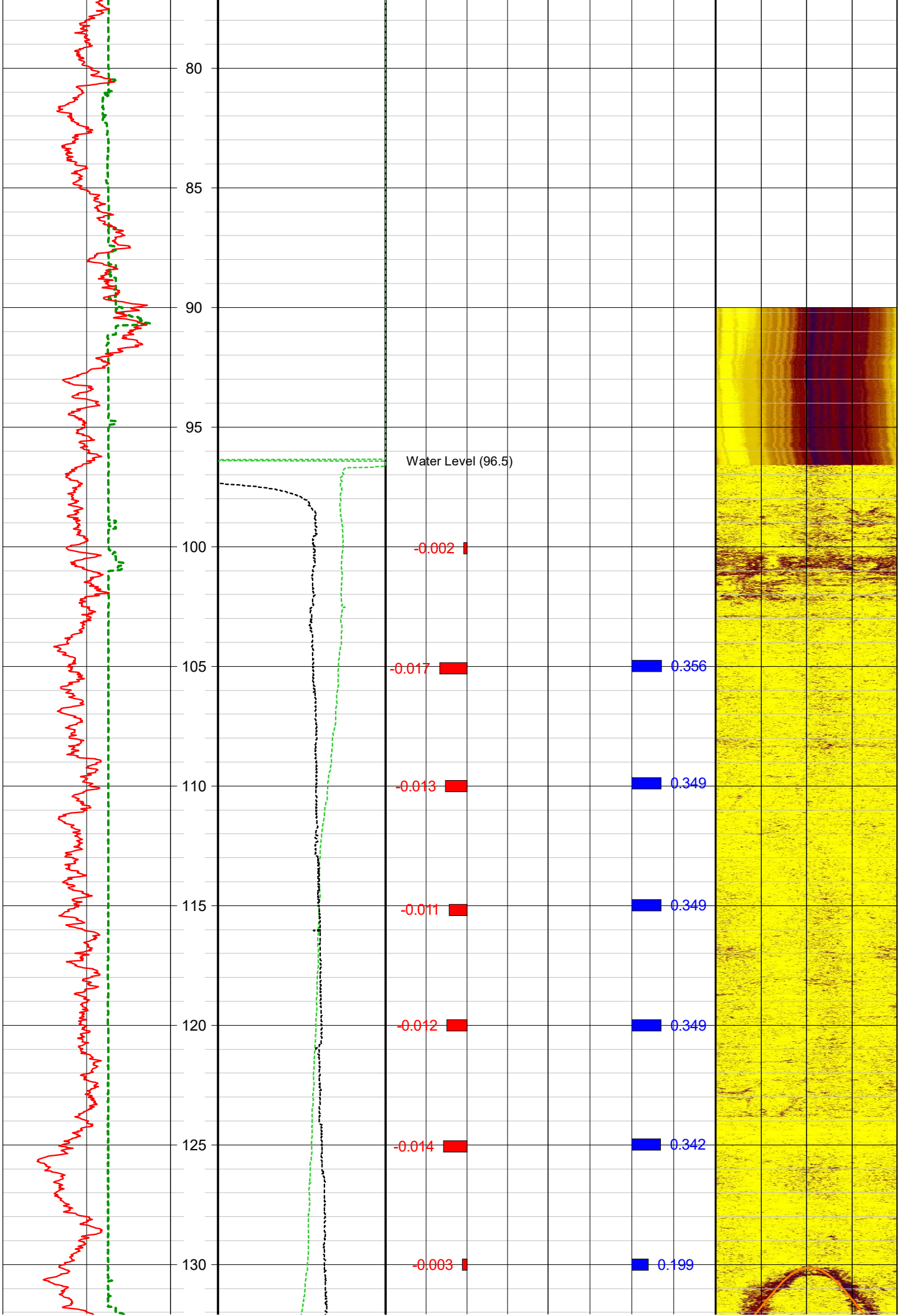
80
85
90
95
100
105
110
115
120
125
130
Water Level (96.5)
-0.002
-0.017
-0.013
-0.011
-0.012
-0.014
-0.003
0.356
0.349
0.349
0.349
0.342
0.199

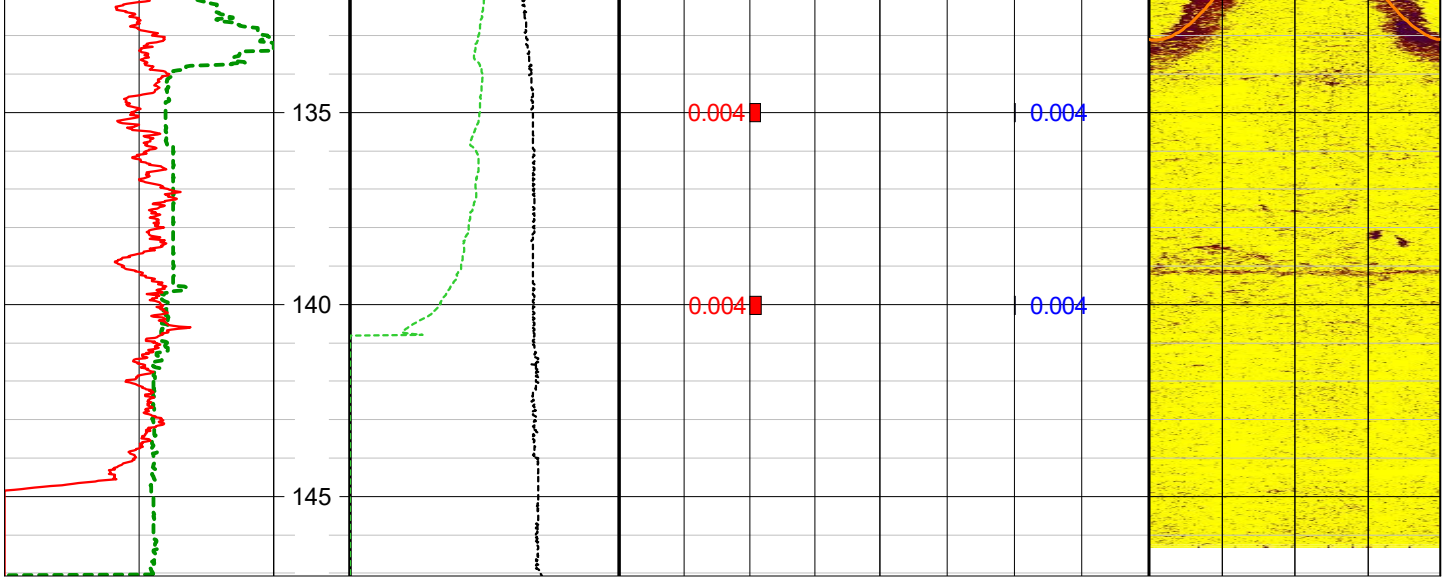
135
140
145
0.004
0.004
0.004
0.004

TETRA TECH

Well No. MW-1S-D

MONITORING WELL CONSTRUCTION SHEET
BEDROCK - STICK-UP

Project Name: Nockamixon TCE	Drilling Co.:	Boring No. MW-1S-D
Project No: 112IC08434-5007	Driller:	Date Completed: 12/19/2019
Site Name: Nockamixon TCE	Drilling Method: air rotary	Northing:
Geologist: Donald Whalen	Dev. Meth submersible pump	Easting:

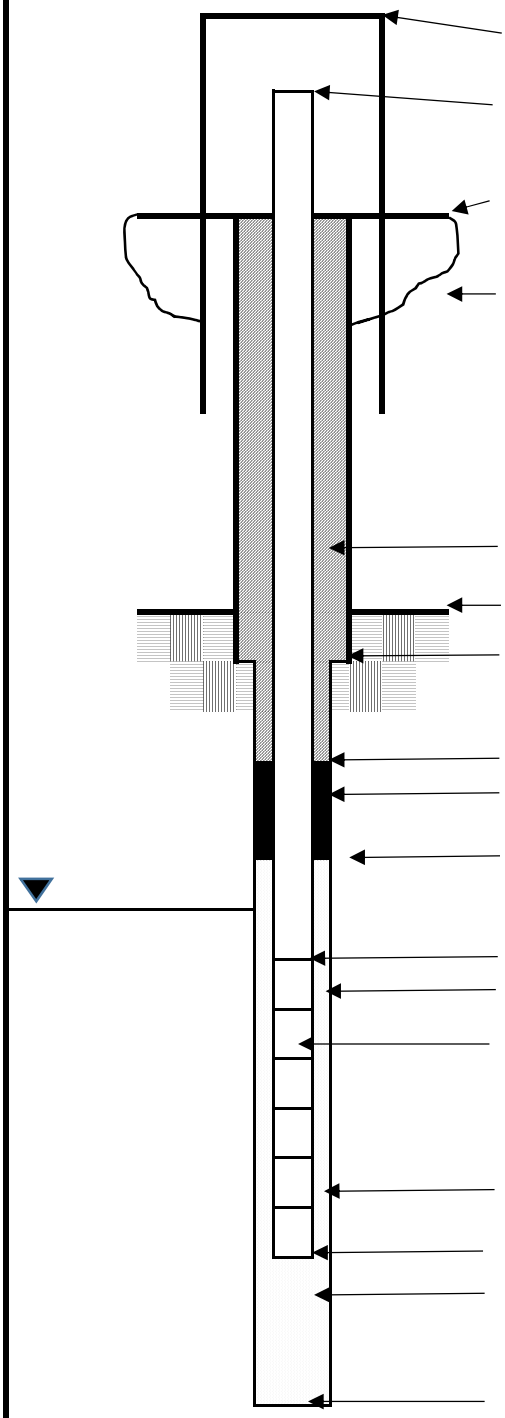

Elevation / Height Top of Protective Casing:	/
Elevation / Height Top of Riser:	/
Ground Elevation:	
Type of Surface Seal:	Concrete
Type of Protective Casing:	NA
I.D. of Protective Casing:	NA
Borehole Diameter:	6"
Type of Riser and I.D.:	Schedule 40 PVC
Type of Backfill:	cement/bentonite grout
Elevation / Depth Top of Rock:	/10'
Depth and Diameter of Surface Casing:	42', 6" steel
Elevation / Depth of Seal:	/ 107.5
Type of Seal:	bentonite chips to 120', #00 sand to 107.5
Elevation / Depth Top of Filter Pack:	/128'
Elevation / Depth Top of Screen:	/130'
Diameter of Hole in Bedrock:	6"
Type of Screen and I.D.:	2" schedule 40 PVC
Slot Size and Length:	0.010" x 10 '
Type of Filter Pack:	#1 quartz sand
Elevation / Depth Bottom of Screen:	/140'
Elevation / Depth Bottom of Filter Pack:	/140'
Type of Backfill Below Filter Pack:	#00 sand
Elevation / Depth Bottom of Hole:	/144.5'

Not To Scale

TETRA TECH

Well No. MW-1S-S

MONITORING WELL CONSTRUCTION SHEET
BEDROCK - STICK-UP

Project Name: Nockamixon TCE	Drilling Co.:	Boring No. MW-1S-S
Project No: 112IC08434-5007	Driller:	Date Completed: 12/19/2019
Site Name: Nockamixon TCE	Drilling Method: air rotary	Northing:
Geologist: Donald Whalen	Dev. Meth submersible pump	Easting:

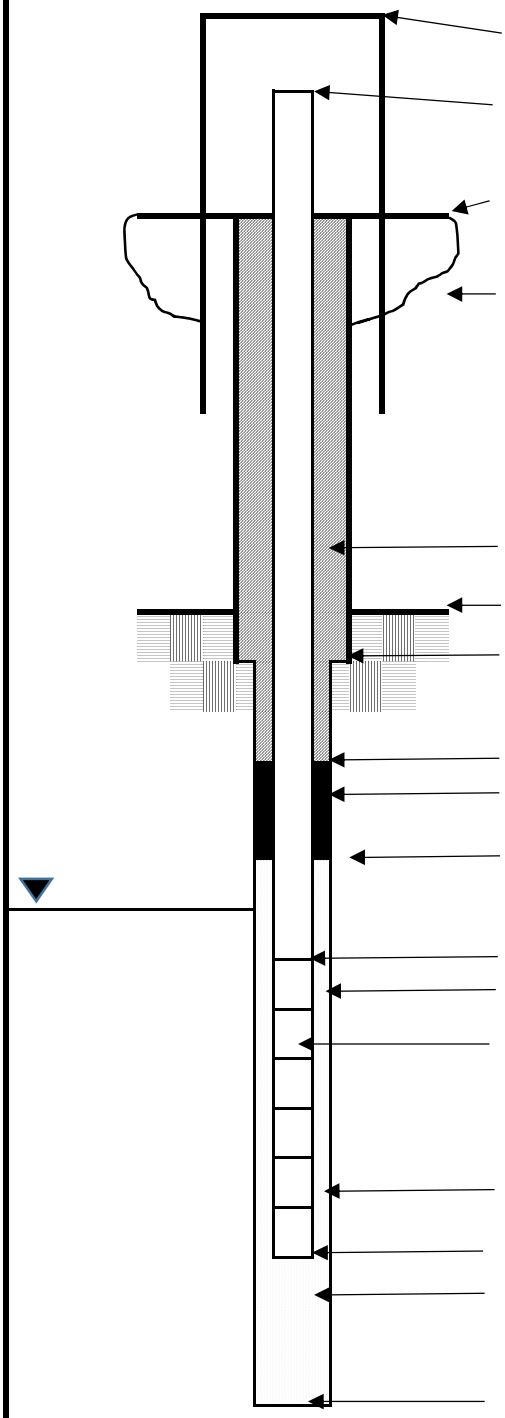

Elevation / Height Top of Protective Casing:	/
Elevation / Height Top of Riser:	/
Ground Elevation:	
Type of Surface Seal:	Concrete
Type of Protective Casing:	NA
I.D. of Protective Casing:	NA
Borehole Diameter:	6"
Type of Riser and I.D.:	Schedule 40 PVC
Type of Backfill:	cement/bentonite grout
Elevation / Depth Top of Rock:	/10'
Depth and Diameter of Surface Casing:	42', 6" steel
Elevation / Depth of Seal:	/79'
Type of Seal:	bentonite chips
Elevation / Depth Top of Filter Pack:	/84'
Elevation / Depth Top of Screen:	/87.5'
Diameter of Hole in Bedrock:	6"
Type of Screen and I.D.:	2" schedule 40 PVC
Slot Size and Length:	0.010" x 10 '
Type of Filter Pack:	#1 quartz sand
Elevation / Depth Bottom of Screen:	/107.5'
Elevation / Depth Bottom of Filter Pack:	/107.5'
Type of Backfill Below Filter Pack:	#00 sand, MW-1D below MW-1S
Elevation / Depth Bottom of Hole:	/144.5'

Not To Scale

APPENDIX B

65 BRENNAN ROAD MITIGATION DOCUMENTATION

Kilmartin, Kevin

From: Daniel Nuzzetti <dnuzzetti@obarsystems.com>
Sent: Friday, March 15, 2019 8:43 AM
To: Kilmartin, Kevin
Subject: 65 Brennan
Attachments: Image-1.png; Image-2.png; Image.png

Kevin,

Good morning. Everything went great yesterday.
Sub slab readings looking at the back of the house starting with the lower right hand corner (near the bilco doors) and working around counterclockwise.

T-1 : -0.0345
T-2 : -0.0110
T-3 : -0.0159
T-4 : -0.0145 (in gun room)

All readings in inches of water column.

Dan

Daniel Nuzzetti
Project Engineer / Vapor Intrusion Specialist
OBAR SYSTEMS INC.
2969 Route 23 South, Newfoundland, NJ 07435
Office: 1-800-949-OBAR | Cell: 201-953-4956

NOTICE

SOME PEOPLE SEE
7 SQUARE MILES
OF URBAN COMMERCE
WE SEE 300 MILES OF
PAVED

- After breaking for lunch, we returned to 84 Brennan Road to meet with the property owner regarding upcoming characterization work
- The property owner's main concerns involved a buried 'invisible fence' and septic drain field, within the mowed area south and east of the house. We discussed access routes and soil gas sampling areas which would avoid any damage to these buried lines.
- We then inspected the basement at 84 Brennan and noted the following:
    - The house has a partial basement and partial crawlspace. The crawlspace may be difficult to access.
    - Two sump pumps are present. One pumps constantly and the other rarely or never pumps, however both contained standing water
    - The homeowner indicated that when an addition was built, the basement under that area, which was completed to or below the bedrock, flooded.
    - Matt showed the homeowner a vapor pin and described its installation.
- Departed site @ 1430

Note: Digital photo log of images from VI mitigation system installation at 65 Brennan Road is attached.

Dustin A. Armstrong | Environmental Protection Specialist
Department of Environmental Protection | Southeast Regional Office
2 East Main Street | Norristown, PA 19401
Phone: 484.250.5723 | Fax: 484.250.5961
www.dep.pa.gov

PRIVILEGED AND CONFIDENTIAL COMMUNICATION
The information transmitted is intended only for the person or entity to whom it is addressed and may contain confidential and/or privileged material. Any use of this information other than by the intended recipient is prohibited. If you receive this message in error, please send a reply e-mail to the sender and delete the material from any and all computers. Unintended transmissions shall not constitute waiver of the attorney-client or any other privilege.

Kilmartin, Kevin

From: Armstrong, Dustin <darmstrong@pa.gov>
Sent: Tuesday, May 15, 2018 3:25 PM
To: Mcclennen, Bonnie; Patel, Ragesh
Cc: Staron, Richard; Bobik, Ted; Kilmartin, Kevin
Subject: Nockamixon TCE - Field Activity Report - 5/14/18
Attachments: Nock PhotoLog 5_14_18.pdf

On May 14, I traveled to the Nockamixon TCE Site with Ted Bobik, ECB Intern, to oversee vapor intrusion(VI) mitigation system installation activities at 65 Brennan Road, and to meet the owner of the 84 Brennan Road property, in advance of planned soil/soil gas/VI characterization work. The following is a brief description of my field activities and observations:

- Arrived onsite @ 0915
- Three personnel (led by Dan Nuzzetti) from OBAR, Inc. were onsite at 65 Brennan Rd., initiating mitigation system upgrade
- An electrical outlet was needed in the attic crawlspace for the mitigation fan
- OBAR installed four air flow monitoring points at distant corners from the mitigation vent, through the basement slab. Points resemble 'vapor pins', but can be closed with a simple bolt instead of a swage fitting.
- Pressure gauge and audible/visual alarm were mounted on exhaust pipe in the basement
- Matt Esposito from Tetra Tech arrived @ 1000. He had been caught in traffic.
- Upon startup of the mitigation fan, I noted that the fan noise was not notable at the top of the steps on the second floor.
- OBAR sealed the sump cover with silicone caulk.
- OBAR checked the exhaust pressure gauge with fan operating and noted that pressure was too high (2.5" water or equivalent to the fan's rating), indicating no air flow below the slab.
- After deactivating the fan, OBAR cut the exhaust pipe, and determined that the pipe was blocked at the bottom and contained standing water.
- OBAR penetrated the slab by drilling and chiseling with a hammer drill, then removed the existing pipe. OBAR determined that the pipe had been extended too far below the slab, into fine-grained QP (quarry process) stone, which did not allow air flow.
- OBAR purchased additional materials coupled and installed a new section of PVC at the correct depth (just below slab).
- After temporarily sealing the slab with duct tape, the fan was reactivated. Vent pressure was measured at 0.4" water in pipe and air flow readings were measured at testing points. All were within target parameters.
- OBAR initiated sealing the slab with silicone caulk and cement.
- While OBAR was replacing and sealing the new pipe, the homeowner reported a strong septic/sewer odor emanating from the second floor.
- OBAR traced the odor to a bath drain on the second floor and after deactivating and reactivating the fan, determined that the drain had been incorrectly vented to the mitigation system exhaust. When the fan is activated the air flow is sufficient to pull water from the drain trap in the bath tub, allowing septic/sewer vapors to escape into the home.
- OBAR tapped on the mitigation exhaust pipe to determine that the connection is located in the wall between the bathroom and adjacent bedroom
- The homeowner agreed to contact his builder and plumber to request resolution of the plumbing connection problem.
- The mitigation system will remain inactive, until the problem can be resolved.
- OBAR departed the site @ 1300

HSCA
DIGITAL PHOTOS

Pennsylvania Department of Environmental Protection
Southeast Regional Office - Environmental Cleanup Program

Site Name	Nockamixon TCE	**Date Photos Taken**	05/14/2018
Address	65 Brennan Rd.	**Municipality**	Nockamixon Twp.
		County	Bucks

Image 001: Sub slab air flow monitoring point with bolt and washer.

Image 002: OBAR personnel inspecting blocked sub slab mitigation vent pipe

Image 003: OBAR personnel penetrating slab at blocked mitigation vent pipe

Image 004: OBAR personnel removing blocked sub slab mitigation vent pipe

Image 005: Completed reinstalled sub slab mitigation vent pipe

Image 006: Mitigation exhaust gauge reading (0.4” water) after vent pipe reinstallation.

DEP Photographer	Signature	Phone #	484-250-**5723**
Dustin A. Armstrong, EPS		Date Signed:	5/15/2018

APPENDIX C

84 BRENNAN ROAD MITIGATION DOCUMENTATION

DIAGNOSTIC REPORT AND SYSTEM DESIGN

Site Address:

84 Brennan Road, Ottsville, Pennsylvania

Prepared for:

Mr. Kevin Kilmartin PG, CPG

Senior Geologist

Tetra Tech Inc.

234 Mall Boulevard, Suite 260

King of Prussia, PA 19406

Prepared by:

Mr. Daniel Nuzzetti

Project Engineer

OBAR Systems, Inc.

2969 Route 23

Newfoundland, NJ 07435

September 28, 2018

Table of Contents

1. Background 3
2. General Building Information 3
3. Mitigation Concepts 3
4. Diagnostic Method 3
5. Data Analysis and System Design 3
5.1. Analysis of data Series 4
5.1.1. Suction Point 1 4
5.1.2. Suction Point 2 4
5.2. Collective Analysis 4
5.3. Proposed Sub Slab Depressurization System Configurations 4
6. Mitigation System Components 4
6.1. System Blowers 4
6.2. Suction Points 5
6.3. System Piping 5
6.4. Pipe Hangers 5
6.5. Test Ports 5
6.6. Electrical 5
6.7. Alarm Panel and Gauges 5
6.8. System Labels 5
6.9. Permits 5
7. Post Installation 5
7.1. As Built Drawings 5
7.2. System Start Up and Commissioning 6
8. Costs 6
9. Warranty 6

Tables

Table 1 - Suction Point 1
Table 2 – Suction Point 2

Drawings

Drawing 1 – Diagnostic Locations
Drawing 2 – System Design

Attachments / Cut Sheets

Attachment 1 – Blowers
Attachment 2 – Pipe and supports
Attachment 3 – Test Ports

1. Background

Obar Systems was contacted to provide a proposal for building diagnostics and a sub slab depressurization system design for the home located at 84 Brennan Road. In accordance with the Obar Systems Diagnostic and Design Proposal, building diagnostics were performed on September 28, 2018.

2. General Building Information

This report and its appendices apply to the building located at 84 Brennan Road in Ottsville, PA. The building is a two story home with a large crawlspace and basement area.

3. Mitigation Concepts

Volatile Organic Compounds (VOCs) located in the soil are drawn into the building by the negative pressure of the building relative to the surrounding soil. As a gas, the VOCs enter the structure through cracks and openings and can migrate through the concrete floor and walls. A common remedy to reverse the intrusion process is Sub Slab Depressurization (SSD), which is a system that depressurizes the soil under the slab. The concept is that by creating a vacuum beneath the slab, the soil gases will be drawn into the system where they can be discharged to a safe location. During the commissioning sampling the environmental consultant should sample the systems' discharge to determine if treatment is required.

4. Diagnostic Method

The method used for diagnostic measurement and system design involved coring 2 5/8" suction holes in the concrete floors and 3/8" test holes at various distances from the suction holes. A specialized Sub Slab Diagnostic Vacuum (SSDV), capable of up to 120 cfm and a vacuum of 120 inches of water column ("w.c.) was used with a variable speed controller to define the flow and vacuum characteristics of the soil beneath the slab. The data obtained during the diagnostic investigation has been provided in the attached tables. The range of applied vacuum and flow rate used for each suction point was determined by evaluating the baseline data taken in the maximum flow and vacuum test performed at the beginning of each sampling series. The number of test point locations at each suction point was determined based on the results of the first sampling series at that location. The data collected at each suction point series includes; maximum vacuum and airflow at the suction point, vacuum 1 foot away from the suction point (SSP1), vacuum at each test point at multiple vacuum speeds or flow rates, the distance each test point is from the suction point, and the speeds that each series was run at.

5. Data Analysis and System Design

The information obtained from each suction point was examined independently to identify the associated area of influence (AOI) and estimated radius of influence (ROI) for that location during the applied test conditions. The test data from all the suction points was examined collectively to determine the number of full-scale SSD system suction points required to address the areas of

concern within the buildings. The test data was then used to determine the type and number of blowers required to effectively operate all of the full-scale SSD system suction points.

5.1. Analysis of data Series

For locations of all suction points and test points see the attached drawings, for full test results see the attached data tables.

5.1.1. Suction Point 1

Suction Point 1 (SP1) was located in the home's basement area. The purpose of this suction point was to evaluate the ROI from full scale suction points installed in the basement. Crush stone was encountered below the slab and an ROI in excess of 25 feet was observed. The entire basement can be depressurized with a single centrally located suction point.

5.1.2. Suction Point 2

Suction Point 2 (SP2) was located in the home's crawlspace. The purpose of this suction point was to evaluate the ROI from full scale suction points installed in the crawlspace. Tight, moist, native soils were encountered below the slab, an ROI of approximately 10 feet was observed at 10 inches of water column and less than 5 cfm airflow yield.

5.2. Collective Analysis

The full-scale SSDS design was developed by using the diagnostic test results to produce a map that projects the estimated ROIs around suction points installed in locations that cover the areas of concern. The SSDS suction point ROI was estimated by examining the vacuum data measured during the diagnostic survey at nearby test points. The required system operating vacuums were determined by using values measured at the diagnostic head and the SSPs, along with performance tables for the Sub Slab Diagnostic Vacuum.

In general, when selecting the full-scale blowers, the vacuum measured at the SP is used as the system design target when it is more than 10 times greater than the SSP vacuum. The SSP vacuum is used as the target when the SP vacuum is less than 5 times the SSP vacuum. Professional judgment and experience is used to determine required system vacuum when diagnostic testing results are between the above two ranges.

5.3. Proposed Sub Slab Depressurization System Configurations

A single suction point mitigation system paired with one GBR45 is being proposed to depressurize the entire basement area and a single GBR76-SOE [aired with 3 suction points is being proposed to depressurize the crawl space. Because of the extended pipe run from the basement, there will be a condensate drop in the crawlspace for the basement system.

6. Mitigation System Components

6.1. System Blowers

The blowers will be installed on the exterior of the building. The blower exhaust will terminate 10 feet from any intake or opening into the building it is not at least 2 feet above.

6.2. Suction Points

The suction points will be installed by coring 3 ½ inch and 2 ½ inch holes through the slab and excavating sub slab material. The suction points will be back filled with crushed stone following clean out.

6.3. System Piping

All system piping and fittings within the building will be 2 and 3 inch PVC pipe. Overhead piping will be installed in the locations shown on the attached drawing. All overhead piping will be installed as high as possible within the building and without the possibility of water traps. All overhead piping must have pitch back to suction points in order to drain condensation. The suction point will have a vertical riser pipe that connects into the overhead piping. The vertical riser pipes will be secured to the wall or column and concreted into the slab. Cut sheets for the pipe and fittings are attached.

6.4. Pipe Hangers

All pipes will be supported according to local code requirements. Overhead pipe will be secured with threaded rod, and swivel loop hangers. Vertical pipe will be secured to the walls with strut, strut clamps, and metal pipe straps. Cut sheets for acceptable pipe hanging hardware are attached.

6.5. Test Ports

Sub Slab test ports will be installed within the system's radius of influence to confirm sub slab vacuum. 6 permanent sub slab test ports will be installed throughout the building. A riser test port will be installed in the riser pipe for vacuum and airflow sampling.

6.6. Electrical

All electrical work will be performed by a licensed electrician in accordance with all state and local codes. The fans will required 110 volts and must be on a dedicated breaker.

6.7. Alarm Panel and Gauges

Each fan system will feature a vacuum gauge and audible/ visual alarm.

6.8. System Labels

All exposed system piping will be labeled with a sticker indicating that the system is a vapor intrusion mitigation system. A sticker with the contact information of the installer will be located near the alarm.

6.9. Permits

Building and electrical permits will be obtained prior to installing the SSDS. The associated permit costs will be added to the final system cost.

7. Post Installation

7.1. As Built Drawings

As-built drawings will be provided that show system locations, the monitoring and alarm location, and sub-slab vacuum monitoring test port locations.

7.2. System Start Up and Commissioning

Upon system start up the mitigation fan will be tuned for optimal efficiency. The system's applied vacuum and airflow will be measured and reported. The sub slab pressure differentials at the permanent test ports will be measured and reported. A commissioning report that includes; commissioning data, operations and maintenance procedures, and as built drawings will be prepared and submitted.

8. Costs

System Installation and Crawlspace Sealing: $9,800.00

9. Warranty

OBAR Systems guarantees that all systems designed and installed by OBAR Systems will meet a sub-slab pressure differential of -0.004 "w.c. (as initially indicated in the diagnostic proposal) for one year from the date of installation.

Suction Point # :	S1			
Location / Description :	On interior wall			
Soil Description	Crsuhed stone			
Temperature :	58°F			
Weather :	Clear			
Background ΔP :	0.0003			
	Distance (ft.)	**Series 1**	**Series 2**	**Max**
Airflow Yield (cfm)		60	40	100
Applied Vacuum (''w.c.)		1.8	0.8	4.5
SSP 1 (1' from applied)		0.2	0.12	0.5
T-1	10	0.0251	0.0115	
T-2	12	0.0245	0.0105	
T-3	25	0.0157	0.0078	
T-4	27	0.0172	0.0081	

Test Point data is reported in inches of water column.
All pressure values negative unless indicated otherwise.
BG: Background

Suction Point # :	S2		
Location / Description :	In crawlspace		
Soil Description	Tight compacted and moist native soil		
Temperature :	58°F		
Weather :	Clear		
Background ΔP :	0.0002		
	Distance (ft.)	**Series 1**	**Max**
Airflow Yield (cfm)		<5	<5
Applied Vacuum (''w.c.)		10	54
SSP 1 (1' from applied)		0.1	0.5
T-5	5	0.0280	
T-6	10	0.0047	
T-7	15	0.0001	
T-8	20	BG	

Test Point data is reported in inches of water column.
All pressure values negative unless indicated otherwise.
BG: Background

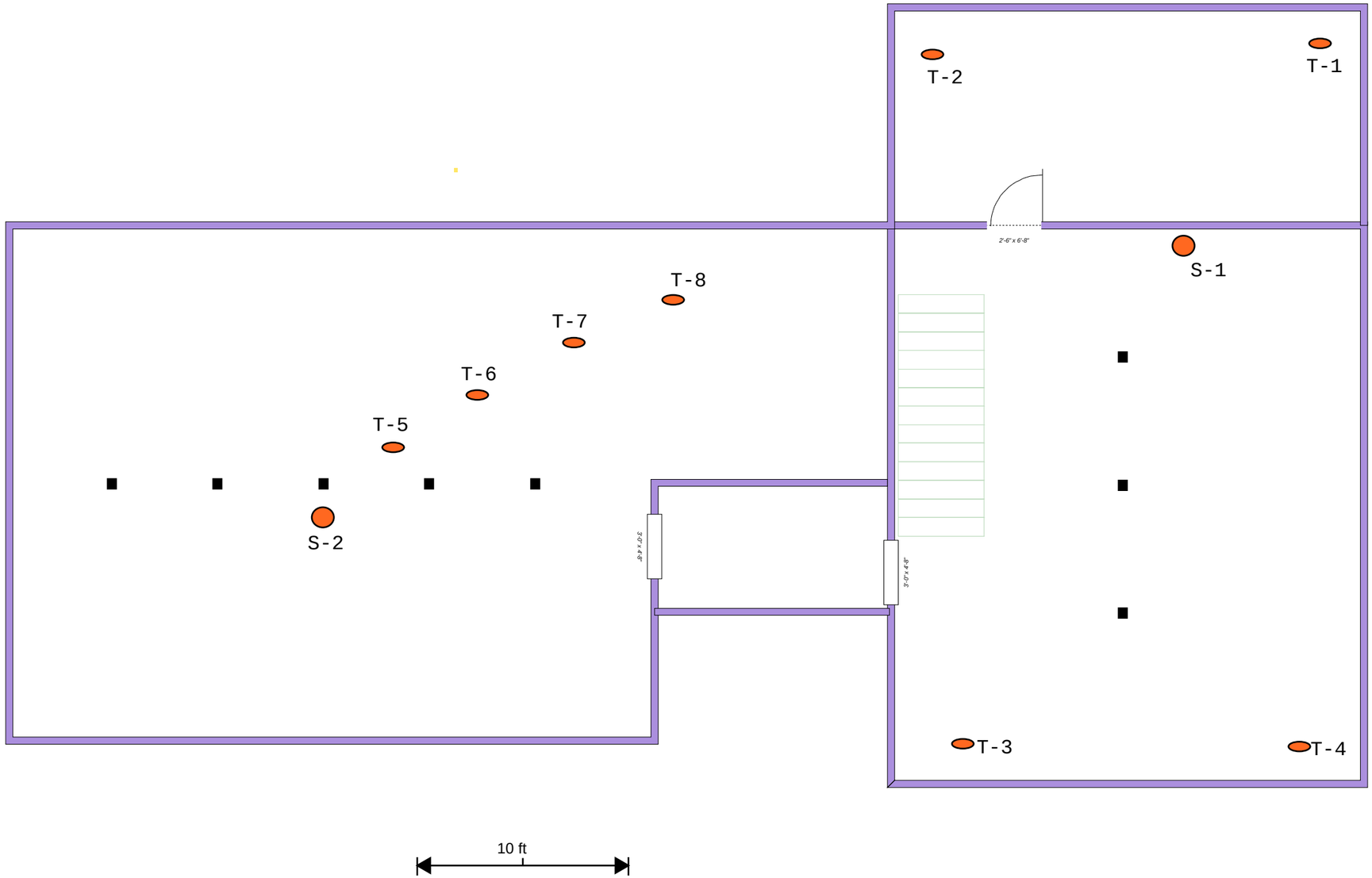

OBAR Systems Inc. 2969 Rt. 23 South Newfoundland, NJ 07435 OBAR SYSTEMS, INC.	LEGEND: Diagnostic Suction Hole Diagnostic Test Hole	Mitigation Specialist Gunnar Barr NJDEP MIS 10056	Drawn By: DN Checked By: GB	SITE ADDRESS: 84 Brennan Rd, Ottsville, PA SHEET NAME: Vapor Intrusion Mitigation System Diagnostic Locations	DATE: 9/28/2018

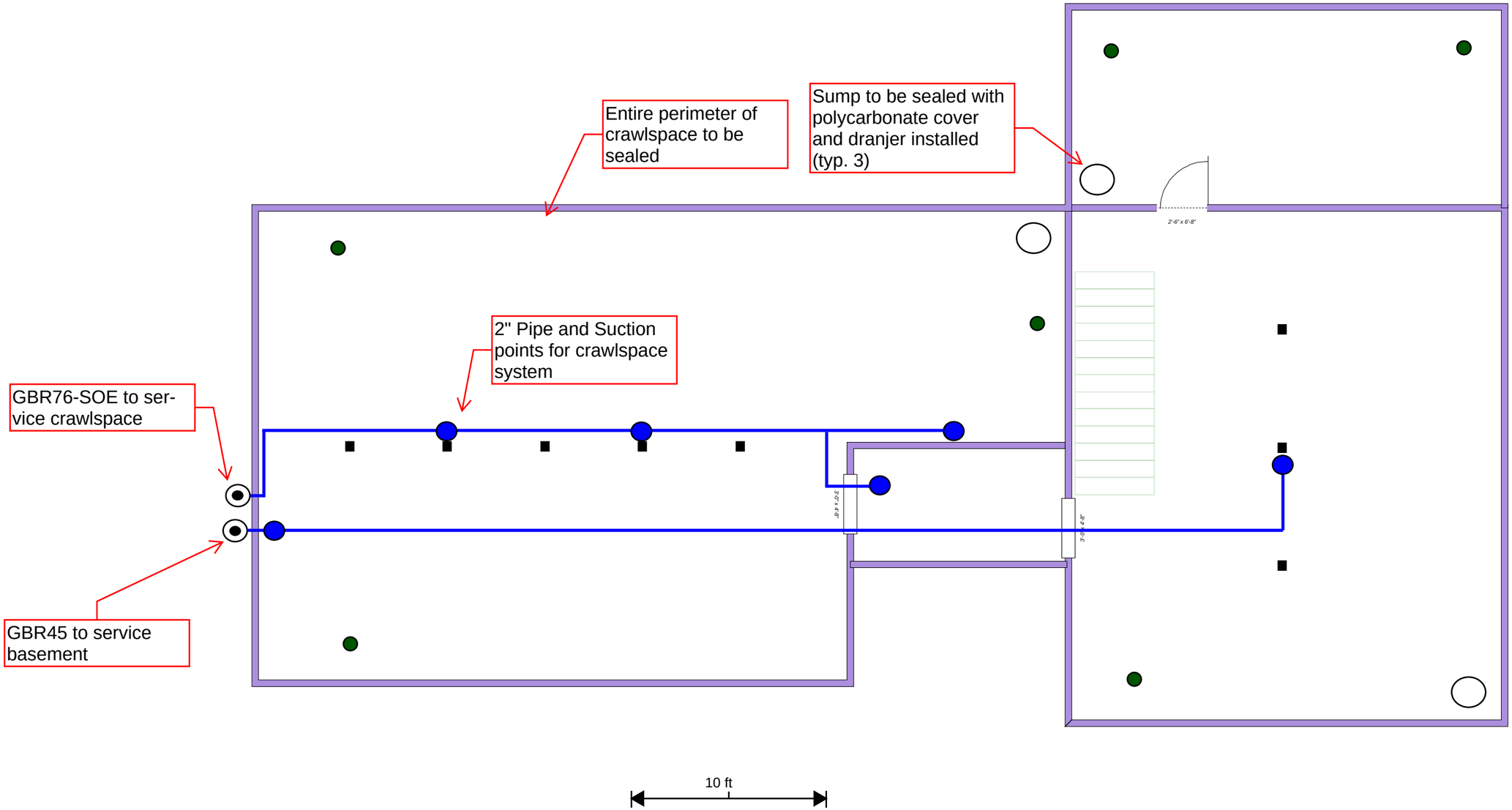

OBAR Systems Inc. 2969 Rt. 23 South Newfoundland, NJ 07435 OBAR SYSTEMS, INC.	LEGEND: 3" Suction Point Overhead Pipe Mitigation Fan Test Ports	Mitigation Specialist Gunnar Barr NJDEP MIS 10056	Drawn By: DN Checked By: GB	SITE ADDRESS: 84 Brennan Rd, Ottsville, PA SHEET NAME: Vapor Intrusion Mitigation System Design	DATE: 9/28/2018

THE OBAR GBR76

COMPACT RADIAL BLOWER

Based on 25 years of experience and 2 years of research and development, the patent pending GBR series of compact radial blowers provide the perfect combination of performance and design.

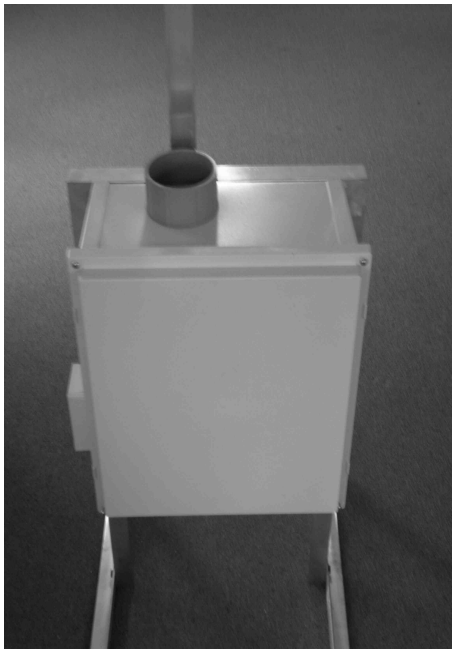

GBR76 WITH ROOF MOUNT

PERFORMANCE

- GBR76 SOE 16” WC @ 0 Max flow 155 CFM.
- GBR76 UD 40” WC @ 0 Max flow 195 CFM.
- Built in speed control to customize performance.
- Condensate bypass built in.
- 12 month warranty 40,000 hr sealed bearings.

DESIGN

- Our modular design means the blower and manifold assembly can be removed and replaced as a unit. This makes repairs cost effective and easy and allows contractors to upgrade systems simply by swapping assemblies.
- The GBR series is based on a bypass blower designed to handle combustible materials.
- The housing is not required to be air tight so you can add gauges and alarms without compromising the system.
- Built in condensate bypass.
- Built in speed control.
- Quick disconnect electrical harness.
- All UL listed components including UL listed enclosure for outside use.
- Wall fastening lugs included.
- GBR series roof and wall mounts available to quickly configure the blowers for your installation while providing a custom built look.
- Compact design 16”x 14”x 8” weighing only 18 lbs.
- 3” schedule 40 inlet and exhaust.
- Universal Drive accepts voltage from 120-240V without alteration

GBR76 SOE	0”	2”	4”	6”	8”	10”	12”	16”	Wattage
SOE 16	150	140	129	118	105	90	75	35	150-320
SOE 12	125	115	100	83	62	39	0		110-200
SOE 8	105	90	70	42	0				60-120
SOE 4	75	50	0						37-50

GBR SOE performance using built in potentiometer set at sealed vacuums of 16, 12, 8, and 4” WC

GBR76 UD	0”	10”	20”	30”	37”	Wattage
110V	195	158	118	63	20	700-870
220V	197	162	130	89	50	800-1100

Blower Specifications

Notes:

- **Input Voltage Range:** 108-132 Volts AC RMS, 50/60 Hz, single phase.
- **Input Current:** 6 amps AC RMS
- **Operating Temperature (Ambient Air and Working Air):** 0°C to 50°C
- **Storage Temperature:** -40°C to 85°C
- **Dielectric Testing:** 1500 Volts AC RMS 60 Hz applied for one second between input pins and ground, 3mA leakage maximum.
- **Speed Control Methods:** PWM (Pulse Width Modulation) (1 kHz to 10 kHz)
  0 to 10 VDC speed control.
  Mechanical: A potentiometer is available for speed control of the blower. The potentiometer can be preset for a specific speed. Access for speed adjustment located in motor housing.
- **Approximate Weight:** 4.8 Lbs. / 2.2 Kg
- **Regulatory Agency Certification:** Underwriters Laboratories Inc. UL507 Recognized under File E94403 and compliant under the CE Low Voltage Directive 2006/95/EC.
- **Design Features:** Designed to provide variable airflow for low NOx & CO emission in high efficiency gas fired combustion systems. Built with non-sparking materials. Blower housing assembly constructed of die cast aluminum. Impeller constructed from hardened aluminum. Rubber isolation mounts built into blower construction to dampen vibration within the motor. Two piece blower housing assembly sealed with O-ring gasket for combustion applications. Customer is responsible to check for any leakage once the blower is installed into the final application.
- **Miscellaneous:** Blower inlet, discharge, and all motor cooling inlet and discharge vents must not be obstructed. Motor ventilation air to be free of oils and other foreign particles, (i.e. breathing quality air). Blower is to be mounted so ventilation air cannot be re-circulated.
  POWER CONNECTION: Blower connector, AMP Universal MATE-N-LOK, part no. 1-350943-0.
  SPEED CONNECTION: Blower connector, Molex Mini-Fit Jr., part no. 39-30-3056.
  Mating harnesses available upon request.

Enclosure Specifications

Rating:

Ingress Protection (EN 60529): 66/67

Electrical insulation: Totally insulated

Halogen free (DIN/VDE 0472, Part 815): yes

UV resistance: UL 508

Flammability Rating (UL 746 C 5): complies with UL 508

Glow Wire Test (IEC 695-2-1) °C: 960

NEMA Class: UL Type 4, 4X, 6, 6P, 12 and 13

Certificates: Underwriters Laboratories

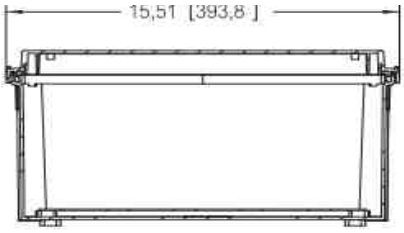

Screw cover

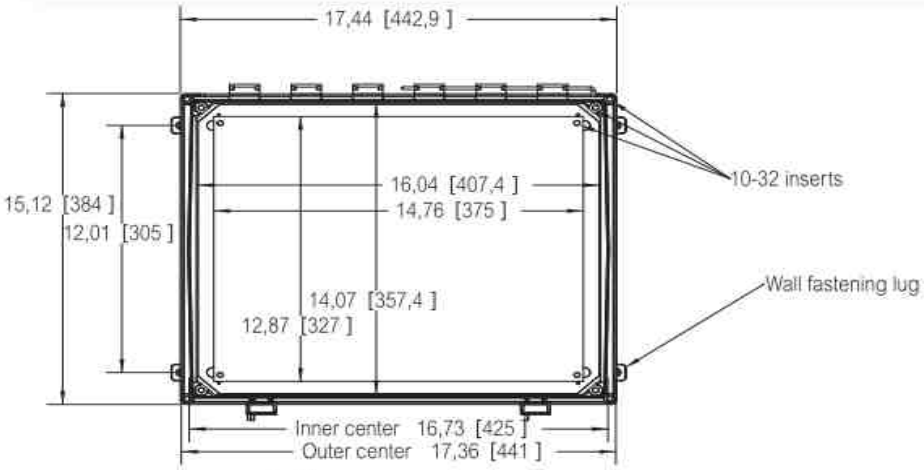

Top View - cover removed

GBR 45 Submittal Sheet

Fearures:

- UV resistant, UL Listed durable plastic
- Vibration welded seam ensures leak proof housing
- Watertight electrical terminal box
- Totally enclosed for protection
- Automatic reset thermal overload protection

Dimensions:

10” X 10” X 10.5”

Performance:

- 120V
- .72 Amps
- 60HZ
- 190 CFM @ .20” W.C.

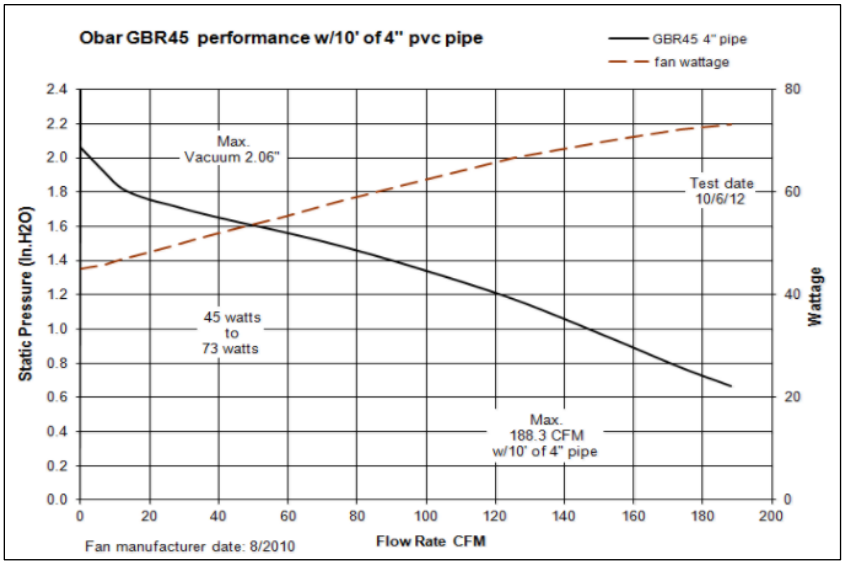

CHARLOTTE
PIPE AND FOUNDRY COMPANY®

SUBMITTAL FOR CHARLOTTE PIPE®
PVC SCHEDULE 40 SOLID WALL PIPE AND PVC DWV FITTING SYSTEM

Date: _____

Job Name: _____ Location: _____

Engineer: _____ Contractor: _____

Scope:
This specification covers PVC Schedule 40 solid wall pipe and PVC DWV fittings used in sanitary drain, waste and vent (DWV), sewer and storm drainage applications. This system is intended for use in non-pressure applications where the operating temperature will not exceed 140° F.

Specification:
Pipe shall be manufactured from virgin rigid PVC (polyvinyl chrloride) vinyl compounds with a cell class of 12454 as identified in ASTM D 1784. PVC Schedule 40 pipe shall be Iron Pipe Size (IPS) conforming to ASTM D 1785 and ASTM D 2665. Injection molded PVC DWV fittings shall conform to ASTM D 2665. Fabricated PVC DWV fittings shall conform to ASTM F 1866. All pipe and fittings shall be manufactured in the United States. All systems shall utilize a separate waste and vent system. Pipe and fittings shall conform to NSF International Standard 14.

Installation:
Installation shall comply with the latest installation instructions published by Charlotte Pipe and Foundry and shall conform to all applicable plumbing, fire, and building code requirements. Buried pipe shall be installed in accordance with ASTM D 2321 and ASTM F 1668. Solvent cement joints shall be made in a two-step process with primer conforming to ASTM F 656 and solvent cement conforming to ASTM D 2564. The system shall be protected from chemical agents, fire-stopping materials, thread sealant, plasticized-vinyl products or other aggressive chemical agents not compatible with PVC compounds. The system shall be hydrostatically tested after installation.
WARNING! Never test with or transport/store compressed air or gas in PVC pipe or fittings. Doing so can result in explosive failures and cause severe injury or death.

Referenced Standards:

ASTM D 1784:	Rigid Vinyl Compounds
ASTM D 1785:	PVC Plastic Pipe, Schedule 40
ASTM D 2665:	PVC Drain, Waste and Vent Pipe and Fittings
ASTM D 2564:	Solvent Cements for PVC Pipe and Fittings
ASTM D 2321:	Underground Installation of Thermoplastic Pipe (non-pressure applications)
ASTM F 656:	Primers for PVC Pipe and Fittings
ASTM F 1668:	Procedures for Buried Plastic Pipe
ASTM F 1866:	Fabricated PVC DWV Fittings
NSF Standard 14:	Plastic Piping Components and Related Materials

MADE IN USA

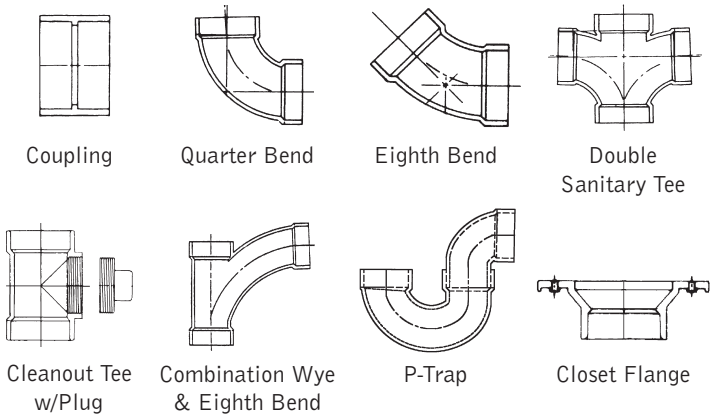

Not all fitting patterns shown

PVC Schedule 40 DWV Pipe

PVC Schedule 40 DWV Pipe

NSF

PVC SCHEDULE 40 (WHITE)		PLAIN END		PVC 1120		ASTM D 2665
PART NO.	NOM. SIZE	UPC # 611942-	QTY. PER SKID	AVG. OD (IN.)	MIN. WALL (IN.)	WT. PER 100 FT. (LBS.)
PVC 7100*	1¼″x10′	03945	2120′	1.660	.140	42.4
PVC 7100*	1¼″x20′	03946	4240′	1.660	.140	42.4
PVC 7112*	1½″x10′	03947	1650′	1.900	.145	51.8
PVC 7112*	1½″x20′	03948	3300′	1.900	.145	51.8
PVC 7200*	2″x10′	03949	1110′	2.375	.154	69.5
PVC 7200*	2″x20′	03950	2220′	2.375	.154	69.5
PVC 7300*	3″x10′	03951	1040′	3.500	.216	144.2
PVC 7300*	3″x20′	03952	920′	3.500	.216	144.2
PVC 7400†	4″x10′	03953	600′	4.500	.237	205.5
PVC 7400†	4″x20′	03954	1200′	4.500	.237	205.5
PVC 7500†	5″x20′	04837	760′	5.563	.258	272.5
PVC 7600†	6″x10′	03955	280′	6.625	.280	361.2
PVC 7600†	6″x20′	03956	560′	6.625	.280	361.2
PVC 7800†	8″x10′	13087	180′	8.625	.322	543.6
PVC 7800†	8″x20′	03958	360′	8.625	.322	543.6
PVC 7910†	10″x20′	03959	220′	10.750	.365	770.7
PVC 7912†	12″x20′	03961	120′	12.750	.406	1019.0
PVC 7914†	14″x20′	04862	60′	14.000	.437	1205.0
PVC 7916†	16″x20′	04918	60′	16.000	.500	1575.7

* Dual Marked ASTM D 1785 & ASTM D 2665.
† Triple Marked ASTM D 1785 & ASTM D 2665 & ASTM F 480.

Charlotte Pipe and Foundry Company • P.O. Box 35430 Charlotte, NC 28235 • (800) 438-6091 • www.charlottepipe.com

Charlotte Pipe and Charlotte Pipe and Foundry Company are registered trademarks of Charlotte Pipe and Foundry Company.

FIG. 100

SPLIT RING EXTENSION HANGER

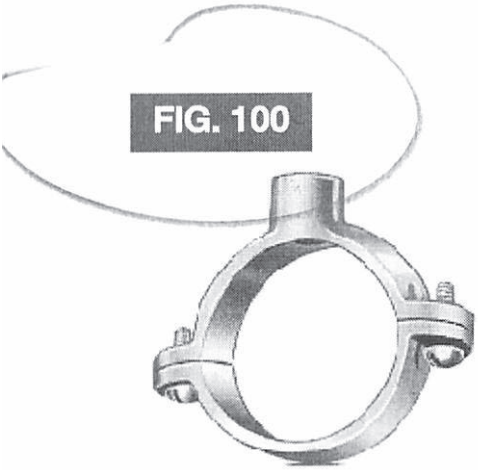

MATERIAL: Malleable iron, stainless steel.
FINISH: Black or electro galvanized.
SERVICE: For suspension of non-insulated stationary pipe lines.
ORDERING: Specify pipe size, figure number and finish.
APPROVALS: Complies with Federal Specification WW-H-171E Type 25 and Manufacturers' Standardization Society SP-58 & SP-69 Type 12.

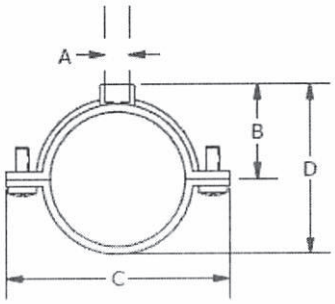

PIPE SIZE	A	B	WEIGHT/C APPROX.	MAX REC. LOAD, LB.
3/8*	3/8	11/16	16	180
1/2	3/8	13/16	17	180
3/4	3/8	15/16	20	180
1	3/8	1 1/16	21	180
1 1/4	3/8	1 1/4	29	180
1 1/2	3/8	1 5/16	31	180
2	3/8	1 5/8	35	180
2 1/2*	1/2	1 15/16	57	300
3*	1/2	2 3/8	72	300
4*	1/2	2 7/8	116	300

*Sizes 3/8, 2 1/2, 3 and 4 are hinged style

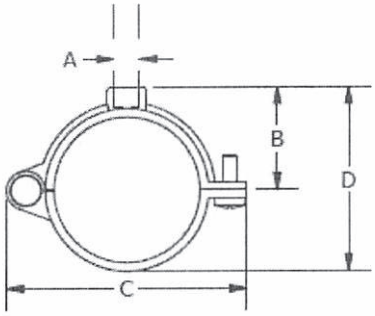

FIG. 105

HANGER FLANGE

MATERIAL: Malleable iron, stainless steel.
FINISH: Black or electro-galvanized.
SERVICE: For attachment to wood beams, ceilings or floors.
ORDERING: Specify tap size, figure number and finish.

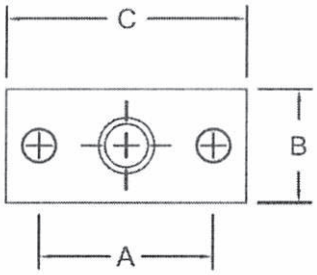

BOLT TAP	A	B	C	WEIGHT (APPROX.) PER 100
3/8	1 15/16	1 15/16	2 3/4	18
1/2	1 15/16	1 15/16	2 3/4	17

FIG. 110

ADJUSTABLE SWIVEL RING HANGER, STD. & NFPA

MATERIAL: Carbon steel.
FINISH: Electro-galvanized.
SERVICE: Recommended for suspension of non-insulated, stationary pipe lines and conduit. Approved for use without additional locking nuts normally required with pipe hangers.
ORDERING: Specify pipe size and figure number.
APPROVALS: Underwriter's Laboratories Listed for ¾"-2" and Factory Mutual Approved for ¾"-4". Complies with Federal Specification WW-H-171E Type 10 and Manufacturers' Standardization Society SP-58 & SP-69 Type 10.

PIPE SIZE	WEIGHT PER 100	MAX. REC. LOAD LB.	DIMENSIONS					MATERIAL SIZE	ROD SIZE	NFPA ROD SIZE
			A	B	C	D	E			
½	11	400	2¼	⅞	1½	2⅝	3 3/16	16ga x ⅝	⅜	⅜
¾	11	400	2 1/16	⅞	1¼	2½	3 3/16	16ga x ⅝	⅜	⅜
1	12	600	2	⅞	1⅛	2⅝	3⅜	16ga x ⅝	⅜	⅜
1¼	13	600	2	⅞	1⅛	2¾	3¾	16ga x ⅝	⅜	⅜
1½	14	600	1⅞	⅞	1⅛	2⅞	4	16ga x ⅝	⅜	⅜
2	15	600	2⅛	⅞	1¼	3¼	4⅝	16ga x ⅝	⅜	⅜
2½	32	600	2½	1⅛	1⅜	3¾	5⅝	13ga x ¾	½	⅜
3	34	600	2⅞	1⅛	2⅞	4½	6¼	13ga x ¾	½	⅜
3½	37	600	3	1⅛	1¾	5	7	13ga x ¾	½	⅜
4	78	1250	2¾	1⅛	1¾	5	7⅜	11ga x 1	⅝	⅜
5	94	1250	3¼	1⅛	1⅞	6	9⅛	11ga x 1	⅝	½
6	120	1250	3¾	1½	2½	7¼	10⅝	11ga x 1	¾	½
8	145	1250	4½	1½	3⅛	8⅞	13⅛	11ga x 1	¾	½

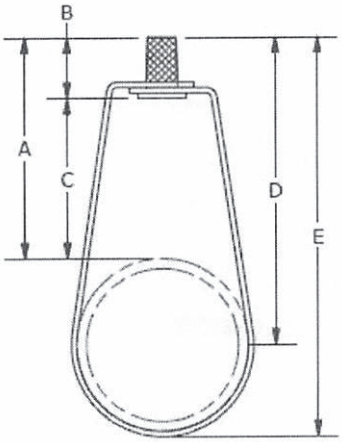

FIG. 115

ADJUSTABLE BAND HANGER

MATERIAL: Carbon steel.
FINISH: Black, electro-galvanized.
SERVICE: For suspension of non-insulated, stationary pipe lines and conduit.
ORDERING: Specify pipe size, figure number and finish.
APPROVALS: Complies with Federal Specification WW-H-171E Type 7 and Manufacturers' Standardization Society SP-58 & SP-69 Type 7.

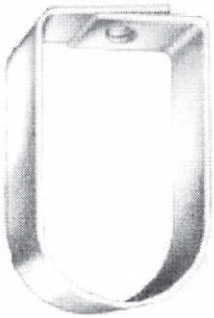

PIPE SIZE	MATERIAL SIZE	MAX. REC. LOAD LB.	A	B	C	E	F	WEIGHT PER 100
⅜	16ga x ⅞	610	⅜	2 5/16	2⅝	1 9/16	1⅜	11
½	16ga x ⅞	610	⅜	2 3/16	2⅝	1 7/16	1¼	11
¾	16ga x ⅞	610	⅜	2 1/16	2⅝	1 5/16	1	12
1	16ga x ⅞	610	⅜	2 1/16	2 11/16	1 5/16	1 5/16	12
1¼	16ga x ⅞	610	⅜	2 9/16	3 7/16	1 13/16	1¼	14
1½	16ga x ⅞	610	⅜	2¾	3 11/16	2	1 3/16	16
2	16ga x ⅞	610	⅜	3	4 3/16	2¼	1 3/16	23
2½	14ga x 1	970	½	3 7/16	4⅞	2 7/16	1¼	28
3	13ga x 1	970	½	4¼	6	3¼	1⅝	41
3½	13ga x 1	970	½	4⅛	6⅛	3⅛	1⅜	44
4	11ga x 1	1250	½	4½	6¾	3¼	1⅜	87
5	11ga x 1	1250	½	5	7¾	4¾	1¼	100
6	11ga x 1½	1600	¾	6 11/16	10	5 3/16	2⅛	160
8	11ga x 1½	1800	¾	7 9/16	11⅞	6 13/16	2	260

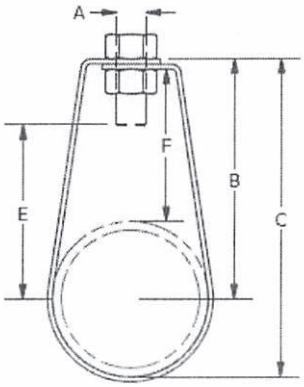

FIG. 200 ADJUSTABLE CLEVIS HANGER

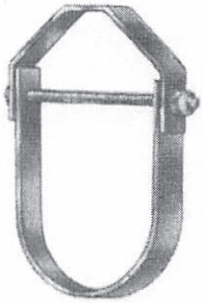

MATERIAL: Carbon steel and 304/316 stainless steel.
FINISH: Black, electro or hot-dipped galvanized.
SERVICE: For the suspension of non-insulated, stationary pipe lines.
ORDERING: Specify pipe size, figure number and finish.
APPROVALS: Underwriters Laboratories Listed and Factory Mutual Approve ¾"-8". Complies with Federal Specification WW-H-171E Type 1 and Manufacturers' Standardization Society SP-58 & SP-69 Type 1.

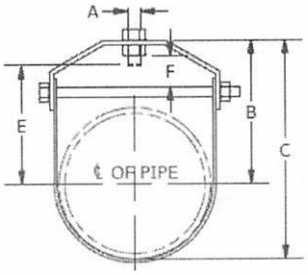

PIPE SIZE	SIZE OF STEEL		A	B	C	E	F	WGT. PER 100	MAX. REC. LOAD, LBS.
	UPPER	LOWER							
½	13ga x ⅞	13ga x ⅞	⅜	1 11/16	2 1/16	1 5/16	7/16	18	610
¾	13ga x ⅞	13ga x ⅞	⅜	1 11/16	2 9/16	1 5/16	7/16	18	610
1	13ga x ⅞	13ga x ⅞	⅜	2 1/16	2 11/16	1 5/8	5/8	22	610
1¼	13ga x ⅞	13ga x ⅞	⅜	2½	3 3/16	2 1/16	⅞	26	610
1½	12ga x ⅞	12ga x ⅞	⅜	2⅞	3 11/16	2 7/16	1 1/16	34	610
2	12ga x ⅞	12ga x ⅞	⅜	3 5/16	4 7/16	2⅞	1¼	38	610
2½	9ga x 1 3/16	10ga x 1 3/16	½	4½	5⅞	3⅞	1 15/16	86	1130
3	9ga x 1 3/16	10ga x 1 3/16	½	4¾	6½	4 3/16	1¾	96	1130
3½	8ga x 1 3/16	10ga x 1 3/16	½	5⅞	7 15/16	5 5/16	2 9/16	114	1130
4	8ga x 1 3/16	10ga x 1 3/16	⅝	5 15/16	8 3/16	5 3/16	2⅛	126	1430
5	4ga x 1¼	8ga x 1¼	⅝	5 11/16	8 7/16	4 15/16	1 7/16	220	1430
6	3ga x 1½	8ga x 1½	¾	6 13/16	10⅛	5 15/16	1¾	300	1940
7	3ga x 1½	8ga x 1½	¾	7 13/16	11⅝	6 15/16	2	420	2000
8	3ga x 1¾	8ga x 1¾	¾	8 1/16	12 7/16	7⅛	1⅞	450	2000
10	⅜ x 1¾	3ga x 1¾	⅞	10	15 7/16	8⅞	2¼	806	3600
12	⅜ x 2	3ga x 2	⅞	11 9/16	18	10 7/16	2 13/16	1100	3800
14	½ x 2	¼ x 2	1	12 9/16	19 9/16	10 9/16	2 9/16	1480	4200
16	½ x 2½	¼ x 2½	1	13 15/16	21 15/16	11 15/16	2 13/16	2100	4600
18	½ x 2½	¼ x 2½	1	16	25	13⅞	3¾	2440	4800
20	⅝ x 3	⅜ x 3	1¼	17½	27½	15⅛	3¾	4700	4800
24	⅝ x 3	⅜ x 3	1¼	19¾	31¾	17⅜	4	5400	4800
30	¾ x 3	⅜ x 3	1¼	24⅛	39⅛	21½	4¾	6950	6000

NOTE: CLEVIS HANGERS FOR 20" PIPE AND LARGER ARE FURNISHED WITH PIPE SPACER ON CROSS BOLTS

FIG. 205 FLAT TOP CLEVIS HANGER

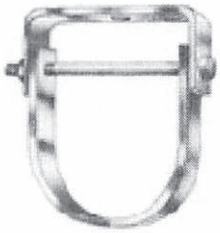

MATERIAL: Carbon steel.
FINISH: Black, electro or hot-dipped galvanized.
SERVICE: General piping, where space does not permit installation of standard figure 200 clevis hanger.
ORDERING: Specify pipe size, figure number and finish.

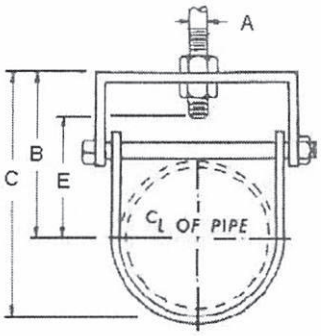

PIPE SIZE	SIZE OF STEEL		A	B	C	E	MAX. REC. LOAD, LBS.	WGT. PER 100
	UPPER YOKE	LOWER STRAP						
2	8ga x 1	12ga x ⅞	⅜	2½	3 11/16	2 1/16	300	46
2½	8ga x 1¼	10ga x 1 3/16	½	2⅞	4 3/16	2 5/16	500	78
3	8ga x 1¼	10ga x 1 3/16	½	3⅝	5⅜	3 1/16	500	98
3½	8ga x 1¼	10ga x 1 3/16	½	4 1/16	6 1/16	3 7/16	500	136
4	4ga x 1¼	10ga x 1 3/16	⅝	4 1/16	6 5/16	3 5/16	700	138
5	4ga x 1¼	8ga x 1¼	⅝	4⅞	7⅝	4⅛	700	208
6	3ga x 1½	8ga x 1½	¾	5½	8⅞	4⅝	900	282
8	3ga x 1¾	8ga x 1¾	⅞	6⅜	10⅞	5½	1000	434

OBAR SYSTEMS 2969 RT 23 SOUTH NEWFOUNDLAND NJ 07435

FLOOR PORT

Components

1. A hard plastic inner core that measures 1.5" in length with a .50 inch bore, a .75 inch outside diameter and 4 lugs that extend to .84 inches.
2. A plastic sleeve that has a.75 inch inside diameter and a .80 inch outside diameter
3. A 1/4 -20 x 1/2 rubber insulated brass rivet nut
4. A stainless steel 1/4-20 x1" bolt

Port assembly

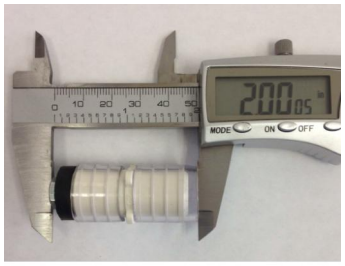

Port assembly

Rubber insulated nut

Rubber insulated nut

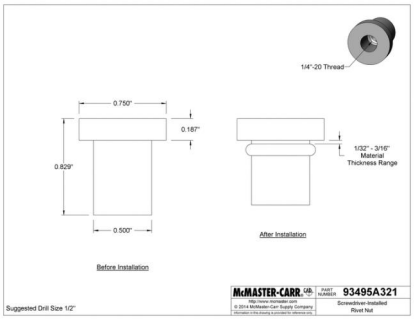

Installation

Warning: Installation requires the use of concrete drilling equipment. The installer must be familiar with and follow all safety procedures required for the use of such equipment including but not limited to the use of hearing and eye protection.

1. Select the area to drill the hole for the port. The contractor should make every effort to determine the the selected area is free of any utilities or pipes in or under the selected point. In addition the use of a drill interrupter such as the Protek11 is highly recommended .

2. Drill a 20MM (.79") hole through the concrete and clean all dust and debris from both in and around the hole with a commercial vacuum equipped with a HEPA filter.

3. Insert the port assembly into the clean hole and using a dead blow hammer and the driver tool drive the assembly into floor to a point where the top of the bolt is flush with the surface of the floor. The port is now ready to use.

Protek 11 Drill Interrupter

Vapor Intrusion Mitigation System

Post Mitigation Report

Site Address:

84 Brennan Road, Ottsville, Pennsylvania

Prepared for:

Mr. Kevin Kilmartin PG, CPG

Senior Geologist

Tetra Tech Inc.

234 Mall Boulevard, Suite 260

King of Prussia, PA 19406

Prepared by:

Mr. Daniel Nuzzetti

Project Engineer / Vapor Intrusion Specialist

OBAR Systems, Inc.

2969 Route 23

Newfoundland, NJ 07435

December 20, 2018

Table of Contents

1. Background 3
2. General System Information 3
3. Commissioning Data 3
4. Alarm Panel 3
5. Operations and Maintenance 3
6. Conclusion 4

Attachments

Attachment 1 – As Built Drawing

1. Background

OBAR Systems was retained to install a Vapor Intrusion Mitigation System in accordance with the OBAR Systems July 28, 2018 Diagnostic Report and System Design. The subject property is located at 84 Brennan Road in Ottsville, Pennsylvania.

2. General System Information

One sub slab depressurization system was installed as shown in the as built drawing. A single suction point system paired with an externally mounted mitigation fan services the main basement area. One sump pit in the basement and one in the crawlspace were sealed and dranjers were installed. Additionally, the perimeter joint in the crawl space was partially sealed.

3. Commissioning Data

The following tables display the system's commissioning values. Commissioning was performed on December 10, 2018.

System #	Fan Type	Vacuum ("w.c.)	Gauge Reading ("w.c.)
System #1	Fantech HP220	-1.1	-1.1

Suction Point #	Vacuum ("w.c.)
SP1-1	-1.1

Test Port #	Vacuum ("w.c.)
TP-1	-0.1404
TP-2	-0.1673
TP-3	-0.1734

4. Alarm Panel

The system is equipped with an alarm and vacuum gauge. The alarm is located adjacent to electric panel in the basement. A red light will illuminate, a buzzer will sound, and the vacuum gauge on the suction pipe will read 0 in the event of a system failure.

5. Operations and Maintenance

Vapor Intrusion Mitigation Systems should be checked semi-annually for the first year and annually thereafter. The following metrics shall be inspected and recorded.

- Visual Inspection
- Measure Applied Vacuum
- Record Sub Slab Vacuum at Test Ports
- Record Riser Vacuum

6. Conclusion

The Vapor Intrusion Mitigation System is meeting the defining criteria for a successful mitigation system, all sub slab pressure differentials in the area of concern are above the original design target of -0.004"w.c. The system should be routinely inspected in accordance with the O&M section of this report, in order to ensure compliance.

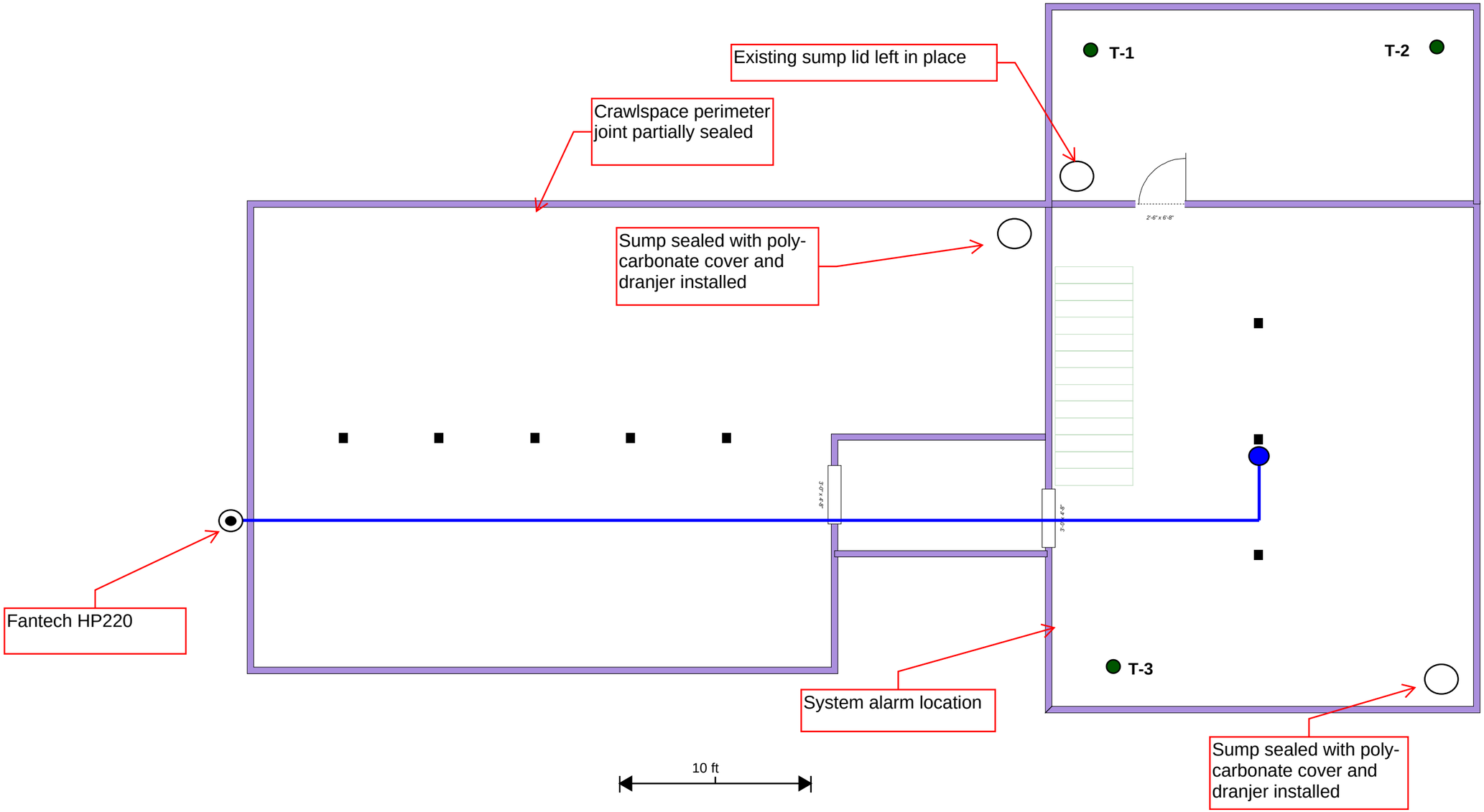

OBAR Systems Inc. 2969 Rt. 23 South Newfoundland, NJ 07435 OBAR SYSTEMS, INC.	LEGEND: 3" Suction Point Overhead Pipe Mitigation Fan Test Ports	Mitigation Specialist Gunnar Barr NJDEP MIS 10056	Drawn By: DN Checked By: GB	SITE ADDRESS: 84 Brennan Rd, Ottsville, PA SHEET NAME: Vapor Intrusion Mitigation System As Built	DATE: 12/20/2018

fantech®
a systemair company

HP 220 INLINE RADON FAN

Item no. 411349

Document type: **Product card**
Document date: **2018-02-22**
Generated by: **Systemair Online Catalogue**

Description

- UV resistant, UL Listed durable plastic
- UL Listed for use in commercial applications
- Watertight electrical terminal box
- Totally enclosed for protection
- Automatic reset thermal overload protection

The HP220 model is an excellent choice for systems with elevated radon levels, poor communication, multiple suction points and large subslab footprint.

Testing for radon

Almost every home in the US has some radon. But the levels vary from one house to another, even if they are next door to each other. The only way to know if you have a radon problem is to test your home. Purchase a radon test kit **here**.

NOTE:

Installations that will result in condensate forming in the outlet ducting should have a condensate bypass installed to route the condensate outside of the fan housing. Conditions that are likely to produce condensate include but are not limited to: outdoor installations in cold climates, long lengths of outlet ducting, high moisture content in soil and thin wall or aluminum outlet ducting. Failure to install a proper condensate bypass may void any warranty claims.

Technical parameters

Nominal data		
Voltage	120	V
Frequency	60	Hz
Phase	1	~
Input power (P1)	141	W
Current	1.2	A
Max. airflow	377	cfm
Fan impeller speed	2782	r.p.m.
Weight	8	lbs.

Temperature data		
Max. temperature of transported air	140	°F

Protection / Classification		
Insulation class	B	
Enclosure class, motor	IP44	

Others		
Certificate	HVI, cULus	

Performance

Diagrams

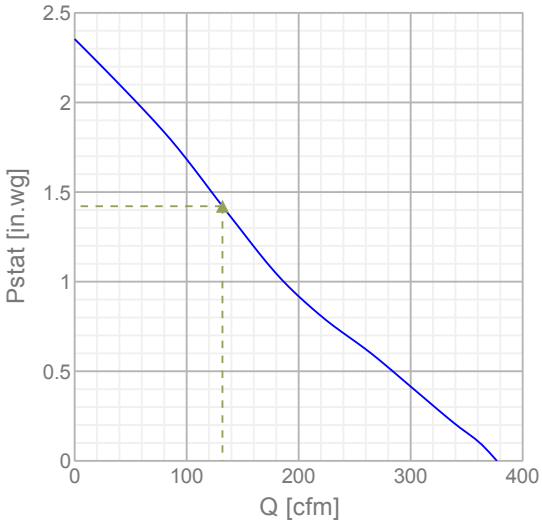

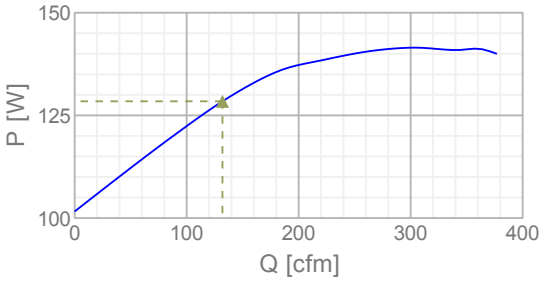

Max efficiency

Hydraulic data		
Working air flow	132	cfm
Working static pressure	1.42	in.wg
Power	128	W
Speed	2948	r.p.m.
Current	1.09	A
SFP	0.973	W/(cfm)
Voltage	120	V

Dimensions

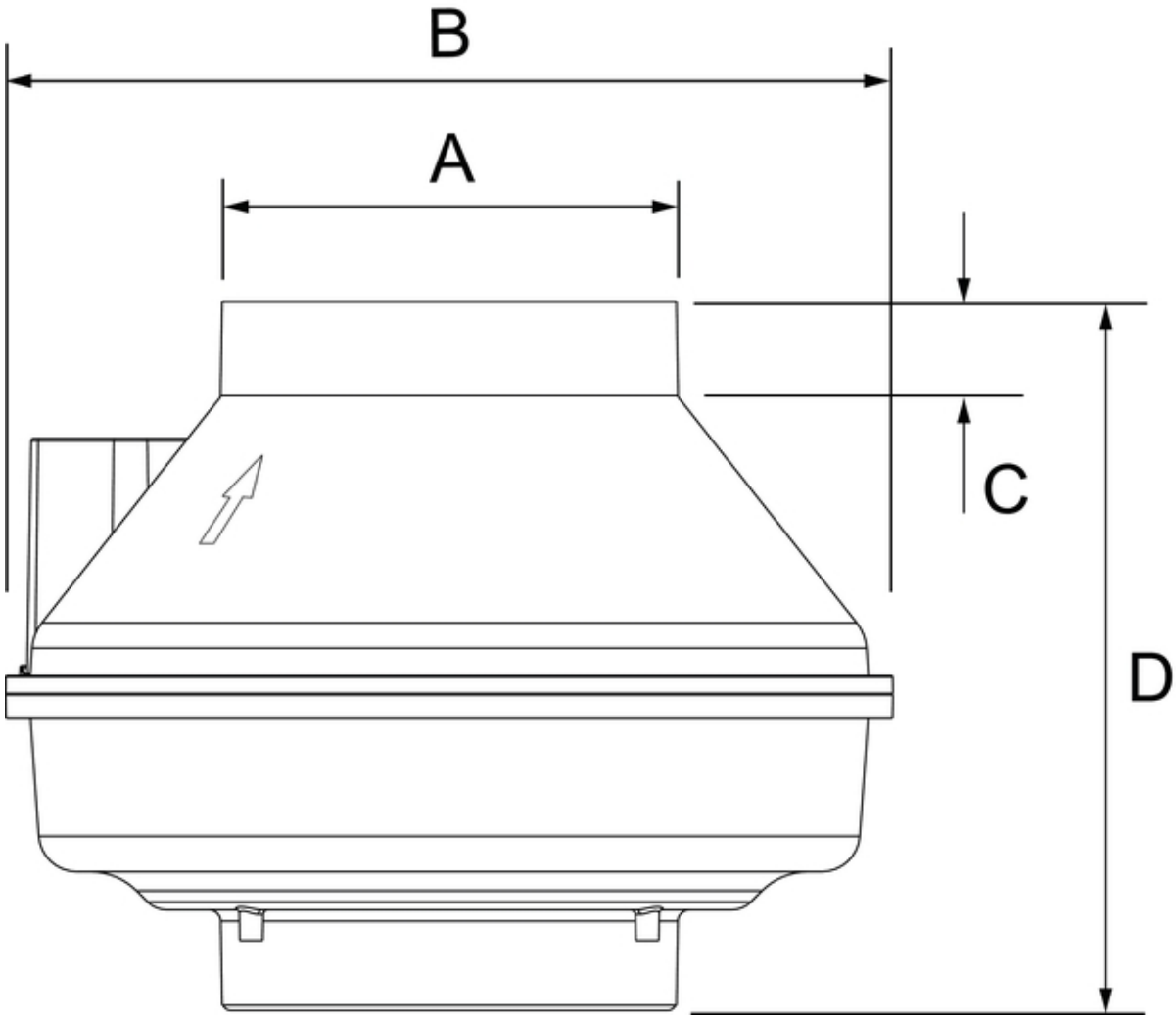

Model	A	B	C	D
HP 220	5 7/8 (149)	11 1/2 (295)	1 1/4 (32)	9 1/4 (234)
HP 2133	4 15/32 (113.5)	10 (256)	1 1/4 (32)	9 1/4 (231)
HP 2190	4 15/32 (113.5)	10 (256)	1 1/4 (32)	9 1/4 (231)

Dimensions are in inches (mm)

Wiring

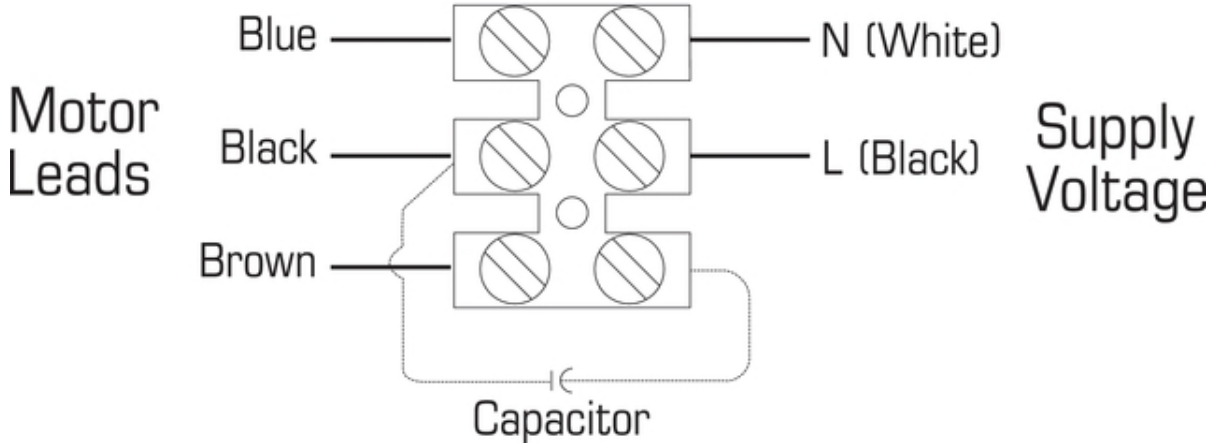

Accessories

Accessories

FRIK 220-4 Radon Install Kit (44964)

Documentation

484840 HP-FR OIPM EN.pdf (175,10kB)

E1592 Ventilation Solutions Radon.pdf (3,66MB)

HP Submittal Sheet EN.pdf (141,77kB)

APPENDIX D

PASSIVE SOIL GAS INVESTIGATION – 2015

Tetra Tech
234 Mall Blvd., Suite 260
King of Prussia, PA 19406
Attn: Mr. Kevin Kilmartin

Passive Soil Gas Survey – Analytical Report
Date: June 18, 2015

Beacon Project No. 2962 Rev1

Project Reference:	Nockamixon Township TCE Site, Bucks County, PA
Samplers Installed:	May 7 and 8, 2015
Samplers Retrieved:	May 27 and 28, 2015
Samples Received:	May 29, 2015
Analyses Completed:	June 3, 2015
Laboratory Data Issued:	June 5, 2015

EPA Method 8260C
All samples were successfully analyzed using thermal desorption-gas chromatography/mass spectrometry (TD-GC/MS) instrumentation to target a custom compound list following EPA Method 8260C. Laboratory results are reported in nanograms (ng) of specific compound per sample.

Laboratory QA/QC procedures included internal standards, surrogates, and blanks based on EPA Method 8260C. Analyses and reporting were in accordance with BEACON's Quality Assurance Project Plan.

Reporting limits
The reporting limit (RL) is 10 nanograms (ng) for vinyl chloride, 1,1-dichloroethene, trans-1,2-dichloroethene, cis-1,2-dichloroethene, trichloroethene, and tetrachloroethene; 25 ng for the remaining individual compounds; and 5,000 ng for Total Petroleum Hydrocarbons (TPH). **Table 1** provides survey results in nanograms per sampler by sample-point number and compound name. For the six (6) compounds listed above, measurements below the limit of quantitation (10 ng) but above the limit of detection (5 ng) are flagged with a "J." The RLs represent a baseline above which results exceed laboratory-determined limits of precision and accuracy. Any field sample measurements above the upper calibration standard are estimated; however, these values are reported without qualifiers because all reported measurements are relative to each other and are appropriate to meet the survey objectives of locating source areas and vapor intrusion pathways and defining the lateral extent of contamination.

Calibration Verification
The continuing calibration verification (CCV) values for the calibration check compounds were all within ±20% of the true values as defined by the initial five-point calibration and met the requirements specified in Beacon Environmental's Quality Assurance Project Plan.

Method Blanks/Trip Blanks
Laboratory method blanks are run with each sample batch to identify contamination present in the laboratory. If contamination is detected on a method blank, measurements of identical compounds in that sample batch are flagged in the laboratory report. The laboratory method blanks analyzed in connection with the present samples revealed no contamination.

The trip blank is a sampler prepared, transported, and analyzed with other samples but intentionally not exposed. Any target compounds identified on the trip blanks are reported in the laboratory data. The analyses of the trip blanks (labeled Trip-1, Trip-2, and Trip-3 in **Table 1**) reported none of the targeted compounds.

Passive Soil-Gas Survey Notes

When sample locations are covered with or near the edge of an artificial surface (*e.g.*, asphalt or concrete), the concentrations of compounds in soil gas are often significantly higher than the concentrations would be if the surfacing were not present. Thus, a reading taken below or near an impermeable surface is much higher than it would be in the absence of such a cap. Therefore, the sample location conditions should be evaluated when comparing results between locations.

Survey findings are exclusive to this project and when the spatial relationships are compared with results of other BEACON Surveys it is necessary to incorporate survey and site information from both investigations (*e.g.*, depth to sources, soil types, porosity, soil moisture, presence of impervious surfacing, sample collection times). BEACON recommends the guidelines stated in **Attachment 1** to establish a relationship between reported soil-gas measurements and actual subsurface contaminant concentrations, which will indicate those measurements representing significant subsurface contamination.

BEACON's passive soil-gas samplers are prepared with two sets of adsorbent cartridges for subsequent duplicate or confirmatory sample analysis. At Tetra Tech's request, duplicate analysis was performed for four (4) field samples. The field sample duplicates were designated "Dup" following the sample number. When comparing quantitative results, a duplicate correspondence should be considered when the relative percent difference (RPD) between the two samples is less than or equal to 100%. For the purpose of calculating correspondences, all non-detections should be assigned, as a baseline value, the RL for the specific contaminant. Based on these assumptions, a 100% correlation was found between the field sample duplicates and their base samples.

Project Details

Samplers were deployed on May 7 and 8, 2015, and were retrieved on May 27 and 28, 2015. **Attachment 2** describes standard field procedures. Individual deployment and retrieval times will be found in the Chain of Custody Form (**Attachment 3**).

One hundred (100) field samples, four (4) field sample duplicates, and three (3) trip blanks were received by BEACON on May 29, 2015. Adsorbent cartridges from the passive samplers were thermally desorbed, then analyzed using gas chromatography/mass spectrometry (GC/MS) equipment, in accordance with EPA Method 8260C, as described in **Attachment 4**. BEACON's laboratory analyzed each sample for the targeted compounds; analyses were completed on June 3, 2015. Following a laboratory review, results were provided to Tetra Tech on June 5, 2015.

Sample locations are shown on **Figure 1**. The following table lists frequency of detections based on the number of field samples analyzed, the reporting limit, and the maximum value for each mapped compound. The table also includes the transformation and interpolation method for the compound distribution maps provided.

Figure No.	Compound	Frequency	Reporting Limit (nanograms)	Max Value (nanograms)	Transformation Method	Interpolation Method
2	1,1-Dichloroethene	45	10	5,965	Log	Kriging
3	Cis-1,2-Dichloroethene	42	10	24,175	Log	Kriging
4	1,1,1-Trichloroethane	46	25	52,493	Log	Kriging
5	Trichloroethene	67	10	89,694	Log	Kriging
6	Tetrachloroethene	91	10	60,202	Log	Kriging

Attachments:

-1- Applying Results From Passive Soil-Gas Surveys
-2- Field Procedures
-3- Chain-of-Custody Form
-4- Laboratory Procedures

ALL DATA MEET REQUIREMENTS AS SPECIFIED IN THE BEACON ENVIRONMENTAL SERVICES, INC. QUALITY ASSURANCE PROJECT PLAN AND THE RESULTS RELATE ONLY TO THE SAMPLES REPORTED. BEACON ENVIRONMENTAL SERVICES IS ACCREDITED TO ISO/IEC 17025:2005, AND THE WORK PERFORMED WAS IN ACCORDANCE WITH ISO/IEC 17025:2005 REQUIREMENTS, WITH THE EXCEPTION THAT SAMPLES WERE ANALYZED WITHIN A 24-HOUR TUNE WINDOW AND FREON 113, 2-METHYLNAPHTHALENE AND TPH C_5-C_9 AND TPH C_{10}-C_{15} ARE NOT INCLUDED IN BEACON'S SCOPE OF ACCREDITION. THIS REPORT SHALL NOT BE REPRODUCED EXCEPT IN FULL, WITHOUT THE WRITTEN APPROVAL OF THE LABORATORY. RELEASE OF THE DATA CONTAINED IN THIS HARDCOPY DATA PACKAGE HAS BEEN AUTHORIZED BY THE LABORATORY DIRECTOR OR HIS SIGNEE, AS VERIFIED BY THE FOLLOWING SIGNATURES:

Steven C. Thornley
Laboratory Director

Patti J. Riggs
Quality Manager

Table 1

Beacon Environmental Services, Inc.
2203A Commerce Road, Suite 1
Forest Hill, MD 21050 USA

Analysis by EPA Method 8260C

Client Sample ID:	Trip-1	Trip-2	Trip-3	A-50	A-150	A-350
Project Number:	2962	2962	2962	2962	2962	2962
Lab File ID:	C15060119	C15060120	C15060121	C15060122	C15060123	C15060124
Received Date:	5/29/2015	5/29/2015	5/29/2015	5/29/2015	5/29/2015	5/29/2015
Analysis Date:	6/2/2015	6/2/2015	6/2/2015	6/2/2015	6/2/2015	6/2/2015
Analysis Time:	9:13	9:35	9:57	10:19	10:41	11:03
Matrix:				Soil Gas	Soil Gas	Soil Gas
Units:	ng	ng	ng	ng	ng	ng
COMPOUNDS						
Vinyl Chloride	<10	<10	<10	**400**	**178**	<10
Trichlorofluoromethane (Freon 11)	<25	<25	<25	<25	<25	<25
1,1-Dichloroethene	<10	<10	<10	**5,965**	**1,184**	**10**
1,1,2-Trichlorotrifluoroethane (Fr.113)	<25	<25	<25	<25	<25	<25
trans-1,2-Dichloroethene	<10	<10	<10	**595**	**445**	<10
Methyl-t-butyl ether	<25	<25	<25	<25	<25	<25
1,1-Dichloroethane	<25	<25	<25	**546**	**1,466**	<25
cis-1,2-Dichloroethene	<10	<10	<10	**3,278**	**3,827**	**8 J**
Chloroform	<25	<25	<25	<25	<25	<25
1,2-Dichloroethane	<25	<25	<25	<25	<25	<25
1,1,1-Trichloroethane	<25	<25	<25	**37,213**	**11,310**	**204**
Carbon Tetrachloride	<25	<25	<25	**50**	<25	<25
Benzene	<25	<25	<25	<25	<25	<25
Trichloroethene	<10	<10	<10	**29,679**	**4,444**	**57**
1,4-Dioxane	<25	<25	<25	<25	<25	<25
1,1,2-Trichloroethane	<25	<25	<25	<25	<25	<25
Toluene	<25	<25	<25	<25	<25	<25
1,2-Dibromoethane (EDB)	<25	<25	<25	<25	<25	<25
Tetrachloroethene	<10	<10	<10	**25,844**	**599**	**144**
1,1,1,2-Tetrachloroethane	<25	<25	<25	<25	<25	<25
Chlorobenzene	<25	<25	<25	<25	<25	<25
Ethylbenzene	<25	<25	<25	<25	<25	<25
p & m-Xylene	<25	<25	<25	<25	<25	<25
1,1,2,2-Tetrachloroethane	<25	<25	<25	<25	<25	<25
o-Xylene	<25	<25	<25	<25	<25	<25
1,2,3-Trichloropropane	<25	<25	<25	<25	<25	<25
Isopropylbenzene	<25	<25	<25	<25	<25	<25
1,3,5-Trimethylbenzene	<25	<25	<25	<25	<25	<25
1,2,4-Trimethylbenzene	<25	<25	<25	<25	<25	<25
1,3-Dichlorobenzene	<25	<25	<25	<25	<25	<25
1,4-Dichlorobenzene	<25	<25	<25	<25	<25	<25
1,2-Dichlorobenzene	<25	<25	<25	<25	<25	<25
1,2,4-Trichlorobenzene	<25	<25	<25	<25	<25	<25
Naphthalene	<25	<25	<25	<25	<25	<25
1,2,3-Trichlorobenzene	<25	<25	<25	<25	<25	<25
2-Methylnaphthalene	<25	<25	<25	<25	<25	<25
TPH C_4-C_9	<5,000	<5,000	<5,000	<5,000	<5,000	<5,000
TPH C_{10}-C_{15}	<5,000	<5,000	<5,000	<5,000	<5,000	<5,000

Results in nanograms (ng). J = Values below limit of quantitation (LOQ) but above limit of detection (LOD). B = Detected in method blank.

Table 1

Beacon Environmental Services, Inc.
2203A Commerce Road, Suite 1
Forest Hill, MD 21050 USA

Analysis by EPA Method 8260C

Client Sample ID:	A-450	A-550	A-650	A-700	A-850	B-0
Project Number:	2962	2962	2962	2962	2962	2962
Lab File ID:	C15060125	C15060126	C15060127	C15060128	C15060129	C15060205
Received Date:	5/29/2015	5/29/2015	5/29/2015	5/29/2015	5/29/2015	5/29/2015
Analysis Date:	6/2/2015	6/2/2015	6/2/2015	6/2/2015	6/2/2015	6/2/2015
Analysis Time:	11:25	11:47	12:09	12:31	12:53	14:53
Matrix:	Soil Gas	Soil Gas	Soil Gas	Soil Gas	Soil Gas	Soil Gas
Units:	ng	ng	ng	ng	ng	ng
COMPOUNDS						
Vinyl Chloride	<10	<10	<10	<10	<10	<10
Trichlorofluoromethane (Freon 11)	<25	<25	<25	<25	<25	<25
1,1-Dichloroethene	<10	**5 J**	<10	<10	<10	<10
1,1,2-Trichlorotrifluoroethane (Fr.113)	**26**	<25	<25	<25	<25	**27**
trans-1,2-Dichloroethene	<10	<10	<10	<10	<10	<10
Methyl-t-butyl ether	<25	<25	<25	<25	<25	<25
1,1-Dichloroethane	<25	<25	<25	<25	<25	<25
cis-1,2-Dichloroethene	<10	<10	<10	<10	<10	**18**
Chloroform	<25	<25	<25	<25	<25	<25
1,2-Dichloroethane	<25	<25	<25	<25	<25	<25
1,1,1-Trichloroethane	**48**	**45**	<25	<25	<25	**64**
Carbon Tetrachloride	<25	<25	<25	<25	<25	<25
Benzene	<25	<25	<25	<25	<25	<25
Trichloroethene	**44**	**31**	**13**	**11**	**7 J**	**334**
1,4-Dioxane	<25	<25	<25	<25	<25	<25
1,1,2-Trichloroethane	<25	<25	<25	<25	<25	<25
Toluene	<25	<25	<25	<25	<25	<25
1,2-Dibromoethane (EDB)	<25	<25	<25	<25	<25	<25
Tetrachloroethene	**38**	**65**	**14**	**13**	**64**	**550**
1,1,1,2-Tetrachloroethane	<25	<25	<25	<25	<25	<25
Chlorobenzene	<25	<25	<25	<25	<25	<25
Ethylbenzene	<25	<25	<25	<25	<25	<25
p & m-Xylene	<25	<25	<25	<25	<25	<25
1,1,2,2-Tetrachloroethane	<25	<25	<25	<25	<25	<25
o-Xylene	<25	<25	<25	<25	<25	<25
1,2,3-Trichloropropane	<25	<25	<25	<25	<25	<25
Isopropylbenzene	<25	<25	<25	<25	<25	<25
1,3,5-Trimethylbenzene	<25	<25	<25	<25	<25	<25
1,2,4-Trimethylbenzene	<25	<25	<25	<25	<25	<25
1,3-Dichlorobenzene	<25	<25	<25	<25	<25	<25
1,4-Dichlorobenzene	<25	<25	<25	<25	<25	<25
1,2-Dichlorobenzene	<25	<25	<25	<25	<25	<25
1,2,4-Trichlorobenzene	<25	<25	<25	<25	<25	<25
Naphthalene	<25	<25	<25	<25	<25	<25
1,2,3-Trichlorobenzene	<25	<25	<25	<25	<25	<25
2-Methylnaphthalene	<25	<25	<25	<25	<25	<25
TPH C_4-C_9	<5,000	<5,000	<5,000	<5,000	<5,000	<5,000
TPH C_{10}-C_{15}	<5,000	<5,000	<5,000	<5,000	<5,000	<5,000

Results in nanograms (ng). J = Values below limit of quantitation (LOQ) but above limit of detection (LOD). B = Detected in method blank.

Table 1

Beacon Environmental Services, Inc.
2203A Commerce Road, Suite 1
Forest Hill, MD 21050 USA

Analysis by EPA Method 8260C

Client Sample ID:	B-50	B-100	B-100 Dup	B-200	B-300	B-400
Project Number:	2962	2962	2962	2962	2962	2962
Lab File ID:	C15060206	C15060207	C15060208	C15060209	C15060210	C15060211
Received Date:	5/29/2015	5/29/2015	5/29/2015	5/29/2015	5/29/2015	5/29/2015
Analysis Date:	6/2/2015	6/2/2015	6/2/2015	6/2/2015	6/2/2015	6/2/2015
Analysis Time:	15:15	15:37	15:59	16:21	16:44	17:05
Matrix:	Soil Gas	Soil Gas	Soil Gas	Soil Gas	Soil Gas	Soil Gas
Units:	ng	ng	ng	ng	ng	ng
COMPOUNDS						
Vinyl Chloride	<10	**61**	**57**	<10	<10	<10
Trichlorofluoromethane (Freon 11)	<25	<25	<25	<25	**28**	<25
1,1-Dichloroethene	<10	**1,875**	**2,401**	**179**	<10	<10
1,1,2-Trichlorotrifluoroethane (Fr.113)	<25	**113**	**125**	<25	<25	<25
trans-1,2-Dichloroethene	<10	**2,053**	**2,042**	**7 J**	<10	<10
Methyl-t-butyl ether	<25	<25	<25	<25	<25	<25
1,1-Dichloroethane	<25	**496**	**613**	<25	<25	<25
cis-1,2-Dichloroethene	**6 J**	**23,080**	**26,594**	**181**	**55**	**10 J**
Chloroform	<25	<25	<25	<25	<25	<25
1,2-Dichloroethane	<25	<25	<25	<25	<25	<25
1,1,1-Trichloroethane	<25	**34,411**	**37,746**	**194**	**67**	**35**
Carbon Tetrachloride	<25	**52**	**45**	<25	<25	<25
Benzene	<25	<25	<25	<25	<25	<25
Trichloroethene	<10	**44,051**	**48,623**	**1,286**	**162**	**66**
1,4-Dioxane	<25	<25	<25	<25	<25	<25
1,1,2-Trichloroethane	<25	<25	<25	<25	<25	<25
Toluene	<25	<25	<25	<25	<25	<25
1,2-Dibromoethane (EDB)	<25	<25	<25	<25	<25	<25
Tetrachloroethene	**6 J**	**24,454**	**21,824**	**383**	**69**	**32**
1,1,1,2-Tetrachloroethane	<25	<25	<25	<25	<25	<25
Chlorobenzene	<25	<25	<25	<25	<25	<25
Ethylbenzene	<25	<25	<25	<25	<25	<25
p & m-Xylene	<25	<25	<25	<25	<25	<25
1,1,2,2-Tetrachloroethane	<25	<25	<25	<25	<25	<25
o-Xylene	<25	<25	<25	<25	<25	<25
1,2,3-Trichloropropane	<25	<25	<25	<25	<25	<25
Isopropylbenzene	<25	<25	<25	<25	<25	<25
1,3,5-Trimethylbenzene	<25	<25	<25	<25	<25	<25
1,2,4-Trimethylbenzene	<25	<25	<25	<25	<25	<25
1,3-Dichlorobenzene	<25	<25	<25	<25	<25	<25
1,4-Dichlorobenzene	<25	<25	<25	<25	<25	<25
1,2-Dichlorobenzene	<25	<25	<25	<25	<25	<25
1,2,4-Trichlorobenzene	<25	<25	<25	<25	<25	<25
Naphthalene	<25	<25	<25	<25	<25	<25
1,2,3-Trichlorobenzene	<25	<25	<25	<25	<25	<25
2-Methylnaphthalene	<25	<25	<25	<25	<25	<25
TPH C_4-C_9	<5,000	<5,000	<5,000	<5,000	<5,000	<5,000
TPH C_{10}-C_{15}	<5,000	<5,000	<5,000	<5,000	<5,000	<5,000

Results in nanograms (ng). J = Values below limit of quantitation (LOQ) but above limit of detection (LOD). B = Detected in method blank.

Table 1

Beacon Environmental Services, Inc.
2203A Commerce Road, Suite 1
Forest Hill, MD 21050 USA

Analysis by EPA Method 8260C

Client Sample ID:	B-500	B-600	B-700	B-800	B-900	B-1000
Project Number:	2962	2962	2962	2962	2962	2962
Lab File ID:	C15060212	C15060213	C15060214	C15060215	C15060216	C15060217
Received Date:	5/29/2015	5/29/2015	5/29/2015	5/29/2015	5/29/2015	5/29/2015
Analysis Date:	6/2/2015	6/2/2015	6/2/2015	6/2/2015	6/2/2015	6/2/2015
Analysis Time:	17:27	17:49	18:11	18:33	18:55	19:16
Matrix:	Soil Gas	Soil Gas	Soil Gas	Soil Gas	Soil Gas	Soil Gas
Units:	ng	ng	ng	ng	ng	ng
COMPOUNDS						
Vinyl Chloride	<10	<10	<10	<10	<10	<10
Trichlorofluoromethane (Freon 11)	<25	<25	<25	<25	<25	<25
1,1-Dichloroethene	<10	<10	<10	<10	<10	<10
1,1,2-Trichlorotrifluoroethane (Fr.113)	<25	<25	<25	<25	<25	<25
trans-1,2-Dichloroethene	<10	<10	<10	<10	<10	<10
Methyl-t-butyl ether	<25	<25	<25	<25	<25	<25
1,1-Dichloroethane	<25	<25	<25	<25	<25	<25
cis-1,2-Dichloroethene	<10	<10	<10	<10	<10	<10
Chloroform	<25	<25	<25	<25	<25	<25
1,2-Dichloroethane	<25	<25	<25	<25	<25	<25
1,1,1-Trichloroethane	<25	<25	<25	<25	<25	<25
Carbon Tetrachloride	<25	<25	<25	<25	<25	<25
Benzene	<25	<25	<25	<25	<25	<25
Trichloroethene	**22**	**22**	**62**	**10**	**10**	**6 J**
1,4-Dioxane	<25	<25	<25	<25	<25	<25
1,1,2-Trichloroethane	<25	<25	<25	<25	<25	<25
Toluene	<25	<25	<25	<25	<25	<25
1,2-Dibromoethane (EDB)	<25	<25	<25	<25	<25	<25
Tetrachloroethene	**20**	**21**	**483**	**32**	**22**	**9 J**
1,1,1,2-Tetrachloroethane	<25	<25	<25	<25	<25	<25
Chlorobenzene	<25	<25	<25	<25	<25	<25
Ethylbenzene	<25	<25	<25	<25	<25	<25
p & m-Xylene	<25	<25	<25	<25	<25	<25
1,1,2,2-Tetrachloroethane	<25	<25	<25	<25	<25	<25
o-Xylene	<25	<25	<25	<25	<25	<25
1,2,3-Trichloropropane	<25	<25	<25	<25	<25	<25
Isopropylbenzene	<25	<25	<25	<25	<25	<25
1,3,5-Trimethylbenzene	<25	<25	<25	<25	<25	<25
1,2,4-Trimethylbenzene	<25	<25	<25	<25	<25	<25
1,3-Dichlorobenzene	<25	<25	<25	<25	<25	<25
1,4-Dichlorobenzene	<25	<25	<25	<25	<25	<25
1,2-Dichlorobenzene	<25	<25	<25	<25	<25	<25
1,2,4-Trichlorobenzene	<25	<25	<25	<25	<25	<25
Naphthalene	<25	<25	<25	<25	<25	<25
1,2,3-Trichlorobenzene	<25	<25	<25	<25	<25	<25
2-Methylnaphthalene	<25	<25	<25	<25	<25	<25
TPH C_4-C_9	<5,000	<5,000	<5,000	<5,000	<5,000	<5,000
TPH C_{10}-C_{15}	<5,000	<5,000	<5,000	<5,000	<5,000	<5,000

Results in nanograms (ng). J = Values below limit of quantitation (LOQ) but above limit of detection (LOD). B = Detected in method blank.

Table 1

Beacon Environmental Services, Inc.
2203A Commerce Road, Suite 1
Forest Hill, MD 21050 USA

Analysis by EPA Method 8260C

Client Sample ID:	B-Rd-0	B-Rd-100	B-Rd-200	B-Rd-400	B-Rd-550	B-Rd-700
Project Number:	2962	2962	2962	2962	2962	2962
Lab File ID:	C15060218	C15060219	C15060220	C15060221	C15060222	C15060223
Received Date:	5/29/2015	5/29/2015	5/29/2015	5/29/2015	5/29/2015	5/29/2015
Analysis Date:	6/2/2015	6/2/2015	6/2/2015	6/2/2015	6/2/2015	6/2/2015
Analysis Time:	19:38	20:00	20:23	20:45	21:07	21:29
Matrix:	Soil Gas	Soil Gas	Soil Gas	Soil Gas	Soil Gas	Soil Gas
Units:	ng	ng	ng	ng	ng	ng
COMPOUNDS						
Vinyl Chloride	<10	<10	<10	**408**	<10	<10
Trichlorofluoromethane (Freon 11)	<25	<25	<25	<25	<25	**30**
1,1-Dichloroethene	<10	**14**	**75**	**714**	**7 J**	**9 J**
1,1,2-Trichlorotrifluoroethane (Fr.113)	<25	<25	<25	<25	<25	<25
trans-1,2-Dichloroethene	<10	<10	**15**	**346**	<10	<10
Methyl-t-butyl ether	<25	<25	<25	<25	<25	<25
1,1-Dichloroethane	<25	<25	<25	**1,399**	<25	**30**
cis-1,2-Dichloroethene	<10	<10	**40**	**2,978**	**24**	**41**
Chloroform	<25	<25	<25	<25	<25	**28**
1,2-Dichloroethane	<25	<25	<25	<25	<25	<25
1,1,1-Trichloroethane	<25	**52**	**498**	**6,089**	**96**	**195**
Carbon Tetrachloride	<25	<25	<25	<25	<25	<25
Benzene	<25	<25	<25	<25	<25	<25
Trichloroethene	**12**	**37**	**118**	**5,349**	**311**	**44**
1,4-Dioxane	<25	<25	<25	<25	<25	<25
1,1,2-Trichloroethane	<25	<25	<25	<25	<25	<25
Toluene	<25	<25	**201**	**1,726**	<25	<25
1,2-Dibromoethane (EDB)	<25	<25	<25	<25	<25	<25
Tetrachloroethene	**44**	**169**	**217**	**127**	**405**	**20**
1,1,1,2-Tetrachloroethane	<25	<25	<25	<25	<25	<25
Chlorobenzene	<25	<25	<25	<25	<25	<25
Ethylbenzene	<25	<25	<25	<25	<25	<25
p & m-Xylene	<25	<25	<25	<25	<25	<25
1,1,2,2-Tetrachloroethane	<25	<25	<25	<25	<25	<25
o-Xylene	<25	<25	<25	<25	<25	<25
1,2,3-Trichloropropane	<25	<25	<25	<25	<25	<25
Isopropylbenzene	<25	<25	<25	<25	<25	<25
1,3,5-Trimethylbenzene	<25	<25	<25	<25	<25	<25
1,2,4-Trimethylbenzene	<25	<25	<25	<25	<25	<25
1,3-Dichlorobenzene	<25	<25	<25	<25	<25	<25
1,4-Dichlorobenzene	<25	<25	<25	<25	<25	<25
1,2-Dichlorobenzene	<25	<25	<25	<25	<25	<25
1,2,4-Trichlorobenzene	<25	<25	<25	<25	<25	<25
Naphthalene	<25	<25	<25	<25	<25	<25
1,2,3-Trichlorobenzene	<25	<25	<25	<25	<25	<25
2-Methylnaphthalene	<25	<25	<25	<25	<25	<25
TPH C_4-C_9	<5,000	<5,000	<5,000	<5,000	<5,000	<5,000
TPH C_{10}-C_{15}	<5,000	<5,000	<5,000	<5,000	<5,000	<5,000

Results in nanograms (ng). J = Values below limit of quantitation (LOQ) but above limit of detection (LOD). B = Detected in method blank.

Table 1

Beacon Environmental Services, Inc.
2203A Commerce Road, Suite 1
Forest Hill, MD 21050 USA

Analysis by EPA Method 8260C

Client Sample ID:	B-Rd-800	B-Rd-850	B-Rd-900	C-0	C-50	C-100
Project Number:	2962	2962	2962	2962	2962	2962
Lab File ID:	C15060224	C15060225	C15060226	C15060227	C15060228	C15060229
Received Date:	5/29/2015	5/29/2015	5/29/2015	5/29/2015	5/29/2015	5/29/2015
Analysis Date:	6/2/2015	6/2/2015	6/2/2015	6/2/2015	6/2/2015	6/2/2015
Analysis Time:	21:51	22:12	22:34	22:56	23:18	23:40
Matrix:	Soil Gas	Soil Gas	Soil Gas	Soil Gas	Soil Gas	Soil Gas
Units:	ng	ng	ng	ng	ng	ng
COMPOUNDS						
Vinyl Chloride	<10	<10	<10	<10	**9 J**	**13**
Trichlorofluoromethane (Freon 11)	<25	<25	<25	<25	<25	<25
1,1-Dichloroethene	<10	<10	<10	**7 J**	**300**	**105**
1,1,2-Trichlorotrifluoroethane (Fr.113)	<25	<25	<25	<25	**60**	**37**
trans-1,2-Dichloroethene	<10	<10	<10	<10	**279**	**11**
Methyl-t-butyl ether	<25	<25	<25	<25	<25	<25
1,1-Dichloroethane	<25	<25	<25	**28**	<25	<25
cis-1,2-Dichloroethene	<10	<10	<10	**128**	**4,276**	**63**
Chloroform	<25	<25	<25	<25	<25	<25
1,2-Dichloroethane	<25	<25	<25	<25	<25	<25
1,1,1-Trichloroethane	<25	<25	**31**	<25	**7,904**	**1,030**
Carbon Tetrachloride	<25	<25	<25	<25	<25	<25
Benzene	<25	<25	<25	<25	<25	<25
Trichloroethene	**12**	<10	**7 J**	**655**	**89,694**	**3,632**
1,4-Dioxane	<25	<25	<25	<25	<25	<25
1,1,2-Trichloroethane	<25	<25	<25	<25	<25	<25
Toluene	<25	<25	<25	<25	<25	<25
1,2-Dibromoethane (EDB)	<25	<25	<25	<25	<25	<25
Tetrachloroethene	**8 J**	**13**	**46**	**153**	**54,416**	**1,547**
1,1,1,2-Tetrachloroethane	<25	<25	<25	<25	<25	<25
Chlorobenzene	<25	<25	<25	<25	<25	<25
Ethylbenzene	<25	<25	<25	<25	<25	<25
p & m-Xylene	<25	<25	<25	<25	<25	<25
1,1,2,2-Tetrachloroethane	<25	<25	<25	<25	<25	<25
o-Xylene	<25	<25	<25	<25	<25	<25
1,2,3-Trichloropropane	<25	<25	<25	<25	<25	<25
Isopropylbenzene	<25	<25	<25	<25	<25	<25
1,3,5-Trimethylbenzene	<25	<25	<25	<25	<25	<25
1,2,4-Trimethylbenzene	<25	<25	<25	<25	<25	<25
1,3-Dichlorobenzene	<25	<25	<25	<25	<25	<25
1,4-Dichlorobenzene	<25	<25	<25	<25	<25	<25
1,2-Dichlorobenzene	<25	<25	<25	<25	<25	<25
1,2,4-Trichlorobenzene	<25	<25	<25	<25	<25	<25
Naphthalene	<25	<25	<25	<25	<25	<25
1,2,3-Trichlorobenzene	<25	<25	<25	<25	<25	<25
2-Methylnaphthalene	<25	<25	<25	<25	<25	<25
TPH C_4-C_9	<5,000	<5,000	<5,000	<5,000	<5,000	<5,000
TPH C_{10}-C_{15}	<5,000	<5,000	<5,000	<5,000	<5,000	<5,000

Results in nanograms (ng). J = Values below limit of quantitation (LOQ) but above limit of detection (LOD). B = Detected in method blank.

Table 1

Beacon Environmental Services, Inc.
2203A Commerce Road, Suite 1
Forest Hill, MD 21050 USA

Analysis by EPA Method 8260C

Client Sample ID:	C-150	C-250	C-350	C-450	C-550	C-650
Project Number:	2962	2962	2962	2962	2962	2962
Lab File ID:	C15060230	C15060231	C15060232	C15060233	C15060234	C15060235
Received Date:	5/29/2015	5/29/2015	5/29/2015	5/29/2015	5/29/2015	5/29/2015
Analysis Date:	6/3/2015	6/3/2015	6/3/2015	6/3/2015	6/3/2015	6/3/2015
Analysis Time:	0:02	0:24	0:46	1:08	1:30	1:52
Matrix:	Soil Gas	Soil Gas	Soil Gas	Soil Gas	Soil Gas	Soil Gas
Units:	ng	ng	ng	ng	ng	ng
COMPOUNDS						
Vinyl Chloride	<10	<10	<10	<10	<10	<10
Trichlorofluoromethane (Freon 11)	<25	**25**	<25	<25	<25	<25
1,1-Dichloroethene	**10 J**	**13**	<10	<10	<10	**26**
1,1,2-Trichlorotrifluoroethane (Fr.113)	<25	<25	<25	<25	<25	<25
trans-1,2-Dichloroethene	<10	<10	<10	<10	<10	<10
Methyl-t-butyl ether	<25	<25	<25	<25	<25	<25
1,1-Dichloroethane	<25	<25	<25	<25	<25	<25
cis-1,2-Dichloroethene	**7 J**	<10	<10	<10	<10	**70**
Chloroform	<25	<25	<25	<25	<25	<25
1,2-Dichloroethane	<25	<25	<25	<25	<25	<25
1,1,1-Trichloroethane	**62**	**39**	<25	<25	<25	**125**
Carbon Tetrachloride	<25	<25	<25	<25	<25	<25
Benzene	<25	<25	<25	<25	<25	<25
Trichloroethene	**326**	**88**	**32**	**23**	**16**	**519**
1,4-Dioxane	<25	<25	<25	<25	<25	<25
1,1,2-Trichloroethane	<25	<25	<25	<25	<25	<25
Toluene	<25	<25	<25	<25	<25	<25
1,2-Dibromoethane (EDB)	<25	<25	<25	<25	<25	<25
Tetrachloroethene	**303**	**127**	**42**	**32**	**23**	**74**
1,1,1,2-Tetrachloroethane	<25	<25	<25	<25	<25	<25
Chlorobenzene	<25	<25	<25	<25	<25	<25
Ethylbenzene	<25	<25	<25	<25	<25	<25
p & m-Xylene	<25	<25	<25	<25	<25	<25
1,1,2,2-Tetrachloroethane	<25	<25	<25	<25	<25	<25
o-Xylene	<25	<25	<25	<25	<25	<25
1,2,3-Trichloropropane	<25	<25	<25	<25	<25	<25
Isopropylbenzene	<25	<25	<25	<25	<25	<25
1,3,5-Trimethylbenzene	<25	<25	<25	<25	<25	<25
1,2,4-Trimethylbenzene	<25	<25	<25	<25	<25	<25
1,3-Dichlorobenzene	<25	<25	<25	<25	<25	<25
1,4-Dichlorobenzene	<25	<25	<25	<25	<25	<25
1,2-Dichlorobenzene	<25	<25	<25	<25	<25	<25
1,2,4-Trichlorobenzene	<25	<25	<25	<25	<25	<25
Naphthalene	<25	<25	<25	<25	<25	<25
1,2,3-Trichlorobenzene	<25	<25	<25	<25	<25	<25
2-Methylnaphthalene	<25	<25	<25	<25	<25	<25
TPH C_4-C_9	<5,000	<5,000	<5,000	<5,000	<5,000	<5,000
TPH C_{10}-C_{15}	<5,000	<5,000	<5,000	<5,000	<5,000	<5,000

Results in nanograms (ng). J = Values below limit of quantitation (LOQ) but above limit of detection (LOD). B = Detected in method blank.

Table 1

Beacon Environmental Services, Inc.
2203A Commerce Road, Suite 1
Forest Hill, MD 21050 USA

Analysis by EPA Method 8260C

Client Sample ID:	C-700	C-750	C-900	C-900 Dup	C-950	D-0
Project Number:	2962	2962	2962	2962	2962	2962
Lab File ID:	C15060236	C15060237	A15060105	A15060106	A15060107	A15060108
Received Date:	5/29/2015	5/29/2015	5/29/2015	5/29/2015	5/29/2015	5/29/2015
Analysis Date:	6/3/2015	6/3/2015	6/1/2015	6/1/2015	6/1/2015	6/1/2015
Analysis Time:	2:17	2:39	13:41	14:12	14:41	15:17
Matrix:	Soil Gas	Soil Gas	Soil Gas	Soil Gas	Soil Gas	Soil Gas
Units:	ng	ng	ng	ng	ng	ng
COMPOUNDS						
Vinyl Chloride	<10	<10	<10	<10	<10	**12**
Trichlorofluoromethane (Freon 11)	<25	<25	<25	<25	<25	<25
1,1-Dichloroethene	<10	<10	<10	<10	<10	**287**
1,1,2-Trichlorotrifluoroethane (Fr.113)	<25	<25	<25	<25	<25	<25
trans-1,2-Dichloroethene	<10	<10	<10	<10	<10	**194**
Methyl-t-butyl ether	<25	<25	<25	<25	<25	<25
1,1-Dichloroethane	<25	<25	<25	<25	<25	**75**
cis-1,2-Dichloroethene	<10	<10	<10	<10	<10	**8,569**
Chloroform	<25	<25	<25	<25	<25	<25
1,2-Dichloroethane	<25	<25	<25	<25	<25	<25
1,1,1-Trichloroethane	<25	<25	<25	<25	<25	**6,723**
Carbon Tetrachloride	<25	<25	<25	<25	<25	<25
Benzene	<25	<25	<25	<25	<25	<25
Trichloroethene	**13**	**32**	<10	<10	<10	**19,566**
1,4-Dioxane	<25	<25	<25	<25	<25	<25
1,1,2-Trichloroethane	<25	<25	<25	<25	<25	<25
Toluene	<25	<25	<25	<25	<25	<25
1,2-Dibromoethane (EDB)	<25	<25	<25	<25	<25	<25
Tetrachloroethene	**24**	**86**	<10	<10	<10	**60,202**
1,1,1,2-Tetrachloroethane	<25	<25	<25	<25	<25	<25
Chlorobenzene	<25	<25	<25	<25	<25	<25
Ethylbenzene	<25	<25	<25	<25	<25	<25
p & m-Xylene	<25	<25	<25	<25	<25	<25
1,1,2,2-Tetrachloroethane	<25	<25	<25	<25	<25	<25
o-Xylene	<25	<25	<25	<25	<25	<25
1,2,3-Trichloropropane	<25	<25	<25	<25	<25	<25
Isopropylbenzene	<25	<25	<25	<25	<25	<25
1,3,5-Trimethylbenzene	<25	<25	<25	<25	<25	<25
1,2,4-Trimethylbenzene	<25	<25	<25	<25	<25	<25
1,3-Dichlorobenzene	<25	<25	<25	<25	<25	<25
1,4-Dichlorobenzene	<25	<25	<25	<25	<25	<25
1,2-Dichlorobenzene	<25	<25	<25	<25	<25	**63**
1,2,4-Trichlorobenzene	<25	<25	<25	<25	<25	<25
Naphthalene	<25	<25	<25	<25	<25	<25
1,2,3-Trichlorobenzene	<25	<25	<25	<25	<25	<25
2-Methylnaphthalene	<25	<25	<25	<25	<25	<25
TPH C_4-C_9	<5,000	<5,000	<5,000	<5,000	<5,000	<5,000
TPH C_{10}-C_{15}	<5,000	<5,000	<5,000	<5,000	<5,000	<5,000

Results in nanograms (ng). J = Values below limit of quantitation (LOQ) but above limit of detection (LOD). B = Detected in method blank.

Table 1

Beacon Environmental Services, Inc.
2203A Commerce Road, Suite 1
Forest Hill, MD 21050 USA

Analysis by EPA Method 8260C

Client Sample ID:	D-100	D-200	D-300	D-350	D-450	D-500
Project Number:	2962	2962	2962	2962	2962	2962
Lab File ID:	A15060109	A15060110	A15060111	A15060112	A15060113	A15060114
Received Date:	5/29/2015	5/29/2015	5/29/2015	5/29/2015	5/29/2015	5/29/2015
Analysis Date:	6/1/2015	6/1/2015	6/1/2015	6/1/2015	6/1/2015	6/1/2015
Analysis Time:	15:45	16:16	16:48	17:20	17:53	18:21
Matrix:	Soil Gas	Soil Gas	Soil Gas	Soil Gas	Soil Gas	Soil Gas
Units:	ng	ng	ng	ng	ng	ng
COMPOUNDS						
Vinyl Chloride	**14**	<10	<10	<10	<10	<10
Trichlorofluoromethane (Freon 11)	<25	<25	<25	<25	<25	<25
1,1-Dichloroethene	**578**	**44**	**8 J**	<10	<10	<10
1,1,2-Trichlorotrifluoroethane (Fr.113)	**26**	<25	<25	<25	<25	<25
trans-1,2-Dichloroethene	**532**	**16**	<10	<10	<10	<10
Methyl-t-butyl ether	<25	<25	<25	<25	<25	<25
1,1-Dichloroethane	**265**	**28**	<25	<25	<25	<25
cis-1,2-Dichloroethene	**5,664**	**317**	**10**	<10	<10	<10
Chloroform	<25	<25	<25	<25	<25	<25
1,2-Dichloroethane	<25	<25	<25	<25	<25	<25
1,1,1-Trichloroethane	**25,451**	**291**	<25	<25	<25	<25
Carbon Tetrachloride	<25	<25	<25	<25	<25	<25
Benzene	<25	<25	<25	<25	<25	<25
Trichloroethene	**6,138**	**478**	**37**	<10	<10	<10
1,4-Dioxane	<25	<25	<25	<25	<25	<25
1,1,2-Trichloroethane	<25	<25	<25	<25	<25	<25
Toluene	<25	<25	<25	<25	<25	<25
1,2-Dibromoethane (EDB)	<25	<25	<25	<25	<25	<25
Tetrachloroethene	**1,577**	**125**	**20**	**9 J**	**12**	**7 J**
1,1,1,2-Tetrachloroethane	<25	<25	<25	<25	<25	<25
Chlorobenzene	<25	<25	<25	<25	<25	<25
Ethylbenzene	<25	<25	<25	<25	<25	<25
p & m-Xylene	<25	<25	<25	<25	<25	<25
1,1,2,2-Tetrachloroethane	<25	<25	<25	<25	<25	<25
o-Xylene	<25	<25	<25	<25	<25	<25
1,2,3-Trichloropropane	<25	<25	<25	<25	<25	<25
Isopropylbenzene	<25	<25	<25	<25	<25	<25
1,3,5-Trimethylbenzene	<25	<25	<25	<25	<25	<25
1,2,4-Trimethylbenzene	<25	<25	<25	<25	<25	<25
1,3-Dichlorobenzene	<25	<25	<25	<25	<25	<25
1,4-Dichlorobenzene	<25	<25	<25	<25	<25	<25
1,2-Dichlorobenzene	<25	<25	<25	<25	<25	<25
1,2,4-Trichlorobenzene	<25	<25	<25	<25	<25	<25
Naphthalene	<25	<25	<25	<25	<25	<25
1,2,3-Trichlorobenzene	<25	<25	<25	<25	<25	<25
2-Methylnaphthalene	<25	<25	<25	<25	<25	<25
TPH C_4-C_9	<5,000	<5,000	<5,000	<5,000	<5,000	<5,000
TPH C_{10}-C_{15}	<5,000	<5,000	<5,000	<5,000	<5,000	<5,000

Results in nanograms (ng). J = Values below limit of quantitation (LOQ) but above limit of detection (LOD). B = Detected in method blank.

Table 1

Beacon Environmental Services, Inc.
2203A Commerce Road, Suite 1
Forest Hill, MD 21050 USA

Analysis by EPA Method 8260C

Client Sample ID:	D-550	D-600	D-650	D-700	D-800	D-850
Project Number:	2962	2962	2962	2962	2962	2962
Lab File ID:	A15060115	A15060116	A15060117	A15060118	A15060119	A15060120
Received Date:	5/29/2015	5/29/2015	5/29/2015	5/29/2015	5/29/2015	5/29/2015
Analysis Date:	6/1/2015	6/1/2015	6/1/2015	6/1/2015	6/1/2015	6/1/2015
Analysis Time:	18:50	19:22	19:53	20:26	20:57	21:29
Matrix:	Soil Gas	Soil Gas	Soil Gas	Soil Gas	Soil Gas	Soil Gas
Units:	ng	ng	ng	ng	ng	ng
COMPOUNDS						
Vinyl Chloride	<10	<10	<10	<10	**9 J**	<10
Trichlorofluoromethane (Freon 11)	<25	<25	<25	<25	<25	<25
1,1-Dichloroethene	<10	<10	**6 J**	**7 J**	**28**	<10
1,1,2-Trichlorotrifluoroethane (Fr.113)	<25	<25	<25	<25	<25	<25
trans-1,2-Dichloroethene	<10	<10	<10	<10	<10	<10
Methyl-t-butyl ether	<25	<25	<25	<25	<25	<25
1,1-Dichloroethane	<25	<25	<25	<25	<25	<25
cis-1,2-Dichloroethene	<10	<10	<10	<10	<10	<10
Chloroform	<25	<25	<25	<25	<25	<25
1,2-Dichloroethane	<25	<25	<25	<25	<25	<25
1,1,1-Trichloroethane	<25	<25	<25	**27**	**138**	<25
Carbon Tetrachloride	<25	<25	<25	<25	<25	<25
Benzene	<25	<25	<25	<25	<25	<25
Trichloroethene	<10	<10	<10	<10	**22**	<10
1,4-Dioxane	<25	<25	<25	<25	<25	<25
1,1,2-Trichloroethane	<25	<25	<25	<25	<25	<25
Toluene	<25	<25	<25	<25	<25	<25
1,2-Dibromoethane (EDB)	<25	<25	<25	<25	<25	<25
Tetrachloroethene	**6 J**	<10	**11**	**86**	**125**	**12**
1,1,1,2-Tetrachloroethane	<25	<25	<25	<25	<25	<25
Chlorobenzene	<25	<25	<25	<25	<25	<25
Ethylbenzene	<25	<25	<25	<25	<25	<25
p & m-Xylene	<25	<25	<25	<25	<25	<25
1,1,2,2-Tetrachloroethane	<25	<25	<25	<25	<25	<25
o-Xylene	<25	<25	<25	<25	<25	<25
1,2,3-Trichloropropane	<25	<25	<25	<25	<25	<25
Isopropylbenzene	<25	<25	<25	<25	<25	<25
1,3,5-Trimethylbenzene	<25	<25	<25	<25	<25	<25
1,2,4-Trimethylbenzene	<25	<25	<25	<25	<25	<25
1,3-Dichlorobenzene	<25	<25	<25	<25	<25	<25
1,4-Dichlorobenzene	<25	<25	<25	<25	<25	<25
1,2-Dichlorobenzene	<25	<25	<25	<25	<25	<25
1,2,4-Trichlorobenzene	<25	<25	<25	<25	<25	<25
Naphthalene	<25	<25	<25	<25	<25	<25
1,2,3-Trichlorobenzene	<25	<25	<25	<25	<25	<25
2-Methylnaphthalene	<25	<25	<25	<25	<25	<25
TPH C_4-C_9	<5,000	<5,000	<5,000	<5,000	<5,000	<5,000
TPH C_{10}-C_{15}	<5,000	<5,000	<5,000	<5,000	<5,000	<5,000

Results in nanograms (ng). J = Values below limit of quantitation (LOQ) but above limit of detection (LOD). B = Detected in method blank.

Table 1

Beacon Environmental Services, Inc.
2203A Commerce Road, Suite 1
Forest Hill, MD 21050 USA

Analysis by EPA Method 8260C

Client Sample ID:	D-900	D-1000	D-e-275	D-e-325	D-e-475	D-e-525
Project Number:	2962	2962	2962	2962	2962	2962
Lab File ID:	A15060121	A15060122	A15060123	A15060124	A15060125	A15060126
Received Date:	5/29/2015	5/29/2015	5/29/2015	5/29/2015	5/29/2015	5/29/2015
Analysis Date:	6/1/2015	6/1/2015	6/1/2015	6/1/2015	6/2/2015	6/2/2015
Analysis Time:	22:01	22:30	23:03	23:31	9:05	9:33
Matrix:	Soil Gas	Soil Gas	Soil Gas	Soil Gas	Soil Gas	Soil Gas
Units:	ng	ng	ng	ng	ng	ng
COMPOUNDS						
Vinyl Chloride	<10	<10	<10	<10	<10	<10
Trichlorofluoromethane (Freon 11)	<25	<25	<25	<25	<25	<25
1,1-Dichloroethene	<10	<10	**41**	**5 J**	<10	<10
1,1,2-Trichlorotrifluoroethane (Fr.113)	<25	<25	<25	<25	<25	<25
trans-1,2-Dichloroethene	<10	<10	<10	<10	<10	<10
Methyl-t-butyl ether	<25	<25	<25	<25	<25	<25
1,1-Dichloroethane	<25	<25	<25	<25	<25	<25
cis-1,2-Dichloroethene	<10	<10	**72**	<10	<10	<10
Chloroform	<25	<25	<25	<25	<25	<25
1,2-Dichloroethane	<25	<25	<25	<25	<25	<25
1,1,1-Trichloroethane	<25	<25	**80**	**39**	<25	<25
Carbon Tetrachloride	<25	<25	<25	<25	<25	<25
Benzene	<25	<25	<25	<25	<25	<25
Trichloroethene	<10	<10	**365**	**8 J**	<10	<10
1,4-Dioxane	<25	<25	<25	<25	<25	<25
1,1,2-Trichloroethane	<25	<25	<25	<25	<25	<25
Toluene	<25	<25	<25	<25	<25	<25
1,2-Dibromoethane (EDB)	<25	<25	<25	<25	<25	<25
Tetrachloroethene	**5 J**	**9 J**	**25**	**17**	**7 J**	<10
1,1,1,2-Tetrachloroethane	<25	<25	<25	<25	<25	<25
Chlorobenzene	<25	<25	<25	<25	<25	<25
Ethylbenzene	<25	<25	<25	<25	<25	<25
p & m-Xylene	<25	<25	<25	<25	<25	<25
1,1,2,2-Tetrachloroethane	<25	<25	<25	<25	<25	<25
o-Xylene	<25	<25	<25	<25	<25	<25
1,2,3-Trichloropropane	<25	<25	<25	<25	<25	<25
Isopropylbenzene	<25	<25	<25	<25	<25	<25
1,3,5-Trimethylbenzene	<25	<25	<25	<25	<25	<25
1,2,4-Trimethylbenzene	<25	<25	<25	<25	<25	<25
1,3-Dichlorobenzene	<25	<25	<25	<25	<25	<25
1,4-Dichlorobenzene	<25	<25	<25	<25	<25	<25
1,2-Dichlorobenzene	<25	<25	<25	<25	<25	<25
1,2,4-Trichlorobenzene	<25	<25	<25	<25	<25	<25
Naphthalene	<25	<25	<25	<25	<25	<25
1,2,3-Trichlorobenzene	<25	<25	<25	<25	<25	<25
2-Methylnaphthalene	<25	<25	<25	<25	<25	<25
TPH C_4-C_9	<5,000	<5,000	<5,000	<5,000	<5,000	<5,000
TPH C_{10}-C_{15}	<5,000	<5,000	<5,000	<5,000	<5,000	<5,000

Results in nanograms (ng). J = Values below limit of quantitation (LOQ) but above limit of detection (LOD). B = Detected in method blank.

Table 1

Beacon Environmental Services, Inc.
2203A Commerce Road, Suite 1
Forest Hill, MD 21050 USA

Analysis by EPA Method 8260C

Client Sample ID:	E-50	E-150	E-250	E-300	E-350	E-400
Project Number:	2962	2962	2962	2962	2962	2962
Lab File ID:	A15060127	A15060128	A15060129	A15060205	A15060206	A15060207
Received Date:	5/29/2015	5/29/2015	5/29/2015	5/29/2015	5/29/2015	5/29/2015
Analysis Date:	6/2/2015	6/2/2015	6/2/2015	6/2/2015	6/2/2015	6/2/2015
Analysis Time:	10:02	10:30	11:00	13:29	13:58	14:26
Matrix:	Soil Gas	Soil Gas	Soil Gas	Soil Gas	Soil Gas	Soil Gas
Units:	ng	ng	ng	ng	ng	ng
COMPOUNDS						
Vinyl Chloride	**129**	**14**	**13**	<10	<10	<10
Trichlorofluoromethane (Freon 11)	<25	<25	<25	<25	<25	<25
1,1-Dichloroethene	**811**	**47**	**839**	**48**	<10	<10
1,1,2-Trichlorotrifluoroethane (Fr.113)	<25	<25	<25	<25	<25	<25
trans-1,2-Dichloroethene	**20**	**8 J**	**34**	<10	<10	<10
Methyl-t-butyl ether	<25	<25	<25	<25	<25	<25
1,1-Dichloroethane	**79**	**185**	**54**	<25	<25	<25
cis-1,2-Dichloroethene	**68**	**23**	**475**	**90**	<10	**7 J**
Chloroform	<25	<25	**42**	<25	<25	<25
1,2-Dichloroethane	<25	<25	<25	<25	<25	<25
1,1,1-Trichloroethane	**3,326**	**420**	**1,634**	**241**	<25	<25
Carbon Tetrachloride	<25	<25	<25	<25	<25	<25
Benzene	<25	<25	<25	<25	<25	<25
Trichloroethene	**673**	**56**	**3,489**	**338**	<10	**7 J**
1,4-Dioxane	<25	<25	<25	<25	<25	<25
1,1,2-Trichloroethane	<25	<25	<25	<25	<25	<25
Toluene	<25	<25	<25	<25	<25	<25
1,2-Dibromoethane (EDB)	<25	<25	<25	<25	<25	<25
Tetrachloroethene	**171**	**19**	**509**	**16**	**6 J**	**13**
1,1,1,2-Tetrachloroethane	<25	<25	<25	<25	<25	<25
Chlorobenzene	<25	<25	<25	<25	<25	<25
Ethylbenzene	<25	<25	<25	<25	<25	<25
p & m-Xylene	<25	<25	<25	<25	<25	<25
1,1,2,2-Tetrachloroethane	<25	<25	<25	<25	<25	<25
o-Xylene	<25	<25	<25	<25	<25	<25
1,2,3-Trichloropropane	<25	<25	<25	<25	<25	<25
Isopropylbenzene	<25	<25	<25	<25	<25	<25
1,3,5-Trimethylbenzene	<25	<25	<25	<25	<25	<25
1,2,4-Trimethylbenzene	<25	<25	<25	<25	<25	<25
1,3-Dichlorobenzene	<25	<25	<25	<25	<25	<25
1,4-Dichlorobenzene	<25	<25	<25	<25	<25	<25
1,2-Dichlorobenzene	<25	<25	<25	<25	<25	<25
1,2,4-Trichlorobenzene	<25	<25	<25	<25	<25	<25
Naphthalene	<25	<25	<25	<25	<25	<25
1,2,3-Trichlorobenzene	<25	<25	<25	<25	<25	<25
2-Methylnaphthalene	<25	<25	<25	<25	<25	<25
TPH C_4-C_9	<5,000	<5,000	<5,000	<5,000	<5,000	<5,000
TPH C_{10}-C_{15}	<5,000	<5,000	<5,000	<5,000	<5,000	<5,000

Results in nanograms (ng). J = Values below limit of quantitation (LOQ) but above limit of detection (LOD). B = Detected in method blank.

Table 1

Beacon Environmental Services, Inc.
2203A Commerce Road, Suite 1
Forest Hill, MD 21050 USA

Analysis by EPA Method 8260C

Client Sample ID:	E-400 Dup	E-500	E-600	E-650	E-700	E-800
Project Number:	2962	2962	2962	2962	2962	2962
Lab File ID:	A15060208	A15060209	A15060210	A15060211	A15060212	A15060213
Received Date:	5/29/2015	5/29/2015	5/29/2015	5/29/2015	5/29/2015	5/29/2015
Analysis Date:	6/2/2015	6/2/2015	6/2/2015	6/2/2015	6/2/2015	6/2/2015
Analysis Time:	14:55	15:23	15:52	16:22	16:53	17:26
Matrix:	Soil Gas	Soil Gas	Soil Gas	Soil Gas	Soil Gas	Soil Gas
Units:	ng	ng	ng	ng	ng	ng
COMPOUNDS						
Vinyl Chloride	<10	<10	<10	<10	**29**	<10
Trichlorofluoromethane (Freon 11)	<25	<25	<25	<25	<25	<25
1,1-Dichloroethene	<10	<10	<10	**7 J**	**594**	<10
1,1,2-Trichlorotrifluoroethane (Fr.113)	<25	<25	<25	<25	<25	<25
trans-1,2-Dichloroethene	<10	<10	<10	<10	**16**	<10
Methyl-t-butyl ether	<25	<25	<25	<25	<25	<25
1,1-Dichloroethane	<25	<25	<25	<25	**105**	<25
cis-1,2-Dichloroethene	<10	<10	<10	<10	**81**	<10
Chloroform	<25	<25	<25	<25	<25	<25
1,2-Dichloroethane	<25	<25	<25	<25	<25	<25
1,1,1-Trichloroethane	<25	<25	<25	<25	**4,860**	<25
Carbon Tetrachloride	<25	<25	<25	<25	<25	<25
Benzene	<25	<25	<25	<25	<25	<25
Trichloroethene	**6 J**	<10	<10	**33**	**2,866**	<10
1,4-Dioxane	<25	<25	<25	<25	<25	<25
1,1,2-Trichloroethane	<25	<25	<25	<25	<25	<25
Toluene	<25	<25	<25	<25	<25	<25
1,2-Dibromoethane (EDB)	<25	<25	<25	<25	<25	<25
Tetrachloroethene	**13**	**21**	<10	**78**	**7,517**	**29**
1,1,1,2-Tetrachloroethane	<25	<25	<25	<25	<25	<25
Chlorobenzene	<25	<25	<25	<25	<25	<25
Ethylbenzene	<25	<25	<25	<25	<25	<25
p & m-Xylene	<25	<25	<25	<25	<25	<25
1,1,2,2-Tetrachloroethane	<25	<25	<25	<25	<25	<25
o-Xylene	<25	<25	<25	<25	<25	<25
1,2,3-Trichloropropane	<25	<25	<25	<25	<25	<25
Isopropylbenzene	<25	<25	<25	<25	<25	<25
1,3,5-Trimethylbenzene	<25	<25	<25	<25	<25	<25
1,2,4-Trimethylbenzene	<25	<25	<25	<25	<25	<25
1,3-Dichlorobenzene	<25	<25	<25	<25	<25	<25
1,4-Dichlorobenzene	<25	<25	<25	<25	<25	<25
1,2-Dichlorobenzene	<25	<25	<25	<25	<25	<25
1,2,4-Trichlorobenzene	<25	<25	<25	<25	<25	<25
Naphthalene	<25	<25	<25	<25	<25	<25
1,2,3-Trichlorobenzene	<25	<25	<25	<25	<25	<25
2-Methylnaphthalene	<25	<25	<25	<25	<25	<25
TPH C_4-C_9	<5,000	<5,000	<5,000	<5,000	<5,000	<5,000
TPH C_{10}-C_{15}	<5,000	<5,000	<5,000	<5,000	<5,000	<5,000

Results in nanograms (ng). J = Values below limit of quantitation (LOQ) but above limit of detection (LOD). B = Detected in method blank.

Table 1

Beacon Environmental Services, Inc.
2203A Commerce Road, Suite 1
Forest Hill, MD 21050 USA

Analysis by EPA Method 8260C

Client Sample ID:	E-f-325	E-f-400	E-f-525	F-0	F-100	F-200
Project Number:	2962	2962	2962	2962	2962	2962
Lab File ID:	A15060214	A15060215	A15060216	A15060217	A15060218	A15060219
Received Date:	5/29/2015	5/29/2015	5/29/2015	5/29/2015	5/29/2015	5/29/2015
Analysis Date:	6/2/2015	6/2/2015	6/2/2015	6/2/2015	6/2/2015	6/2/2015
Analysis Time:	17:54	18:24	18:52	19:21	19:53	20:24
Matrix:	Soil Gas	Soil Gas	Soil Gas	Soil Gas	Soil Gas	Soil Gas
Units:	ng	ng	ng	ng	ng	ng
COMPOUNDS						
Vinyl Chloride	<10	<10	<10	<10	**8 J**	<10
Trichlorofluoromethane (Freon 11)	<25	<25	<25	<25	<25	<25
1,1-Dichloroethene	<10	<10	<10	<10	**247**	<10
1,1,2-Trichlorotrifluoroethane (Fr.113)	<25	<25	<25	<25	<25	<25
trans-1,2-Dichloroethene	<10	<10	<10	<10	**14**	<10
Methyl-t-butyl ether	<25	<25	<25	<25	<25	<25
1,1-Dichloroethane	<25	<25	<25	<25	**65**	<25
cis-1,2-Dichloroethene	<10	<10	<10	<10	**554**	<10
Chloroform	<25	<25	<25	<25	<25	<25
1,2-Dichloroethane	<25	<25	<25	<25	<25	<25
1,1,1-Trichloroethane	<25	<25	<25	<25	**869**	<25
Carbon Tetrachloride	<25	<25	<25	<25	<25	<25
Benzene	<25	<25	<25	<25	<25	<25
Trichloroethene	<10	<10	<10	<10	**7,012**	**10**
1,4-Dioxane	<25	<25	<25	<25	<25	<25
1,1,2-Trichloroethane	<25	<25	<25	<25	<25	<25
Toluene	<25	<25	<25	<25	<25	<25
1,2-Dibromoethane (EDB)	<25	<25	<25	<25	<25	<25
Tetrachloroethene	<10	**15**	**5 J**	**8 J**	**3,333**	**33**
1,1,1,2-Tetrachloroethane	<25	<25	<25	<25	<25	<25
Chlorobenzene	<25	<25	<25	<25	<25	<25
Ethylbenzene	<25	<25	<25	<25	<25	<25
p & m-Xylene	<25	<25	<25	<25	<25	<25
1,1,2,2-Tetrachloroethane	<25	<25	<25	<25	<25	<25
o-Xylene	<25	<25	<25	<25	<25	<25
1,2,3-Trichloropropane	<25	<25	<25	<25	<25	<25
Isopropylbenzene	<25	<25	<25	<25	<25	<25
1,3,5-Trimethylbenzene	<25	<25	<25	<25	<25	<25
1,2,4-Trimethylbenzene	<25	<25	<25	<25	<25	<25
1,3-Dichlorobenzene	<25	<25	<25	<25	<25	<25
1,4-Dichlorobenzene	<25	<25	<25	<25	<25	<25
1,2-Dichlorobenzene	<25	<25	<25	<25	<25	<25
1,2,4-Trichlorobenzene	<25	<25	<25	<25	<25	<25
Naphthalene	<25	<25	<25	<25	<25	<25
1,2,3-Trichlorobenzene	<25	<25	<25	<25	<25	<25
2-Methylnaphthalene	<25	<25	<25	<25	<25	<25
TPH C_4-C_9	<5,000	<5,000	<5,000	<5,000	<5,000	<5,000
TPH C_{10}-C_{15}	<5,000	<5,000	<5,000	<5,000	<5,000	<5,000

Results in nanograms (ng). J = Values below limit of quantitation (LOQ) but above limit of detection (LOD). B = Detected in method blank.

Table 1

Beacon Environmental Services, Inc.
2203A Commerce Road, Suite 1
Forest Hill, MD 21050 USA

Analysis by EPA Method 8260C

Client Sample ID:	F-250	F-300	F-350	F-400	F-500	F-550
Project Number:	2962	2962	2962	2962	2962	2962
Lab File ID:	A15060220	A15060221	A15060222	A15060223	A15060224	A15060225
Received Date:	5/29/2015	5/29/2015	5/29/2015	5/29/2015	5/29/2015	5/29/2015
Analysis Date:	6/2/2015	6/2/2015	6/2/2015	6/2/2015	6/2/2015	6/2/2015
Analysis Time:	20:58	21:26	21:58	22:30	22:59	23:28
Matrix:	Soil Gas	Soil Gas	Soil Gas	Soil Gas	Soil Gas	Soil Gas
Units:	ng	ng	ng	ng	ng	ng
COMPOUNDS						
Vinyl Chloride	<10	<10	<10	<10	<10	<10
Trichlorofluoromethane (Freon 11)	<25	<25	<25	<25	<25	<25
1,1-Dichloroethene	<10	<10	<10	<10	<10	<10
1,1,2-Trichlorotrifluoroethane (Fr.113)	<25	<25	<25	<25	<25	<25
trans-1,2-Dichloroethene	<10	<10	<10	<10	<10	<10
Methyl-t-butyl ether	<25	<25	<25	<25	<25	<25
1,1-Dichloroethane	<25	<25	<25	<25	<25	<25
cis-1,2-Dichloroethene	<10	<10	<10	<10	<10	<10
Chloroform	<25	<25	<25	<25	<25	<25
1,2-Dichloroethane	<25	<25	<25	<25	<25	<25
1,1,1-Trichloroethane	<25	<25	<25	<25	<25	<25
Carbon Tetrachloride	<25	<25	<25	<25	<25	<25
Benzene	<25	<25	<25	<25	<25	<25
Trichloroethene	<10	<10	**9 J**	<10	<10	<10
1,4-Dioxane	<25	<25	<25	<25	<25	<25
1,1,2-Trichloroethane	<25	<25	<25	<25	<25	<25
Toluene	<25	**25**	**286**	<25	<25	<25
1,2-Dibromoethane (EDB)	<25	<25	<25	<25	<25	<25
Tetrachloroethene	<10	**21**	**34**	**7 J**	<10	**5 J**
1,1,1,2-Tetrachloroethane	<25	<25	<25	<25	<25	<25
Chlorobenzene	<25	<25	<25	<25	<25	<25
Ethylbenzene	<25	<25	<25	<25	<25	<25
p & m-Xylene	<25	<25	<25	<25	<25	<25
1,1,2,2-Tetrachloroethane	<25	<25	<25	<25	<25	<25
o-Xylene	<25	<25	<25	<25	<25	<25
1,2,3-Trichloropropane	<25	<25	<25	<25	<25	<25
Isopropylbenzene	<25	<25	<25	<25	<25	<25
1,3,5-Trimethylbenzene	<25	<25	<25	<25	<25	<25
1,2,4-Trimethylbenzene	<25	<25	<25	<25	<25	<25
1,3-Dichlorobenzene	<25	<25	<25	<25	<25	<25
1,4-Dichlorobenzene	<25	<25	<25	<25	<25	<25
1,2-Dichlorobenzene	<25	<25	<25	<25	<25	<25
1,2,4-Trichlorobenzene	<25	<25	<25	<25	<25	<25
Naphthalene	<25	<25	<25	<25	<25	<25
1,2,3-Trichlorobenzene	<25	<25	<25	<25	<25	<25
2-Methylnaphthalene	<25	<25	<25	<25	<25	<25
TPH C_4-C_9	<5,000	<5,000	<5,000	<5,000	<5,000	<5,000
TPH C_{10}-C_{15}	<5,000	<5,000	<5,000	<5,000	<5,000	<5,000

Results in nanograms (ng). J = Values below limit of quantitation (LOQ) but above limit of detection (LOD). B = Detected in method blank.

Table 1

Beacon Environmental Services, Inc.
2203A Commerce Road, Suite 1
Forest Hill, MD 21050 USA

Analysis by EPA Method 8260C

Client Sample ID:	F-600	F-650	F-700	F-750	F-850	G-200
Project Number:	2962	2962	2962	2962	2962	2962
Lab File ID:	A15060226	A15060227	A15060228	A15060229	A15060230	A15060231
Received Date:	5/29/2015	5/29/2015	5/29/2015	5/29/2015	5/29/2015	5/29/2015
Analysis Date:	6/2/2015	6/3/2015	6/3/2015	6/3/2015	6/3/2015	6/3/2015
Analysis Time:	23:56	0:29	1:00	1:29	1:57	2:25
Matrix:	Soil Gas	Soil Gas	Soil Gas	Soil Gas	Soil Gas	Soil Gas
Units:	ng	ng	ng	ng	ng	ng
COMPOUNDS						
Vinyl Chloride	<10	<10	<10	<10	<10	<10
Trichlorofluoromethane (Freon 11)	<25	<25	<25	<25	<25	<25
1,1-Dichloroethene	<10	<10	**34**	**12**	<10	**19**
1,1,2-Trichlorotrifluoroethane (Fr.113)	<25	<25	<25	<25	<25	<25
trans-1,2-Dichloroethene	<10	<10	<10	**7 J**	<10	**11**
Methyl-t-butyl ether	<25	<25	<25	<25	<25	<25
1,1-Dichloroethane	<25	<25	<25	**28**	<25	**42**
cis-1,2-Dichloroethene	<10	<10	**7 J**	**142**	<10	**497**
Chloroform	<25	<25	<25	<25	<25	<25
1,2-Dichloroethane	<25	<25	<25	<25	<25	<25
1,1,1-Trichloroethane	<25	<25	**300**	**100**	<25	**108**
Carbon Tetrachloride	<25	<25	<25	<25	<25	<25
Benzene	<25	<25	<25	<25	<25	<25
Trichloroethene	<10	<10	**88**	**264**	<10	**769**
1,4-Dioxane	<25	<25	<25	<25	<25	<25
1,1,2-Trichloroethane	<25	<25	<25	<25	<25	<25
Toluene	<25	<25	<25	<25	<25	<25
1,2-Dibromoethane (EDB)	<25	<25	<25	<25	<25	<25
Tetrachloroethene	**15**	**6 J**	**857**	**450**	**8 J**	**12,062**
1,1,1,2-Tetrachloroethane	<25	<25	<25	<25	<25	<25
Chlorobenzene	<25	<25	<25	<25	<25	<25
Ethylbenzene	<25	<25	<25	<25	<25	<25
p & m-Xylene	<25	<25	<25	<25	<25	<25
1,1,2,2-Tetrachloroethane	<25	<25	<25	<25	<25	<25
o-Xylene	<25	<25	<25	<25	<25	<25
1,2,3-Trichloropropane	<25	<25	<25	<25	<25	<25
Isopropylbenzene	<25	<25	<25	<25	<25	<25
1,3,5-Trimethylbenzene	<25	<25	<25	<25	<25	<25
1,2,4-Trimethylbenzene	<25	<25	<25	<25	<25	<25
1,3-Dichlorobenzene	<25	<25	<25	<25	<25	<25
1,4-Dichlorobenzene	<25	<25	<25	<25	<25	<25
1,2-Dichlorobenzene	<25	<25	<25	<25	<25	<25
1,2,4-Trichlorobenzene	<25	<25	<25	<25	<25	<25
Naphthalene	<25	<25	<25	<25	<25	<25
1,2,3-Trichlorobenzene	<25	<25	<25	<25	<25	<25
2-Methylnaphthalene	<25	<25	<25	<25	<25	<25
TPH C_4-C_9	<5,000	<5,000	<5,000	<5,000	<5,000	<5,000
TPH C_{10}-C_{15}	<5,000	<5,000	<5,000	<5,000	<5,000	<5,000

Results in nanograms (ng). J = Values below limit of quantitation (LOQ) but above limit of detection (LOD). B = Detected in method blank.

Table 1

Beacon Environmental Services, Inc.
2203A Commerce Road, Suite 1
Forest Hill, MD 21050 USA

Analysis by EPA Method 8260C

Client Sample ID:	MW3-550	MW3-600	MW3-800	MW3-800 Dup	MW3-900	W-650
Project Number:	2962	2962	2962	2962	2962	2962
Lab File ID:	A15060232	A15060233	A15060234	A15060235	A15060236	A15060237
Received Date:	5/29/2015	5/29/2015	5/29/2015	5/29/2015	5/29/2015	5/29/2015
Analysis Date:	6/3/2015	6/3/2015	6/3/2015	6/3/2015	6/3/2015	6/3/2015
Analysis Time:	2:58	3:30	3:59	4:29	4:58	5:32
Matrix:	Soil Gas	Soil Gas	Soil Gas	Soil Gas	Soil Gas	Soil Gas
Units:	ng	ng	ng	ng	ng	ng
COMPOUNDS						
Vinyl Chloride	**18**	**219**	<10	<10	<10	**5 J**
Trichlorofluoromethane (Freon 11)	<25	<25	<25	<25	<25	<25
1,1-Dichloroethene	**81**	**4,879**	**6 J**	<10	**6 J**	**65**
1,1,2-Trichlorotrifluoroethane (Fr.113)	<25	<25	<25	<25	<25	<25
trans-1,2-Dichloroethene	**98**	**225**	<10	<10	<10	**13**
Methyl-t-butyl ether	<25	<25	<25	<25	<25	<25
1,1-Dichloroethane	**156**	**135**	<25	<25	<25	**76**
cis-1,2-Dichloroethene	**3,704**	**13,801**	**15**	**7 J**	**15**	**328**
Chloroform	<25	<25	<25	<25	<25	<25
1,2-Dichloroethane	<25	<25	<25	<25	<25	<25
1,1,1-Trichloroethane	**1,299**	**52,493**	**46**	<25	**76**	**506**
Carbon Tetrachloride	<25	<25	<25	<25	<25	<25
Benzene	<25	<25	<25	<25	<25	<25
Trichloroethene	**1,475**	**49,280**	**45**	**19**	**34**	**401**
1,4-Dioxane	<25	<25	<25	<25	<25	<25
1,1,2-Trichloroethane	<25	<25	<25	<25	<25	<25
Toluene	<25	**35**	<25	<25	<25	<25
1,2-Dibromoethane (EDB)	<25	<25	<25	<25	<25	<25
Tetrachloroethene	**575**	**23,941**	**21**	**9 J**	**21**	**86**
1,1,1,2-Tetrachloroethane	<25	<25	<25	<25	<25	<25
Chlorobenzene	<25	<25	<25	<25	<25	<25
Ethylbenzene	<25	<25	<25	<25	<25	<25
p & m-Xylene	<25	<25	<25	<25	<25	<25
1,1,2,2-Tetrachloroethane	<25	<25	<25	<25	<25	<25
o-Xylene	<25	<25	<25	<25	<25	<25
1,2,3-Trichloropropane	<25	<25	<25	<25	<25	<25
Isopropylbenzene	<25	<25	<25	<25	<25	<25
1,3,5-Trimethylbenzene	<25	<25	<25	<25	<25	<25
1,2,4-Trimethylbenzene	<25	<25	<25	<25	<25	<25
1,3-Dichlorobenzene	<25	<25	<25	<25	<25	<25
1,4-Dichlorobenzene	<25	<25	<25	<25	<25	<25
1,2-Dichlorobenzene	<25	<25	<25	<25	<25	<25
1,2,4-Trichlorobenzene	<25	<25	<25	<25	<25	<25
Naphthalene	<25	<25	<25	<25	<25	<25
1,2,3-Trichlorobenzene	<25	<25	<25	<25	<25	<25
2-Methylnaphthalene	<25	<25	<25	<25	<25	<25
TPH C_4-C_9	<5,000	<5,000	<5,000	<5,000	<5,000	<5,000
TPH C_{10}-C_{15}	<5,000	<5,000	<5,000	<5,000	<5,000	<5,000

Results in nanograms (ng). J = Values below limit of quantitation (LOQ) but above limit of detection (LOD). B = Detected in method blank.

Table 1

Beacon Environmental Services, Inc.
2203A Commerce Road, Suite 1
Forest Hill, MD 21050 USA

Analysis by EPA Method 8260C

Client Sample ID:	W-750	W-850	X-550	X-700	X-850	mb150601c
Project Number:	2962	2962	2962	2962	2962	
Lab File ID:	A15060238	A15060239	A15060240	A15060241	A15060242	C15060103
Received Date:	5/29/2015	5/29/2015	5/29/2015	5/29/2015	5/29/2015	
Analysis Date:	6/3/2015	6/3/2015	6/3/2015	6/3/2015	6/3/2015	6/1/2015
Analysis Time:	6:04	6:34	7:03	7:31	7:59	13:26
Matrix:	Soil Gas	Soil Gas	Soil Gas	Soil Gas	Soil Gas	
Units:	ng	ng	ng	ng	ng	ng
COMPOUNDS						
Vinyl Chloride	<10	<10	<10	**41**	<10	<10
Trichlorofluoromethane (Freon 11)	<25	<25	<25	<25	<25	<25
1,1-Dichloroethene	<10	**33**	**52**	**2,803**	**8 J**	<10
1,1,2-Trichlorotrifluoroethane (Fr.113)	<25	<25	<25	<25	<25	<25
trans-1,2-Dichloroethene	<10	**6 J**	**18**	**541**	<10	<10
Methyl-t-butyl ether	<25	<25	<25	<25	<25	<25
1,1-Dichloroethane	<25	<25	**26**	**150**	<25	<25
cis-1,2-Dichloroethene	<10	**233**	**536**	**24,175**	**32**	<10
Chloroform	<25	<25	<25	<25	<25	<25
1,2-Dichloroethane	<25	<25	<25	<25	<25	<25
1,1,1-Trichloroethane	<25	**322**	**1,751**	**49,279**	**59**	<25
Carbon Tetrachloride	<25	<25	<25	<25	<25	<25
Benzene	<25	<25	<25	<25	<25	<25
Trichloroethene	<10	**478**	**2,455**	**49,178**	**49**	<10
1,4-Dioxane	<25	<25	<25	<25	<25	<25
1,1,2-Trichloroethane	<25	<25	<25	<25	<25	<25
Toluene	<25	<25	<25	<25	<25	<25
1,2-Dibromoethane (EDB)	<25	<25	<25	<25	<25	<25
Tetrachloroethene	<10	**260**	**1,002**	**31,769**	**36**	<10
1,1,1,2-Tetrachloroethane	<25	<25	<25	<25	<25	<25
Chlorobenzene	<25	<25	<25	<25	<25	<25
Ethylbenzene	<25	<25	<25	<25	<25	<25
p & m-Xylene	<25	<25	<25	<25	<25	<25
1,1,2,2-Tetrachloroethane	<25	<25	<25	<25	<25	<25
o-Xylene	<25	<25	<25	<25	<25	<25
1,2,3-Trichloropropane	<25	<25	<25	<25	<25	<25
Isopropylbenzene	<25	<25	<25	<25	<25	<25
1,3,5-Trimethylbenzene	<25	<25	<25	<25	<25	<25
1,2,4-Trimethylbenzene	<25	<25	<25	<25	<25	<25
1,3-Dichlorobenzene	<25	<25	<25	<25	<25	<25
1,4-Dichlorobenzene	<25	<25	<25	<25	<25	<25
1,2-Dichlorobenzene	<25	<25	<25	<25	<25	<25
1,2,4-Trichlorobenzene	<25	<25	<25	<25	<25	<25
Naphthalene	<25	<25	<25	<25	<25	<25
1,2,3-Trichlorobenzene	<25	<25	<25	<25	<25	<25
2-Methylnaphthalene	<25	<25	<25	<25	<25	<25
TPH C_4-C_9	<5,000	<5,000	<5,000	<5,000	<5,000	<5,000
TPH C_{10}-C_{15}	<5,000	<5,000	<5,000	<5,000	<5,000	<5,000

Results in nanograms (ng). J = Values below limit of quantitation (LOQ) but above limit of detection (LOD). B = Detected in method blank.

Table 1

Beacon Environmental Services, Inc.
2203A Commerce Road, Suite 1
Forest Hill, MD 21050 USA

Analysis by EPA Method 8260C

Client Sample ID:	mb150601a	mb150602c	mb150602a
Project Number:			
Lab File ID:	A15060103	C15060203	A15060203
Received Date:			
Analysis Date:	6/1/2015	6/2/2015	6/2/2015
Analysis Time:	12:42	14:09	12:32
Matrix:			
Units:	ng	ng	ng
COMPOUNDS			
Vinyl Chloride	<10	<10	<10
Trichlorofluoromethane (Freon 11)	<25	<25	<25
1,1-Dichloroethene	<10	<10	<10
1,1,2-Trichlorotrifluoroethane (Fr.113)	<25	<25	<25
trans-1,2-Dichloroethene	<10	<10	<10
Methyl-t-butyl ether	<25	<25	<25
1,1-Dichloroethane	<25	<25	<25
cis-1,2-Dichloroethene	<10	<10	<10
Chloroform	<25	<25	<25
1,2-Dichloroethane	<25	<25	<25
1,1,1-Trichloroethane	<25	<25	<25
Carbon Tetrachloride	<25	<25	<25
Benzene	<25	<25	<25
Trichloroethene	<10	<10	<10
1,4-Dioxane	<25	<25	<25
1,1,2-Trichloroethane	<25	<25	<25
Toluene	<25	<25	<25
1,2-Dibromoethane (EDB)	<25	<25	<25
Tetrachloroethene	<10	<10	<10
1,1,1,2-Tetrachloroethane	<25	<25	<25
Chlorobenzene	<25	<25	<25
Ethylbenzene	<25	<25	<25
p & m-Xylene	<25	<25	<25
1,1,2,2-Tetrachloroethane	<25	<25	<25
o-Xylene	<25	<25	<25
1,2,3-Trichloropropane	<25	<25	<25
Isopropylbenzene	<25	<25	<25
1,3,5-Trimethylbenzene	<25	<25	<25
1,2,4-Trimethylbenzene	<25	<25	<25
1,3-Dichlorobenzene	<25	<25	<25
1,4-Dichlorobenzene	<25	<25	<25
1,2-Dichlorobenzene	<25	<25	<25
1,2,4-Trichlorobenzene	<25	<25	<25
Naphthalene	<25	<25	<25
1,2,3-Trichlorobenzene	<25	<25	<25
2-Methylnaphthalene	<25	<25	<25
TPH C_4-C_9	<5,000	<5,000	<5,000
TPH C_{10}-C_{15}	<5,000	<5,000	<5,000

Results in nanograms (ng). J = Values below limit of quantitation (LOQ) but above limit of detection (LOD). B = Detected in method blank.

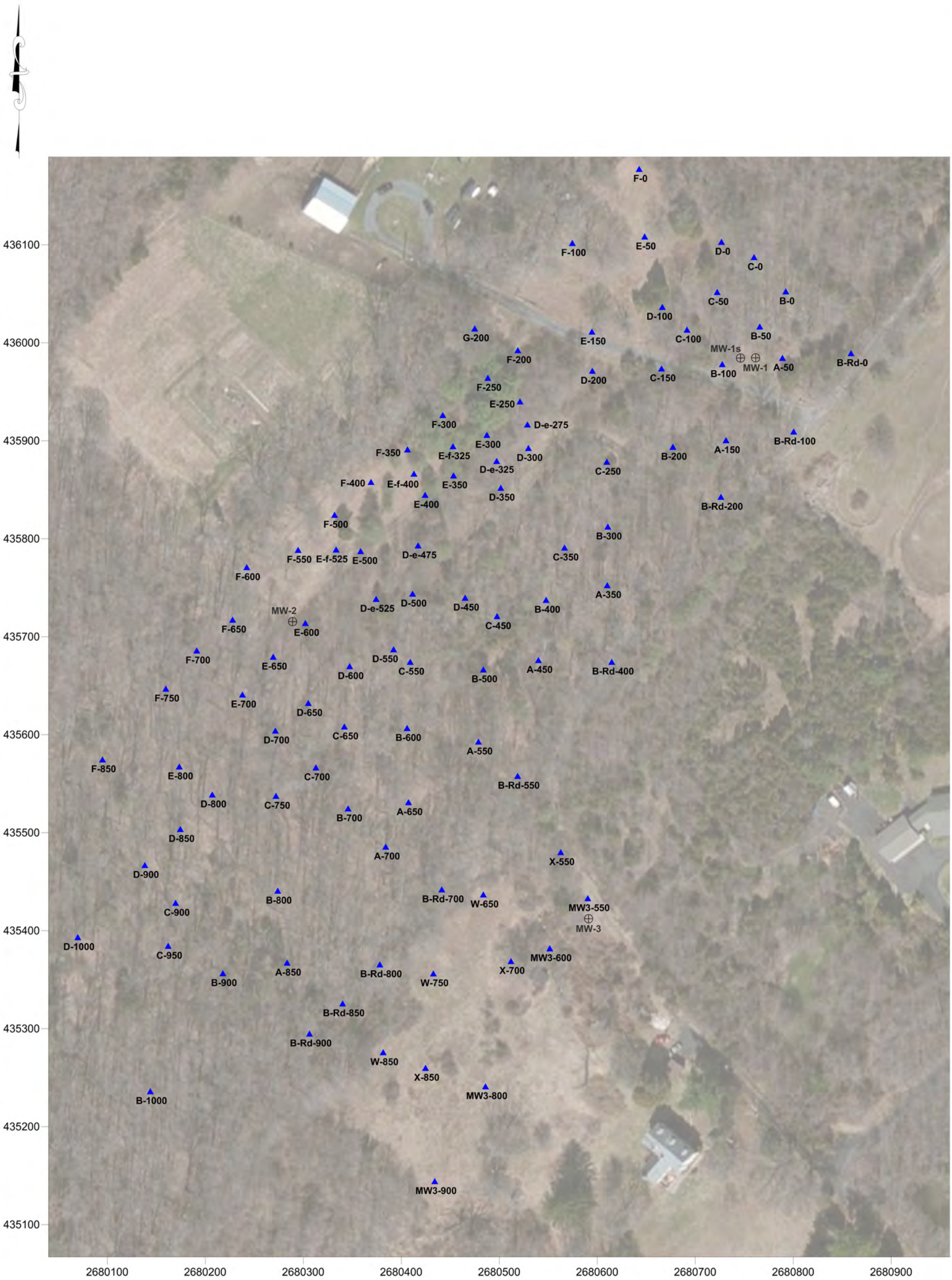

System: US State Plane 1983
Zone: Pennsylvania South FIPS 3702
Datum: NAD 1983
Coordinate Units: Feet

LEGEND

W-650 PASSIVE SOIL-GAS SAMPLE LOCATION

BEACON ENVIRONMENTAL SERVICES, INC.
2203A Commerce Road, Suite 1, Forest Hill, MD 21050 USA
www.Beacon-USA.com 1-410-838-8780
Beacon Project No. 2962, June 2015

Scale in Feet
0 100 200

Figure 1
Passive Soil-Gas Survey
Sample Locations

Nockamixon Township TCE Site
Nockamixon Township, PA

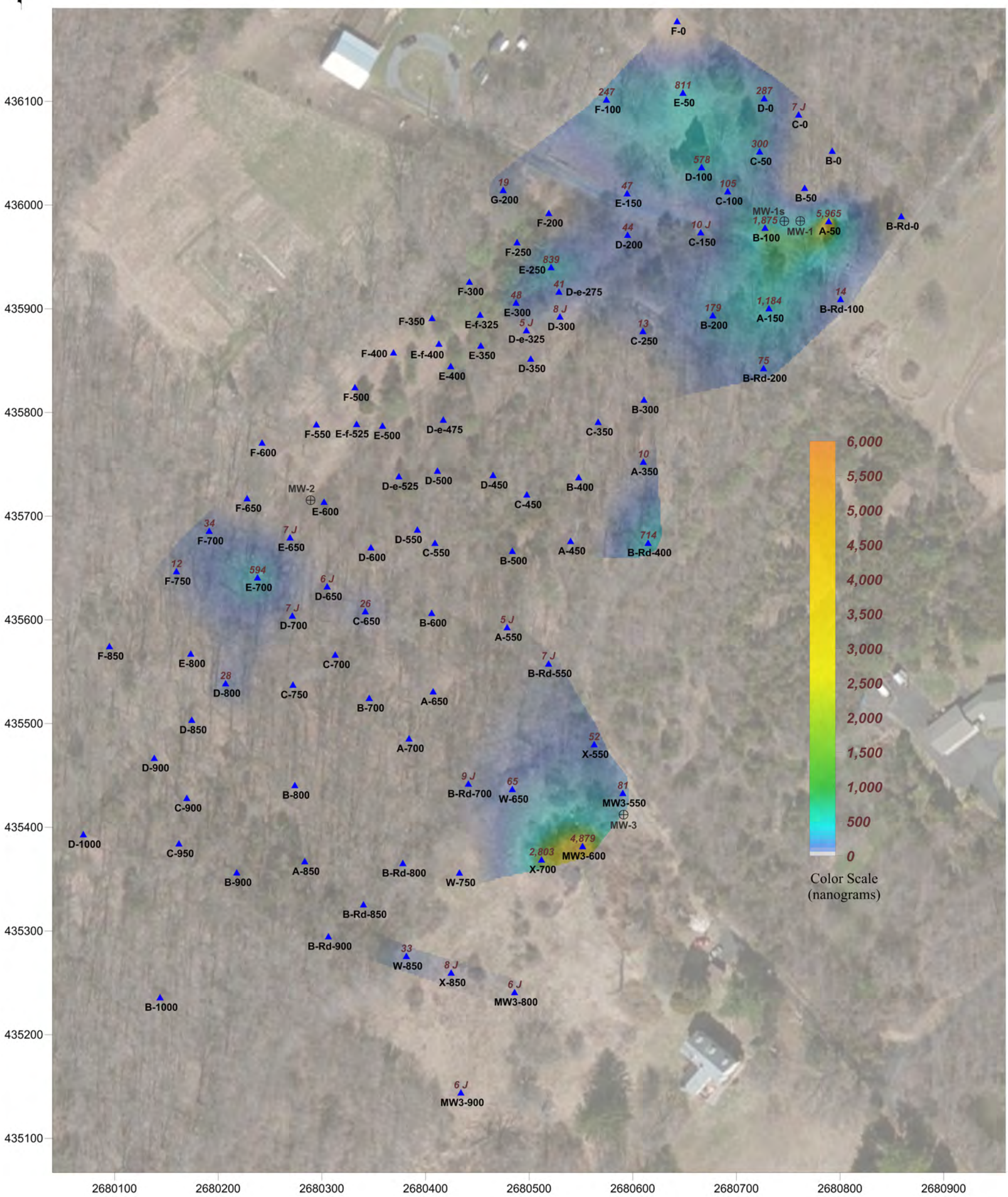

System: US State Plane 1983
Zone: Pennsylvania South FIPS 3702
Datum: NAD 1983
Coordinate Units: Feet

LEGEND

8 J NANOGRAMS/SAMPLER (J = Estimated Value)

▲ W-650 PASSIVE SOIL-GAS SAMPLE LOCATION

BEACON ENVIRONMENTAL SERVICES, INC.
2203A Commerce Road, Suite 1, Forest Hill, MD 21050 USA
www.Beacon-USA.com 1-410-838-8780
Beacon Project No. 2962, June 2015

Scale in Feet
0 100 200

Figure 2
Passive Soil-Gas Survey
1,1-Dichloroethene

Nockamixon Township TCE Site
Nockamixon Township, PA

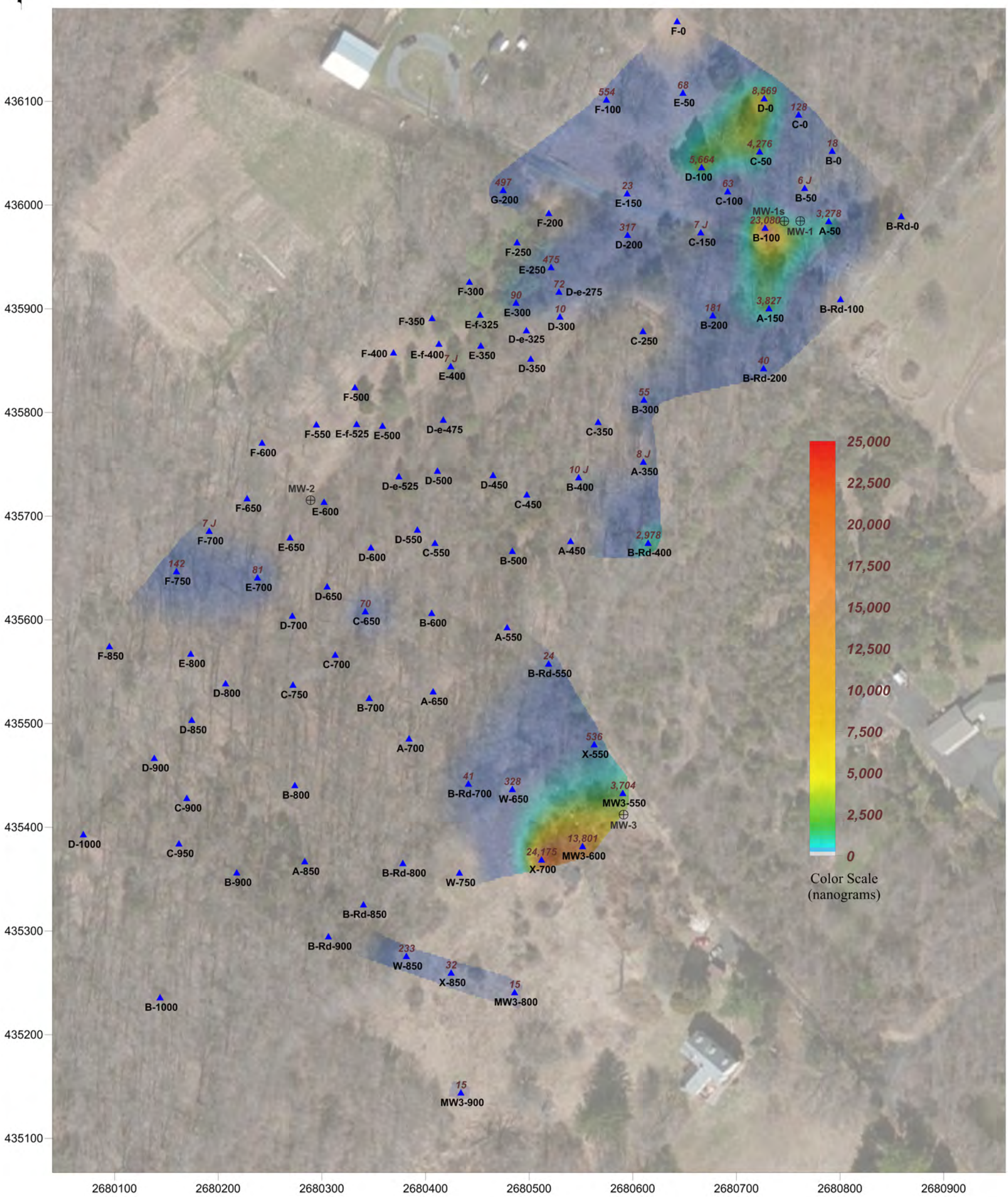

System: US State Plane 1983
Zone: Pennsylvania South FIPS 3702
Datum: NAD 1983
Coordinate Units: Feet

LEGEND

8 J NANOGRAMS/SAMPLER (J = Estimated Value)

▲ W-650 PASSIVE SOIL-GAS SAMPLE LOCATION

BEACON ENVIRONMENTAL SERVICES, INC.
2203A Commerce Road, Suite 1, Forest Hill, MD 21050 USA
www.Beacon-USA.com 1-410-838-8780
Beacon Project No. 2962, June 2015

Scale in Feet
0 100 200

Figure 3
Passive Soil-Gas Survey
cis-1,2-Dichloroethene

Nockamixon Township TCE Site
Nockamixon Township, PA

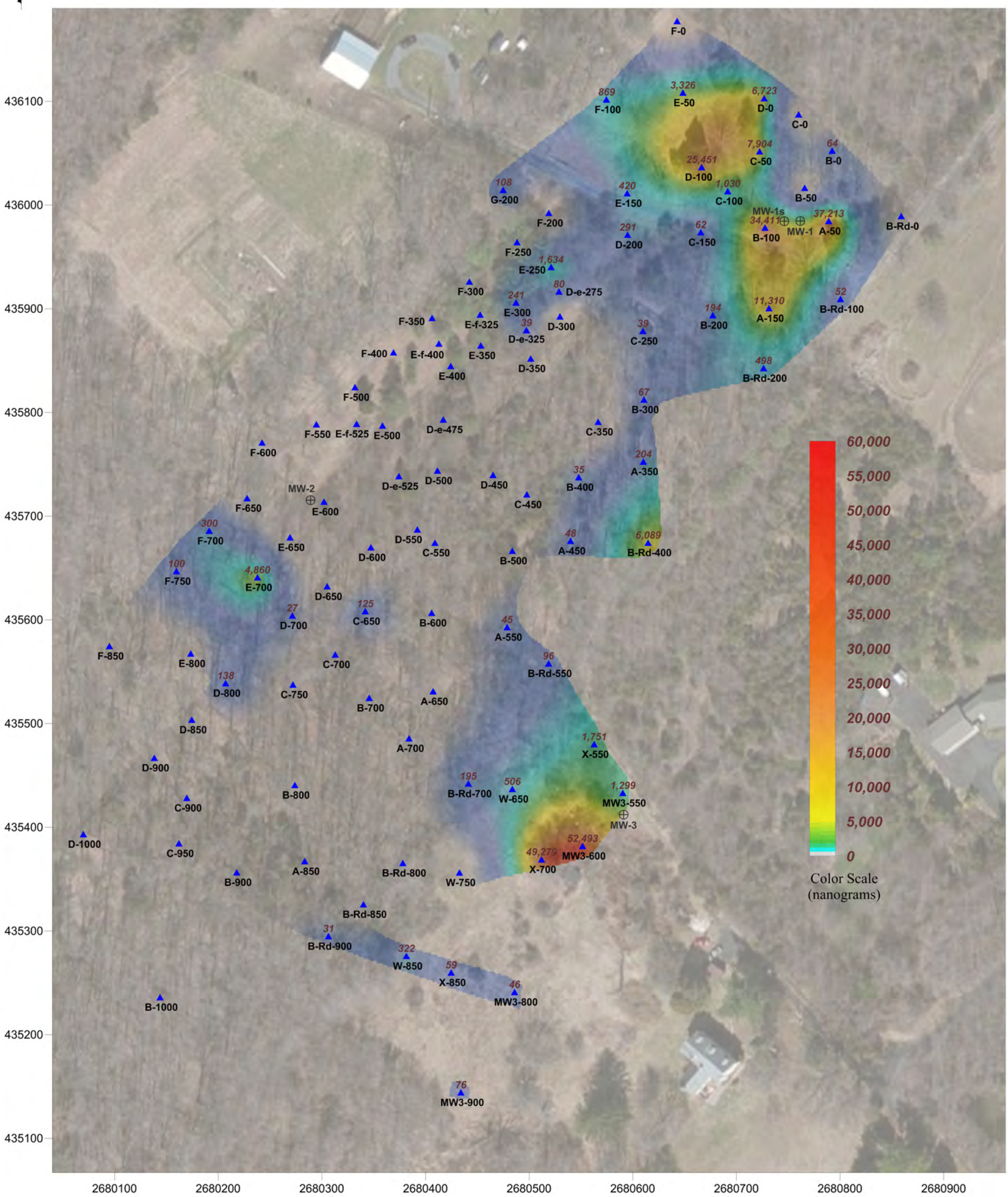

System: US State Plane 1983
Zone: Pennsylvania South FIPS 3702
Datum: NAD 1983
Coordinate Units: Feet

LEGEND

1,000 NANOGRAMS/SAMPLER

W-650 PASSIVE SOIL-GAS SAMPLE LOCATION

BEACON ENVIRONMENTAL SERVICES, INC.
2203A Commerce Road, Suite 1, Forest Hill, MD 21050 USA
www.Beacon-USA.com 1-410-838-8780
Beacon Project No. 2962, June 2015

Scale in Feet
0 100 200

Figure 4
Passive Soil-Gas Survey
1,1,1-Trichloroethane

Nockamixon Township TCE Site
Nockamixon Township, PA

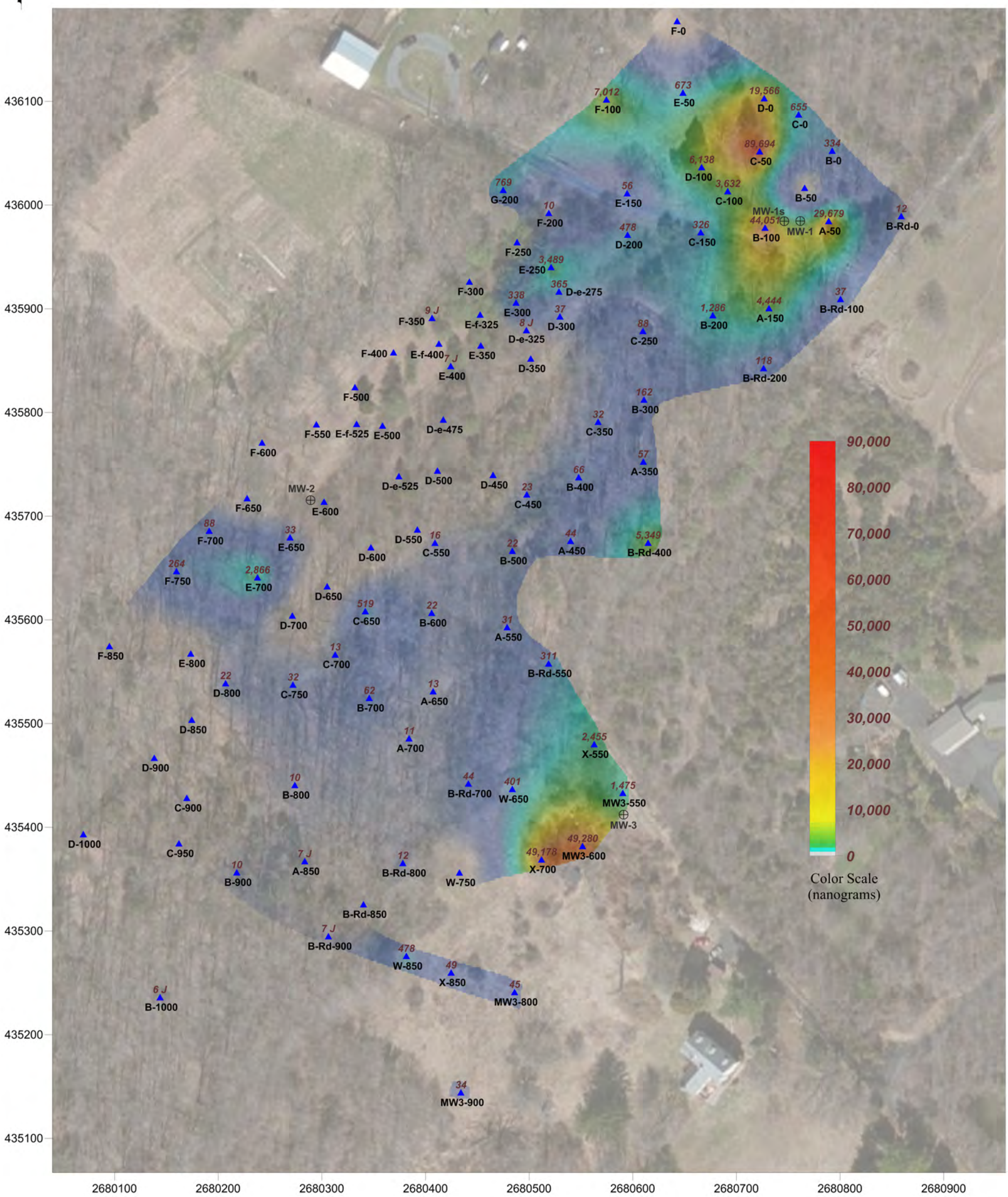

System: US State Plane 1983
Zone: Pennsylvania South FIPS 3702
Datum: NAD 1983
Coordinate Units: Feet

LEGEND

8 J NANOGRAMS/SAMPLER (J = Estimated Value)

▲ W-650 PASSIVE SOIL-GAS SAMPLE LOCATION

BEACON ENVIRONMENTAL SERVICES, INC.
2203A Commerce Road, Suite 1, Forest Hill, MD 21050 USA
www.Beacon-USA.com 1-410-838-8780
Beacon Project No. 2962, June 2015

Scale in Feet
0 100 200

Figure 5
Passive Soil-Gas Survey
Trichloroethene

Nockamixon Township TCE Site
Nockamixon Township, PA

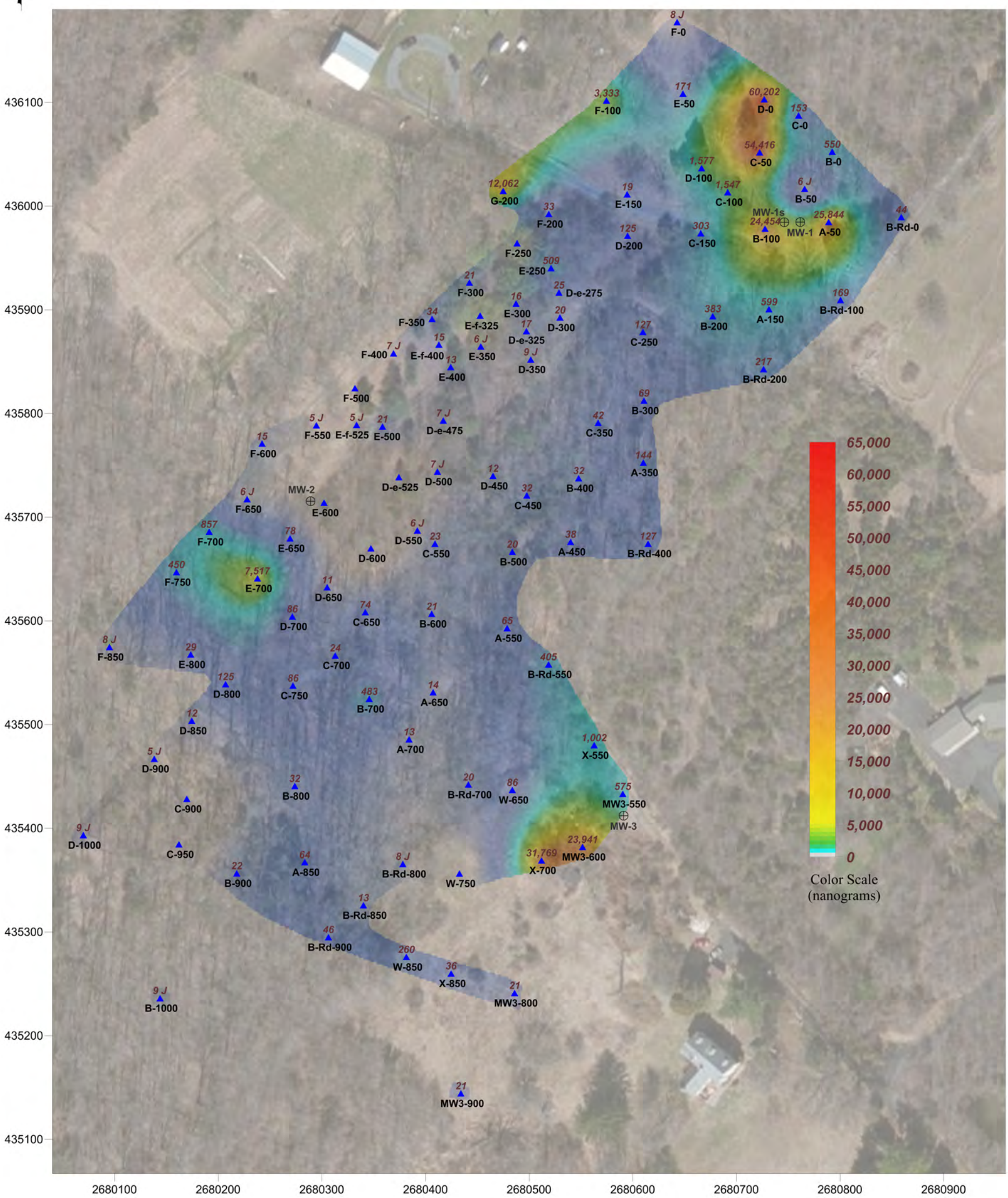

System: US State Plane 1983
Zone: Pennsylvania South FIPS 3702
Datum: NAD 1983
Coordinate Units: Feet

LEGEND

8 J NANOGRAMS/SAMPLER (J = Estimated Value)

▲ W-650 PASSIVE SOIL-GAS SAMPLE LOCATION

BEACON ENVIRONMENTAL SERVICES, INC.
2203A Commerce Road, Suite 1, Forest Hill, MD 21050 USA
www.Beacon-USA.com 1-410-838-8780
Beacon Project No. 2962, June 2015

Scale in Feet
0 100 200

Figure 6
Passive Soil-Gas Survey
Tetrachloroethene

Nockamixon Township TCE Site
Nockamixon Township, PA

Attachments

Attachment 1

APPLYING RESULTS FROM PASSIVE SOIL-GAS SURVEYS

The utility of soil-gas surveys is directly proportional to their accuracy in reflecting and representing changes in the subsurface concentrations of source compounds. Passive soil-gas survey results are the mass collected from the vapor-phase emanating from the source(s). The vapor-phase is merely a fractional trace of the source(s) and, as a matter of convenience, the units used in reporting detection values from passive soil-gas surveys are smaller than those employed for source-compound concentrations.

Passive soil gas data are reported in mass of compounds identified per sample location (e.g., nanograms (ng) or micrograms (µg) per sampler). Results from a passive soil gas survey typically are then used to guide where follow-on intrusive samples should be collected to obtain corresponding concentrations of the contaminants in soil, soil gas, and/or groundwater, as well as eliminate those areas where intrusive samples are not required. It is not practical to report passive soil gas data as concentration because the sampler's uptake rates of the compounds are often greater than the replenishment rates of the compounds around the sampler, which results in low bias measurements, and the replenishment rates will be dependent on several factors that include, at a minimum, soil gas concentrations, soil porosity and permeability, and soil moisture level.

Whatever the relative concentrations of source and associated soil gas, best results are realized when the ratio of soil-gas measurements to actual subsurface concentrations remains as close to constant as the real world permits. It is the reliability and consistency of this ratio, not the particular units of mass (*e.g.*, nanograms) that determine usefulness. Thus, BEACON emphasizes the necessity of conducting — at minimum — follow-on intrusive sampling in areas that show relatively high soil-gas measurements to obtain corresponding concentrations of soil and groundwater contaminants. These correspondent values furnish the basis for approximating a relationship. For extrapolating passive soil gas results to vapor intrusion evaluations, we recommend a minimum of three passive soil gas locations be converted to a shallow vapor well then sampled using an active soil gas method. Once a relationship is established, it can be used in conjunction with the remaining soil-gas measurements to estimate subsurface contaminant concentrations across the survey field. (See www.beacon-usa.com/passivesoilgas.html, Publication 1: *Mass to Concentration Tie-In for PSG Surveys* and Publication 4: *Groundwater and PSG Correlation*.) It is important to keep in mind, however, that specific conditions at individual sample points, including soil porosity and permeability, depth to contamination, and perched ground water, can have an impact on soil-gas measurements at those locations.

When passive soil-gas surveys are utilized as described above, the data provide information that can yield substantial savings in drilling costs and in time. They furnish, among other things, a checklist of compounds expected at each survey location and help to determine how and where drilling budgets can most effectively be spent. Passive soil-gas surveys can also be used as a remediation or general site monitoring tool that can be implemented on a quarterly, semi-annual or annual basis.

Attachment 2

FIELD PROCEDURES FOR PASSIVE SOIL-GAS SURVEYS

The following field procedures are routinely used during a BEACON Passive Soil-Gas Survey. Modifications can be and are incorporated from time to time in response to individual project requirements. In all instances, BEACON adheres to EPA-approved Quality Assurance and Quality Control practices.

A. Field personnel carry a BESURE Sample Collection Kit™ and support equipment to the site and deploy the passive samplers in a prearranged survey pattern. A passive sampler consists of a borosilicate glass vial containing hydrophobic adsorbent cartridges with a length of wire attached to the vial for retrieval. Although samplers require only one person for emplacement and retrieval, the specific number of field personnel required depends upon the scope and schedule of the project. Each Sampler emplacement generally takes less than two minutes.

B. At each survey point a field technician clears vegetation as needed and, using a hammer drill with a 1″- to 1½″-diameter bit, creates a hole 12 to 14 inches deep. [Note: For locations covered with asphalt, concrete, or gravel surfacing, the field technician drills a 1″- to 1½″-diameter hole through the surfacing to the soils beneath]. The technician then, using a hammer drill with a ½″ diameter bit, creates a hole three-feet deep. The hole is then sleeved with a 1″-diameter metal sleeve.

C. The technician then removes the solid plastic cap from a sampler and replaces it with a Sampling Cap (a plastic cap with a hole covered by screen meshing). The technician inserts the sampler, with the Sampling Cap end facing down, into the hole (**see attached figure**). The sampler is then covered with an aluminum foil plug and soils for uncapped locations or, for capped locations, an aluminum foil plug and a concrete patch. The sampler's location, time and date of emplacement, and other relevant information are recorded on the Field Deployment Form.

D. One or more trip blanks are included as part of the quality-control procedures.

E. Once all the samplers have been deployed, field personnel schedule sampler recovery and depart, taking all other equipment and materials with them.

F. Field personnel retrieve the samplers at the end of the exposure period. At each location, a field technician withdraws the sampler from its hole, removes the retrieval wire, and wipes the outside of the vial clean using gauze cloth; following removal of the Sampling Cap, the threads of the vial are also cleaned. A solid plastic cap is screwed onto the vial and the sample location number is written on the label. The technician then records sample-point location, date, time, etc. on the Field Deployment Form.

G. Sampling holes are refilled with soil, sand, or other suitable material. If samplers have been installed through asphalt or concrete, the hole is filled to grade with a plug of cold patch or cement.

H. Following retrieval, field personnel ship or transport the passive samplers to BEACON's laboratory.

BEACON'S PASSIVE SOIL-GAS SAMPLER

DEPLOYMENT THROUGH SOILS

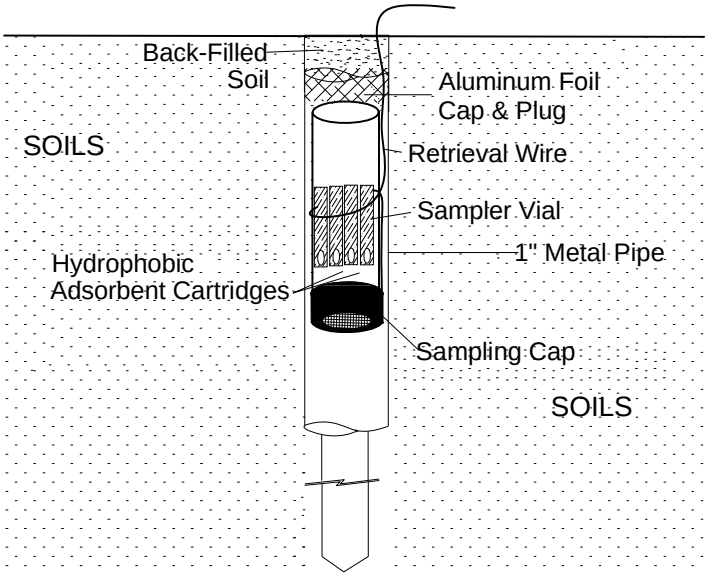

DEPLOYMENT THROUGH AN ASPHALT/CONCRETE CAP

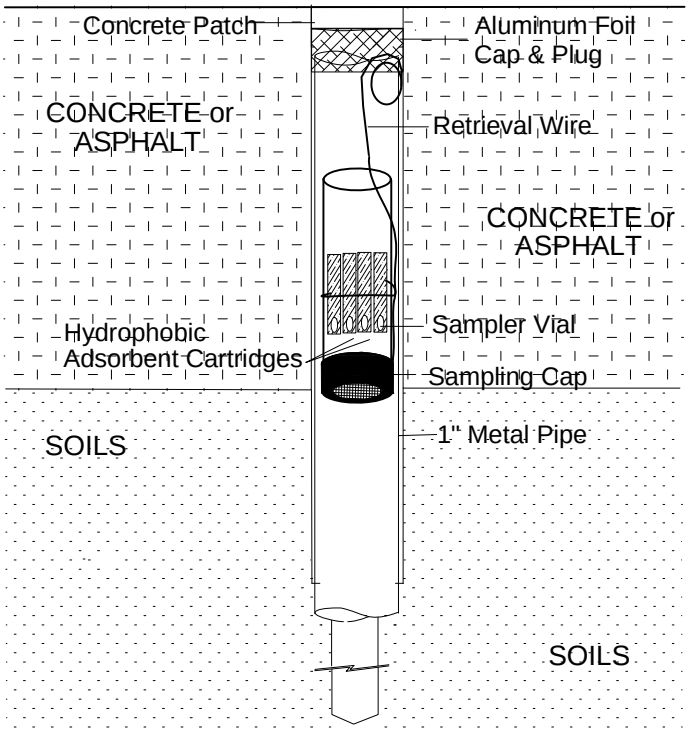

Attachment 3

Chain of Custody Form

Shipped via FedEx overnight

BEACON ENVIRONMENTAL SERVICES, INC.

CHAIN-OF-CUSTODY
PASSIVE SOIL-GAS SAMPLES

2203A Commerce Road, Suite 1
Forest Hill, MD 21050 USA
P: 1-410-838-8780 | F: 1-410-838-8740

Project Information		Client Information		
Beacon Project No.:	2962	Company Name:	TETRA TECH, Inc.	Client PO No.:
Site Name:	Nockamixon TCE Site	Office Location:	King of Prussia, PA 19406	
Site Location:	Nockamixon Twp. Bucks Co, PA	Samples Submitted By:	N. Dolic	Expedited Turnaround Time
Analytical Method:	U.S. EPA Method 8260C	Contact Phone No.:	610 842-4756	☐ Rush (Specify): ____ days
Target Compounds:				

Field Sample ID	Date Emplaced / Time Emplaced	Date Retrieved / Time Retrieved	Sampling Hole Depth (inches)	Type of Surface (Soil/Asphalt/ Concrete/Gravel)	Optional Sample Information (e.g., Description of Sample Location, Sample Condition, PID/FID Readings)
	5-7-15				
Trip-1					
Trip-2					
Trip-3					
MW3-550	0945	0910	32	Soil	5-27-15
MW3-600	10:10	0950	36	↓	5-27-15
MW3-800	10:02	0945	36	↓	5-27-15 (DUP-PSG-02)
MW3-900	09:58	0940	36	↓	5-27-15
X-550	10:16	1000	32	↓	5-27-15
X-700	09:50	0930	36	↓	5-27-15
W-850	09:55	0917	36	↓	5-27-15
B_Rd-550	10:23	1005	30	↓	5-27-15
B_Rd-400	10:28	1020	32	↓	5-27-15
B_Rd-200	10:32	1037	30	↓	5-27-15
B_Rd-100	10:36	1033	30	↓	5-27-15
B_Rd-0	10:42	1040	30	↓	5-27-15

Special Notes/Instructions: Duplicate pair MW3-800 and DUP-PSG-02

Shipment of Field Kit to Laboratory — Custody Seal # 3850994 **Intact? Y N**

Relinquished by:	Date/Time	Courier	Received by:	Date/Time
[illegible]	5-28-15 / 1630	FedEx	Kenny Ipencho	05-29-15 / 1134 hrs

BEACON ENVIRONMENTAL SERVICES, INC.

CHAIN-OF-CUSTODY
PASSIVE SOIL-GAS SAMPLES

2203A Commerce Road, Suite 1
Forest Hill, MD 21050 USA
P: 1-410-838-8780 | F: 1-410-838-8740

Project Information		Client Information		
Beacon Project No.:	2962	Company Name:	TETRA TECH, Inc.	Client PO No.:
Site Name:	Nockamixon TCE Site	Office Location:	King of Prussia PA 19406	
Site Location:	Nockamixon Twp.	Samples Submitted By:	N. Dedic	Expedited Turnaround Time
Analytical Method:	U.S. EPA Method 8260C	Contact Phone No.:	610-842-4756	☐ Rush (Specify): ____ days
Target Compounds:				

Field Sample ID	Date Emplaced / Time Emplaced	Date Retrieved / Time Retrieved	Sampling Hole Depth (inches)	Type of Surface (Soil/Asphalt/ Concrete/Gravel)	Optional Sample Information (e.g., Description of Sample Location, Sample Condition, PID/FID Readings)
	5-7-15				
A-50	10:45	1030	32	Soil	5-27-15
B-100	10:49	1055	32		5-27-15 (DUP-PSG-04)
C-0	10:52	1048	32		Bottom - wet 5-27-15
B-0	10:55	1044	32		Wet from 2' down 5-27-15
C-50	11:00	1052	36		Wet from 2.5' 5-27-15
D-0	11:08	0911	32		5-26-15
E-50	11:17	0907	36		5-28-15
F-0	11:20	0902	36		5-28-15
D-100	11:23	0915	30		5-28-15
F-100	11:28	0855	36		5-28-15
E-150	11:33	0918	36		5-28-15
F-200	11:38	0921	30		5-28-15
D-200	11:42	0925	30		5-28-15
C-150	11:46	1100	30		5-27-15
B-200	11:58	1105	30		5-27-15

Special Notes/Instructions: Duplicate pair B-100 and DUP-PSG-04

Shipment of Field Kit to Laboratory — Custody Seal # 3850994 **Intact? Y N**

Relinquished by:	Date/Time	Courier	Received by:	Date/Time
Neil Dedic	5-28-15 / 1630	FedEx	Kenny Ifeacho	05-29-15 / 1134 hrs

BEACON ENVIRONMENTAL SERVICES, INC.

CHAIN-OF-CUSTODY
PASSIVE SOIL-GAS SAMPLES

2203A Commerce Road, Suite 1
Forest Hill, MD 21050 USA
P: 1-410-838-8780 | F: 1-410-838-8740

Project Information		Client Information		
Beacon Project No.:	2962	Company Name:	TETRATECH, Inc.	Client PO No.:
Site Name:	NOCKAMIXON TCE Site	Office Location:	King of Prussia, PA 19406	
Site Location:	Nockamixon Twp. Bucks Co, PA	Samples Submitted By:	N. Dedic	Expedited Turnaround Time
Analytical Method:	U.S. EPA Method 8260C	Contact Phone No.:	610 842-4756	☐ Rush (Specify): ___ days
Target Compounds:				

Field Sample ID	Date Emplaced / Time Emplaced	Date Retrieved / Time Retrieved	Sampling Hole Depth (inches)	Type of Surface (Soil/Asphalt/ Concrete/Gravel)	Optional Sample Information (e.g., Description of Sample Location, Sample Condition, PID/FID Readings)
A-150	5-7-15 / 11:53	1027	36	Soil	5-27-15
B-300	12:02	1115	36	↓	5-27-15
A-350	12:07	1023	36	↓	5-27-15
E-250	14:16	0952	30	↓	5-28-17
D-300	14:20	0955	30	↓	5-28-17
D-250	14:24	0948	30	↓	5-28-15
D-350	14:28	1020	30	↓	5-28-15
E-300	14:32	0958	30	↓	5-28-15
D_e-275	14:35	1002	30	↓	5-28-15
D_e-325	14:38	1018	30	↓	5-28-15
E-350	14:41	1015	30	↓	5-28-15
E-400	14:50	1027	30	↓	5-28-15 (DUP-PSG-03)
~~E-450~~	14:53	NA	30	↓	5-28-15 PSG bottle missing
E-500	15:00	1058	30	↓	5-28-15
E-600	15:05	1102	32	↓	5-28-15

EMPTY Vial KAT

Not Received KAT

Special Notes/Instructions: Duplicate pair E-450 and DUP-PSG-03

Shipment of Field Kit to Laboratory — Custody Seal # 3850994 **Intact?** Ⓨ N

Relinquished by:	Date/Time	Courier	Received by:	Date/Time
Neil Dedic	5-28-15/1630	FedEx	Kenny Tipacho	05-29-15/1134 hrs

BEACON ENVIRONMENTAL SERVICES, INC.

CHAIN-OF-CUSTODY
PASSIVE SOIL-GAS SAMPLES

2203A Commerce Road, Suite 1
Forest Hill, MD 21050 USA
P: 1-410-838-8780 | F: 1-410-838-8740

Project Information		Client Information		
Beacon Project No.:	2962	Company Name:	TETRA TECH, INC	Client PO No.:
Site Name:	Nockamixon TCE Site	Office Location:	King of Prussia, PA 19406	
Site Location:	Nockamixon Twp, Bucks Co, PA	Samples Submitted By:	N. Dedic	Expedited Turnaround Time
Analytical Method:	U.S. EPA Method 8260C	Contact Phone No.:	610 842-4756	☐ Rush (Specify): ___ days
Target Compounds:				

Field Sample ID	Date Emplaced 5-7-15 / Time Emplaced	Date Retrieved / Time Retrieved	Sampling Hole Depth (inches)	Type of Surface (Soil/Asphalt/ Concrete/Gravel)	Optional Sample Information (e.g., Description of Sample Location, Sample Condition, PID/FID Readings)
E-550	15:10	NA	30	soil	
F-650	15:14	1445	32	↓	5-27-15
F-750	15:25	1425	32	↓	5-27-15
F-700	15:28	1435	32	↓	5-27-15
F-850	15:35	1420	36	↓	5-27-15 (PSG sample found at surface/Pull-out)
E-800	15:42	1410	32	↓	5-27-15
E-700	15:50	1430	36	↓	5-27-15
E-650	15:58	1448	32	↓	5-27-15
F-600	16:05	1105	34	↓	5-28-15
F-550	16:10	1110	30	↓	5-28-15
E-F-525	16:13	1115	30	↓	5-28-15
F-500	16:16	1042	30	↓	5-28-15
F-400	16:22	1120	24	↓	Rock/stone pcs ~2' 5-28-15
F-350	16:28	1125	24	✓	Rock/stone pcs ~2' 5-28-15

Special Notes/Instructions:

Shipment of Field Kit to Laboratory — Custody Seal # 3850994 **Intact? Y N**

Relinquished by:	Date/Time	Courier	Received by:	Date/Time
Nick Dedic	5-28-15 / 1630	Fed Ex	Kenny Ifeacho	05-29-15 / 1134am

BEACON ENVIRONMENTAL SERVICES, INC.
2203A Commerce Road, Suite 1
Forest Hill, MD 21050 USA
P: 1-410-838-8780 | F: 1-410-838-8740

CHAIN-OF-CUSTODY
PASSIVE SOIL-GAS SAMPLES

Project Information		Client Information		
Beacon Project No.:	2962	Company Name:	TETRA TECH, Inc.	Client PO No.:
Site Name:	Nockamixon TCE Site	Office Location:	King of Prussia, PA 19406	
Site Location:	Nockamixon Twp., Bucks Co., PA	Samples Submitted By:	N. Dedic	Expedited Turnaround Time
Analytical Method:	U.S. EPA Method 8260C	Contact Phone No.:	610 842-4756	☐ Rush (Specify): ____ days
Target Compounds:				

Field Sample ID	Date Emplaced / Time Emplaced	Date Retrieved / Time Retrieved	Sampling Hole Depth (inches)	Type of Surface (Soil/Asphalt/ Concrete/Gravel)	Optional Sample Information (e.g., Description of Sample Location, Sample Condition, PID/FID Readings)
	5-8-2015				
G-200	09:40	0937	30	Soil	below 1.5' - wet 5-28-15
F-250	09:47	0930	34		2' - rock pieces 5-28-15
F-300	09:51	1130	30		5-28-15
E/F-325	09:54	1010	24		~~rock pieces~~ 5-28-15
E/F-400	10:00	1037	18		rock pieces 5-28-15
D/E-475	10:07	1045	30		5-28-15
D-450	10:11	1050	18		5-28-15
D-500	10:15	1053	30		5-28-15
D-550	10:19	1520	30		5-27-15
D/E-525	10:25	1512	30		5-27-15
D-600	10:30	1508	36		5-27-15
C-550	10:33	1140	30		5-27-15
C-650	10:37	1150	32		5-27-15
D-650	10:39	1453	36		5-27-15
C-700	10:43	1505	36		5-27-15 (little water in sample bottle)

Special Notes/Instructions:

Shipment of Field Kit to Laboratory — Custody Seal # 3850994 **Intact? Y N**

Relinquished by:	Date/Time	Courier	Received by:	Date/Time
[illegible]	5-28-15 / 1630	FedEx	Kenny Dj[illegible]	05-29-15 / 1134 hrs

BEACON ENVIRONMENTAL SERVICES, INC.

CHAIN-OF-CUSTODY
PASSIVE SOIL-GAS SAMPLES

2203A Commerce Road, Suite 1
Forest Hill, MD 21050 USA
P: 1-410-838-8780 | F: 1-410-838-8740

Project Information		Client Information		
Beacon Project No.:	2962	Company Name:	TETRA TECH, Inc.	Client PO No.:
Site Name:	NOCKAMIXON TCE Site	Office Location:	King of Prussia, PA 19406	
Site Location:	Nockamixon Twp., Bucks Co, PA	Samples Submitted By:	N. Bedic	Expedited Turnaround Time
Analytical Method:	U.S. EPA Method 8260C	Contact Phone No.:	610 842-4756	☐ Rush (Specify): ____ days
Target Compounds:				

Field Sample ID	Date Emplaced / Time Emplaced	Date Retrieved / Time Retrieved	Sampling Hole Depth (inches)	Type of Surface (Soil/Asphalt/ Concrete/Gravel)	Optional Sample Information (e.g., Description of Sample Location, Sample Condition, PID/FID Readings)
	5-8-2015				
C-750	10:50	1205	36	Soil	5-27-15
D-700	10:53	1458	36		5-27-15
D-800	10:57	1415	36		1.5' below-wet 5-27-15
D-850	11:02	1405	36		1.5' below-wet 5-27-15
D-900	11:05	~~1230~~ 1400	36		5-27-15
C-900	11:10	1220	24		Rocky 5-27-15 (DUP-PSG-01)
~~D-1000~~	~~11:13~~				
C-950	11:13	1225	36	Soil	5-27-15
D-1000	11:18	1353	36		1.5' below-wet 5-27-15
B-1000	11:23	1230	36		very moist surface 5-27-15
B-900	11:30	1215	36		very moist surface <1.5' 5-27-15
A-850	11:35	1235	36		5-27-15
B-800	11:38	1210	36		5-27-15
B-700	11:42	1158	36		5-27-15
A-700	11:47	1245	36		5-27-15

Special Notes/Instructions: Duplicate pair C-900 and DUP-PSG-01

Shipment of Field Kit to Laboratory — Custody Seal # 3850994 **Intact? Y N**

Relinquished by:	Date/Time	Courier	Received by:	Date/Time
[illegible]	5-28-15 / 1630	FedEx	Kenny Deacko	05-29-15 / 1134 ms

BEACON ENVIRONMENTAL SERVICES, INC.

CHAIN-OF-CUSTODY
PASSIVE SOIL-GAS SAMPLES

2203A Commerce Road, Suite 1
Forest Hill, MD 21050 USA
P: 1-410-838-8780 | F: 1-410-838-8740

Project Information		Client Information		
Beacon Project No.:	2962	Company Name:	TETRA TECH, INC.	Client PO No.:
Site Name:	NOCKAMIXON TCE Site	Office Location:	King of Prussia, PA 19406	
Site Location:	NOCKAMIXON Twp., Bucks Co., PA	Samples Submitted By:	N. Deckic	Expedited Turnaround Time
Analytical Method:	U.S. EPA Method 8260C	Contact Phone No.:	610 342-4756	☐ Rush (Specify): ___ days
Target Compounds:				

Field Sample ID	Date Emplaced / Time Emplaced	Date Retrieved / Time Retrieved	Sampling Hole Depth (inches)	Type of Surface (Soil/Asphalt/ Concrete/Gravel)	Optional Sample Information (e.g., Description of Sample Location, Sample Condition, PID/FID Readings)
	5-8-2015				
BRd-700	12:25	1327	36	Soil	* 5-27-15 (PSG sample found at surface/pull-out)
B Rd-800	12:30	1332	36		* 5-27-15 (PSG sample found at surface/pull-out)
BRd-850	12:33	1337	36		1' - water 5-27-15
BRd-900	12:36	1345	36		5-27-15
A-650	12:41	1250	36		5-27-15
A-550	12:45	1010	30		5-27-15
B-600	12:48	1143	30		5-27-15
B-500	13:00	1148	30		5-27-15
A-450	13:05	1013	36		5-27-15
B-400	13:08	1123	30		5-27-15
C-450	13:11	1127	30		5-27-15
C-350	13:15	1120	30		5-27-15
C-250	13:18	1110	24		2' - Rocks 5-27-15
B-50	13:30	1145	36		5-28-15
C-100	13:33	1525	30		30" - Rocks or Bedrock?, 15" - water 5-27-15

Special Notes/Instructions:

Shipment of Field Kit to Laboratory — Custody Seal # 3850994 **Intact? Y N**

Relinquished by:	Date/Time	Courier	Received by:	Date/Time
Neil Redick	5-28-15/1630	FedEx	Kenny Ifeacho	05-29-15/1134 hrs

BEACON ENVIRONMENTAL SERVICES, INC.

CHAIN-OF-CUSTODY
PASSIVE SOIL-GAS SAMPLES

2203A Commerce Road, Suite 1
Forest Hill, MD 21050 USA
P: 1-410-838-8780 | F: 1-410-838-8740

Project Information		Client Information		
Beacon Project No.:	2962	Company Name:	TETRA TECH, INC.	Client PO No.:
Site Name:	NOCKAMIXON TCE SITE	Office Location:	King of Prussia, PA 19406	
Site Location:	NOCKAMIXON TWP, BUCKS CO., PA	Samples Submitted By:		Expedited Turnaround Time
Analytical Method:	U.S. EPA Method 8260C	Contact Phone No.:		☐ Rush (Specify): ____ days
Target Compounds:				

Field Sample ID	Date Emplaced / Time Emplaced	Date Retrieved / Time Retrieved	Sampling Hole Depth (inches)	Type of Surface (Soil/Asphalt/ Concrete/Gravel)	Optional Sample Information (e.g., Description of Sample Location, Sample Condition, PID/FID Readings)
	5-8-2015				
X-850	13:45	0925	36	Soil	5-27-15
W-750	13:48	0934	36	↓	5-27-15
W-650	13:50	0915	36	↓	5-27-15

Special Notes/Instructions:

Shipment of Field Kit to Laboratory — Custody Seal # 3850994 **Intact? Y N**

Relinquished by:	Date/Time	Courier	Received by:	Date/Time
Neil Redler	5-28-15 / 1630	FedEx	Kenny Tfeacho	05-29-15 / 1134 hrs

Attachment 4

LABORATORY PROCEDURES FOR PASSIVE SOIL-GAS SAMPLES

Following are laboratory procedures used with BEACON Passive Soil-Gas Surveys, a screening technology for expedited site investigation. After exposure, adsorbent cartridges from the passive samplers are analyzed using U.S. EPA Method 8260C as a guidance document, a capillary gas chromatographic/mass spectrometric method, modified to accommodate high temperature thermal desorption of the adsorbent cartridges and to meet the objectives of reporting semi-quantitative data. This procedure is summarized as follows:

A. The adsorbent cartridges are loaded with internal standards and surrogates prior to loading the autosampler with the cartridges. The loaded cartridges are purged in a helium flow. Then the cartridges are thermally desorbed in a helium flow onto a focusing trap. Any analytes in the helium stream are adsorbed onto a focusing trap.

B. Following trap focusing, the trap is thermally desorbed onto a Rxi-624Sil MS 20m, 0.18 mm ID, 1.00 micron filament thickness capillary column.

C. The GC/MS is scanned between 35 and 270 Atomic Mass Units (AMU) at 3.12 scans per second.

D. BFB tuning criteria and the initial five-point calibration procedures are those stated in method SW846-8260C. System performance and calibration check criteria are met prior to analysis of samples. A laboratory method blank is analyzed after the daily standard to determine that the system is contaminant-free.

E. The instrumentation used for these analyses includes:

- Agilent 6890-5973a Gas Chromatograph/Mass Spectrometer;
- Markes Unity thermal desorber;
- Markes UltrA autosampler; and
- Markes Mass Flow Controller Modules

- Agilent 7890-5975c Gas Chromatograph/Mass Spectrometer;
- Markes Unity2 thermal desorber;
- Markes UltrA2 autosampler; and
- Markes Mass Flow Controller Modules.