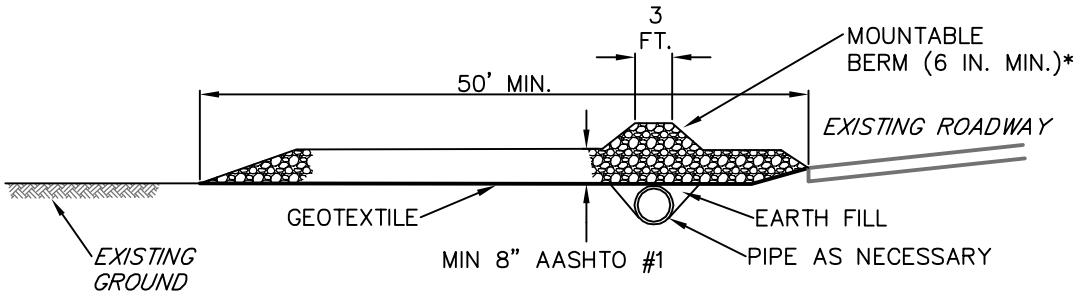

PROFILE

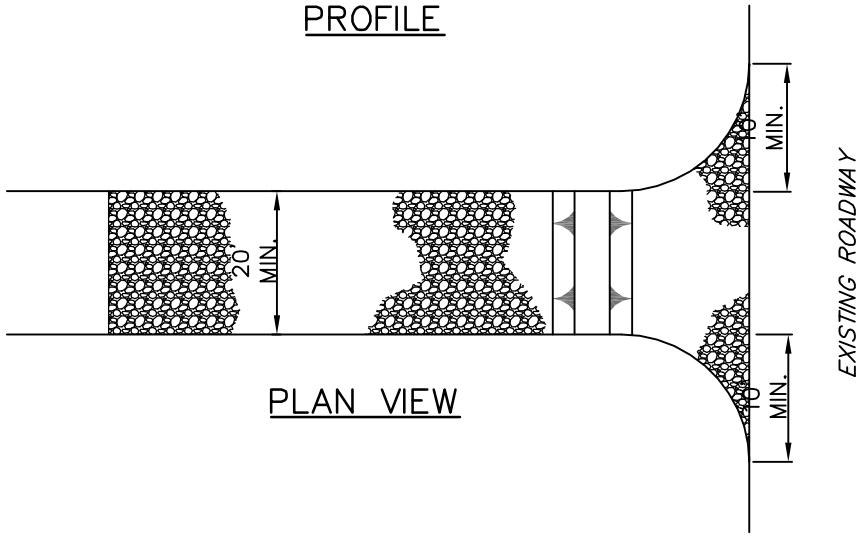

PLAN VIEW

* MOUNTABLE BERM USED TO PROVIDE PROPER COVER FOR PIPE

NOTES:

REMOVE TOPSOIL PRIOR TO INSTALLATION OF ROCK CONSTRUCTION ENTRANCE. EXTEND ROCK OVER FULL WIDTH OF ENTRANCE.

RUNOFF SHALL BE DIVERTED FROM ROADWAY TO A SUITABLE SEDIMENT REMOVAL BMP PRIOR TO ENTERING ROCK CONSTRUCTION ENTRANCE.

MOUNTABLE BERM SHALL BE INSTALLED WHEREVER OPTIONAL CULVERT PIPE IS USED AND PROPER PIPE COVER AS SPECIFIED BY MANUFACTURER IS NOT OTHERWISE PROVIDED. PIPE SHALL BE SIZED APPROPRIATELY FOR SIZE OF DITCH BEING CROSSED.

MAINTENANCE: ROCK CONSTRUCTION ENTRANCE THICKNESS SHALL BE CONSTANTLY MAINTAINED TO THE SPECIFIED DIMENSIONS BY ADDING ROCK. A STOCKPILE SHALL BE MAINTAINED ON SITE FOR THIS PURPOSE. ALL SEDIMENT DEPOSITED ON PAVED ROADWAYS SHALL BE REMOVED AND RETURNED TO THE CONSTRUCTION SITE IMMEDIATELY. IF EXCESSIVE AMOUNTS OF SEDIMENT ARE BEING DEPOSITED ON ROADWAY, EXTEND LENGTH OF ROCK CONSTRUCTION ENTRANCE BY 50 FOOT INCREMENTS UNTIL CONDITION IS ALLEVIATED OR INSTALL WASH RACK. WASHING THE ROADWAY OR SWEEPING THE DEPOSITS INTO ROADWAY DITCHES, SEWERS, CULVERTS, OR OTHER DRAINAGE COURSES IS NOT ACCEPTABLE.

STANDARD CONSTRUCTION DETAIL #3-1
ROCK CONSTRUCTION ENTRANCE

NOT TO SCALE

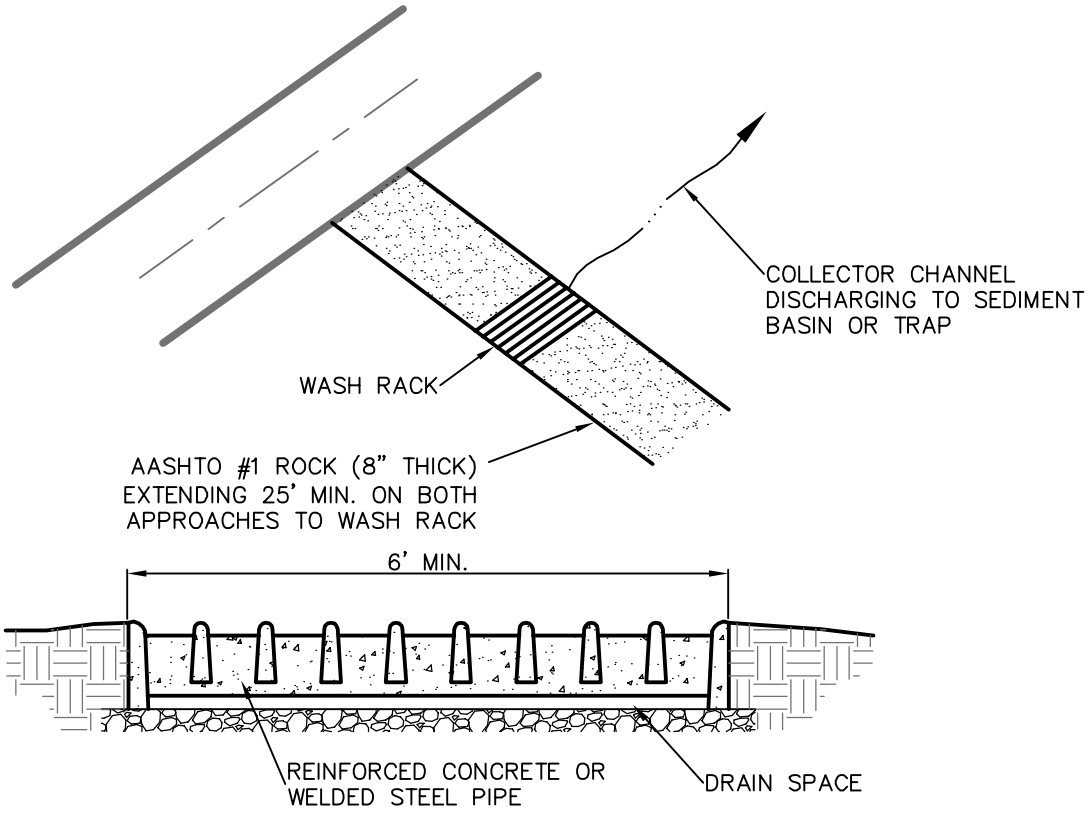

NOTES:

WASH RACK SHALL BE 20 FEET (MIN.) WIDE OR TOTAL WIDTH OF ACCESS.

WASH RACK SHALL BE DESIGNED AND CONSTRUCTED TO ACCOMMODATE ANTICIPATED CONSTRUCTION VEHICULAR TRAFFIC.

A WATER SUPPLY SHALL BE MADE AVAILABLE TO WASH THE WHEELS OF ALL VEHICLES EXITING THE SITE.

MAINTENANCE: ROCK CONSTRUCTION ENTRANCE THICKNESS SHALL BE CONSTANTLY MAINTAINED TO THE SPECIFIED DIMENSIONS BY ADDING ROCK. A STOCKPILE OF ROCK MATERIAL SHALL BE MAINTAINED ON SITE FOR THIS PURPOSE. DRAIN SPACE UNDER WASH RACK SHALL BE KEPT OPEN AT ALL TIMES. DAMAGE TO THE WASH RACK SHALL BE REPAIRED PRIOR TO FURTHER USE OF THE RACK. ALL SEDIMENT DEPOSITED ON ROADWAYS SHALL BE REMOVED AND RETURNED TO THE CONSTRUCTION SITE IMMEDIATELY. WASHING THE ROADWAY OR SWEEPING THE DEPOSITS INTO ROADWAY DITCHES, SEWERS, CULVERTS, OR OTHER DRAINAGE COURSES IS NOT ACCEPTABLE.

STANDARD CONSTRUCTION DETAIL #3-2
ROCK CONSTRUCTION ACCESS WITH WASH RACK

NOT TO SCALE

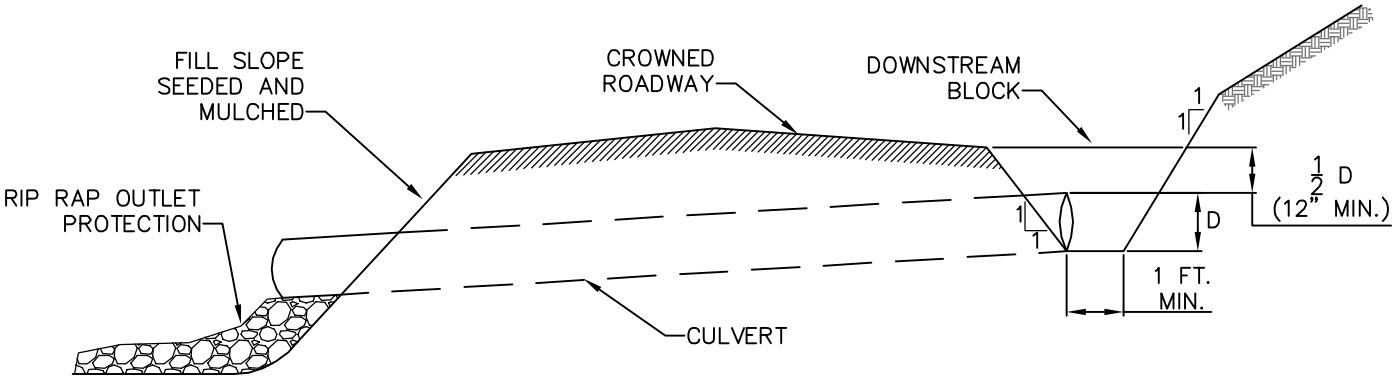

SECTION VIEW

NOTES:

CUT AND FILL SLOPES SHALL BE STABILIZED IMMEDIATELY UPON COMPLETION OF ROADWAY GRADING. THESE AREAS SHALL BE BLANKETED WHEREVER THEY ARE LOCATED WITHIN 50 FEET OF A SURFACE WATER OR WITHIN 100 FEET OF AN HQ OR EV SURFACE WATER OR WHERE A SUITABLE VEGETATIVE FILTER STRIP DOES NOT EXIST.

A TOP DRESSING COMPOSED OF HARD, DURABLE STONE SHALL BE PROVIDED FOR SOILS HAVING LOW STRENGTH.

ROADSIDE DITCHES SHALL BE PROVIDED WITH ADEQUATE PROTECTIVE LINING WHEREVER RUNOFF CANNOT SHEET FLOW AWAY FROM THE ROADWAY.

ADEQUATELY SIZED CULVERTS OR OTHER SUITABLE CROSS DRAINS SHALL BE PROVIDED AT ALL SEEPS, SPRINGS, AND DRAINAGE COURSES. DITCH RELIEF CULVERTS OR TURNOUTS SHALL BE PROVIDED AT THE INTERVALS INDICATED ON TABLE 3.3 OR TABLE 3.4 OF THE PA DEP EROSION CONTROL MANUAL FOR ROADSIDE DITCHES. RIPRAP OUTLET PROTECTION TO BE SIZED ACCORDING TO ANTICIPATED DISCHARGE VELOCITY.

ROADWAY SHALL BE INSPECTED WEEKLY AND AFTER EACH RUNOFF EVENT. DAMAGED ROADWAYS, DITCHES, OR CROSS DRAINS SHALL BE REPAIRED IMMEDIATELY.

STANDARD CONSTRUCTION DETAIL #3-3
CROWNED ROADWAY

NOT TO SCALE

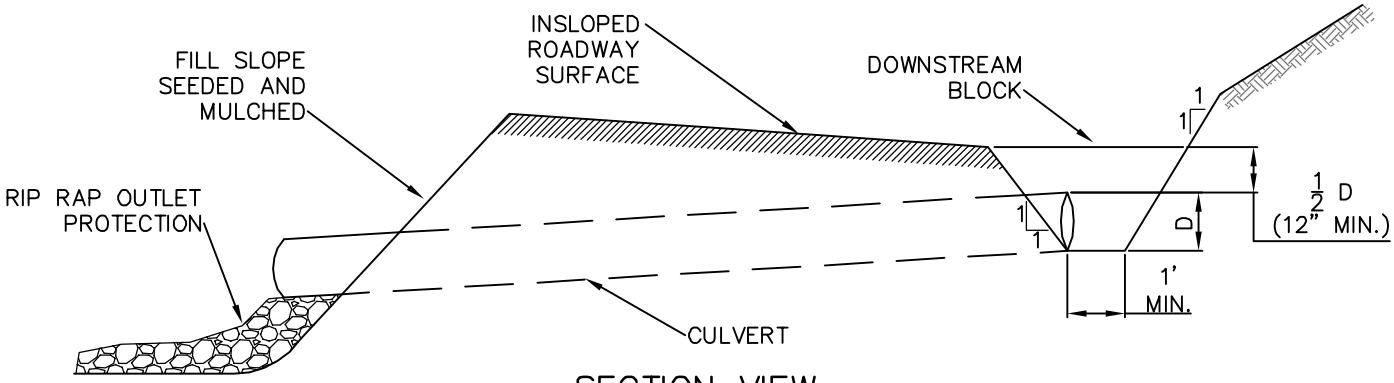

SECTION VIEW

NOTES:

CUT AND FILL SLOPES SHALL BE STABILIZED IMMEDIATELY UPON COMPLETION OF ROADWAY GRADING. THESE AREAS SHALL BE BLANKETED WHEREVER THEY ARE LOCATED WITHIN 50 FEET OF A SURFACE WATER OR WITHIN 100 FEET OF AN HQ OR EV SURFACE WATER OR WHERE A SUITABLE VEGETATIVE FILTER STRIP DOES NOT EXIST.

A TOP DRESSING COMPOSED OF HARD, DURABLE STONE SHALL BE PROVIDED FOR SOILS HAVING LOW STRENGTH.

ROADSIDE DITCHES SHALL BE PROVIDED WITH ADEQUATE PROTECTIVE LINING.

ADEQUATELY SIZED CULVERTS OR OTHER SUITABLE CROSS DRAINS SHALL BE PROVIDED AT ALL SEEPS, SPRINGS, AND DRAINAGE COURSES. DITCH RELIEF CULVERTS SHALL BE PROVIDED AT THE INTERVALS INDICATED ON TABLE 3.3 OR TABLE 3.4 OF THE PA DEP EROSION CONTROL MANUAL. RIPRAP OUTLET PROTECTION TO BE SIZED ACCORDING TO ANTICIPATED DISCHARGE VELOCITY.

ROADWAY SHALL BE INSPECTED WEEKLY AND AFTER EACH RUNOFF EVENT. DAMAGED ROADWAYS, DITCHES, OR CROSS DRAINS SHALL BE REPAIRED IMMEDIATELY.

STANDARD CONSTRUCTION DETAIL #3-4
INSLOPED ROADWAY

NOT TO SCALE

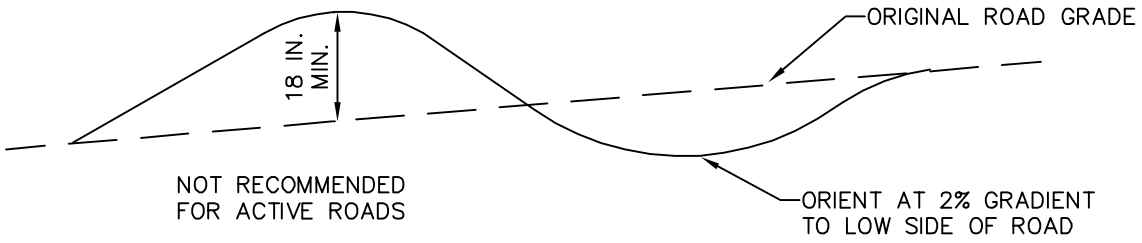

SECTION VIEW

NOTES:

WATERBARS SHALL DISCHARGE TO A STABLE AREA.

WATERBARS SHALL BE INSPECTED WEEKLY (DAILY ON ACTIVE ROADS) AND AFTER EACH RUNOFF EVENT. DAMAGED OR ERODED WATERBARS SHALL BE RESTORED TO ORIGINAL DIMENSIONS WITHIN 24 HOURS OF INSPECTION.

MAINTENANCE OF WATERBARS SHALL BE PROVIDED UNTIL ROADWAY, SKIDTRAIL, OR RIGHT–OF–WAY HAS ACHIEVED PERMANENT STABILIZATION.

WATERBARS ON RETIRED ROADWAYS, SKIDTRAILS, AND RIGHT–OF–WAYS SHALL BE LEFT IN PLACE AFTER PERMANENT STABILIZATION HAS BEEN ACHIEVED.

SEE PA DEP EROSION CONTROL MANUAL TABLE 3.1 FOR WATERBAR SPACING.

STANDARD CONSTRUCTION DETAIL #3-5
WATERBAR

NOT TO SCALE

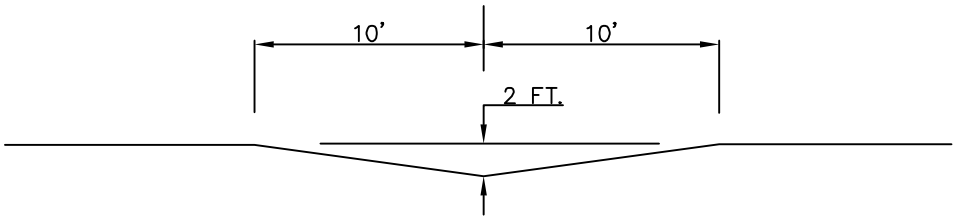

PROFILE

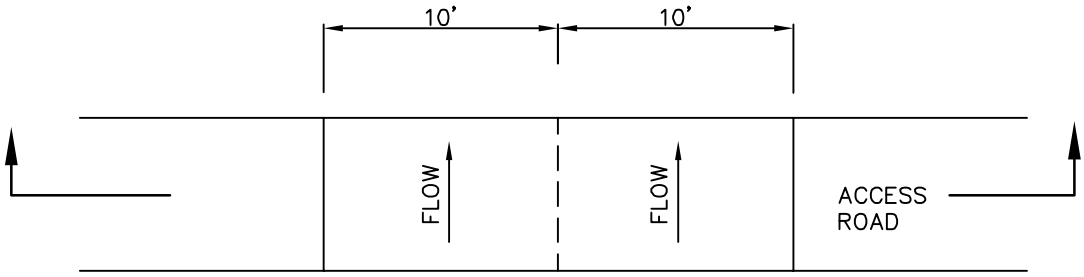

PLAN

NOTES:

BROAD–BASED DIPS SHALL BE CONSTRUCTED TO THE DIMENSIONS SHOWN AND AT THE LOCATIONS SHOWN ON THE PLAN DRAWINGS.

DIPS SHALL BE ORIENTED SO AS TO DISCHARGE TO THE LOW SIDE OF THE ROADWAY.

DIPS SHALL BE INSPECTED DAILY. DAMAGED OR NON–FUNCTIONING DIPS SHALL BE REPAIRED BY THE END OF THE WORKDAY.

MAXIMUM SPACING OF BROAD–BASED DIPS SHALL BE AS SHOWN IN TABLE 3.2 OF THE PA DEP EROSION CONTROL MANUAL.

STANDARD CONSTRUCTION DETAIL #3-6
BROAD BASED DIP - LOW GRADIENT (< 5 %) ROADWAYS

NOT TO SCALE

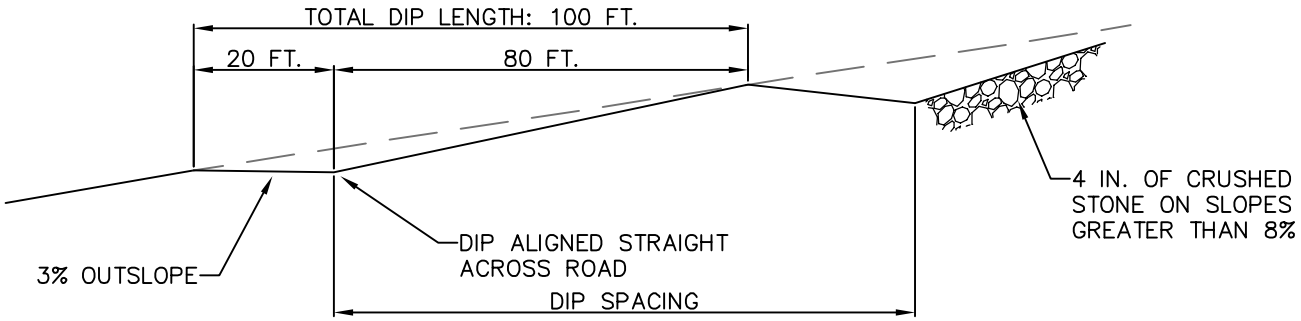

MINIMUM DEPTH=12 IN.

PROFILE VIEW

NOTES:

BROAD–BASED DIPS SHALL BE CONSTRUCTED TO THE DIMENSIONS SHOWN AND AT THE LOCATIONS SHOWN ON THE PLAN DRAWINGS.

DIPS SHALL BE ORIENTED SO AS TO DISCHARGE TO THE LOW SIDE OF THE ROADWAY.

DIPS SHALL BE INSPECTED DAILY. DAMAGED OR NON–FUNCTIONING DIPS SHALL BE REPAIRED BY THE END OF THE WORKDAY.

MAXIMUM SPACING OF BROAD–BASED DIPS SHALL BE AS SHOWN IN TABLE 3.2 OF THE PA DEP EROSION CONTROL MANUAL.

STANDARD CONSTRUCTION DETAIL #3-7
BROAD BASED DIP FOR HIGH GRADIENT (5%-10%) ROADWAYS

NOT TO SCALE

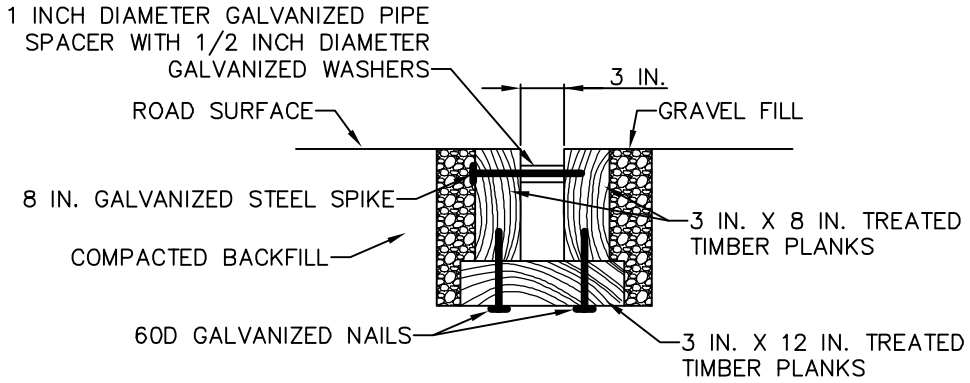

TYPICAL CROSS-SECTION

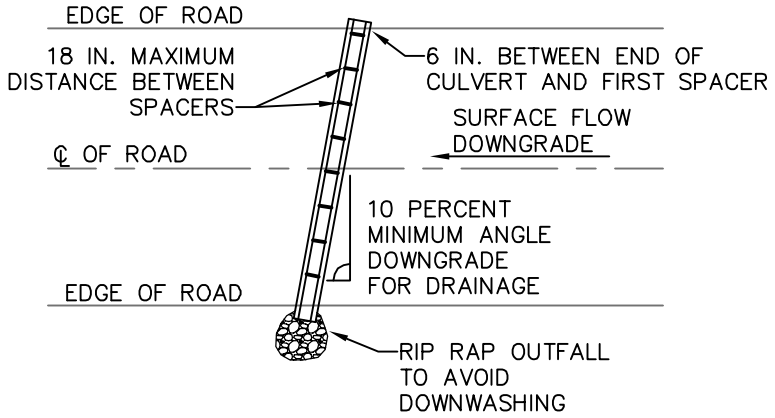

TYPICAL PLAN VIEW

NOTES:

CULVERTS SHALL BE INSPECTED WEEKLY AND AFTER RUNOFF EVENTS.

DAMAGED OR NON-FUNCTIONING CULVERTS SHALL BE REPAIRED BY THE END OF THE WORKDAY.

ACCUMULATED SEDIMENT SHALL BE REMOVED WITHIN 24 HOURS OF INSPECTION.

MAXIMUM SPACING OF OPEN-TOP CULVERTS SHALL BE AS SHOWN IN TABLE 3.2 OF THE PA DEP EROSION CONTROL MANUAL.

STANDARD CONSTRUCTION DETAIL #3-8
OPEN TOP CULVERT

NOT TO SCALE

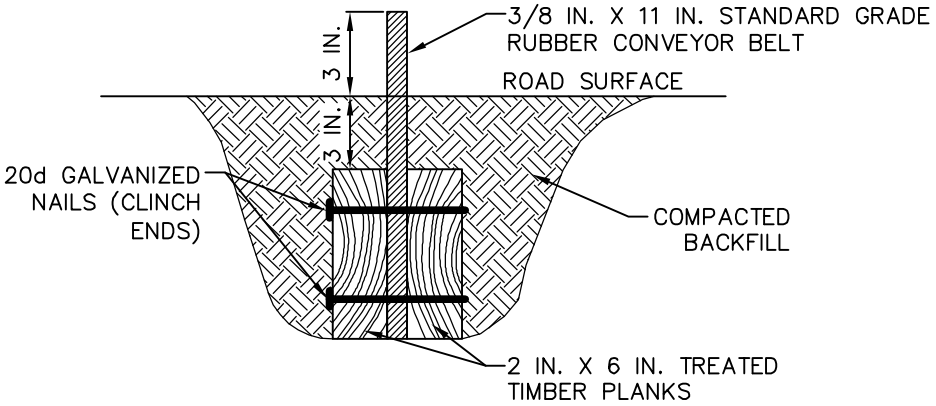

TYPICAL CROSS–SECTION

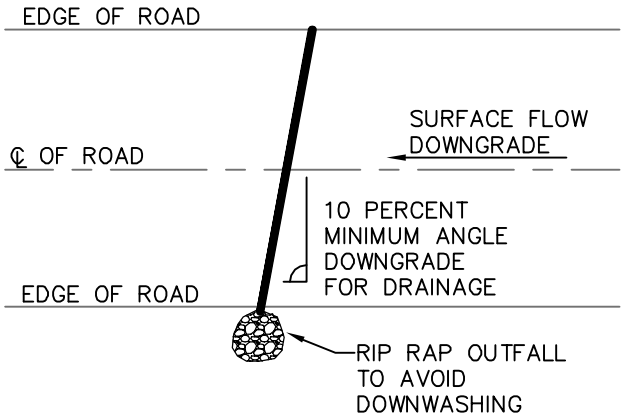

TYPICAL PLAN VIEW

NOTES:

DEFLECTOR SHALL BE INSPECTED WEEKLY AND AFTER EACH RUNOFF EVENT.

ACCUMULATED SEDIMENT SHALL BE REMOVED FROM DEFLECTOR WITHIN 24 HOURS OF INSPECTION.

BELT SHALL BE REPLACED WHEN WORN AND NO LONGER EFFECTIVE.

MAXIMUM SPACING OF DEFLECTORS SHALL BE AS SHOWN IN TABLE 3.2 OF THE PA DEP EROSION CONTROL MANUAL.

STANDARD CONSTRUCTION DETAIL #3-9
WATER DEFLECTOR

NOT TO SCALE

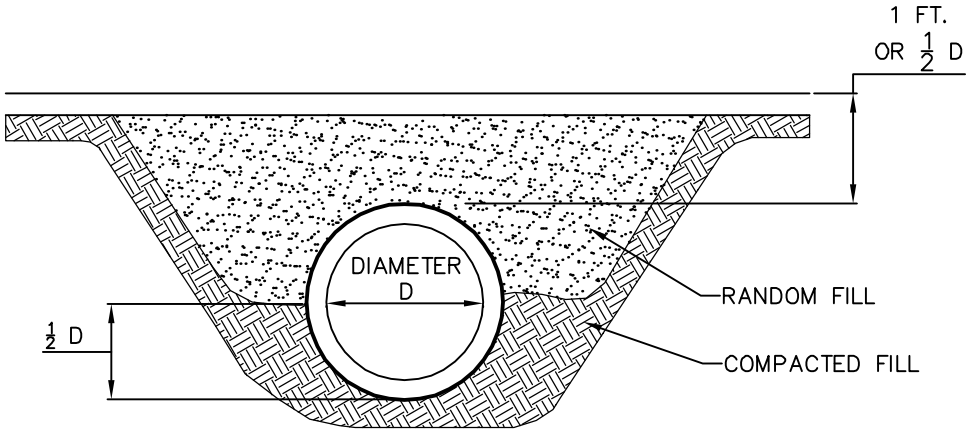

SECTION VIEW

NOTES:

MINIMUM DIAMETER FOR ANY CULVERT IS 12"; OTHERWISE CULVERT SHALL BE SIZED FOR ANTICIPATED PEAK FLOW. PLACE CULVERT SO BOTTOM IS AT SAME LEVEL AS BOTTOM OF DITCH OR ADJOINING SLOPE. CULVERTS SHALL BE PLACED WITH A SLOPE OF 2 TO 4%. LOWER END SHALL BE AT LEAST 2" BELOW UPPER END.

EXTEND CULVERT 12" BEYOND BASE OF ROAD FILL ON BOTH SIDES. FIRMLY PACK FILL AROUND CULVERT, ESPECIALLY THE BOTTOM HALF.

PROVIDE SUITABLE OUTLET PROTECTION* AND, WHERE APPROPRIATE, INLET PROTECTION.

INSPECT CULVERT WEEKLY: REMOVE ANY FLOW OBSTRUCTIONS AND MAKE NECESSARY REPAIRS IMMEDIATELY.

THIS DETAIL MAY BE USED FOR DITCH RELIEF CULVERTS AND FOR CROSSINGS OF ROADSIDE DITCHES. IT IS NOT APPROPRIATE FOR STREAM CROSSINGS.

* FOR STEEP SLOPE (>2H:1V) OUTFALLS, A MINIMUM 20 FOOT LONG R-5 APRON IS RECOMMENDED FOR TEMPORARY ACCESS ROADS WHERE THE RECOMMENDED CULVERT SPACING IS USED. FOR PERMANENT ACCESS ROADS, A MINIMUM R-6 ROCK SIZE IS RECOMMENDED.

STANDARD CONSTRUCTION DETAIL #3-10
DITCH RELIEF CULVERT

NOT TO SCALE

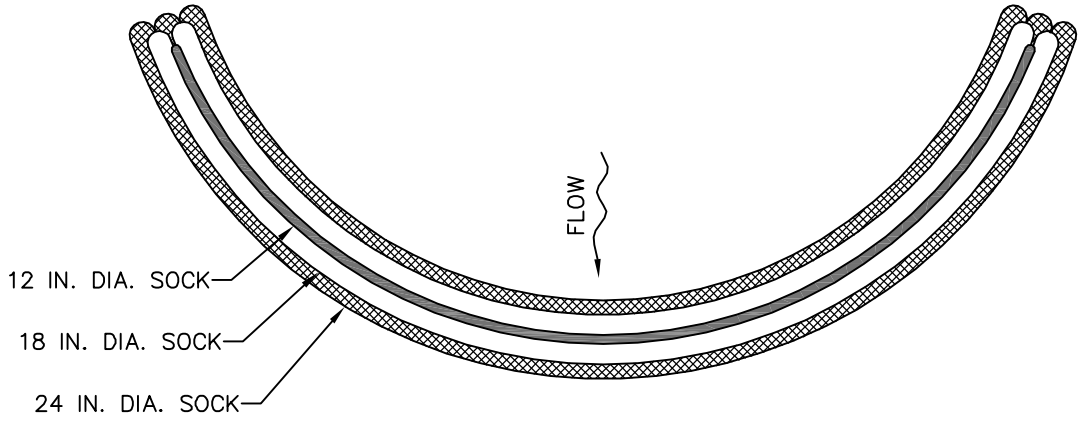

PLAN VIEW

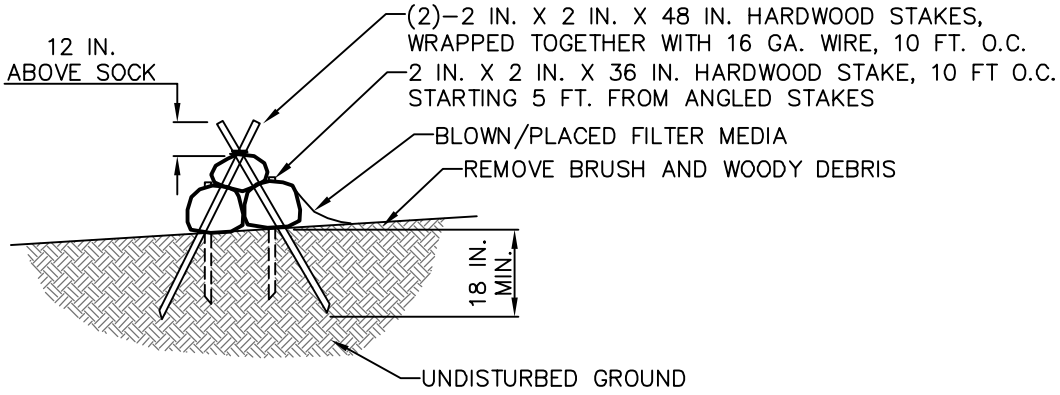

STAKING DETAIL

DESIGN NOTES:

1. COMPOST SOCK SEDIMENT TRAP SHALL BE SIZED TO PROVIDE 2000 CUBIC FEET OF STORAGE CAPACITY FOR EACH ACRE TRIBUTARY TO THE TRAP.
2. MINIMUM BASE WIDTH IS EQUAL TO THE HEIGHT.
3. SEDIMENT ACCUMULATION SHALL NOT EXCEED 1/3 THE TOTAL HEIGHT OF THE TRAP.
4. SOCKS SHALL BE OF LARGER DIAMETER AT THE BASE OF THE TRAP AND DECREASE IN DIAMETER FOR SUCCESSIVE LAYERS AS SHOWN ON THE PLAN VIEW.
5. ENDS OF THE TRAP SHALL BE A MINIMUM OF 1 FOOT HIGHER IN ELEVATION THAN THE MID–SECTION, WHICH SHALL BE LOCATED AT THE POINT OF DISCHARGE.

NOTES:

SOCK MATERIAL SHALL MEET THE STANDARDS OF TABLE 4.1 OF THE PA DEP EROSION CONTROL MANUAL. COMPOST SHALL MEET THE STANDARDS OF TABLE 4.2 OF THE PA DEP EROSION CONTROL MANUAL.

COMPOST SOCK SEDIMENT TRAPS SHALL NOT EXCEED THREE SOCKS IN HEIGHT AND SHALL BE STACKED IN PYRAMIDAL FORM AS SHOWN ABOVE. MINIMUM TRAP HEIGHT IS ONE 24" DIAMETER SOCK. ADDITIONAL STORAGE MAY BE PROVIDED BY MEANS OF AN EXCAVATED SUMP 12" DEEP EXTENDING 1 TO 3 FEET UPSLOPE OF THE SOCKS ALONG THE LOWER SIDE OF THE TRAP.

COMPOST SOCK SEDIMENT TRAPS SHALL PROVIDE 2,000 CUBIC FEET STORAGE CAPACITY WITH 12" FREEBOARD FOR EACH TRIBUTARY DRAINAGE ACRE. (SEE MANUFACTURER FOR ANTICIPATED SETTLEMENT.)

THE MAXIMUM TRIBUTARY DRAINAGE AREA IS 5.0 ACRES. SINCE COMPOST SOCKS ARE "FLOW–THROUGH," NO SPILLWAY IS REQUIRED.

COMPOST SOCK SEDIMENT TRAPS SHALL BE INSPECTED WEEKLY AND AFTER EACH RUNOFF EVENT. SEDIMENT SHALL BE REMOVED WHEN IT REACHES 1/3 THE HEIGHT OF THE SOCKS.

PHOTODEGRADABLE AND BIODEGRADABLE SOCKS SHALL NOT BE USED FOR MORE THAN 1 YEAR.

STANDARD CONSTRUCTION DETAIL #3-11
COMPOST SOCK SEDIMENT TRAP

NOT TO SCALE

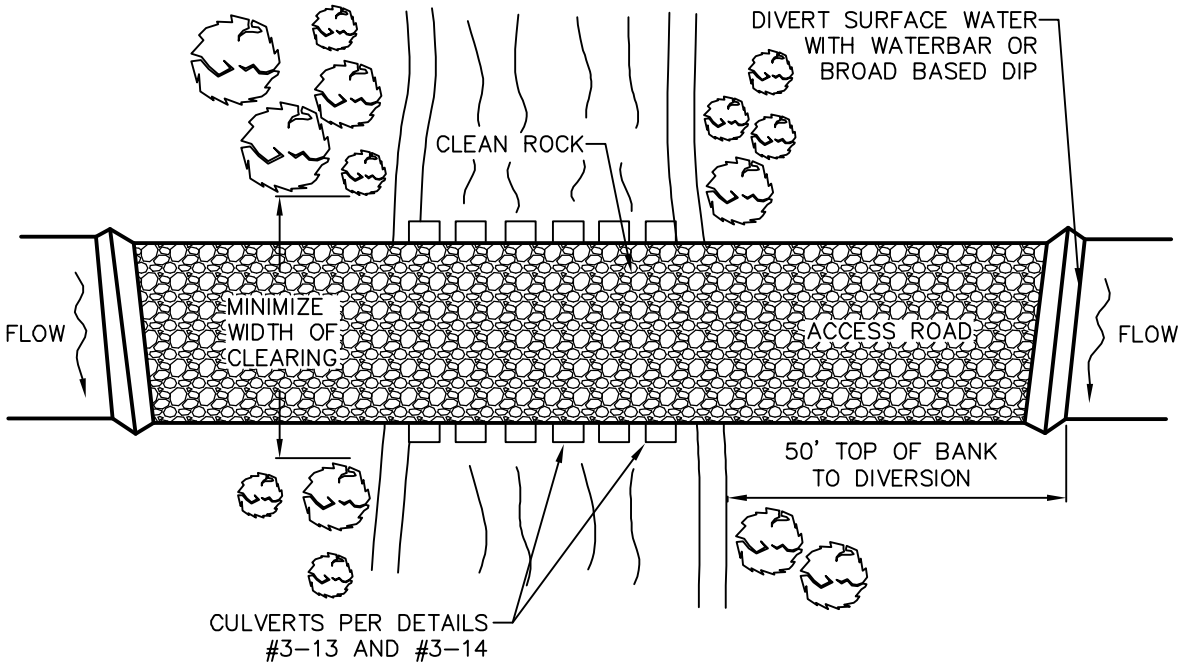

PLAN VIEW

NOTES:

WATERBARS AND BROAD-BASED DIPS SHALL DISCHARGE TO SEDIMENT REMOVAL FACILITY.

CLEAN ROCK SHALL CONFORM TO CHAPTER 105 PERMITTING REQUIREMENTS.

FOLLOW PERMIT CONDITIONS REGARDING REMOVAL OF CROSSING.

STANDARD CONSTRUCTION DETAIL #3-12
TEMPORARY STREAM CROSSING - PLAN VIEW

NOT TO SCALE

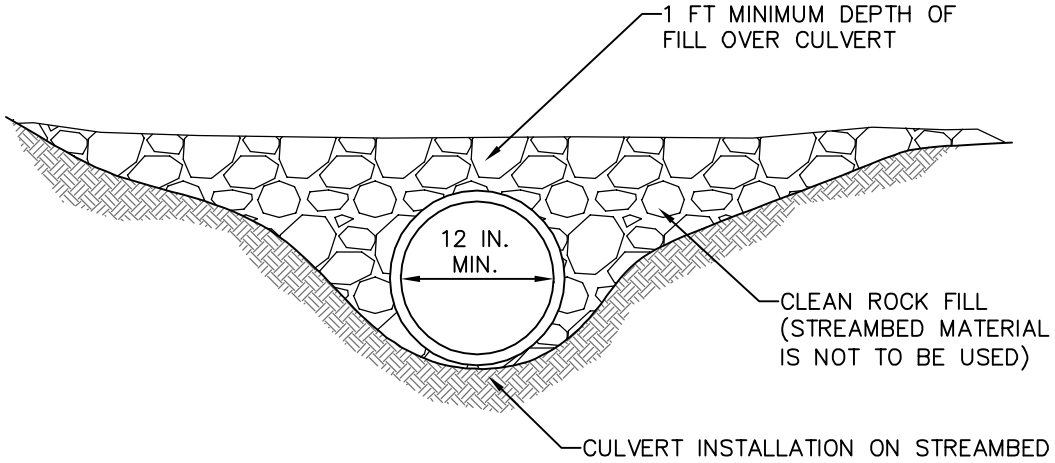

CROSS–SECTION VIEW

NOTES:

PROVIDE 50' STABILIZED ACCESS TO CROSSING ON BOTH SIDES OF STREAM CHANNEL (SEE STANDARD CONSTRUCTION DETAIL #3–12).

PIPES SHALL EXTEND BEYOND THE TOE OF THE ROADWAY.

RUNOFF FROM THE ROADWAY SHALL BE DIVERTED OFF THE ROADWAY AND INTO A SEDIMENT REMOVAL BMP BEFORE IT REACHES THE ROCK APPROACH TO THE CROSSING.

MAINTENANCE

1. TEMPORARY STREAM CROSSINGS SHALL BE INSPECTED ON A DAILY BASIS.
2. DAMAGED CROSSINGS SHALL BE REPAIRED WITHIN 24 HOURS OF THE INSPECTION AND BEFORE ANY SUBSEQUENT USE.
3. SEDIMENT DEPOSITS ON THE CROSSING OR ITS APPROACHES SHALL BE REMOVED WITHIN 24 HOURS OF THE INSPECTION.

AS SOON AS THE TEMPORARY CROSSING IS NO LONGER NEEDED, IT SHALL BE REMOVED. ALL MATERIALS SHALL BE DISPOSED OF PROPERLY AND DISTURBED AREAS STABILIZED.

STANDARD CONSTRUCTION DETAIL #3-13
TEMPORARY STREAM CROSSING

NOT TO SCALE

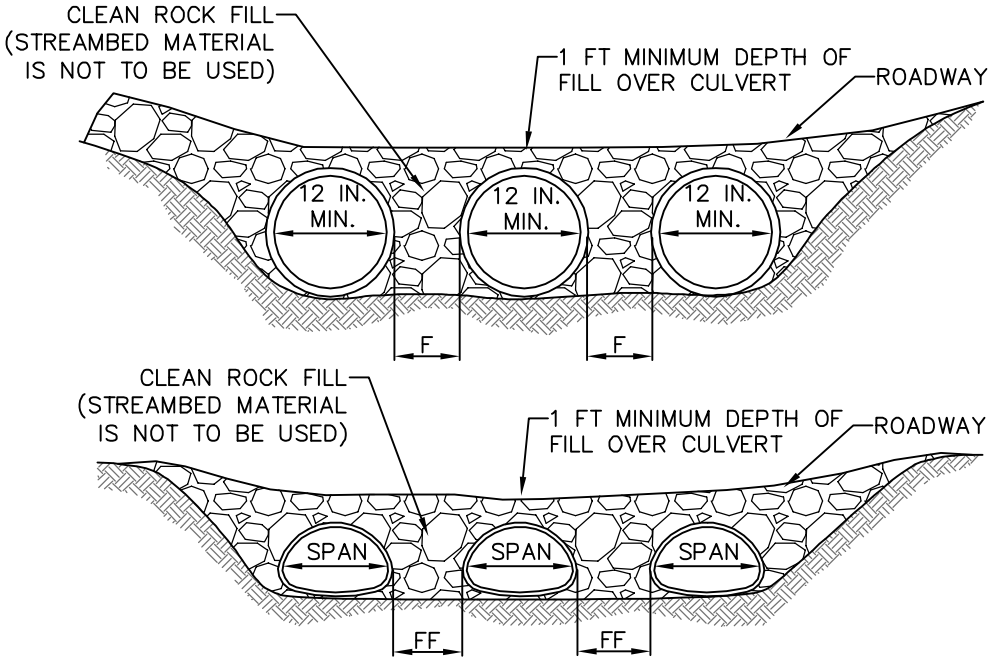

CROSS–SECTIONS

NOTES:

MULTIPLE PIPES AND MULTIPLE SPAN BRIDGES AND CULVERTS WHICH MAY TEND TO COLLECT DEBRIS, CONTRIBUTE TO THE FORMATION OF ICE JAMS AND INCREASE HEAD LOSSES SHALL BE AVOIDED TO THE MAXIMUM EXTENT PRACTICABLE. CROSSINGS OF LESS THAN 15 FEET SHALL BE BY ONE SPAN, EXCEPT WHERE CONDITIONS MAKE IT IMPRACTICAL TO AFFECT THE CROSSING WITHOUT MULTIPLE SPANS (SECTION 105.162).

SEE TABLE 3.5 OF THE PA DEP EROSION CONTROL MANUAL FOR DISTANCE VALUES 'F' AND 'FF'. FOR ARCH PIPES, USE CLOSEST AVAILABLE STANDARD SIZES THAT PROVIDE THE SAME WATERWAY OPENING AREA SHOULD SIZES WITHIN THE TABLE BE UNAVAILABLE.

PROVIDE 50' STABILIZED ACCESS TO CROSSING ON BOTH SIDES OF STREAM CHANNEL (SEE STANDARD CONSTRUCTION DETAIL #3–12).

PIPES SHALL EXTEND BEYOND THE TOE OF THE ROADWAY.

RUNOFF FROM THE ROADWAY SHALL BE DIVERTED OFF THE ROADWAY AND INTO A SEDIMENT REMOVAL BMP BEFORE IT REACHES THE ROCK APPROACH TO THE CROSSING.

MAINTENANCE

1. TEMPORARY STREAM CROSSINGS SHALL BE INSPECTED ON A DAILY BASIS.
2. DAMAGED CROSSINGS SHALL BE REPAIRED WITHIN 24 HOURS OF THE INSPECTION AND BEFORE ANY SUBSEQUENT USE.
3. SEDIMENT DEPOSITS ON THE CROSSING OR ITS APPROACHES SHALL BE REMOVED WITHIN 24 HOURS OF THE INSPECTION.

AS SOON AS THE TEMPORARY CROSSING IS NO LONGER NEEDED, IT SHALL BE REMOVED. ALL MATERIALS SHALL BE DISPOSED OF PROPERLY AND DISTURBED AREAS STABILIZED.

STANDARD CONSTRUCTION DETAIL #3-14
TEMPORARY STREAM CROSSING - MULTIPLE PIPES

NOT TO SCALE

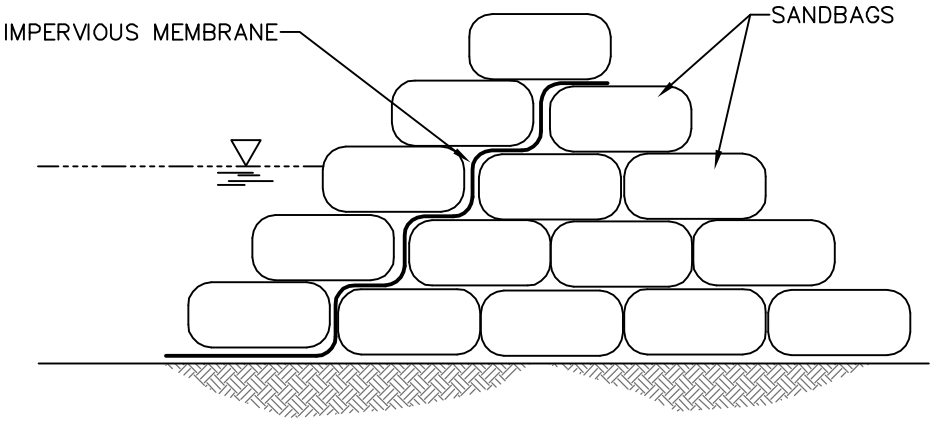

2 BAG MIN. HEIGHT ABOVE NORMAL BASE FLOW

STACKED SANDBAGS OPTION

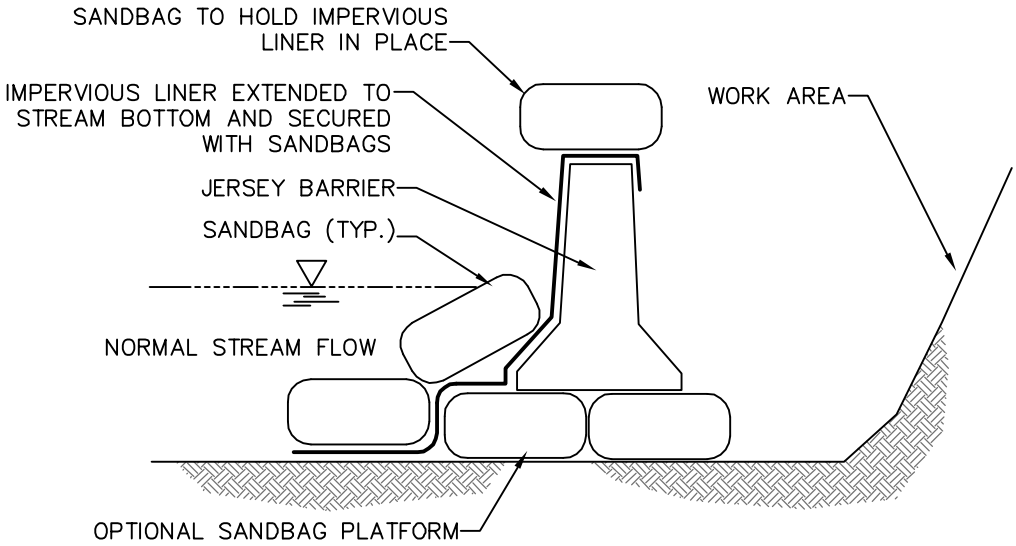

JERSEY BARRIER OPTION

STANDARD CONSTRUCTION DETAIL #3-15
SANDBAG DIVERSION DAM OR COFFERDAM

NOT TO SCALE

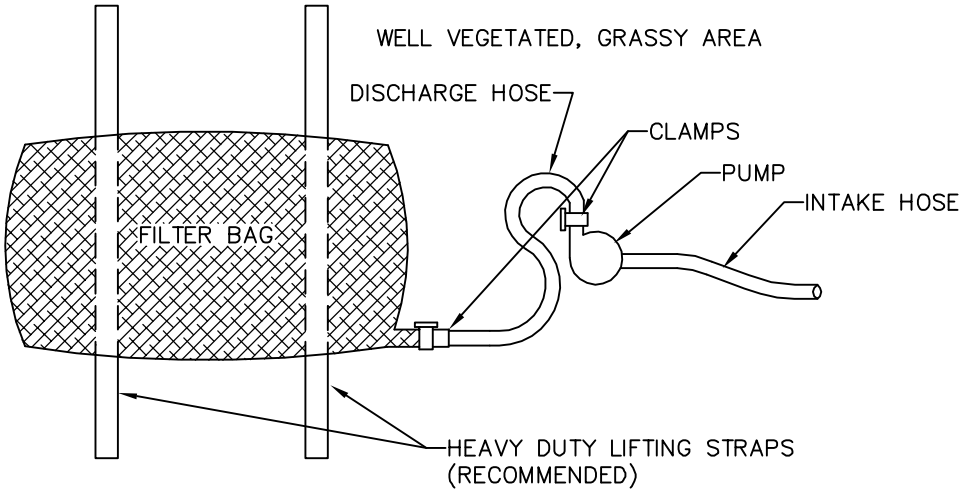

PLAN VIEW

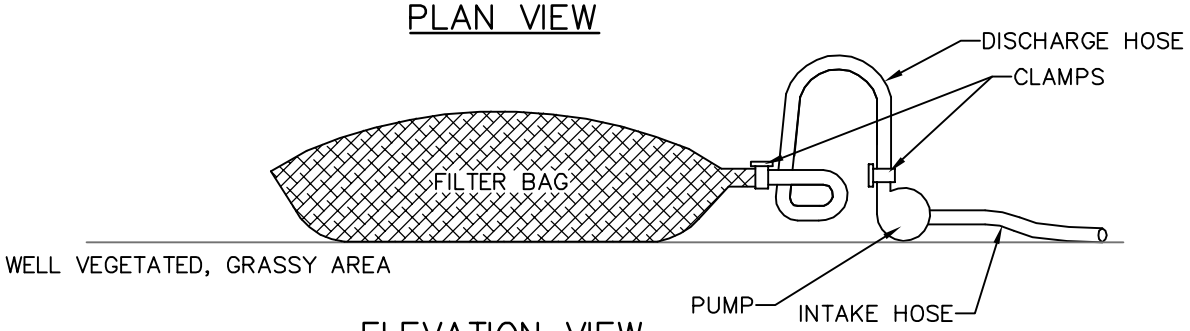

ELEVATION VIEW

NOTES:

LOW VOLUME FILTER BAGS SHALL BE MADE FROM NON-WOVEN GEOTEXTILE MATERIAL SEWN WITH HIGH STRENGTH, DOUBLE STITCHED "J" TYPE SEAMS. THEY SHALL BE CAPABLE OF TRAPPING PARTICLES LARGER THAN 150 MICRONS. HIGH VOLUME FILTER BAGS SHALL BE MADE FROM WOVEN GEOTEXTILES THAT MEET THE FOLLOWING STANDARDS:

PROPERTY	TEST METHOD	MINIMUM STANDARD
AVG. WIDE WIDTH STRENGTH	ASTM D-4884	60 LB/IN
GRAB TENSILE	ASTM D-4632	205 LB
PUNCTURE	ASTM D-4833	110 LB
MULLEN BURST	ASTM D-3786	350 PSI
UV RESISTANCE	ASTM D-4355	70%
AOS % RETAINED	ASTM D-4751	80 SIEVE

A SUITABLE MEANS OF ACCESSING THE BAG WITH MACHINERY REQUIRED FOR DISPOSAL PURPOSES SHALL BE PROVIDED. FILTER BAGS SHALL BE REPLACED WHEN THEY BECOME 1/2 FULL OF SEDIMENT. SPARE BAGS SHALL BE KEPT AVAILABLE FOR REPLACEMENT OF THOSE THAT HAVE FAILED OR ARE FILLED. BAGS SHALL BE PLACED ON STRAPS TO FACILITATE REMOVAL UNLESS BAGS COME WITH LIFTING STRAPS ALREADY ATTACHED.

BAGS SHALL BE LOCATED IN WELL-VEGETATED (GRASSY) AREA, AND DISCHARGE ONTO STABLE, EROSION RESISTANT AREAS. WHERE THIS IS NOT POSSIBLE, A GEOTEXTILE UNDERLAYMENT AND FLOW PATH SHALL BE PROVIDED. BAGS MAY BE PLACED ON FILTER STONE TO INCREASE DISCHARGE CAPACITY. BAGS SHALL NOT BE PLACED ON SLOPES GREATER THAN 5%. FOR SLOPES EXCEEDING 5%, CLEAN ROCK OR OTHER NON-ERODIBLE AND NON-POLLUTING MATERIAL MAY BE PLACED UNDER THE BAG TO REDUCE SLOPE STEEPNESS.

NO DOWNSLOPE SEDIMENT BARRIER IS REQUIRED FOR MOST INSTALLATIONS. COMPOST BERM OR COMPOST FILTER SOCK SHALL BE INSTALLED BELOW BAGS LOCATED IN HQ OR EV WATERSHEDS, WITHIN 50 FEET OF ANY RECEIVING SURFACE WATER OR WHERE GRASSY AREA IS NOT AVAILABLE.

THE PUMP DISCHARGE HOSE SHALL BE INSERTED INTO THE BAGS IN THE MANNER SPECIFIED BY THE MANUFACTURER AND SECURELY CLAMPED. A PIECE OF PVC PIPE IS RECOMMENDED FOR THIS PURPOSE.

THE PUMPING RATE SHALL BE NO GREATER THAN 750 GPM OR 1/2 THE MAXIMUM SPECIFIED BY THE MANUFACTURER, WHICHEVER IS LESS. PUMP INTAKES SHALL BE FLOATING AND SCREENED.

FILTER BAGS SHALL BE INSPECTED DAILY. IF ANY PROBLEM IS DETECTED, PUMPING SHALL CEASE IMMEDIATELY AND NOT RESUME UNTIL THE PROBLEM IS CORRECTED.

STANDARD CONSTRUCTION DETAIL #3-16
PUMPED WATER FILTER BAG

NOT TO SCALE

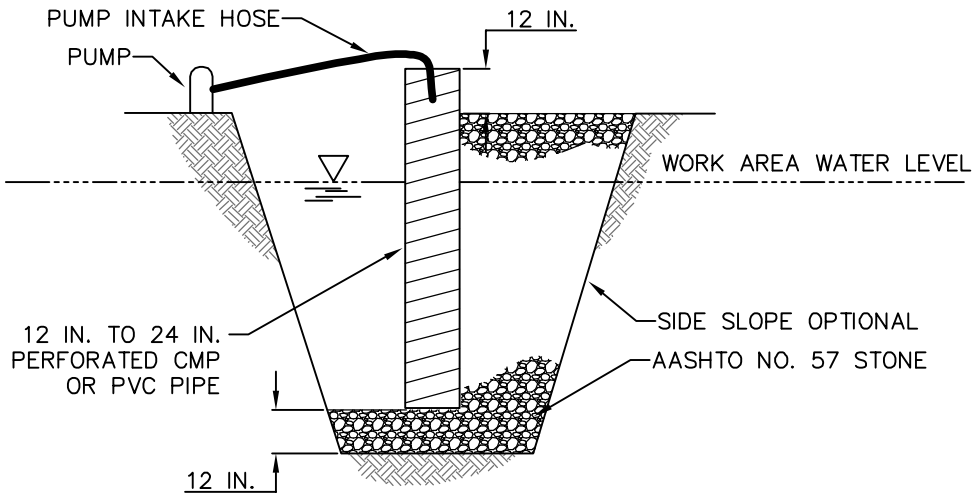

SECTION VIEW

NOTES:

LOCATE SUMP AT LOW POINT IN WORK AREA AND OUTSIDE OF CONSTRUCTION ACTIVITY. WHEREVER RUNOFF FROM A WORK AREA FLOWS DIRECTLY TO THE SUMP AREA, A FILTER BAG SHALL BE ATTACHED AT THE DISCHARGE POINT UNLESS PUMPING TO A SEDIMENT BASIN OR SEDIMENT TRAP.

MINIMUM DIAMETER OF PIT BOTTOM SHALL BE 24" LARGER THAN PIPE DIAMETER. MINIMUM DEPTH OF PIT SHALL BE 24" BELOW WATER LEVEL IN WORK AREA (INCLUDING THE AASHTO #57 STONE). 12" TO 24" PERFORATED CMP OR PVC PIPE SHALL BE SET ON 12" OF CLEAN AASHTO # 57 STONE.

VOID SPACE AROUND PIPE SHALL BE FILLED WITH AASHTO # 57 STONE. PIPE TO EXTEND 12" MIN. ABOVE TOP OF STONE AND/OR WATER BEING PUMPED FROM WORK AREA.

SET PUMP INTAKE INSIDE STANDPIPE.

DISCHARGE FROM PUMP SHALL BE TO A STABLE AREA BELOW DISTURBANCES FROM THE WORK ZONE.

SUMP MAY BE USED IN CONJUNCTION WITH FILTER BAG WHERE ADDITIONAL FILTERING IS NEEDED.

STANDARD CONSTRUCTION DETAIL #3-17

SUMP PIT

NOT TO SCALE

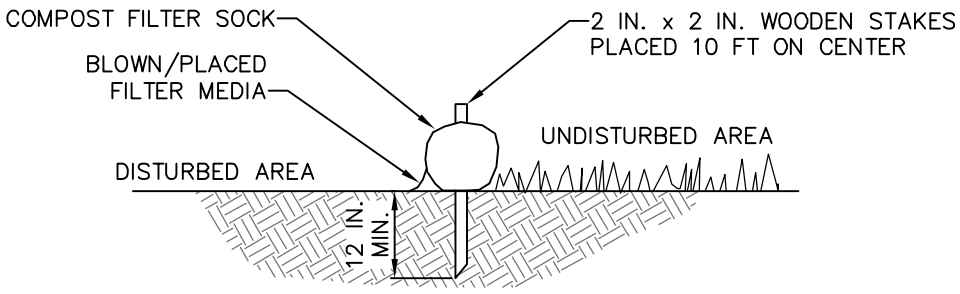

SECTION

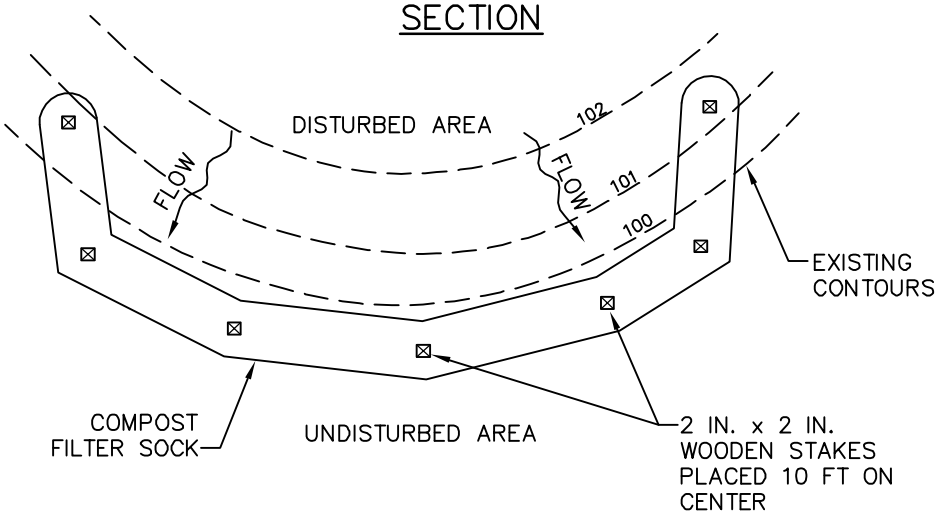

PLAN VIEW

NOTES:

SOCK FABRIC SHALL MEET STANDARDS OF TABLE 4.1 OF THE PA DEP EROSION CONTROL MANUAL. COMPOST SHALL MEET THE STANDARDS OF TABLE 4.2 OF THE PA DEP EROSION CONTROL MANUAL.

COMPOST FILTER SOCK SHALL BE PLACED AT EXISTING LEVEL GRADE. BOTH ENDS OF THE BARRIER SHALL BE EXTENDED AT LEAST 8 FEET UP SLOPE AT 45 DEGREES TO THE MAIN BARRIER ALIGNMENT. MAXIMUM SLOPE LENGTH ABOVE ANY BARRIER SHALL NOT EXCEED THAT SPECIFIED FOR THE SIZE OF THE SOCK AND THE SLOPE OF ITS TRIBUTARY AREA.

TRAFFIC SHALL NOT BE PERMITTED TO CROSS COMPOST FILTER SOCKS.

ACCUMULATED SEDIMENT SHALL BE REMOVED WHEN IT REACHES 1/2 THE ABOVE GROUND HEIGHT OF THE BARRIER AND DISPOSED IN THE MANNER DESCRIBED ELSEWHERE IN THE PLAN.

COMPOST FILTER SOCKS SHALL BE INSPECTED WEEKLY AND AFTER EACH RUNOFF EVENT. DAMAGED SOCKS SHALL BE REPAIRED ACCORDING TO MANUFACTURER'S SPECIFICATIONS OR REPLACED WITHIN 24 HOURS OF INSPECTION.

BIODEGRADABLE COMPOST FILTER SOCKS SHALL BE REPLACED AFTER 6 MONTHS; PHOTODEGRADABLE SOCKS AFTER 1 YEAR. POLYPROPYLENE SOCKS SHALL BE REPLACED ACCORDING TO MANUFACTURER'S RECOMMENDATIONS.

UPON STABILIZATION OF THE AREA TRIBUTARY TO THE SOCK, STAKES SHALL BE REMOVED. THE SOCK MAY BE LEFT IN PLACE AND VEGETATED OR REMOVED. IN THE LATTER CASE, THE MESH SHALL BE CUT OPEN AND THE MULCH SPREAD AS A SOIL SUPPLEMENT.

STANDARD CONSTRUCTION DETAIL #4-1
COMPOST FILTER SOCK

NOT TO SCALE

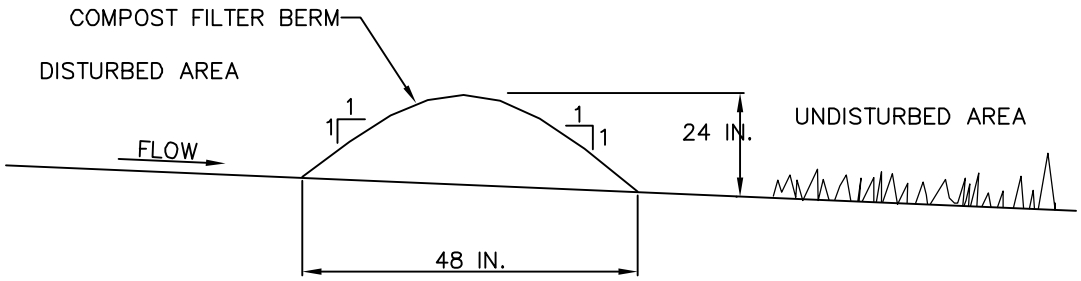

SECTION

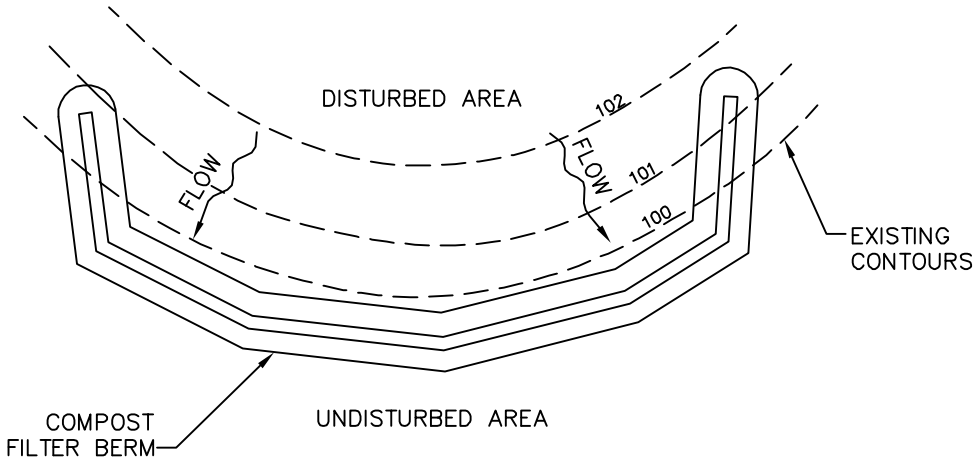

PLAN VIEW

NOTES:

COMPOST SHALL MEET STANDARDS OF TABLE 4.2 OF THE PA DEP EROSION CONTROL MANUAL.

COMPOST FILTER BERMS SHALL BE PLACED AT EXISTING LEVEL GRADE. BOTH ENDS OF THE BERM SHALL BE EXTENDED AT LEAST 8 FEET UP SLOPE AT 45 DEGREES TO THE MAIN BERM ALIGNMENT.

THE MAXIMUM SLOPE LENGTH ABOVE A COMPOST FILTER BERM SHALL NOT EXCEED THAT SHOWN IN TABLE 4.4 OF THE PA DEP EROSION CONTROL MANUAL FOR THE STANDARD SILT FENCE (18 IN. HIGH FENCE).

TALL GRASS SHALL BE CUT PRIOR TO INSTALLATION TO MINIMIZE POTENTIAL FOR UNDERCUTTING. BERM SHALL BE NETTED OR OTHERWISE ANCHORED AFTER INSTALLATION.

SEDIMENT SHALL BE REMOVED WHEN ACCUMULATIONS REACH 1/3 THE ABOVE GROUND HEIGHT OF THE BERM.

ANY SECTION COMPOST FILTER BERM WHICH HAS BEEN UNDERMINED OR TOPPED SHALL BE IMMEDIATELY REPLACED. CONCENTRATED FLOWS SHALL NOT BE DIRECTED TOWARD ANY COMPOST FILTER BERM.

STANDARD CONSTRUCTION DETAIL #4-2
COMPOST FILTER BERM

NOT TO SCALE

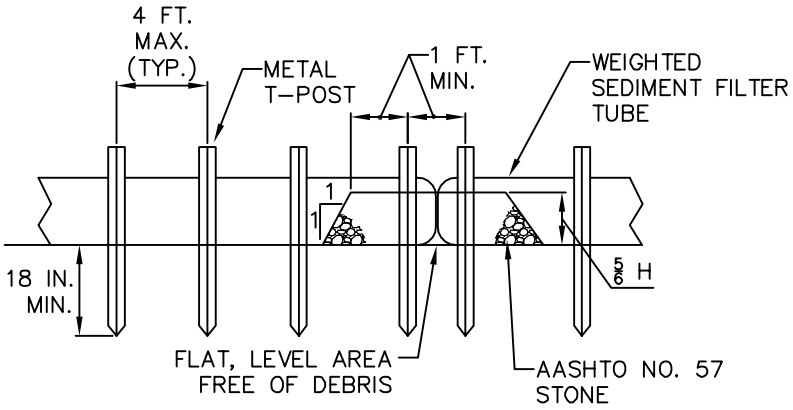

FRONT VIEW

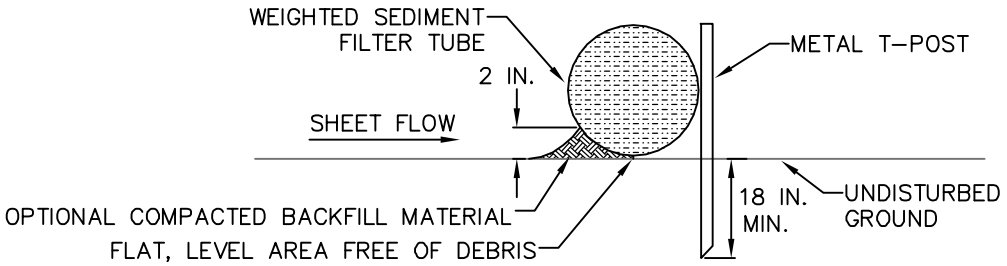

SECTION VIEW

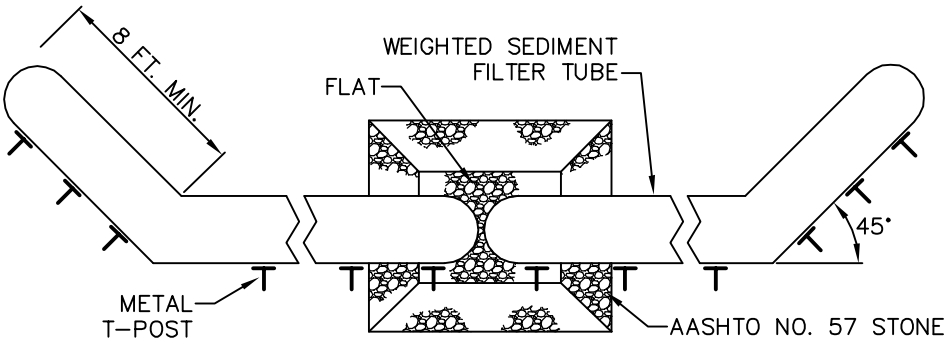

PLAN VIEW

NOTES:

A SEDIMENT TUBE PLACEMENT AREA SHALL BE PREPARED SO THAT IT IS FREE OF ALL DEBRIS, INCLUDING ROCKS, STICKS, ROOTS, ETC. A 2" LAYER OF AASHTO #57 STONE SHALL BE PLACED WHERE THE LOGS COME TOGETHER. ENDS OF TUBES MAY BE OVERLAPPED ACCORDING TO MANUFACTURER'S SPECIFICATIONS INSTEAD OF THE AASHTO #57 STONE.

SEDIMENT TUBES SHALL BE PLACED AT EXISTING LEVEL GRADE. ENDS SHALL BE EXTENDED UPSLOPE AT 45 DEGREES TO THE MAIN FILTER LOG ALIGNMENT FOR A MINIMUM OF 8 FEET.

SEDIMENT TUBES SHALL BE INSPECTED WEEKLY AND AFTER EACH RUNOFF EVENT.

SEDIMENT DEPOSITS SHALL BE CLEANED FROM THE LOG WHEN IT REACHES HALF THE HEIGHT OF THE TUBE.

DAMAGED TUBES SHALL BE REPLACED WITHIN 24 HOURS OF INSPECTION. A SUPPLY OF TUBES SHALL BE MAINTAINED ON SITE FOR THIS PURPOSE.

STANDARD CONSTRUCTION DETAIL #4-3
WEIGHTED SEDIMENT FILTER TUBE INSTALLATION

NOT TO SCALE

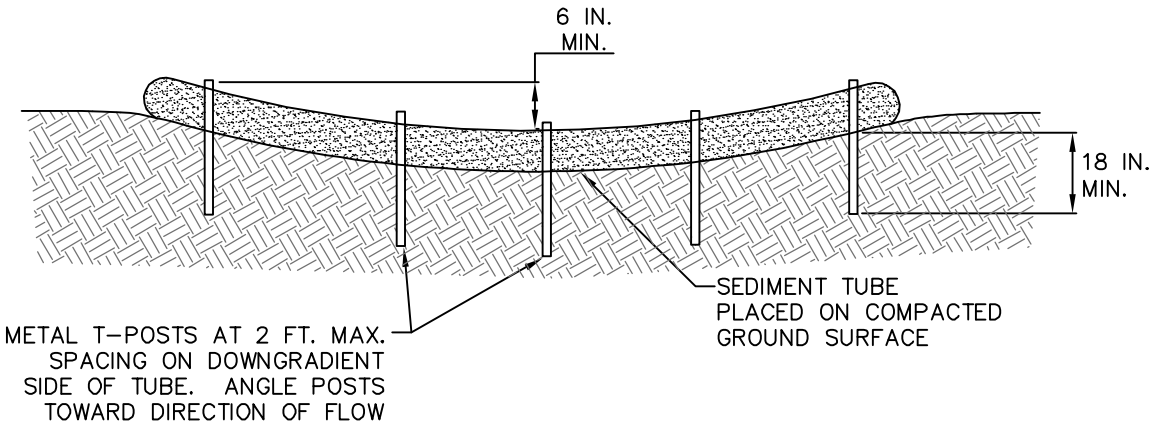

FRONT VIEW

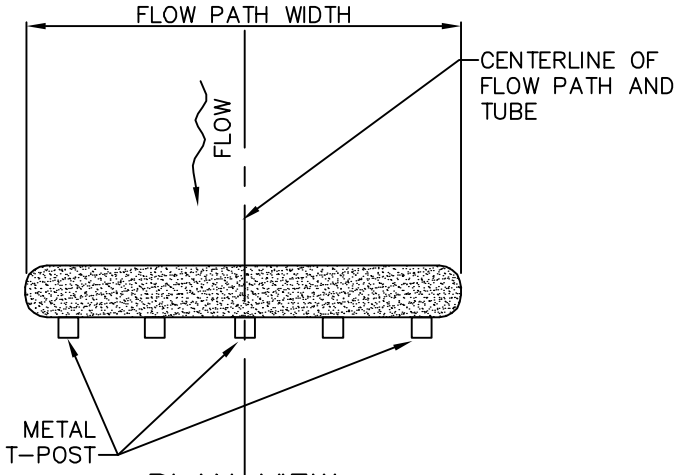

PLAN VIEW

NOTES:

THIS DETAIL APPLICABLE TO FLOW PATHS WITH WIDTHS LESS THAN OR EQUAL TO ONE TUBE LENGTH.

METAL T–POSTS SHALL BE INSTALLED AT THE CENTER AND AT EACH END OF THE TUBE. ADDITIONAL T–POSTS SHALL BE INSTALLED AS NEEDED TO MEET THE MAXIMUM 2–FOOT SPACING.

SEDIMENT TUBES SHALL BE INSPECTED WEEKLY AND AFTER EACH RUNOFF EVENT.

ACCUMULATED SEDIMENT SHALL BE REMOVED WHEN IT REACHES HALF THE HEIGHT OF THE TUBE AND DISPOSED AS DIRECTED ELSEWHERE IN THE E&S PLAN.

DAMAGED TUBES SHALL BE REPAIRED OR REPLACED WITHIN 24 HOURS OF INSPECTION. A SUPPLY OF TUBES SHALL BE KEPT ON SITE FOR THIS PURPOSE.

STANDARD CONSTRUCTION DETAIL #4-4
WEIGHTED SEDIMENT FILTER TUBE INSTALLATION
CONCENTRATED FLOW AREA

NOT TO SCALE

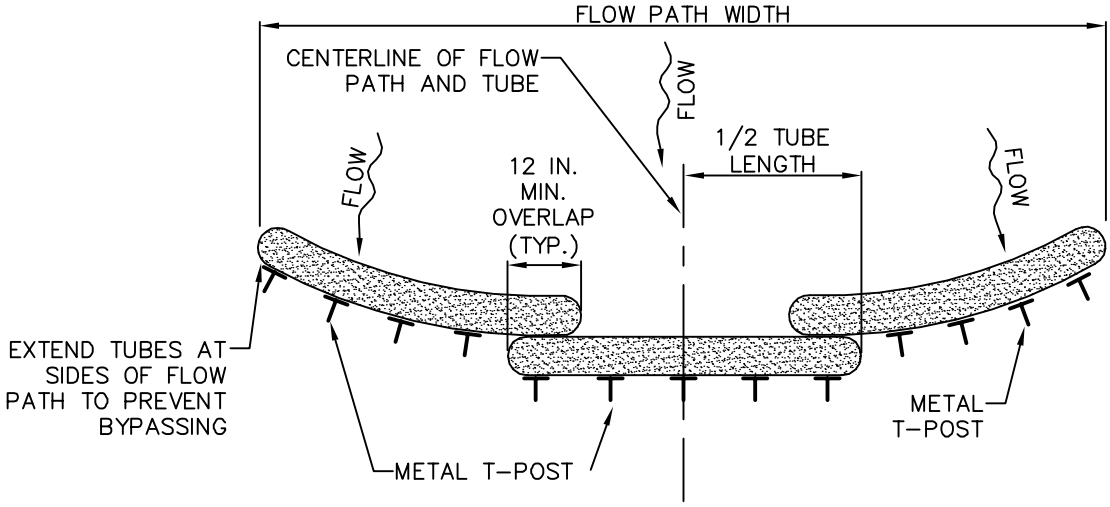

PLAN VIEW

NOTES:

METAL T-POSTS SHALL BE INSTALLED AT THE CENTER AND AT EACH END OF THE TUBE. ADDITIONAL T-POSTS SHALL BE INSTALLED AS NEEDED TO MEET THE MAXIMUM 2-FOOT SPACING. SLIGHTLY ANGLE STAKES WITH TOP FACING TOWARDS DIRECTION OF FLOW.

SEDIMENT TUBES SHALL BE INSPECTED WEEKLY AND AFTER EACH RUNOFF EVENT.

ACCUMULATED SEDIMENT SHALL BE REMOVED WHEN IT REACHES HALF THE HEIGHT OF THE TUBE AND DISPOSED AS DIRECTED ELSEWHERE IN THE E&S PLAN.

DAMAGED TUBES SHALL BE REPAIRED OR REPLACED WITHIN 24 HOURS OF INSPECTION. A SUPPLY OF TUBES SHALL BE KEPT ON SITE FOR THIS PURPOSE.

STANDARD CONSTRUCTION DETAIL #4-5
WEIGHTED SEDIMENT FILTER TUBE INSTALLATION ACROSS A WIDE FLOW PATH

NOT TO SCALE

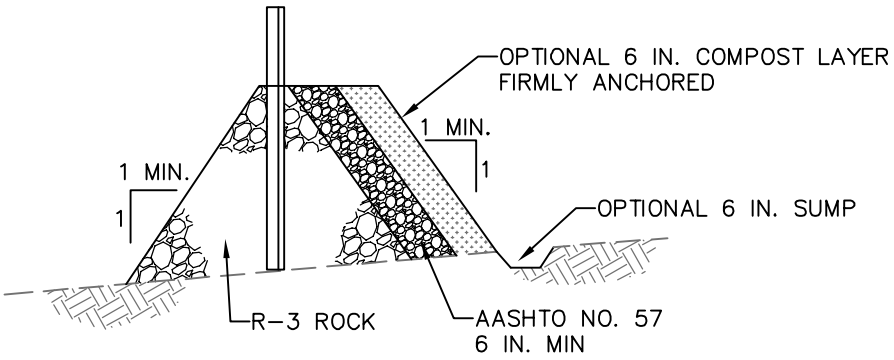

OUTLET CROSS-SECTION

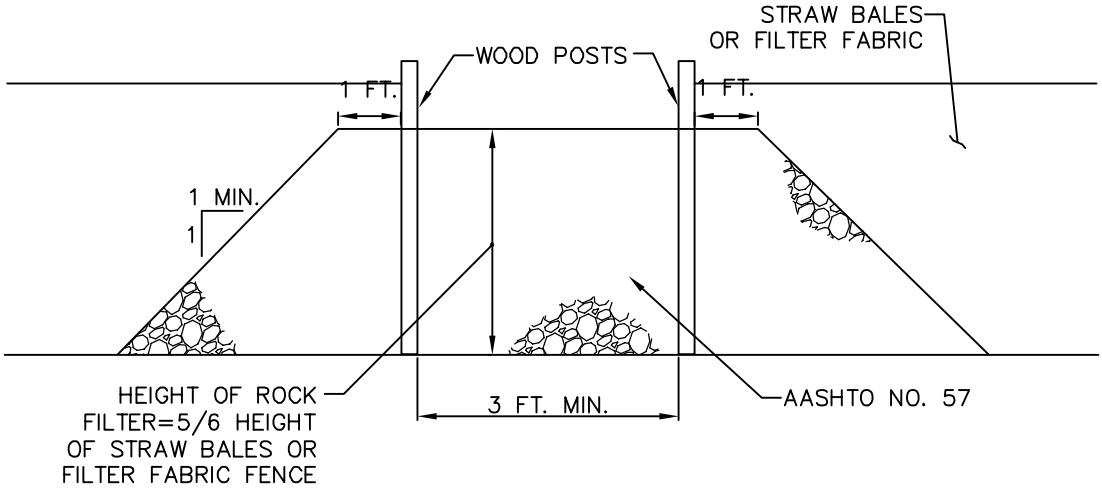

UP-SLOPE FACE

NOTES:

A ROCK FILTER OUTLET SHALL BE INSTALLED WHERE FAILURE OF A SILT FENCE OR STRAW BALE BARRIER HAS OCCURRED DUE TO CONCENTRATED FLOW. ANCHORED COMPOST LAYER SHALL BE USED ON UPSLOPE FACE IN HQ AND EV WATERSHEDS.

SEDIMENT SHALL BE REMOVED WHEN ACCUMULATIONS REACH 1/3 THE HEIGHT OF THE OUTLET.

STANDARD CONSTRUCTION DETAIL #4-6
ROCK FILTER OUTLET

NOT TO SCALE

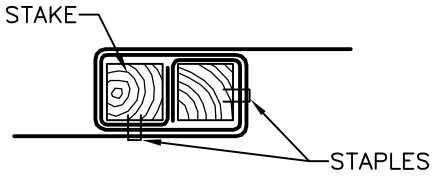

JOINING FENCE SECTIONS

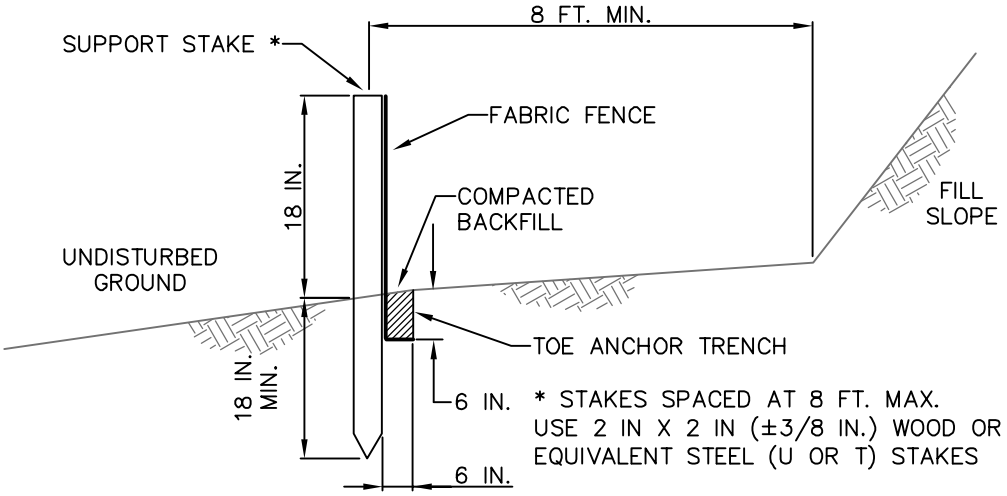

SECTION VIEW

NOTES:

FABRIC SHALL HAVE THE MINIMUM PROPERTIES AS SHOWN IN TABLE 4.3 OF THE PA DEP EROSION CONTROL MANUAL.

FABRIC WIDTH SHALL BE 30 IN. MINIMUM. STAKES SHALL BE HARDWOOD OR EQUIVALENT STEEL (U OR T) STAKES.

SILT FENCE SHALL BE PLACED AT LEVEL EXISTING GRADE. BOTH ENDS OF THE FENCE SHALL BE EXTENDED AT LEAST 8 FEET UP SLOPE AT 45 DEGREES TO THE MAIN FENCE ALIGNMENT.

SEDIMENT SHALL BE REMOVED WHEN ACCUMULATIONS REACH HALF THE ABOVE GROUND HEIGHT OF THE FENCE.

ANY SECTION OF SILT FENCE WHICH HAS BEEN UNDERMINED OR TOPPED SHALL BE IMMEDIATELY REPLACED WITH A ROCK FILTER OUTLET (STANDARD CONSTRUCTION DETAIL # 4–6).

FENCE SHALL BE REMOVED AND PROPERLY DISPOSED OF WHEN TRIBUTARY AREA IS PERMANENTLY STABILIZED.

STANDARD CONSTRUCTION DETAIL #4-7
STANDARD SILT FENCE (18" HIGH)

NOT TO SCALE

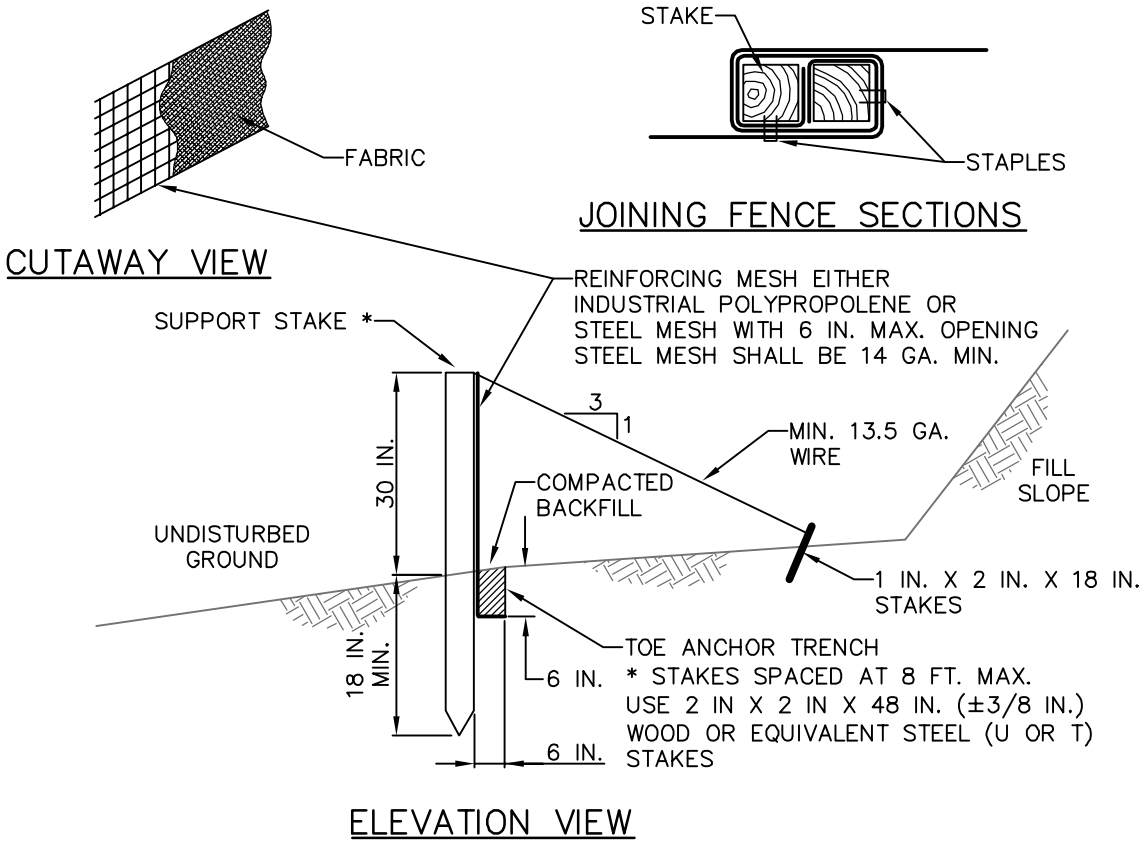

NOTES:

FABRIC SHALL HAVE THE MINIMUM PROPERTIES AS SHOWN IN TABLE 4.3 OF THE PA DEP EROSION CONTROL MANUAL.

FABRIC WIDTH SHALL BE 42 IN. MINIMUM. STAKES SHALL BE HARDWOOD OR EQUIVALENT STEEL (U OR T) STAKES. AN 18 IN. SUPPORT STAKE SHALL BE DRIVEN 12 IN. MINIMUM INTO UNDISTURBED GROUND.

SILT FENCE SHALL BE PLACED AT LEVEL EXISTING GRADE. BOTH ENDS OF THE FENCE SHALL BE EXTENDED AT LEAST 8 FEET UP SLOPE AT 45 DEGREES TO THE MAIN FENCE ALIGNMENT.

SEDIMENT SHALL BE REMOVED WHEN ACCUMULATIONS REACH HALF THE ABOVE GROUND HEIGHT OF THE FENCE.

ANY SECTION OF SILT FENCE WHICH HAS BEEN UNDERMINED OR TOPPED SHALL BE IMMEDIATELY REPLACED WITH A ROCK FILTER OUTLET (STANDARD CONSTRUCTION DETAIL # 4–6).

FENCE SHALL BE REMOVED AND PROPERLY DISPOSED OF WHEN TRIBUTARY AREA IS PERMANENTLY STABILIZED.

STANDARD CONSTRUCTION DETAIL #4-8
REINFORCED SILT FENCE (30" HIGH)

NOT TO SCALE

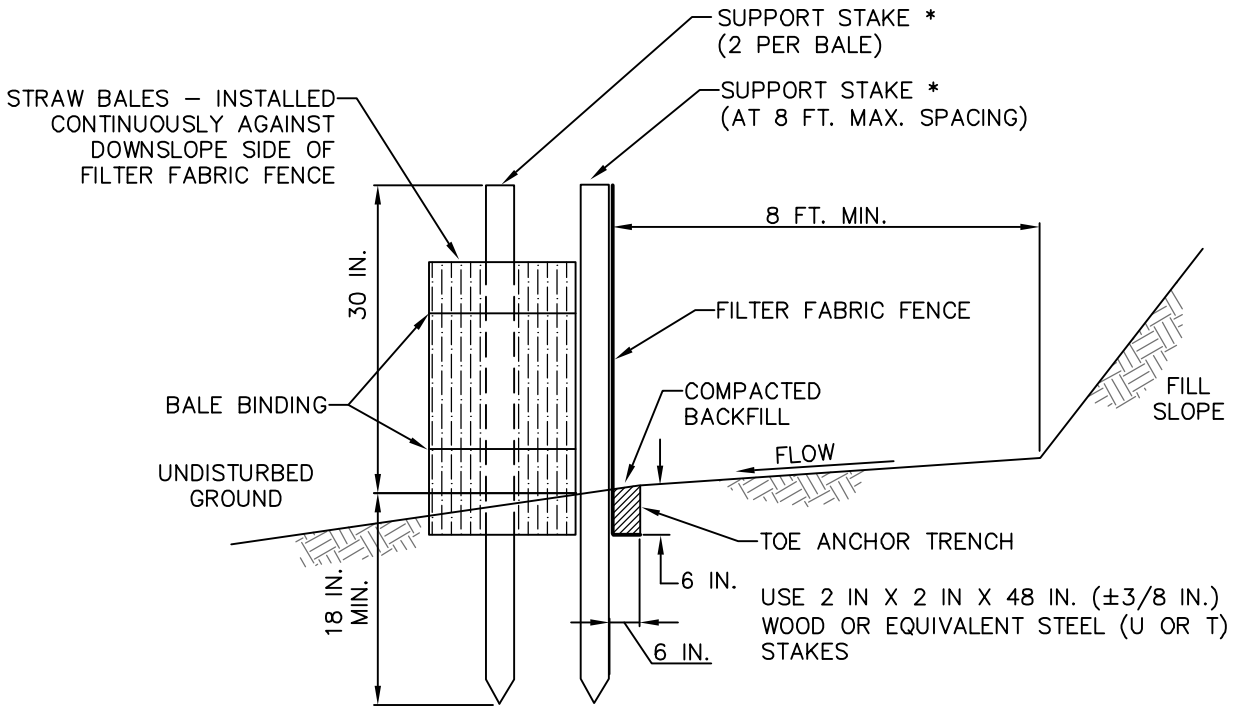

ELEVATION VIEW

NOTES:

FABRIC SHALL HAVE THE MINIMUM PROPERTIES AS SHOWN IN TABLE 4.3 OF THE PA DEP EROSION CONTROL MANUAL.

THIS BMP IS NOT SUITABLE FOR PROJECTS LASTING LONGER THAN 3 MONTHS UNLESS BALES ARE REPLACED QUARTERLY.

FABRIC WIDTH SHALL BE 42 IN. MINIMUM. STAKES SHALL BE HARDWOOD OR EQUIVALENT STEEL (U OR T) STAKES.

SILT FENCE SHALL BE PLACED AT LEVEL EXISTING GRADE. BOTH ENDS OF THE FENCE SHALL BE EXTENDED AT LEAST 8 FEET UP SLOPE AT 45 DEGREES TO THE MAIN FENCE ALIGNMENT.

SEDIMENT SHALL BE REMOVED WHEN ACCUMULATIONS REACH HALF THE ABOVE GROUND HEIGHT OF THE FENCE.

ANY SECTION OF SILT FENCE WHICH HAS BEEN UNDERMINED OR TOPPED SHALL BE IMMEDIATELY REPLACED WITH A ROCK FILTER OUTLET (STANDARD CONSTRUCTION DETAIL # 4–6).

FENCE SHALL BE REMOVED AND PROPERLY DISPOSED OF WHEN TRIBUTARY AREA IS PERMANENTLY STABILIZED.

STANDARD CONSTRUCTION DETAIL #4-9
SILT FENCE REINFORCED BY STAKED STRAW BALES

NOT TO SCALE

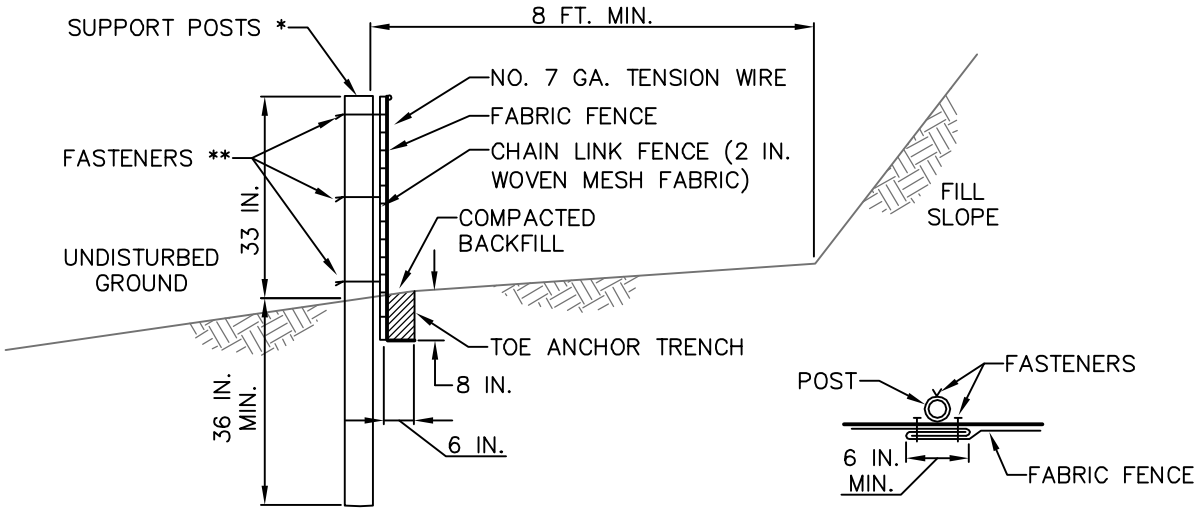

SECTION VIEW

JOINING FENCE SECTIONS

* POSTS SPACED AT 10 FT. MAX. USE 2-1/2 IN. DIA HEAVY DUTY GALVANIZED OR ALUMINUM POSTS.

** CHAIN LINK TO POST FASTENERS SPACED AT 14 IN. MAX. USE NO. 9 GA. ALUMINUM WIRE OR NO. 9 GALVANIZED STEEL WIRE. FABRIC TO SHAIN FASTENERS SPACED AT 24 IN. MAX. ON CENTER.

NOTES:

FABRIC SHALL HAVE THE MINIMUM PROPERTIES AS SHOWN IN TABLE 4.3 OF THE PA DEP EROSION CONTROL MANUAL.

FABRIC WIDTH SHALL BE 42 IN. MINIMUM.

POSTS SHALL BE INSTALLED USING A POSTHOLE DRILL.

CHAIN LINK SHALL BE GALVANIZED NO. 11.5 GA. STEEL WIRE WITH 2-1/4 IN. OPENING, NO. 11 GA. ALUMINUM COATED STEEL WIRE IN ACCORDANCE WITH ASTM-A-491, OR GALVANIZED NO. 9 GA. STEEL WIRE TOP AND BOTTOM WITH GALVANIZED NO. 11 GA. STEEL INTERMEDIATE WIRES. NO. 7 GAGE TENSION WIRE TO BE INSTALLED HORIZONTALLY THROUGH HOLES AT TOP AND BOTTOM OF CHAIN-LINK FENCE OR ATTACHED WITH HOG RINGS AT 5 FT MAX. CENTERS.

SILT FENCE SHALL BE PLACED AT LEVEL EXISTING GRADE. BOTH ENDS OF THE FENCE SHALL BE EXTENDED AT LEAST 8 FEET UP SLOPE AT 45 DEGREES TO THE MAIN FENCE ALIGNMENT.

SEDIMENT SHALL BE REMOVED WHEN ACCUMULATIONS REACH HALF THE ABOVE GROUND HEIGHT OF THE FENCE.

FENCE SHALL BE REMOVED AND PROPERLY DISPOSED OF WHEN TRIBUTARY AREA IS PERMANENTLY STABILIZED.

STANDARD CONSTRUCTION DETAIL #4-10

SUPER SILT FENCE

NOT TO SCALE

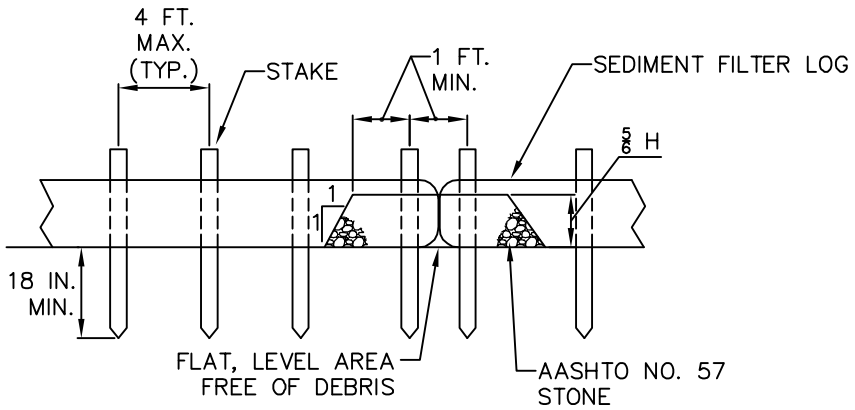

FRONT VIEW

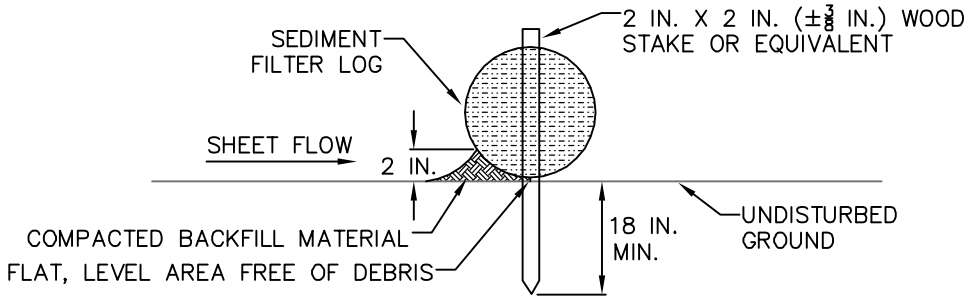

SECTION VIEW

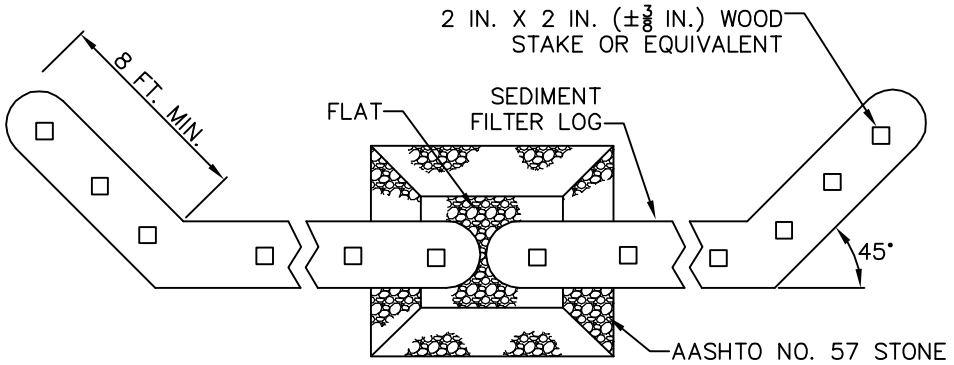

PLAN VIEW

NOTES:

SEDIMENT LOG PLACEMENT AREA SHALL BE PREPARED SO THAT IT IS FREE OF ALL DEBRIS, INCLUDING ROCKS, STICKS, ROOTS, ETC. A 2 IN. LAYER OF COMPACTED FILL MATERIAL SHALL BE PLACED ON THE UPSLOPE SIDE OF THE LOG TO PREVENT UNDERCUTTING. WHERE MORE THAN ONE LOG IS REQUIRED TO OBTAIN SPECIFIED LENGTH, LOGS SHALL BE TIGHTLY ABUTTED AND SECURELY STAKED (OR OVERLAPPED BY 12 IN. MIN.). A LAYER OF AASHTO NO. 57 STONE SHALL BE PLACED WHERE ABUTTING LOGS COME TOGETHER (EXTENDING 2 FT. ON BOTH SIDES OF THE LOG). A 6 IN. THICK LAYER OF COMPOST ON THE UPSLOPE SIDE MAY BE SUBSTITUTED FOR THE STONE. SEDIMENT FILTER LOGS SHALL BE PLACED AT EXISTING LEVEL GRADE. ENDS SHALL BE EXTENDED UPSLOPE AT 45 DEG. TO THE MAIN FILTER LOG ALIGNMENT FOR A MINIMUM OF 8 FEET.

SEDIMENT FILTER LOGS SHALL BE INSPECTED WEEKLY AND AFTER EACH RUNOFF EVENT. SEDIMENT DEPOSITS SHALL BE CLEANED FROM THE LOG WHEN IT REACHES HALF THE HEIGHT OF THE LOG. DAMAGED FILTER LOGS SHALL BE REPLACED WITHIN 24 HOURS OF INSPECTION. A SUPPLY OF FILTER LOGS SHALL BE MAINTAINED ON SITE FOR THIS PURPOSE.

STANDARD CONSTRUCTION DETAIL #4-11
SEDIMENT FILTER LOG (FIBER LOG)

NOT TO SCALE

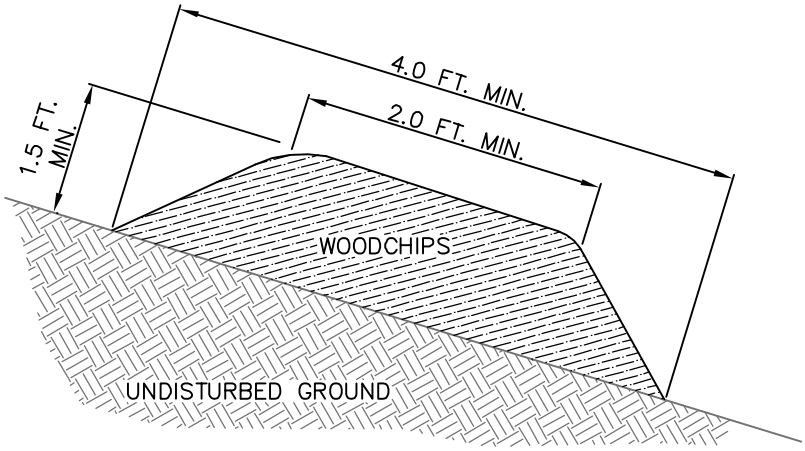

SECTION VIEW

NOTES:

PRIOR TO PLACEMENT OF THE BERM, OBSTRUCTIONS SUCH AS TREE LIMBS, LARGE ROCKS, ETC. SHALL BE REMOVED.

WOOD CHIP FILTER BERM SHALL BE PLACED AT EXISTING LEVEL GRADE. BOTH ENDS OF THE BERM SHALL BE EXTENDED AT LEAST 8 FEET UP SLOPE AT 45 DEGREES TO THE MAIN BERM ALIGNMENT. WOOD CHIP BERMS SHALL NOT BE LOCATED IN AREAS OF CONCENTRATED FLOW OR USED TO CONSTRUCT SEDIMENT TRAPS OR OTHER IMPOUNDMENTS.

A 6 IN. THICK LAYER OF COMPOST SHALL BE ADDED TO THE UPSLOPE SIDE OF ANY WOOD CHIP FILTER BERM LOCATED IN AN HQ WATERSHED. THIS BMP SHALL NOT BE ROUTINELY USED IN EV WATERSHEDS.

BERMS SHALL BE INSPECTED WEEKLY AND AFTER EACH RUNOFF EVENT. SEDIMENT SHALL BE REMOVED WHEN ACCUMULATIONS REACH HALF THE HEIGHT OF THE BERM. DAMAGED OR DETERIORATED PORTIONS OF THE BERM SHALL BE REPLACED IMMEDIATELY UPON INSPECTION.

BERMS MAY BE LEVELED WHEN THE TRIBUTARY AREA HAS BEEN PERMANENTLY STABILIZED OR LEFT IN PLACE.

STANDARD CONSTRUCTION DETAIL #4-12
WOOD CHIP FILTER BERM

NOT TO SCALE

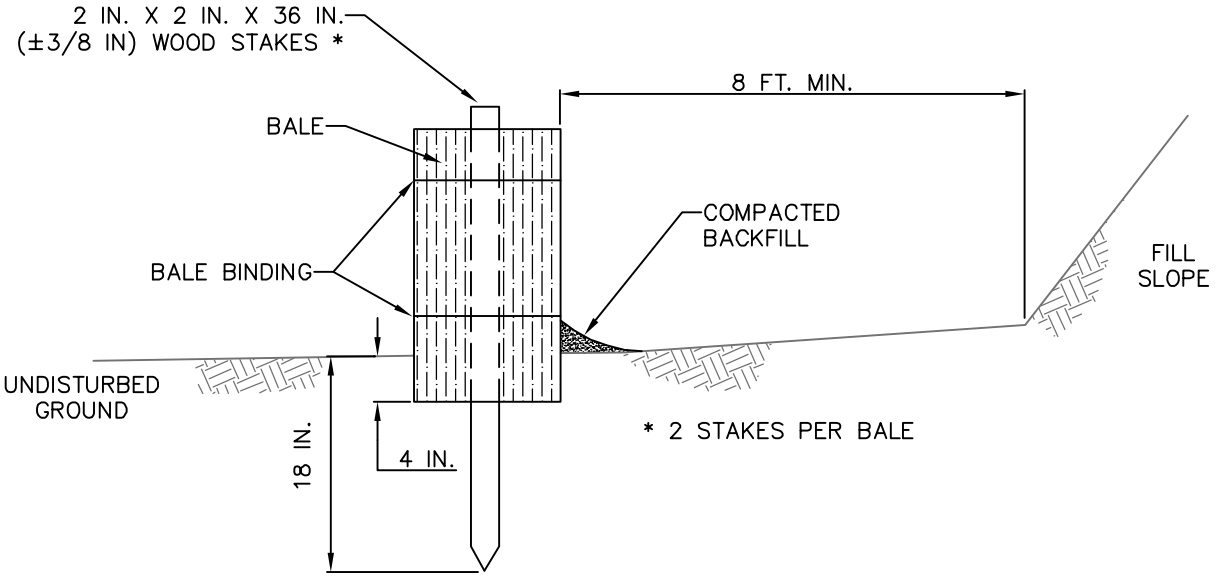

SECTION VIEW

NOTES:

STRAW BALE BARRIERS SHALL NOT BE USED FOR PROJECTS EXTENDING MORE THAN 3 MONTHS.

STRAW BALE BARRIERS SHALL BE PLACED AT EXISTING LEVEL GRADE WITH ENDS TIGHTLY ABUTTING THE ADJACENT BALES. FIRST STAKE OF EACH BALE SHALL BE ANGLED TOWARD ADJACENT BALE TO DRAW BALES TOGETHER. STAKES SHALL BE DRIVEN FLUSH WITH THE TOP OF THE BALE. BOTH ENDS OF THE BARRIER SHALL BE EXTENDED AT LEAST 8 FEET UP SLOPE AT 45 DEGREES TO THE MAIN BARRIER ALIGNMENT.

COMPACTED BACKFILL SHALL EXTEND APPROXIMATELY 4 IN. ABOVE GROUND LEVEL.

SEDIMENT SHALL BE REMOVED WHEN ACCUMULATIONS REACH 1/3 THE ABOVE GROUND HEIGHT OF THE BARRIER. DAMAGED OR DETERIORATED BALES SHALL BE REPLACED IMMEDIATELY UPON INSPECTION.

ANY SECTION OF STRAW BALE BARRIER WHICH HAS BEEN UNDERMINED OR TOPPED SHALL BE IMMEDIATELY REPLACED WITH A ROCK FILTER OUTLET (STANDARD CONSTRUCTION DETAIL #4–6).

BALES SHALL BE REMOVED WHEN THE TRIBUTARY AREA HAS BEEN PERMANENTLY STABILIZED.

STANDARD CONSTRUCTION DETAIL #4-13
STRAW BALE BARRIER

NOT TO SCALE

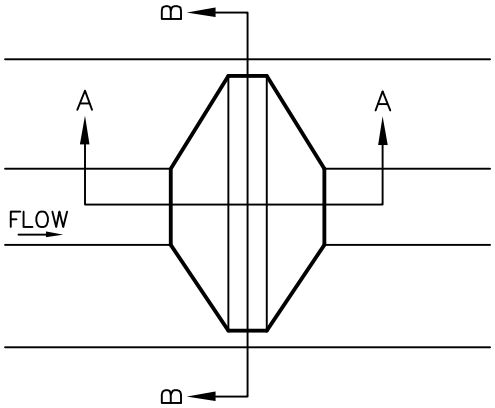

PLAN

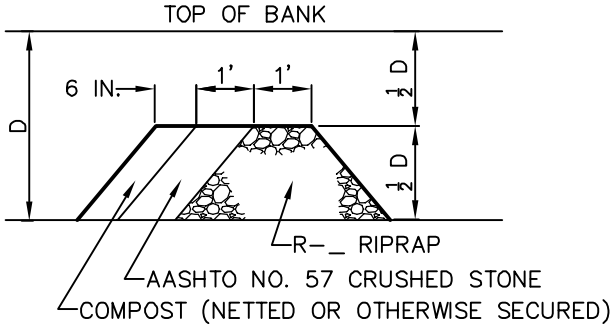

SECTION A–A

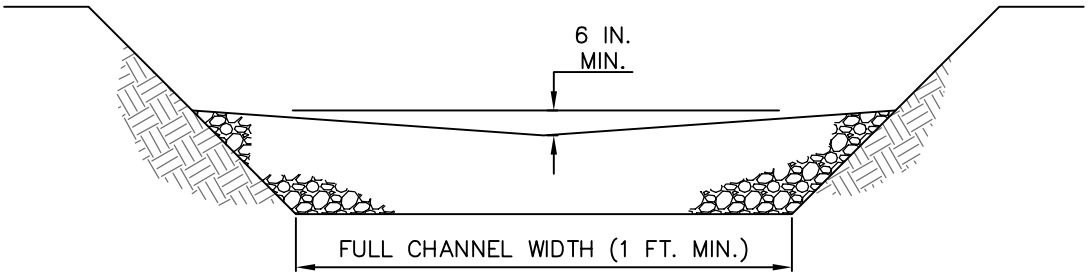

SECTION B–B

ROCK FILTER NO.	LOCATION	D (FT)	RIPRAP SIZE (R–_)
88	1234567890	88	8

FOR D ≥ 3 FT. – USE R–4
FOR D ≥ 2 FT. TO D < 3 FT. – USE R–3
NOT APPLICABLE FOR D < 2 FT.

NOTES:

SEDIMENT MUST BE REMOVED WHEN ACCUMULATIONS REACH 1/2 THE HEIGHT OF THE FILTERS.

IMMEDIATELY UPON STABILIZATION OF EACH CHANNEL, REMOVE ACCUMULATED SEDIMENT, REMOVE ROCK FILTER, AND STABILIZE DISTURBED AREAS.

STANDARD CONSTRUCTION DETAIL #4-14
ROCK FILTER

NOT TO SCALE

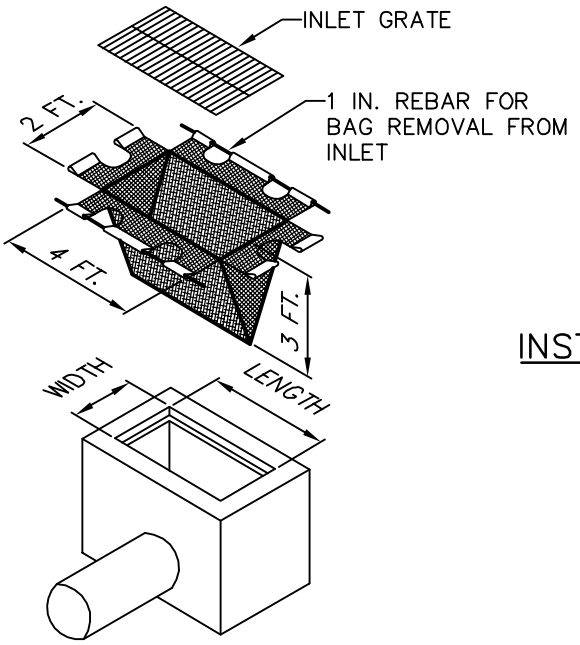

ISOMETRIC VIEW

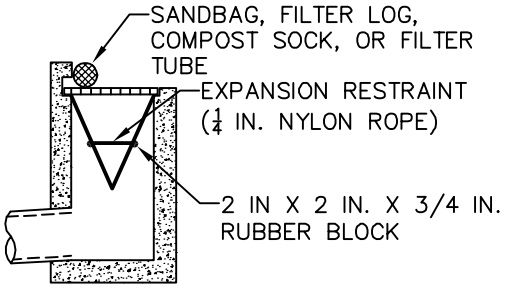

INSTALLATION DETAIL

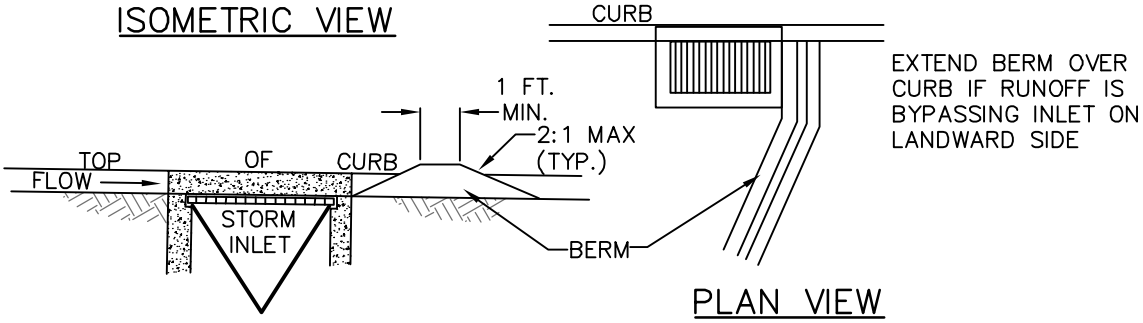

PLAN VIEW

SECTION VIEW

NOTES:

MAXIMUM DRAINAGE AREA = 1/2 ACRE.

INLET PROTECTION SHALL NOT BE REQUIRED FOR INLET TRIBUTARY TO SEDIMENT BASIN OR TRAP. BERMS SHALL BE REQUIRED FOR ALL INSTALLATIONS.

ROLLED EARTHEN BERM SHALL BE MAINTAINED UNTIL ROADWAY IS STONED. ROAD SUBBASE BERM SHALL BE MAINTAINED UNTIL ROADWAY IS PAVED. SIX INCH MINIMUM HEIGHT ASPHALT BERM SHALL BE MAINTAINED UNTIL ROADWAY SURFACE RECEIVES FINAL COAT.
AT A MINIMUM, THE FABRIC SHALL HAVE A MINIMUM GRAB TENSILE STRENGTH OF 120 LBS, A MINIMUM BURST STRENGTH OF 200 PSI, AND A MINIMUM TRAPEZOIDAL TEAR STRENGTH OF 50 LBS. FILTER BAGS SHALL BE CAPABLE OF TRAPPING ALL PARTICLES NOT PASSING A NO. 40 SIEVE.

INLET FILTER BAGS SHALL BE INSPECTED ON A WEEKLY BASIS AND AFTER EACH RUNOFF EVENT. BAGS SHALL BE EMPTIED AND RINSED OR REPLACED WHEN HALF FULL OR WHEN FLOW CAPACITY HAS BEEN REDUCED SO AS TO CAUSE FLOODING OR BYPASSING OF THE INLET. DAMAGED OR CLOGGED BAGS SHALL BE REPLACED. A SUPPLY SHALL BE MAINTAINED ON SITE FOR REPLACEMENT OF BAGS. ALL NEEDED REPAIRS SHALL BE INITIATED IMMEDIATELY AFTER THE INSPECTION. DISPOSE OF ACCUMULATED SEDIMENT AS WELL AS ALL USED BAGS ACCORDING TO THE PLAN NOTES.

DO NOT USE ON MAJOR PAVED ROADWAYS WHERE PONDING MAY CAUSE TRAFFIC HAZARDS.

STANDARD CONSTRUCTION DETAIL #4-15

FILTER BAG INLET PROTECTION - TYPE C INLET

NOT TO SCALE

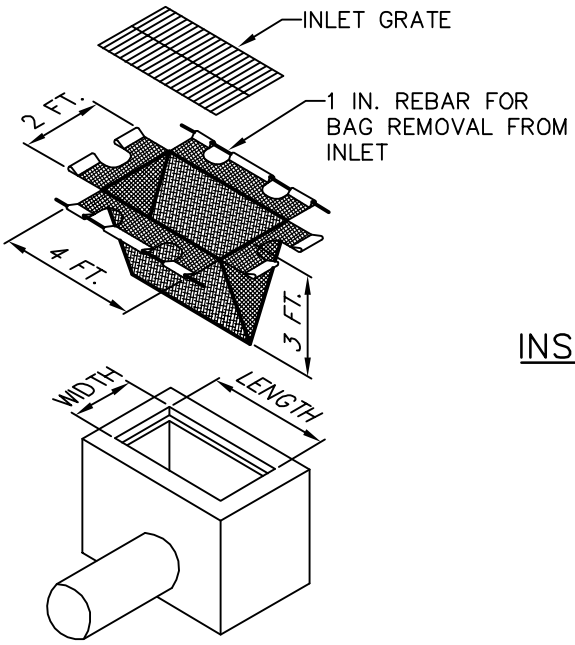

ISOMETRIC VIEW

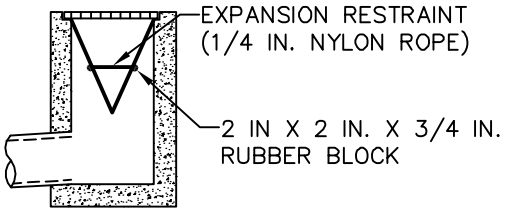

INSTALLATION DETAIL

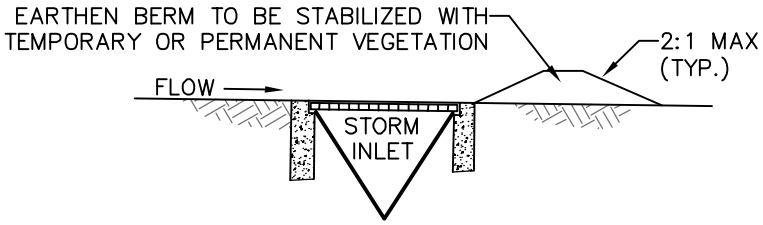

SECTION VIEW

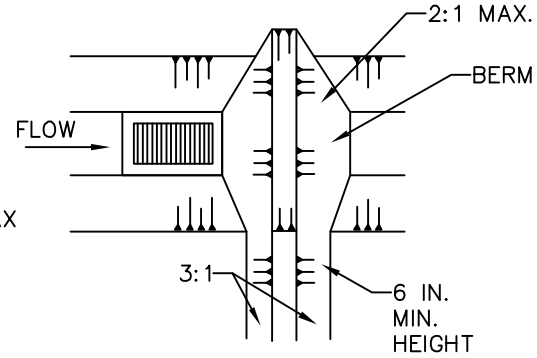

PLAN VIEW

NOTES:

MAXIMUM DRAINAGE AREA = 1/2 ACRE.

INLET PROTECTION SHALL NOT BE REQUIRED FOR INLET TRIBUTARY TO SEDIMENT BASIN OR TRAP. BERMS SHALL BE REQUIRED FOR ALL INSTALLATIONS.

ROLLED EARTHEN BERM IN ROADWAY SHALL BE MAINTAINED UNTIL ROADWAY IS STONED. ROAD SUBBASE BERM ON ROADWAY SHALL BE MAINTAINED UNTIL ROADWAY IS PAVED. EARTHEN BERM IN CHANNEL SHALL BE MAINTAINED UNTIL PERMANENT STABILIZATION IS COMPLETED OR REMAIN PERMANENTLY.

AT A MINIMUM, THE FABRIC SHALL HAVE A MINIMUM GRAB TENSILE STRENGTH OF 120 LBS., A MINIMUM BURST STRENGTH OF 200 PSI, AND A MINIMUM TRAPEZOIDAL TEAR STRENGTH OF 50 LBS. FILTER BAGS SHALL BE CAPABLE OF TRAPPING ALL PARTICLES NOT PASSING A NO. 40 SIEVE.

INLET FILTER BAGS SHALL BE INSPECTED ON A WEEKLY BASIS AND AFTER EACH RUNOFF EVENT. BAGS SHALL BE EMPTIED AND RINSED OR REPLACED WHEN HALF FULL OR WHEN FLOW CAPACITY HAS BEEN REDUCED SO AS TO CAUSE FLOODING OR BYPASSING OF THE INLET. DAMAGED OR CLOGGED BAGS SHALL BE REPLACED. A SUPPLY SHALL BE MAINTAINED ON SITE FOR REPLACEMENT OF BAGS. ALL NEEDED REPAIRS SHALL BE INITIATED IMMEDIATELY AFTER THE INSPECTION. DISPOSE ACCUMULATED SEDIMENT AS WELL AS ALL USED BAGS ACCORDING TO THE PLAN NOTES.

DO NOT USE ON MAJOR PAVED ROADWAYS WHERE PONDING MAY CAUSE TRAFFIC HAZARDS.

STANDARD CONSTRUCTION DETAIL #4-16
FILTER BAG INLET PROTECTION - TYPE M INLET

NOT TO SCALE

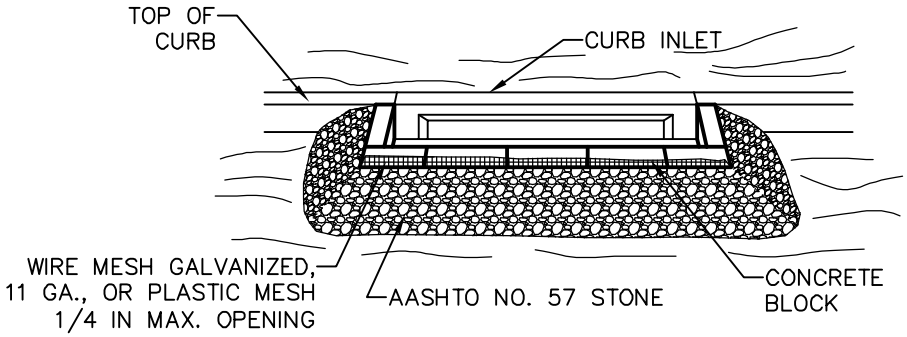

FRONT VIEW

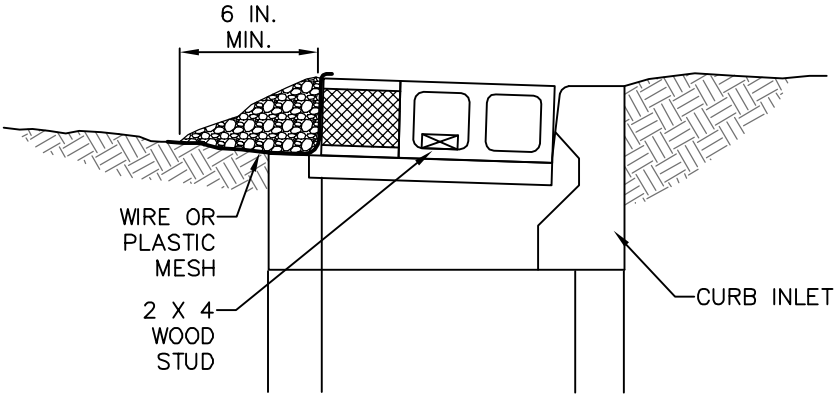

SECTION VIEW

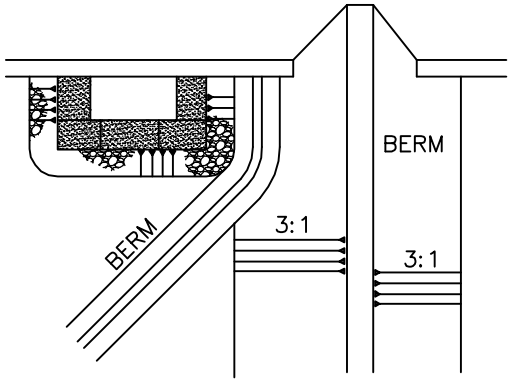

PLAN VIEW

NOTES:

MAXIMUM DRAINAGE AREA = 1 ACRE.

INLET PROTECTION SHALL NOT BE REQUIRED FOR INLET TRIBUTARY TO SEDIMENT BASIN OR TRAP. BERMS SHALL BE REQUIRED FOR ALL INSTALLATIONS.

ROLLED EARTHEN BERM SHALL BE PROVIDED AND MAINTAINED IMMEDIATELY DOWN GRADIENT OF THE PROTECTED INLET UNTIL ROADWAY IS STONED. ROAD SUBBASE BERM SHALL BE MAINTAINED UNTIL ROADWAY IS PAVED. SIX INCH MINIMUM HEIGHT ASPHALT BERM SHALL BE MAINTAINED UNTIL ROADWAY SURFACE RECEIVES FINAL COAT.

SEDIMENT SHALL BE REMOVED WHEN IT REACHES HALF THE HEIGHT OF THE STONE. DAMAGED OR CLOGGED INSTALLATIONS SHALL BE REPAIRED OR REPLACED IMMEDIATELY.

FOR SYSTEMS DISCHARGING TO HQ OR EV SURFACE WATER, A 6 INCH THICK COMPOST LAYER SHALL BE SECURELY ANCHORED ON OUTSIDE AND OVER TOP OF STONE.

DO NOT USE ON MAJOR PAVED ROADWAYS WHERE PONDING MAY CAUSE TRAFFIC HAZARDS.

STANDARD CONSTRUCTION DETAIL #4-17
STONE AND CONCRETE BLOCK INLET PROTECTION - TYPE C INLET

NOT TO SCALE

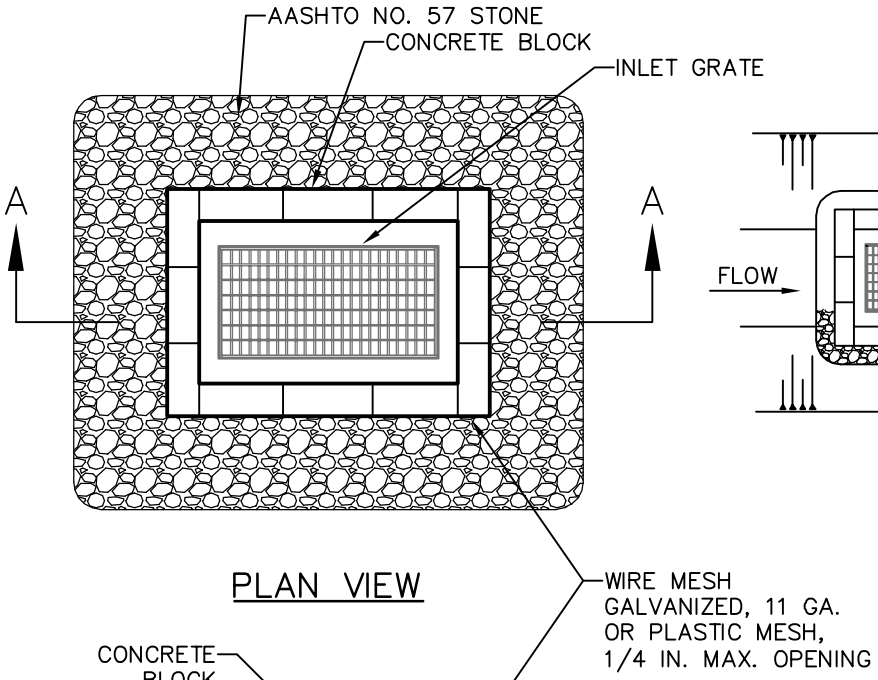

PLAN VIEW

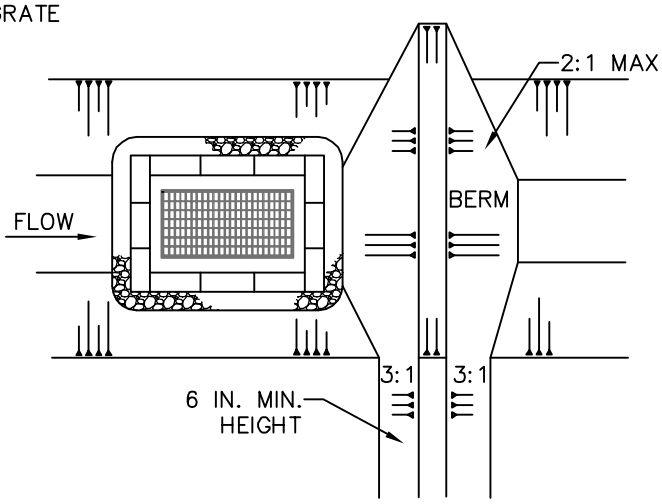

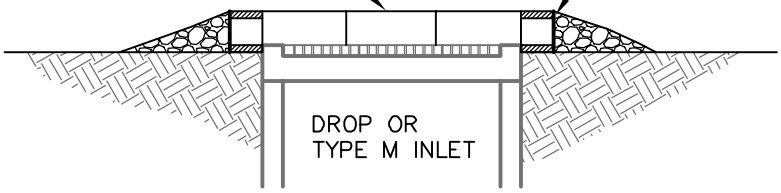

SECTION A–A

NOTES:

MAXIMUM DRAINAGE AREA =1 ACRE.

INLET PROTECTION SHALL NOT BE REQUIRED FOR INLET TRIBUTARY TO SEDIMENT BASIN OR TRAP. BERMS SHALL BE REQUIRED FOR ALL INSTALLATIONS NOT LOCATED AT A LOW POINT.

ROLLED EARTHEN BERM IN ROADWAY SHALL BE PROVIDED AND MAINTAINED IMMEDIATELY DOWN GRADIENT OF THE PROTECTED INLET UNTIL ROADWAY IS STONED. ROAD SUBBASE BERM ON ROADWAY SHALL BE MAINTAINED UNTIL ROADWAY IS PAVED. EARTHEN BERM IN CHANNEL SHALL BE MAINTAINED UNTIL PERMANENT STABILIZATION IS COMPLETED OR TO REMAIN PERMANENTLY.

TOP OF BLOCK SHALL BE AT LEAST 6 INCHES BELOW ADJACENT ROADS IF PONDED WATER WOULD POSE A SAFETY HAZARD TO TRAFFIC.

SEDIMENT SHALL BE REMOVED WHEN IT REACHES HALF THE HEIGHT OF THE STONE. DAMAGED OR CLOGGED INSTALLATIONS SHALL BE REPAIRED OR REPLACED IMMEDIATELY.

FOR SYSTEMS DISCHARGING TO HQ OR EV SURFACE WATER, A 6 INCH THICK COMPOST LAYER SHALL BE SECURELY ANCHORED ON OUTSIDE AND OVER TOP OF STONE. COMPOST SHALL MEET THE STANDARDS IN TABLE 4.2 OF THE PA DEP EROSION CONTROL MANUAL.

STANDARD CONSTRUCTION DETAIL #4-18

STONE AND CONCRETE BLOCK INLET PROTECTION - TYPE M INLET

NOT TO SCALE

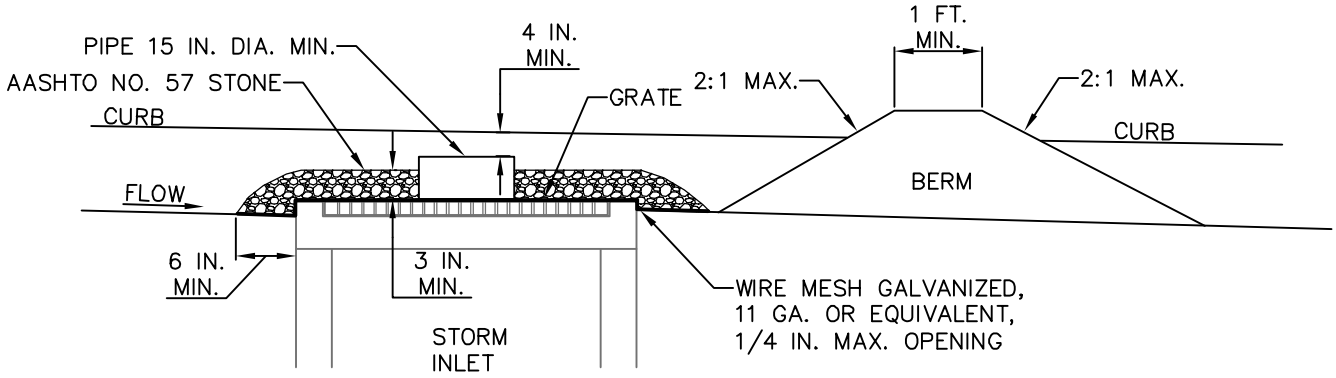

SECTION VIEW

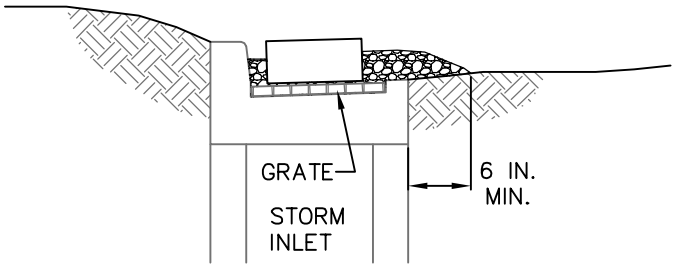

SECTION VIEW

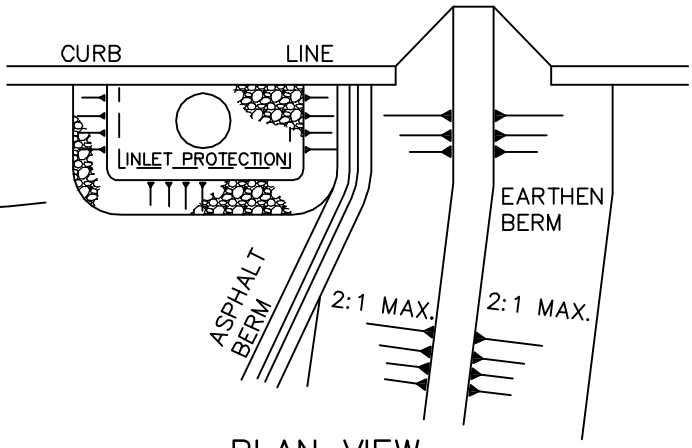

PLAN VIEW

NOTES:

INLET PROTECTION SHALL NOT BE REQUIRED FOR INLET TRIBUTARY TO SEDIMENT BASIN OR TRAP. BERMS SHALL BE REQUIRED FOR ALL INSTALLATIONS.

ROLLED EARTHEN BERM SHALL BE PROVIDED AND MAINTAINED IMMEDIATELY DOWN GRADIENT OF THE PROTECTED INLET UNTIL ROADWAY IS STONED. ROAD SUBBASE BERM SHALL BE MAINTAINED UNTIL ROADWAY IS PAVED. A 6 IN. MINIMUM HEIGHT ASPHALT BERM SHALL BE MAINTAINED UNTIL ROADWAY SURFACE RECEIVES FINAL COAT.

STONE INLET PROTECTION AND BERM FOR A TYPE C INLET CAN BE USED IN ONE ACRE MAXIMUM DRAINAGE AREA WITH 15 IN OVERFLOW PIPE AND 4 IN. HEAD. A PERFORATED PLATE WELDED TO A METAL RISER MAY NOT BE SUBSTITUTED FOR THE WIRE MESH. A SLOTTED PLATE WELDED TO THE RISER MAY BE USED IN CONJUNCTION WITH THE WIRE MESH IF CALCULATIONS ARE PROVIDED TO SHOW SUFFICIENT CAPACITY OF THE INLET TO ACCEPT THE PEAK RUNOFF FOR A 2-YEAR STORM EVENT FROM THE TRIBUTARY DRAINAGE AREA.

SEDIMENT SHALL BE REMOVED WHEN IT REACHES HALF THE HEIGHT OF THE STONE. DAMAGED OR CLOGGED INSTALLATIONS SHALL BE REPAIRED OR REPLACED IMMEDIATELY.

FOR SYSTEMS DISCHARGING TO HQ OR EV SURFACE WATER, A 6 IN. THICK COMPOST LAYER SHALL BE SECURELY ANCHORED ON OUTSIDE AND OVER TOP OF STONE. COMPOST SHALL MEET THE STANDARDS IN TABLE 4.2 OF THE PA DEP EROSION CONTROL MANUAL.

DO NOT USE ON MAJOR PAVED ROADWAYS WHERE PONDING MAY CAUSE TRAFFIC HAZARDS.

STANDARD CONSTRUCTION DETAIL #4-19
STONE INLET PROTECTION AND BERM - TYPE C INLET

NOT TO SCALE

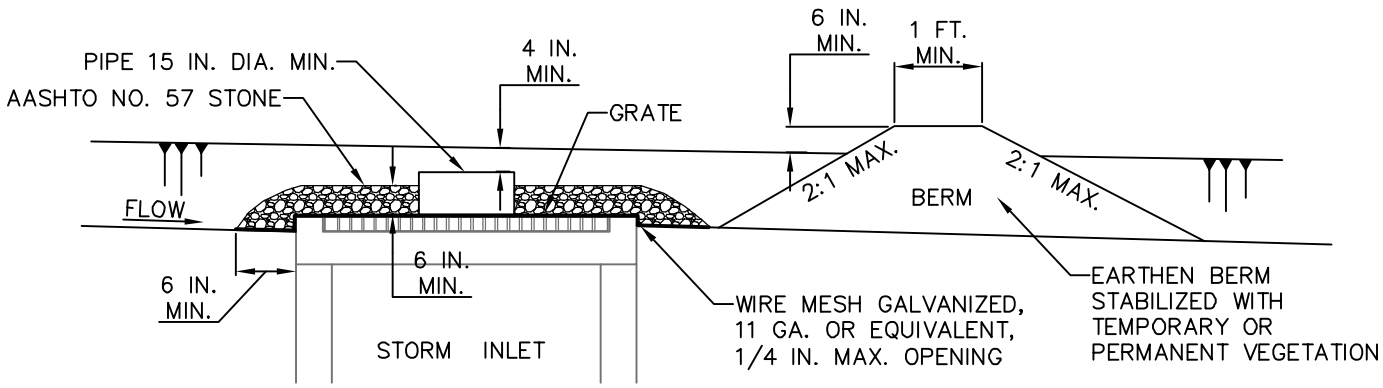

SECTION VIEW

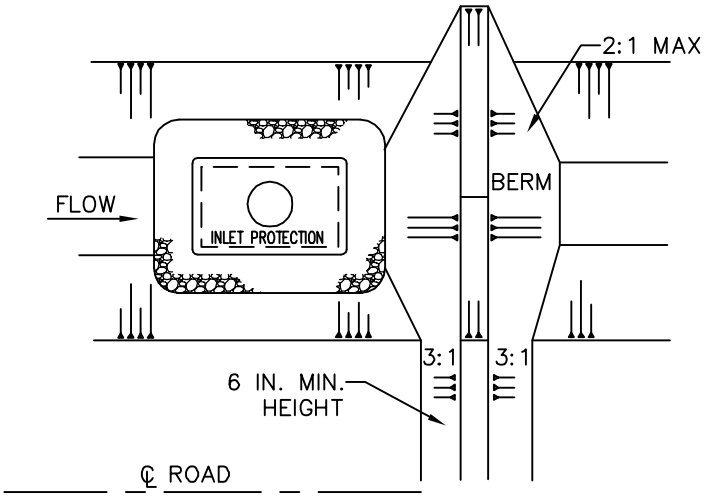

PLAN VIEW

NOTES:

INLET PROTECTION SHALL NOT BE REQUIRED FOR INLET TRIBUTARY TO SEDIMENT BASIN OR TRAP. BERMS SHALL BE REQUIRED FOR ALL INSTALLATIONS NOT LOCATED AT A LOW POINT.

ROLLED EARTHEN BERM IN ROADWAY SHALL BE PROVIDED AND MAINTAINED IMMEDIATELY DOWN GRADIENT OF THE PROTECTED INLET UNTIL ROADWAY IS STONED. ROAD SUBBASE BERM ON ROADWAY SHALL BE MAINTAINED UNTIL ROADWAY IS PAVED. EARTHEN BERM IN CHANNEL SHALL BE MAINTAINED UNTIL PERMANENT STABILIZATION IS COMPLETED OR TO REMAIN PERMANENTLY.

STONE INLET PROTECTION AND BERM FOR A TYPE M INLET CAN BE USED IN ONE ACRE MAXIMUM DRAINAGE AREA WITH 15 IN. OVERFLOW PIPE AND 4 IN. HEAD. A PERFORATED PLATE WELDED TO A METAL RISER MAY NOT BE SUBSTITUTED FOR THE WIRE MESH. A SLOTTED PLATE WELDED TO THE RISER MAY BE USED IN CONJUNCTION WITH THE WIRE MESH IF CALCULATIONS ARE PROVIDED TO SHOW SUFFICIENT CAPACITY OF THE INLET TO ACCEPT THE PEAK RUNOFF FOR A 2-YEAR STORM EVENT FROM THE TRIBUTARY DRAINAGE AREA. TOP OF PIPE SHALL BE AT LEAST 6 INCHES BELOW ADJACENT ROADWAY IF PONDED WATER WOULD POSE A SAFETY HAZARD TO TRAFFIC. EARTHEN BERM SHALL BE ROLLED.

SEDIMENT SHALL BE REMOVED WHEN IT REACHES HALF THE HEIGHT OF THE STONE. DAMAGED OR CLOGGED INSTALLATIONS SHALL BE REPAIRED OR REPLACED IMMEDIATELY.

FOR SYSTEMS DISCHARGING TO HQ OR EV SURFACE WATER, A 6 IN. THICK COMPOST LAYER SHALL BE SECURELY ANCHORED ON OUTSIDE AND OVER TOP OF STONE. COMPOST SHALL MEET THE STANDARDS IN TABLE 4.2 OF THE PA DEP EROSION CONTROL MANUAL.

DO NOT USE ON MAJOR PAVED ROADWAYS WHERE PONDING MAY CAUSE TRAFFIC HAZARDS.

STANDARD CONSTRUCTION DETAIL #4-20

STONE INLET PROTECTION AND BERM - TYPE M INLET

NOT TO SCALE

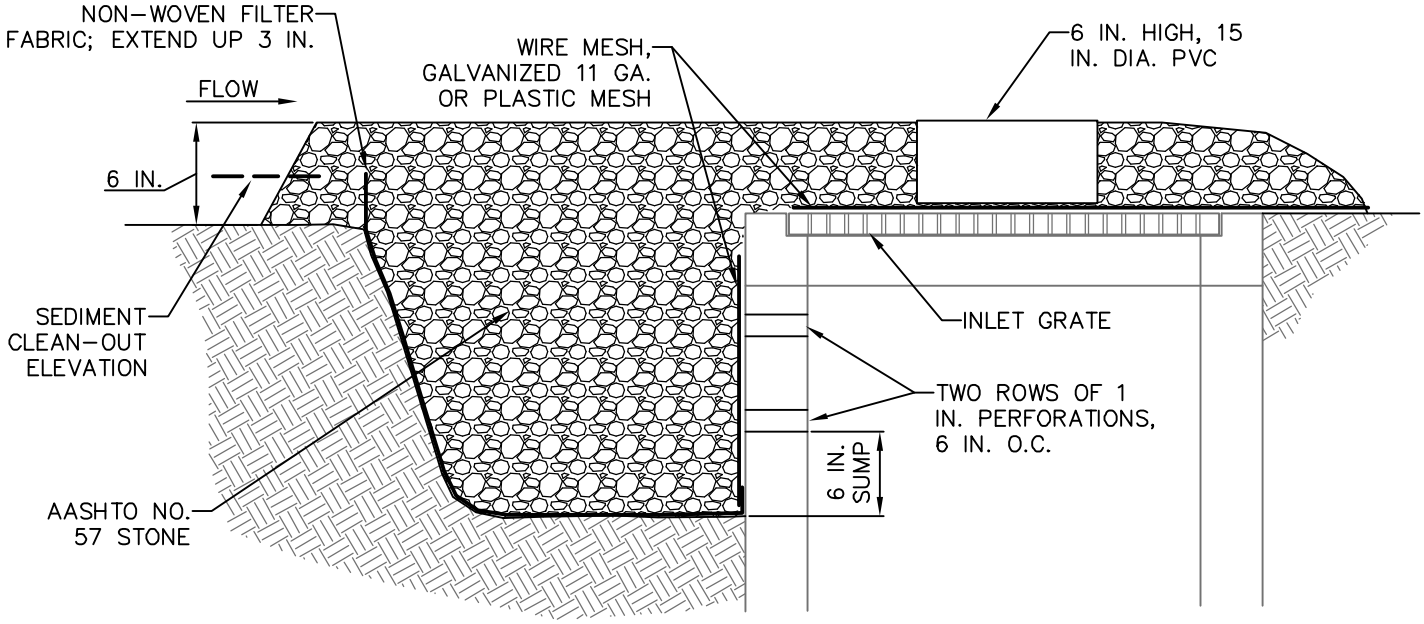

NOTES:

STONE PROTECTION SHALL NOT BE REQUIRED FOR INLET TRIBUTARY TO SEDIMENTATION BASINS AND SEDIMENT TRAPS.

SHOULD INCLUDE OPENINGS OF 1/4 IN. MAXIMUM FOR WIRE OR PLASTIC MESH.

HOLES MAY BE DRILLED IN CONCRETE BOX.

EARTHEN BERM IN ROADWAY SHALL NOT BE REQUIRED.

ALTERNATE STONE INLET PROTECTION FOR TYPE M INLET CAN BE USED ON ONE ACRE MAXIMUM DRAINAGE AREA WITH 15 IN. OVERFLOW PIPE AND 4 IN. HEAD.

SEDIMENT SHALL BE REMOVED WHEN IT REACHES HALF THE HEIGHT OF THE STONE. DAMAGED OR CLOGGED INSTALLATIONS SHALL BE REPAIRED OR REPLACED IMMEDIATELY.

FOR SYSTEMS DISCHARGING TO HQ OR EV SURFACE WATER, A 6 INCH THICK COMPOST LAYER SHALL BE SECURELY ANCHORED ON OUTSIDE AND OVER TOP OF STONE. COMPOST SHALL MEET THE STANDARDS IN TABLE 4.2 IF THE PA DEP EROSION CONTROL MANUAL.

STANDARD CONSTRUCTION DETAIL #4-21

ALTERNATE STONE INLET PROTECTION - TYPE M INLET - AT GRADE

NOT TO SCALE

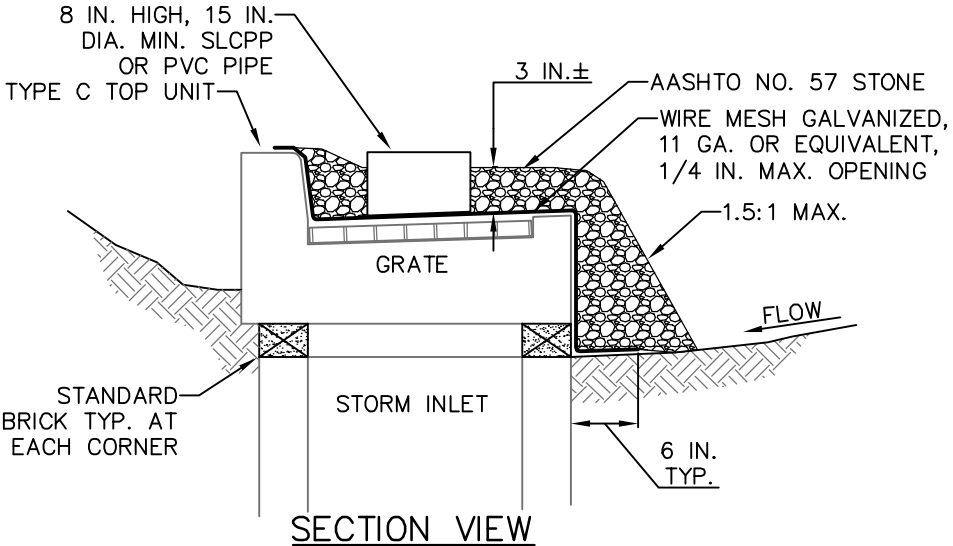

SECTION VIEW

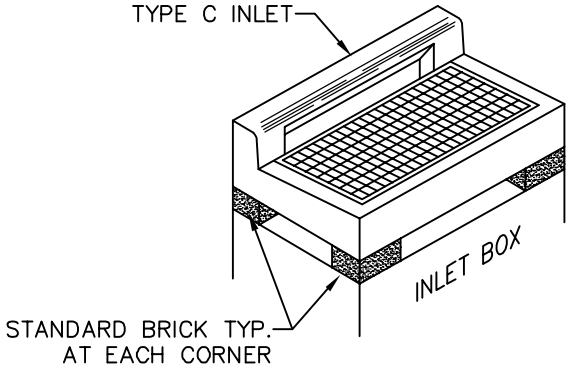

ISOMETRIC VIEW

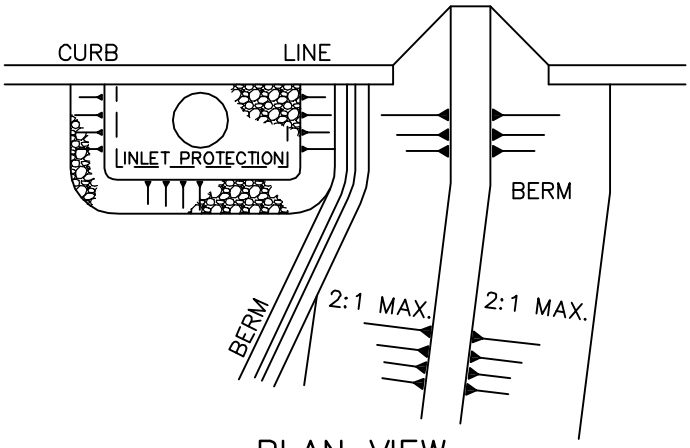

PLAN VIEW

NOTES:

INLET PROTECTION SHALL NOT BE REQUIRED FOR INLETS TRIBUTARY TO SEDIMENT BASINS OR SEDIMENT TRAPS. ALTERNATE TYPE C INLET PROTECTION CAN BE USED ON ONE ACRE MAXIMUM DRAINAGE AREA WITH 15 IN. OVERFLOW PIPE AND 4 IN. HEAD.

BERMS SHALL BE REQUIRED FOR ALL INSTALLATIONS NOT LOCATED AT LOW POINTS. EARTHEN BERMS SHALL BE STABILIZED WITH VEGETATION AND MAINTAINED UNTIL ROADWAY IS STONED OR TRIBUTARY AREA IS PERMANENTLY VEGETATED. ROAD SUBBASE BERMS SHALL BE MAINTAINED UNTIL ROADWAY IS PAVED.

INLETS SHALL BE INSPECTED WEEKLY AND AFTER EACH RUNOFF EVENT. ACCUMULATED SEDIMENT SHALL BE REMOVED WHEN IT REACHES HALF THE HEIGHT OF THE STONE. DAMAGED INSTALLATIONS SHALL BE REPAIRED OR REPLACED WITHIN 24 HOURS OF INSPECTION.

FOR SYSTEMS DISCHARGING TO HQ OR EV SURFACE WATER, A 6 INCH THICK COMPOST LAYER SHALL BE SECURELY ANCHORED ON OUTSIDE AND OVER TOP OF STONE. COMPOST SHALL MEET THE STANDARDS IN TABLE 4.2 OF THE PA DEP EROSION CONTROL MANUAL.

STANDARD CONSTRUCTION DETAIL #4-22
ALTERNATE TYPE C INLET PROTECTION - NOT AT GRADE

NOT TO SCALE

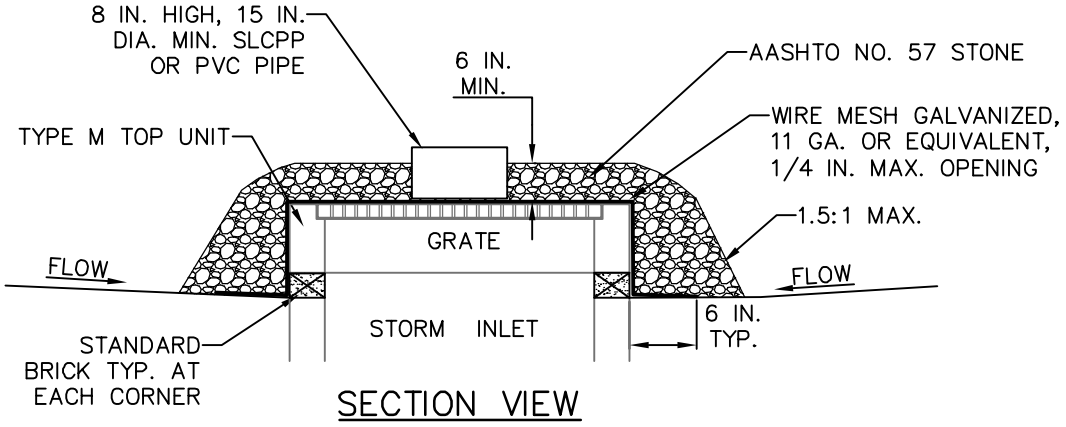

SECTION VIEW

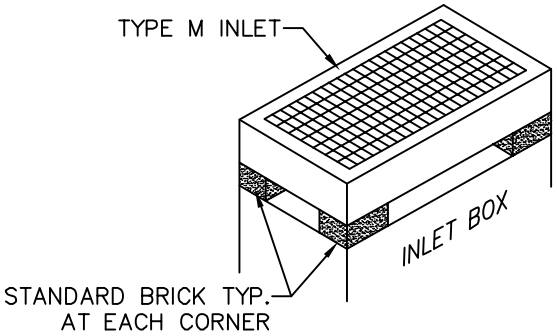

ISOMETRIC VIEW

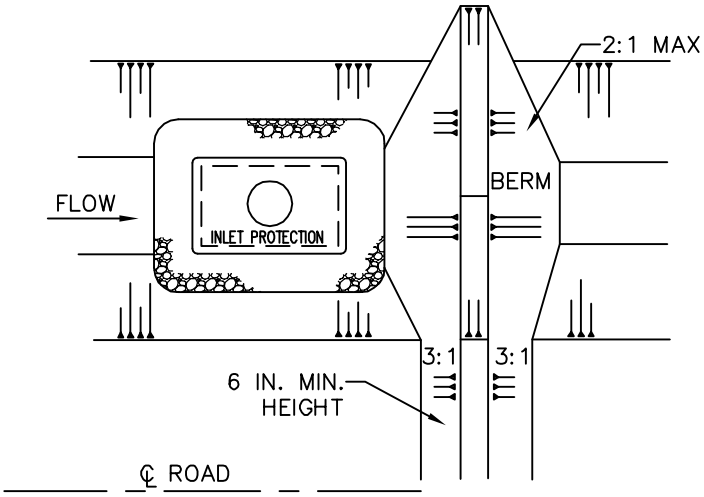

PLAN VIEW

NOTES:

INLET PROTECTION SHALL NOT BE REQUIRED FOR INLETS TRIBUTARY TO SEDIMENT BASINS OR SEDIMENT TRAPS. ALTERNATE TYPE C INLET PROTECTION CAN BE USED ON ONE ACRE MAXIMUM DRAINAGE AREA WITH 15 IN. OVERFLOW PIPE AND 4 IN. HEAD.

BERMS SHALL BE REQUIRED FOR ALL INSTALLATIONS NOT LOCATED AT LOW POINTS. EARTHEN BERMS SHALL BE STABILIZED WITH VEGETATION AND MAINTAINED UNTIL ROADWAY IS STONED OR TRIBUTARY AREA IS PERMANENTLY VEGETATED. ROAD SUBBASE BERMS SHALL BE MAINTAINED UNTIL ROADWAY IS PAVED.

INLETS SHALL BE INSPECTED WEEKLY AND AFTER EACH RUNOFF EVENT. ACCUMULATED SEDIMENT SHALL BE REMOVED WHEN IT REACHES HALF THE HEIGHT OF THE STONE. DAMAGED INSTALLATIONS SHALL BE REPAIRED OR REPLACED WITHIN 24 HOURS OF INSPECTION.

FOR SYSTEMS DISCHARGING TO HQ OR EV SURFACE WATER, A 6 INCH THICK COMPOST LAYER SHALL BE SECURELY ANCHORED ON OUTSIDE AND OVER TOP OF STONE. COMPOST SHALL MEET THE STANDARDS IN TABLE 4.2 OF THE PA DEP EROSION CONTROL MANUAL.

STANDARD CONSTRUCTION DETAIL #4-23
ALTERNATE TYPE M INLET PROTECTION - NOT AT GRADE

NOT TO SCALE

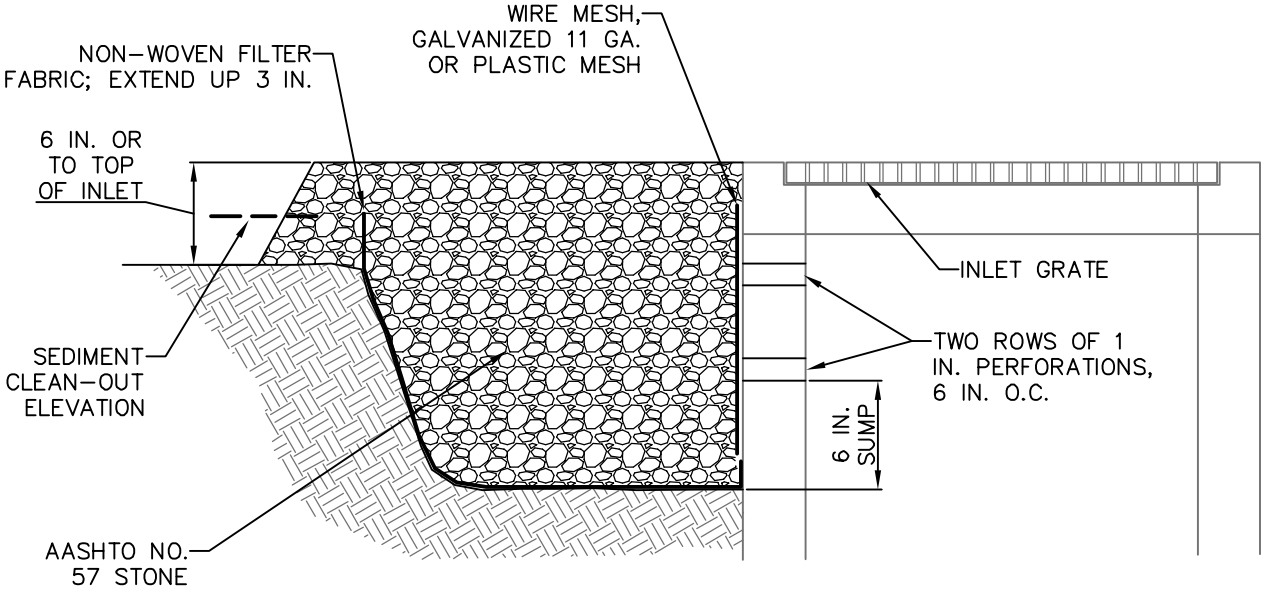

NOTES:

MAXIMUM DRAINAGE AREA =1 ACRE.

INLET PROTECTION SHALL NOT BE REQUIRED FOR INLET TRIBUTARY TO SEDIMENT BASIN OR TRAP. BERMS SHALL BE REQUIRED FOR ALL INSTALLATIONS NOT LOCATED AT A LOW POINT.

SHOULD CONTAIN OPENINGS 1/4 IN. MAXIMUM FOR WIRE OR PLASTIC MESH.

HOLES MAY BE DRILLED IN CONCRETE BOX.

EARTHEN BERM IN ROADWAY IS NOT REQUIRED.

SEDIMENT SHALL BE REMOVED WHEN IT REACHES HALF THE HEIGHT OF THE STONE. DAMAGED OR CLOGGED INSTALLATIONS SHALL BE REPAIRED OR REPLACED IMMEDIATELY.

FOR SYSTEMS DISCHARGING TO HQ OR EV SURFACE WATER, A 6 INCH THICK COMPOST LAYER SHALL BE SECURELY ANCHORED ON OUTSIDE AND OVER TOP OF STONE. COMPOST SHALL MEET THE STANDARDS IN TABLE 4.2 IF THE PA DEP EROSION CONTROL MANUAL.

STANDARD CONSTRUCTION DETAIL #4-24

ALTERNATE STONE INLET PROTECTION - TYPE M INLET - ABOVE GRADE

NOT TO SCALE

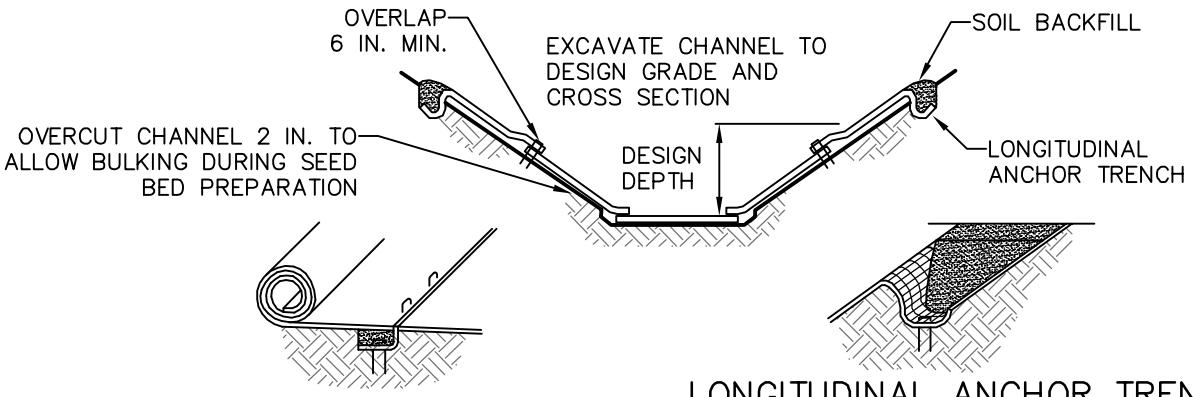

INTERMITTENT CHECK SLOT

LONGITUDINAL ANCHOR TRENCH

PREPARE SOIL AND APPLY SEED BEFORE INSTALLING BLANKETS, MATS, OR OTHER TEMPORARY CHANNEL LINER SYSTEM.

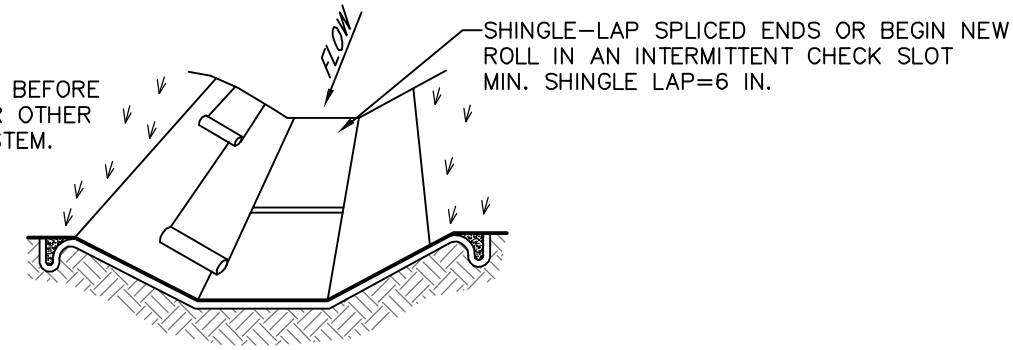

ISOMETRIC VIEW

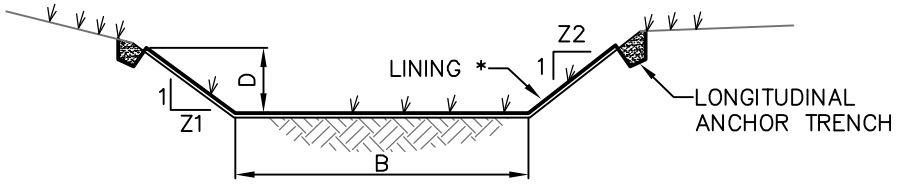

(LOOKING DOWNSTREAM)

CHANNEL CROSS-SECTION

* SEE MANUFACTURER'S LINING INSTALLATION DETAIL FOR STAPLE PATTERNS, VEGETATIVE STABILIZATION FOR SOIL AMENDMENTS, SEED MIXTURES AND MULCHING INFORMATION

CHANNEL NO.	STATIONS	BOTTOM WIDTH B (FT)	DEPTH D (FT)	TOP WIDTH W (FT)	Z1 (FT)	Z2 (FT)	LINING *
88	888+88 – 888+88	88	88	88	88	88	12345678901234567890

NOTES:

ANCHOR TRENCHES SHALL BE INSTALLED AT BEGINNING AND END OF CHANNEL IN THE SAME MANNER AS LONGITUDINAL ANCHOR TRENCHES.

CHANNEL DIMENSIONS SHALL BE CONSTANTLY MAINTAINED. CHANNEL SHALL BE CLEANED WHENEVER TOTAL CHANNEL DEPTH IS REDUCED BY 25% AT ANY LOCATION.
SEDIMENT DEPOSITS SHALL BE REMOVED WITHIN 24 HOURS OF DISCOVERY OR AS SOON AS SOIL CONDITIONS PERMIT ACCESS TO CHANNEL WITHOUT FURTHER DAMAGE. DAMAGED LINING SHALL BE REPAIRED OR REPLACED WITHIN 48 HOURS OF DISCOVERY.

NO MORE THAN ONE THIRD OF THE SHOOT (GRASS LEAF) SHALL BE REMOVED IN ANY MOWING. GRASS HEIGHT SHALL BE MAINTAINED BETWEEN 2 AND 3 INCHES UNLESS OTHERWISE SPECIFIED. EXCESS VEGETATION SHALL BE REMOVED FROM PERMANENT CHANNELS TO ENSURE SUFFICIENT CHANNEL CAPACITY.

STANDARD CONSTRUCTION DETAIL #6-1
VEGETATED CHANNEL

NOT TO SCALE

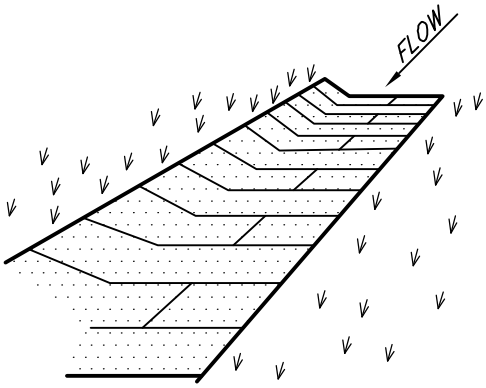

LAY SOD STRIPS PERPENDICULAR TO DIRECTION OF FLOW

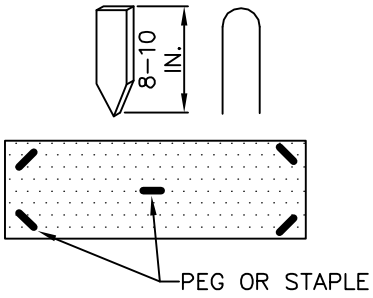

PEG/STAPLE DETAIL

SOD NOTES:

1. USE PEGS OR STAPLES TO FASTEN SOD FIRMLY AT THE END OF STRIPS AND IN THE CENTER, OR EVERY 3–4 FT IF THE STRIPS ARE LONG. WHEN READY TO MOW, DRIVE PEGS OR STAPLES FLUSH WITH THE GROUND.
2. IN CRITICAL AREAS, SECURE SOD WITH STAPLED NETTING.

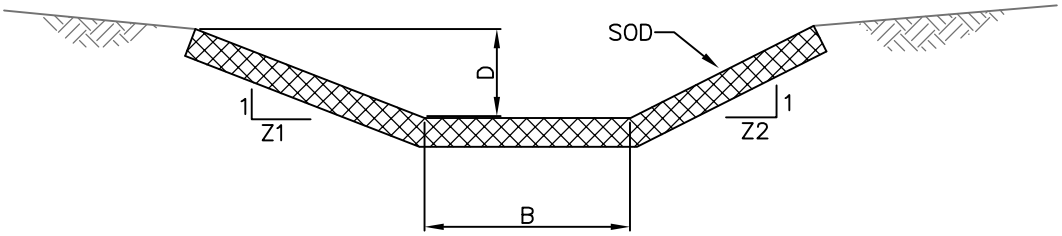

CHANNEL CROSS–SECTION

CHANNEL NO.	STATIONS	BOTTOM WIDTH B (FT)	DEPTH D (FT)	TOP WIDTH W (FT)	Z1 (FT)	Z2 (FT)
888	888+88 – 888+88	88	88	88	8	8

NOTES:

CARE SHALL BE TAKEN TO PREPARE THE SOIL ADEQUATELY PRIOR TO SOD PLACEMENT. PLANT SPECIES SHALL BE SUITABLE FOR THE ANTICIPATED PEAK FLOW VELOCITY.

DURING 2 TO 3 WEEK ESTABLISHMENT STAGE, SOD SHALL BE WATERED AS NECESSARY TO MAINTAIN ADEQUATE MOISTURE IN THE ROOT ZONE AND PREVENT DORMANCY OF SOD.

CHANNEL DIMENSIONS SHALL BE CONSTANTLY MAINTAINED. CHANNEL SHALL BE CLEANED WHENEVER TOTAL CHANNEL DEPTH IS REDUCED BY 25% AT ANY LOCATION. SEDIMENT DEPOSITS SHALL BE REMOVED WITHIN 24 HOURS OF DISCOVERY OR AS SOON AS SOIL CONDITIONS PERMIT ACCESS TO CHANNEL WITHOUT FURTHER DAMAGE. DAMAGED LINING SHALL BE REPAIRED OR REPLACED WITHIN 48 HOURS OF DISCOVERY.

NO MORE THAN ONE THIRD OF THE SHOOT (GRASS LEAF) SHALL BE REMOVED IN ANY MOWING. GRASS HEIGHT SHALL BE MAINTAINED BETWEEN 2 AND 3 INCHES UNLESS OTHERWISE SPECIFIED. EXCESS VEGETATION SHALL BE REMOVED FROM PERMANENT CHANNELS TO ENSURE SUFFICIENT CHANNEL CAPACITY.

STANDARD CONSTRUCTION DETAIL #6-2
SODDED CHANNEL

NOT TO SCALE

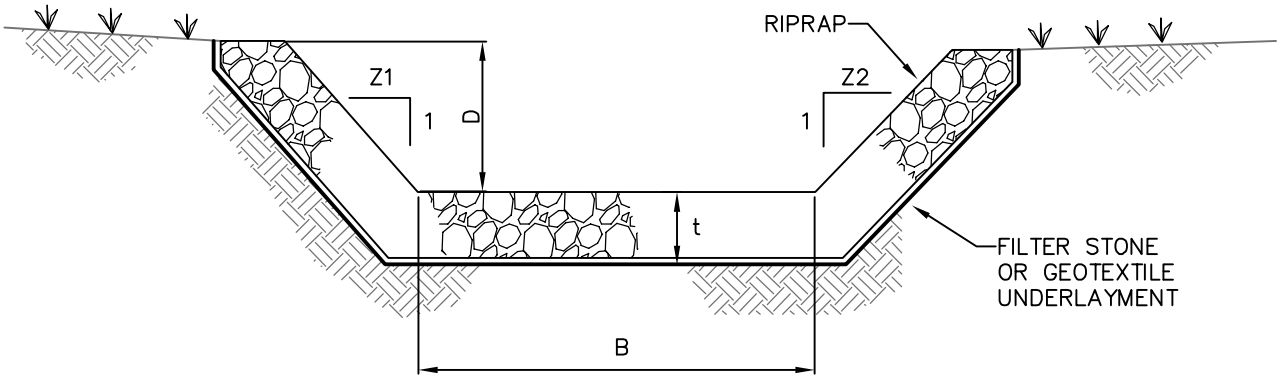

(LOOKING DOWNSTREAM)

CHANNEL CROSS–SECTION

CHANNEL NO.	STATIONS	BOTTOM WIDTH B (FT)	DEPTH D (FT)	Z1 (FT)	Z2 (FT)	RIPRAP GRADATION (R–_)	RIPRAP DEPTH t (IN)	UNDERLAYMENT	UNDER–LAYMENT THICKNESS
88	888+88 – 888+88	88	88	8	8	8	88	1234567890	88

NOTES:

FILTER STONE UNDERLAYMENT FOR BED SLOPES ≥ 0.10 FT/FT (10 %) SHALL BE USED.

CHANNEL DIMENSIONS ARE FOR THE COMPLETED CHANNEL AFTER ROCK PLACEMENT. CHANNEL MUST BE OVER–EXCAVATED A SUFFICIENT AMOUNT TO ALLOW FOR THE VOLUME OF ROCK PLACED WITHIN THE CHANNEL WHILE PROVIDING THE SPECIFIED FINISHED DIMENSIONS.

CHANNEL DIMENSIONS SHALL BE CONSTANTLY MAINTAINED. CHANNEL SHALL BE CLEANED WHENEVER TOTAL CHANNEL DEPTH IS REDUCED BY 25% AT ANY LOCATION. SEDIMENT DEPOSITS SHALL BE REMOVED WITHIN 24 HOURS OF DISCOVERY OR AS SOON AS SOIL CONDITIONS PERMIT ACCESS TO CHANNEL WITHOUT FURTHER DAMAGE.

DAMAGED LINING SHALL BE REPAIRED OR REPLACED WITHIN 48 HOURS OF DISCOVERY.

THE MINIMUM ROCK THICKNESS (t) SHALL BE 1.5 TIMES THE MAX ROCK SIZE.

STANDARD CONSTRUCTION DETAIL #6-3

RIPRAP CHANNEL

NOT TO SCALE

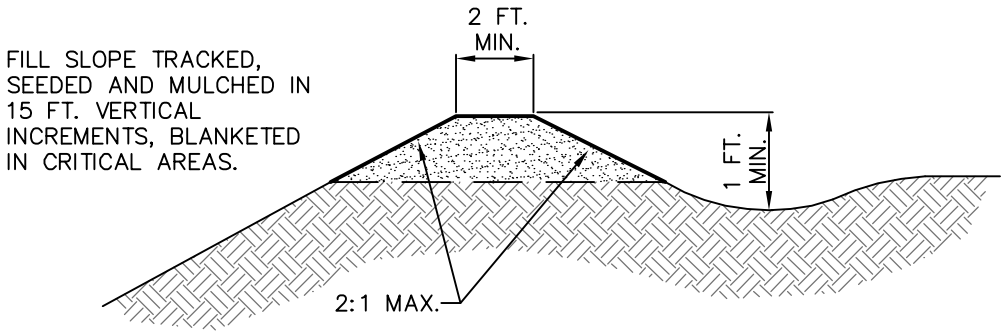

SECTION VIEW

NOTES:

TEMPORARY BERMS SHALL BE PLACED, MAINTAINED, AND ADJUSTED CONTINUOUSLY UNTIL 90% VEGETATIVE GROWTH IS ESTABLISHED ON THE EXTERIOR SLOPES WITH PERMANENT STORM DRAINAGE FACILITIES FUNCTIONING.

BERMS SHALL OUTLET TO SLOPE PIPES, CHANNELS, OR OTHER APPROVED MEANS OF CONVEYING RUNOFF TO A SEDIMENT TRAP, SEDIMENT BASIN, OR COLLECTOR CHANNEL.

CHANNEL BEHIND BERM SHALL HAVE POSITIVE GRADE TO OUTLET AND AN APPROPRIATE PROTECTIVE LINING.

BERM SHALL BE ADEQUATELY COMPACTED TO PREVENT FAILURE.

AN ACCEPTABLE ALTERNATIVE TO TOP-OF-SLOPE BERM IS TO CONTINUOUSLY GRADE THE TOP OF FILL TO DIRECT RUNOFF AWAY FROM THE FILLSLOPE TO A COLLECTOR CHANNEL, SEDIMENT TRAP, OR SEDIMENT BASIN.

STANDARD CONSTRUCTION DETAIL #6-4
TOP OF SLOPE BERM

NOT TO SCALE

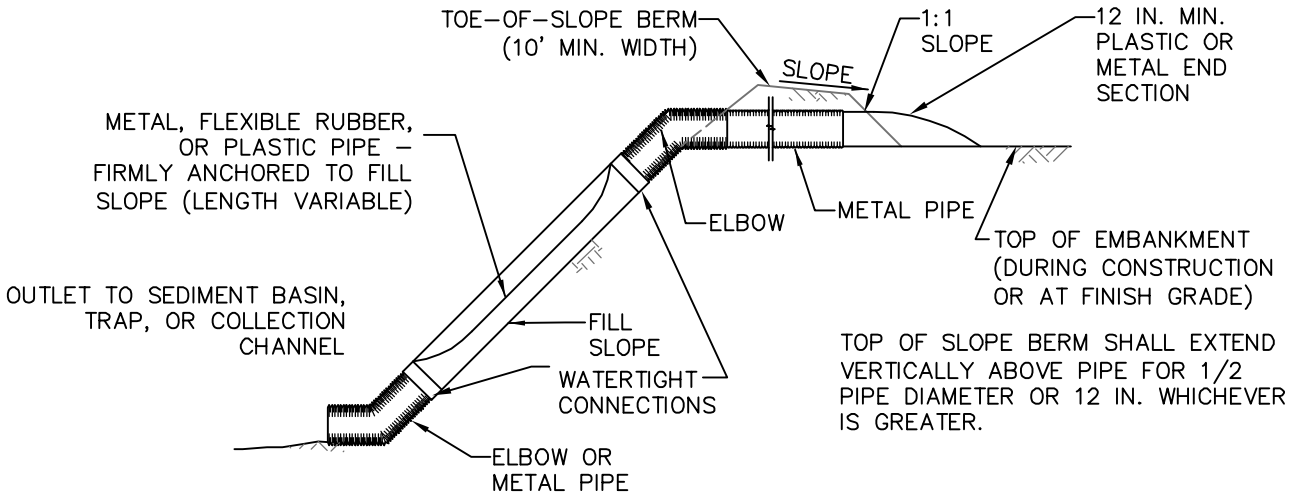

SLOPE PIPE WITH TRANSVERSE BERM

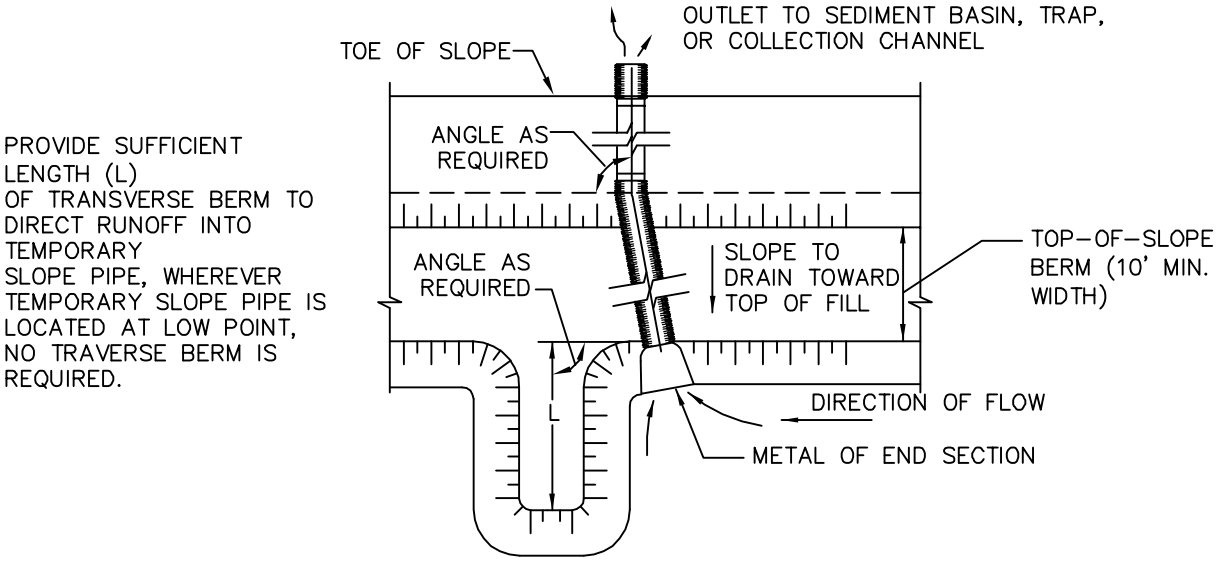

PLAN VIEW

SLOPE PIPE NO.	OUTLET PROTECTION TYPE	RIPRAP SIZE OR MATERIAL	APRON LENGTH (FT)	APRON WIDTH (FT)
88	1234567890	R-?	88	88

NOTES:

THE MAXIMUM DISTANCE BETWEEN ANCHOR STAKES SHALL BE 10 FEET.

TRANSVERSE BERM SHALL BE USED WHENEVER TEMPORARY SLOPE PIPE IS NOT LOCATED AT LOW POINT.

SLOPE PIPES SHALL BE INSPECTED WEEKLY AND AFTER EACH RUNOFF EVENT. ANY ACCUMULATED SEDIMENT SHALL BE REMOVED FROM THE INLET IMMEDIATELY.

DAMAGED PIPE SECTIONS SHALL BE REPLACED WITHIN 24 HOURS. LEAKING CONNECTIONS SHALL BE REPAIRED IMMEDIATELY.

STANDARD CONSTRUCTION DETAIL #6-5
TEMPORARY SLOPE PIPE

NOT TO SCALE

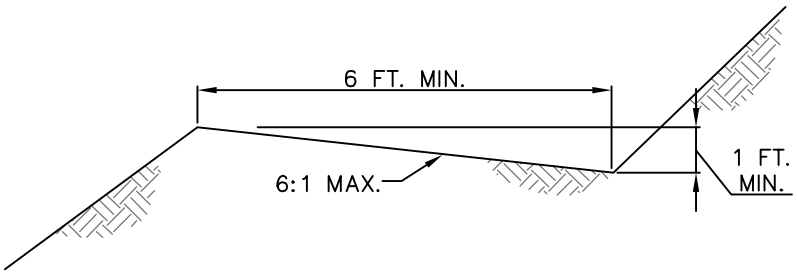

NOTES:

BENCHES SHALL BE INSPECTED ON A WEEKLY BASIS AND AFTER EACH RUNOFF EVENT.

BENCHES SHALL BE MAINTAINED TO DESIGN DIMENSIONS AT ALL TIMES.

NEEDED REPAIRS SHALL BE INITIATED IMMEDIATELY AFTER THE INSPECTION.

STANDARD CONSTRUCTION DETAIL #6-6

BENCH DETAIL

NOT TO SCALE

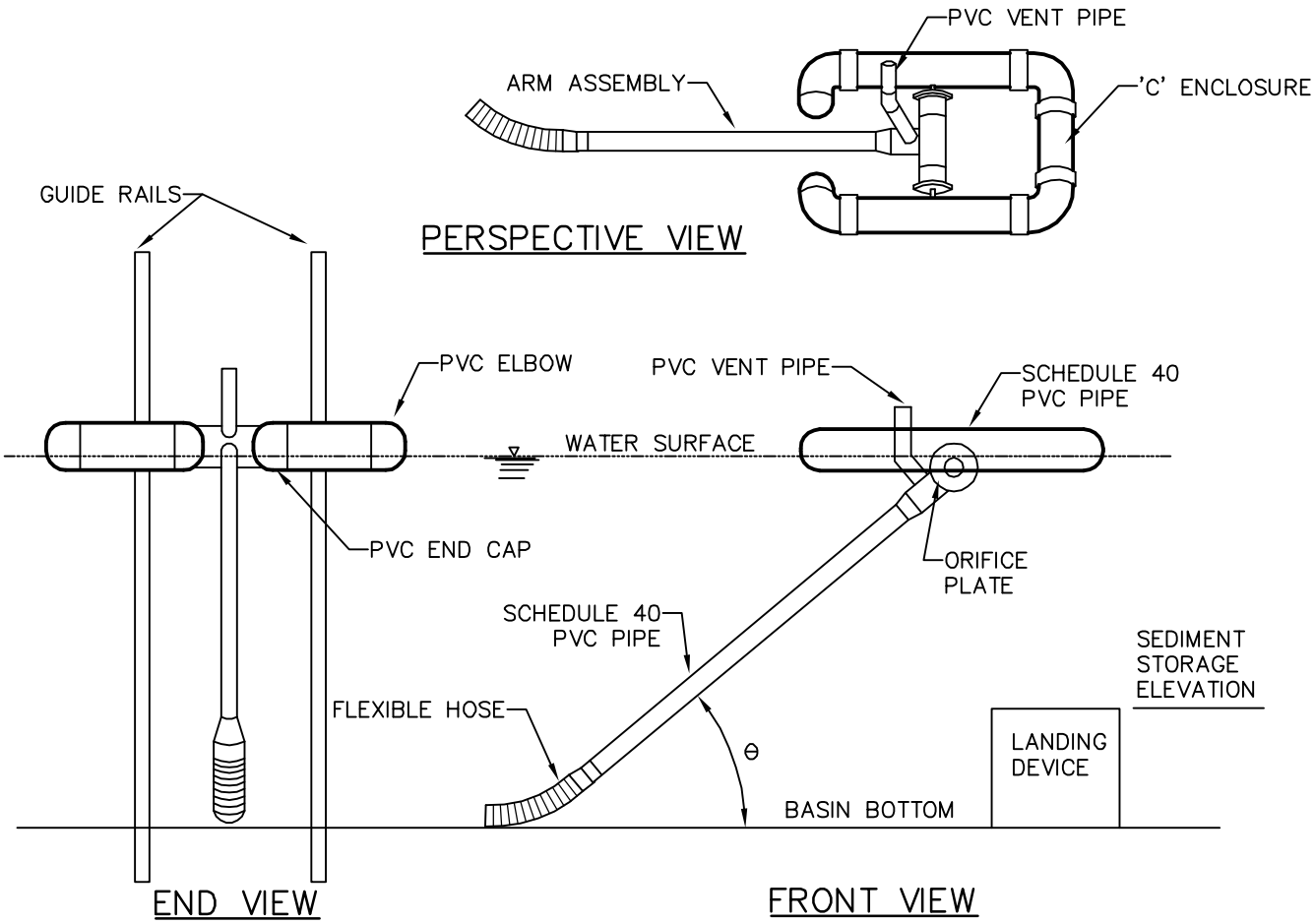

BASIN NO.	WATER SURFACE ELEVATION (FT)	ARM LENGTH (FT)	ARM DIA. (IN)	ORIFICE DIA. (IN)	TOP OF LANDING DEVICE ELEVATION (FT)	FLEXIBLE HOSE LENGTH (IN)	FLEXIBLE HOSE ATTACHMENT ELEVATION (FT)
88	8888.88	88	88	88	8888.88	88	8888.88

NOTES:

ORIFICE DIAMETER MUST BE EQUAL TO OR LESS THAN ARM DIAMETER

A ROPE SHALL BE ATTACHED TO THE SKIMMER ARM TO FACILITATE ACCESS TO THE SKIMMER ONCE INSTALLED.

SKIMMER SHALL BE INSPECTED WEEKLY AND AFTER EACH RUNOFF EVENT.
ANY MALFUNCTIONING SKIMMER SHALL BE REPAIRED OR REPLACED WITHIN 24 HOURS OF INSPECTION.

ICE OR SEDIMENT BUILDUP AROUND THE PRINCIPAL SPILLWAY SHALL BE REMOVED SO AS TO ALLOW THE SKIMMER TO RESPOND TO FLUCTUATING WATER ELEVATIONS.

SEDIMENT SHALL BE REMOVED FROM THE BASIN WHEN IT REACHES THE LEVEL MARKED ON THE SEDIMENT CLEAN-OUT STAKE OR THE TOP OF THE LANDING DEVICE.

A SEMI-CIRCULAR LANDING ZONE MAY BE SUBSTITUTED FOR THE GUIDE RAILS (STANDARD CONSTRUCTION DETAIL # 7-3).

STANDARD CONSTRUCTION DETAIL #7-1
SKIMMER

NOT TO SCALE

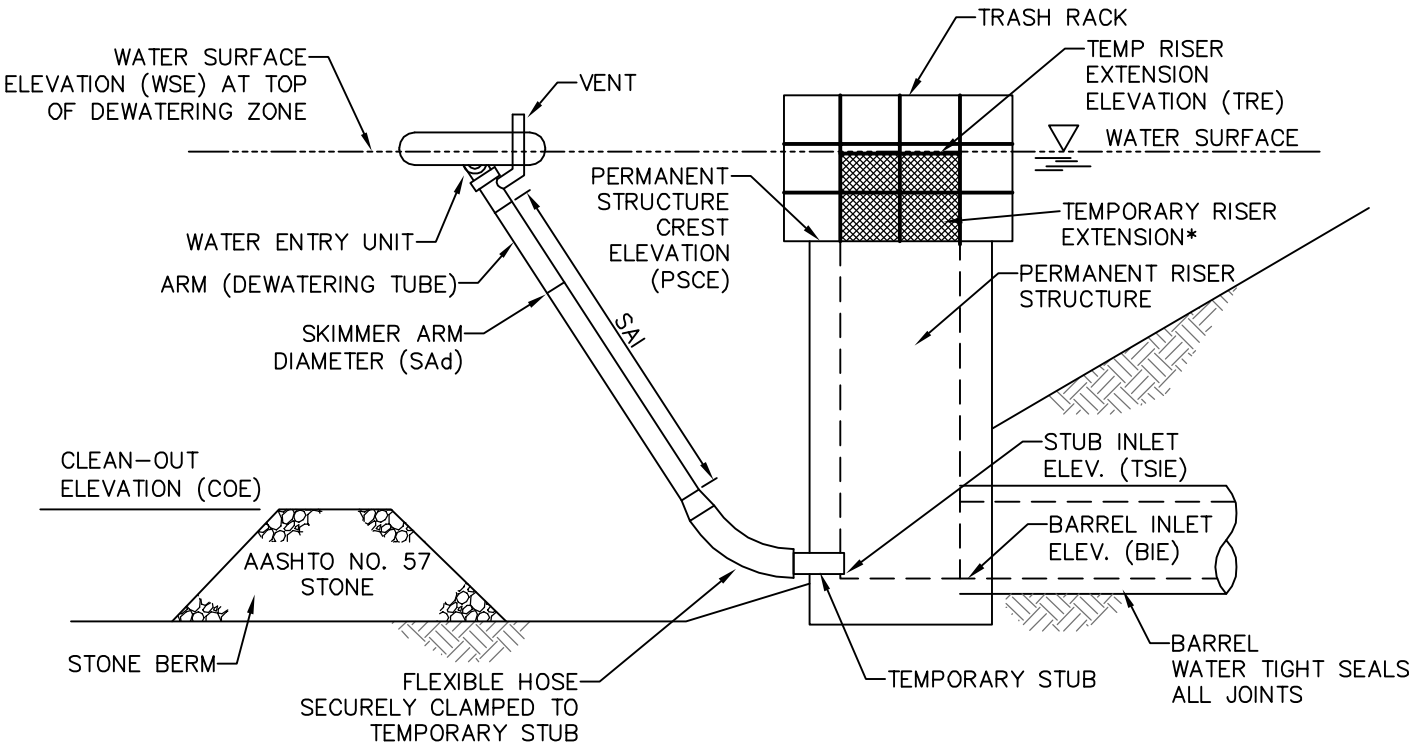

SECTION VIEW

BASIN NO.	WATER SURFACE ELEV. WSE (FT)	SKIMMER							
		ORIFICE		ARM			FLEXIBLE HOSE		
		DIA. (IN)	HEAD (FT)	DIA. SAd (IN)	LENGTH SAL (FT)	MAT'L	DIA. (IN)	LENGTH (IN)	MAT'L
88	8888.88	8.88	8.88	88	88	12345	88	88	12345

TEMPORARY STUB			PERMANENT RISER			RISER EXTENSION			BARREL
INSIDE DIA (IN)	INVERT ELEV TSIE (FT)	MAT'L	CREST ELEV PSCE (FT)	HORIZ OPENING		CREST ELEV TRE (FT)	HORIZ OPENING		INLET ELEV BIE (FT)
				LENGTH El (IN)	WIDTH Ew (IN)		LENGTH (IN)	WIDTH (IN)	
88	8888.88	12345	8888.88	88	88	8888.88	88	88	8888.88

NOTES:

ALL ORIFICES ON PERMANENT RISER BELOW TEMPORARY RISER EXTENSION SHALL HAVE WATER-TIGHT TEMPORARY SEALS PROVIDED. TEMPORARY STUB INVERT ELEVATION SHALL BE SET AT OR BELOW SEDIMENT CLEAN-OUT ELEVATION.

A ROPE SHALL BE ATTACHED TO THE SKIMMER ARM TO FACILITATE ACCESS TO THE SKIMMER ONCE INSTALLED.

SKIMMER SHALL BE INSPECTED WEEKLY AND AFTER EACH RUNOFF EVENT.
ANY MALFUNCTIONING SKIMMER SHALL BE REPAIRED OR REPLACED WITHIN 24 HOURS OF INSPECTION.

ICE OR SEDIMENT BUILDUP AROUND THE PRINCIPAL SPILLWAY SHALL BE REMOVED SO AS TO ALLOW THE SKIMMER TO RESPOND TO FLUCTUATING WATER ELEVATIONS.

SEDIMENT SHALL BE REMOVED FROM THE BASIN WHEN IT REACHES THE LEVEL MARKED ON THE SEDIMENT CLEAN-OUT STAKE OR THE TOP OF THE STONE BERM. SEE STANDARD CONSTRUCTION DETAIL #7-3 FOR CONFIGURATION OF STONE BERM.

STANDARD CONSTRUCTION DETAIL #7-2
SKIMMER ATTACHED TO PERMANENT RISER

NOT TO SCALE

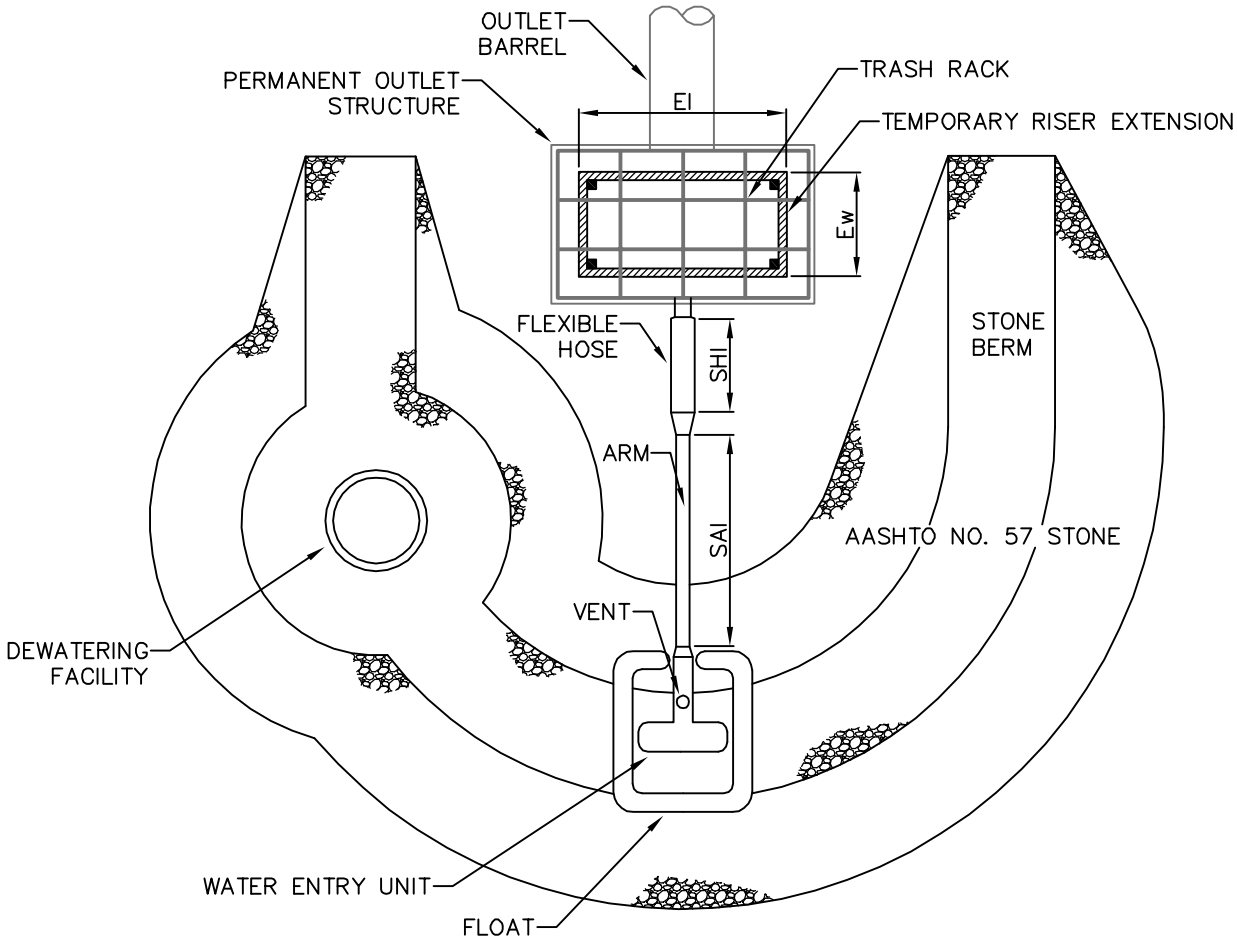

PLAN VIEW

NOTES:

NO GUIDE RAILS SHALL BE REQUIRED FOR THIS INSTALLATION.

THIS DETAIL SHALL BE USED IN CONJUNCTION WITH STANDARD CONSTRUCTION DETAILS #7–2 AND #7–4.

STANDARD CONSTRUCTION DETAIL #7-3
SKIMMER WITH STONE LANDING BERM

NOT TO SCALE

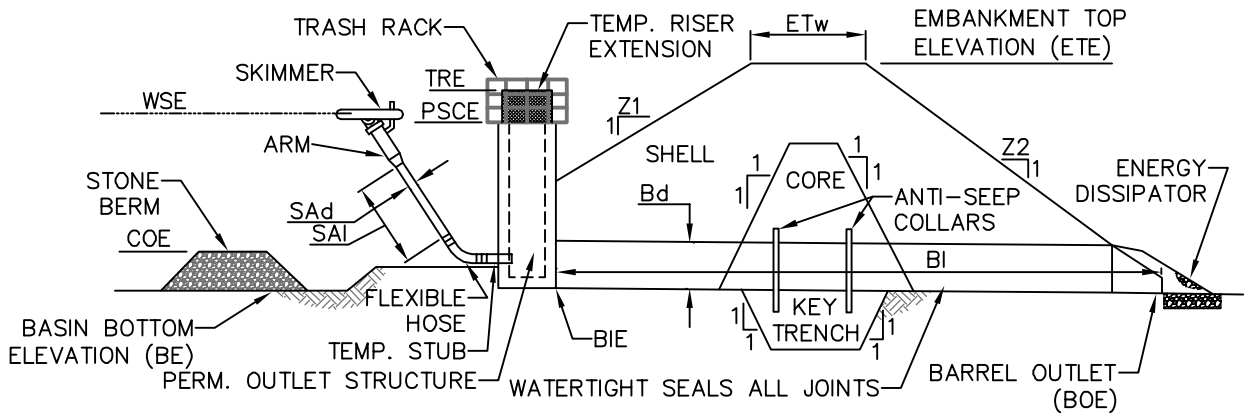

BASIN NO.	Z1 (FT)	Z2 (FT)	TEMP RISER EXT. ELEV TRE (FT)	EMBANKMENT				CLEAN OUT ELEV COE (FT)	BOTTOM ELEV BE (FT)
				TOP ELEV ETE (FT)	TOP WIDTH ETw (FT)	KEY TRENCH DEPTH (FT)	KEY TRENCH WIDTH (FT)		
88	88	88	8888.88	8888.88	88	88	88	8888.88	8888.88

SKIMMER			OUTLET BARREL				
DIA SAd (IN)	LENGTH SAi (FT)	MAT'L	DIA Bd (IN)	INLET ELEV BIE (FT)	MAT'L	LENGTH BI (FT)	OUTLET ELEV BOE (FT)
88	88.8	12345	888	8888.88	12345	888.8	8888.88

NOTES:

SEDIMENT BASINS, INCLUDING ALL APPURTENANT WORKS, SHALL BE CONSTRUCTED TO THE DETAIL AND DIMENSIONS SHOWN ON THE E&S PLAN DRAWINGS.

AREA UNDER EMBANKMENT SHALL BE CLEARED, GRUBBED, AND STRIPPED OF TOPSOIL TO A DEPTH OF TWO FEET PRIOR TO ANY PLACEMENT AND COMPACTION OF EARTHEN FILL. IN ORDER TO FACILITATE MAINTENANCE AND RESTORATION, THE POOL AREA SHALL BE CLEARED OF ALL BRUSH, TREES, AND OBJECTIONABLE MATERIAL. FILL MATERIAL FOR THE EMBANKMENTS SHALL BE FREE OF ROOTS, OR OTHER WOODY VEGETATION, ORGANIC MATERIAL, LARGE STONES, AND OTHER OBJECTIONABLE MATERIALS. THE EMBANKMENT SHALL BE COMPACTED IN LAYERED LIFTS OF NOT MORE THAN 6 TO 9 IN. THE MAXIMUM ROCK SIZE SHALL BE NO GREATER THAN 2/3 THE LIFT THICKNESS.

UPON COMPLETION, THE EMBANKMENT SHALL BE SEEDED, MULCHED, BLANKETED OR OTHERWISE STABILIZED ACCORDING TO THE SPECIFICATIONS OF THE E&S PLAN DRAWINGS. TREES SHALL NOT BE PLANTED ON THE EMBANKMENT.

INSPECT ALL SEDIMENT BASINS ON AT LEAST A WEEKLY BASIS AND AFTER EACH RUNOFF EVENT. PROVIDE ACCESS FOR SEDIMENT REMOVAL AND OTHER REQUIRED MAINTENANCE ACTIVITIES. A CLEAN OUT STAKE SHALL BE PLACED NEAR THE CENTER OF EACH BASIN. ACCUMULATED SEDIMENT SHALL BE REMOVED WHEN IT HAS REACHED THE CLEAN OUT ELEVATION ON THE STAKE AND THE BASIN RESTORED TO ITS ORIGINAL DIMENSIONS. DISPOSE OF MATERIALS REMOVED FROM THE BASIN IN THE MANNER DESCRIBED IN THE E&S PLAN.

BASIN EMBANKMENTS, SPILLWAYS, AND OUTLETS SHALL BE INSPECTED FOR EROSION, PIPING AND SETTLEMENT. NECESSARY REPAIRS SHALL BE IMMEDIATELY. DISPLACED RIPRAP WITHIN THE OUTLET ENERGY DISSIPATER SHALL BE REPLACED IMMEDIATELY.

ACCUMULATED SEDIMENT SHALL BE REMOVED AND DISTURBED AREAS SHALL BE STABILIZED INSIDE THE BASIN BEFORE CONVERSION TO A STORMWATER MANAGEMENT FACILITY. THE DEVICE SHOWN IN STANDARD CONSTRUCTION DETAIL #7-16 MAY BE USED TO DEWATER SATURATED SEDIMENT PRIOR TO ITS REMOVAL. ROCK FILTERS SHALL BE ADDED AS NECESSARY.

STANDARD CONSTRUCTION DETAIL #7-4

SEDIMENT BASIN EMBANKMENT AND SPILLWAY DETAILS - SKIMMER

NOT TO SCALE

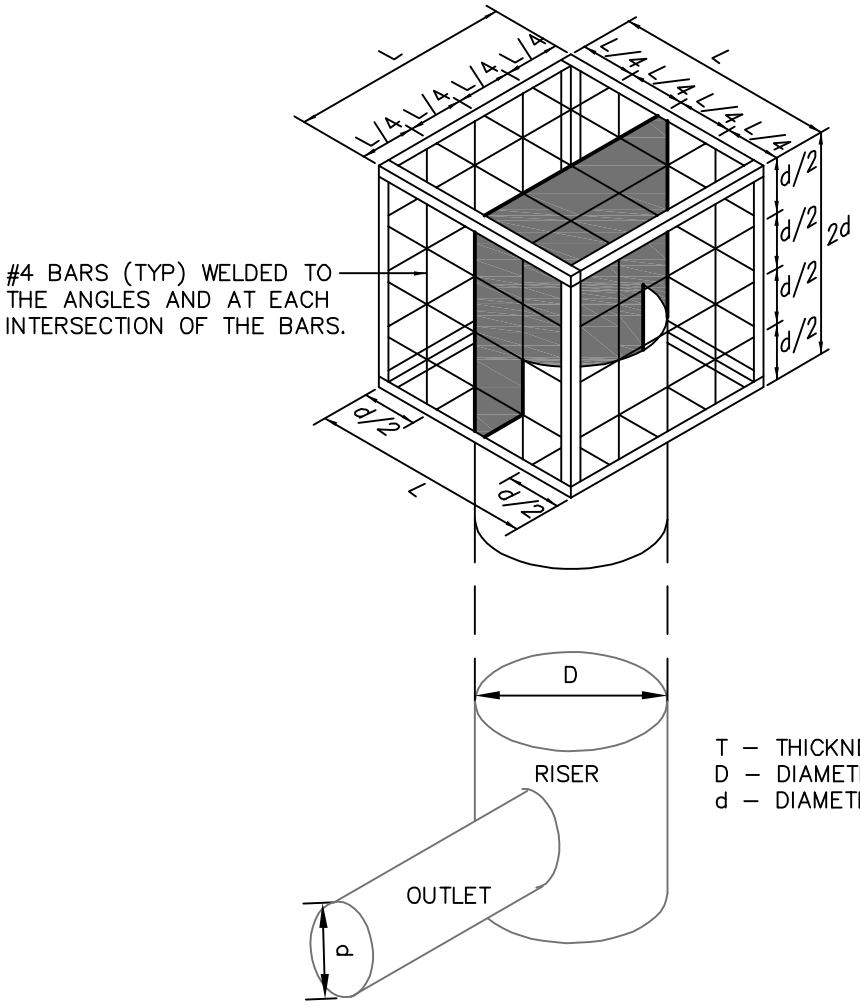

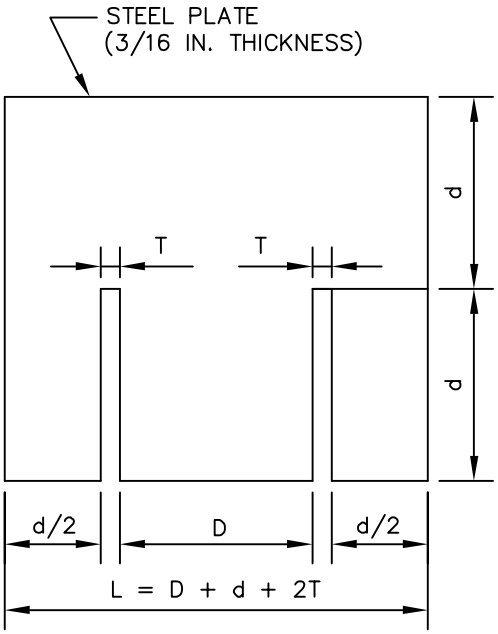

ANTI–VORTEX DEVICE

T – THICKNESS OF RISER PIPE
D – DIAMETER OF RISER PIPE
d – DIAMETER OF OUTLET PIPE

STANDARD CONSTRUCTION DETAIL #7-5
TRASH RACK AND ANTI-VORTEX DEVICE

NOT TO SCALE

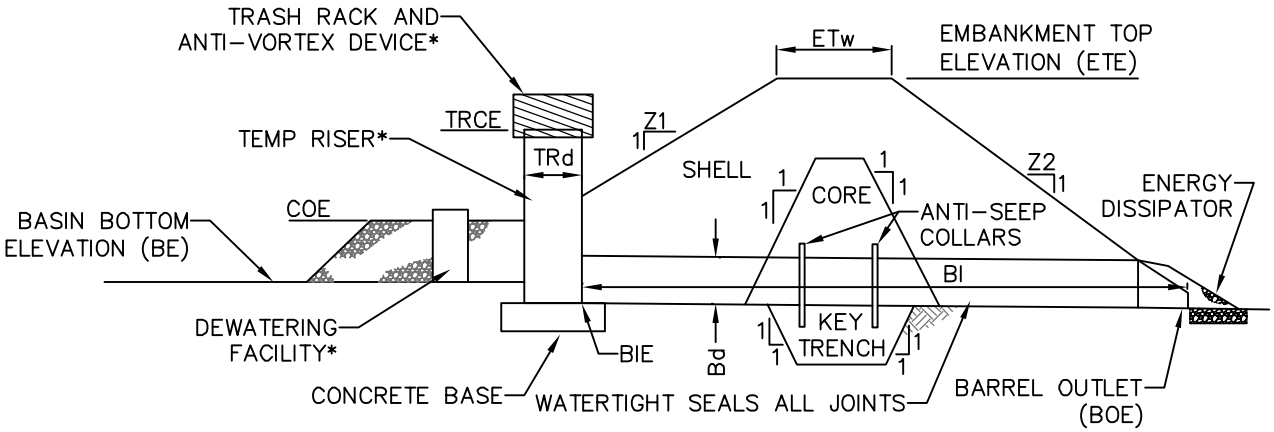

* ALSO REFER TO SEDIMENT BASIN TEMPORARY RISER, EMERGENCY SPILLWAY, ENERGY DISSIPATER, TRASH RACK AND ANTI-VORTEX DEVICE, AND SEDIMENT STORAGE DEWATERING FACILITY DETAILS.

BASIN NO.	Z1 (FT)	Z2 (FT)	TEMPORARY RISER			BARREL				
			DIA TRd (IN)	CREST ELEV TRCE (FT)	MAT'L	DIA Bd (IN)	INLEY ELEV BIE (FT)	MAT'L	LENGTH (FT)	OUTLET ELEV BOE (FT)
88	88	88	888	8888.88	1234567890	888	8888.88	1234567890	888	8888.88

EMBANKMENT				CLEANOUT ELEV COE (FT)	BOTTOM ELEV BE (FT)
TOP ELEV ETE (FT)	TOP WIDTH ETw (FT)	KEY TRENCH DEPTH (FT)	KEY TRENCH WIDTH (FT)		
8888.88	88	88	88	8888.88	8888.88

NOTES:

SEDIMENT BASINS, INCLUDING ALL APPURTENANT WORKS, SHALL BE CONSTRUCTED TO THE DETAIL AND DIMENSIONS SHOWN ON THE E&S PLAN DRAWINGS.

AREA UNDER EMBANKMENT SHALL BE CLEARED, GRUBBED, AND STRIPPED OF TOPSOIL TO A DEPTH OF TWO FEET PRIOR TO ANY PLACEMENT AND COMPACTION OF EARTHEN FILL. FILL MATERIAL FOR THE EMBANKMENTS SHALL BE FREE OF ROOTS, OR OTHER WOODY VEGETATION, ORGANIC MATERIAL, LARGE STONES, AND OTHER OBJECTIONABLE MATERIALS. THE EMBANKMENT SHALL BE COMPACTED IN LAYERED LIFTS OF NOT MORE THAN 6 TO 9 IN. THE MAXIMUM ROCK SIZE SHALL BE NO GREATER THAN 2/3 THE LIFT THICKNESS. UPON COMPLETION, THE EMBANKMENT SHALL BE SEEDED AND MULCHED OR OTHERWISE STABILIZED ACCORDING TO THE SPECIFICATIONS OF THE E&S PLAN DRAWINGS. TREES SHALL NOT BE PLANTED ON THE EMBANKMENT.

ACCESS SHALL BE PROVIDED FOR SEDIMENT REMOVAL AND OTHER REQUIRED MAINTENANCE ACTIVITIES.

A CLEAN OUT STAKE SHALL BE PLACED NEAR THE CENTER OF EACH BASIN. ACCUMULATED SEDIMENT SHALL BE REMOVED WHEN IT HAS REACHED THE CLEAN OUT ELEVATION ON THE STAKE AND RESTORE THE BASIN TO ITS ORIGINAL DIMENSIONS. DISPOSE OF MATERIALS REMOVED FROM THE BASIN IN THE MANNER DESCRIBED IN THE E&S PLAN.

INSPECT ALL SEDIMENT BASINS ON AT LEAST A WEEKLY BASIS AND AFTER EACH RUNOFF EVENT. CHECK BASIN EMBANKMENTS, SPILLWAYS, AND OUTLETS FOR EROSION, PIPING AND SETTLEMENT. NECESSARY REPAIRS SHALL BE MADE IMMEDIATELY. DISPLACED RIPRAP WITHIN THE OUTLET ENERGY DISSIPATER SHALL BE REPLACED IMMEDIATELY. ACCUMULATED SEDIMENT SHALL BE REMOVED AND DISTURBED AREAS SHALL BE STABILIZED INSIDE THE BASIN BEFORE CONVERSION TO A STORMWATER MANAGEMENT FACILITY. THE DEVICE SHOWN IN STANDARD CONSTRUCTION DETAIL #7-16 MAY BE USED TO DEWATER SATURATED SEDIMENT PRIOR TO ITS REMOVAL. ROCK FILTERS SHALL BE ADDED AS NECESSARY.

STANDARD CONSTRUCTION DETAIL #7-6
SEDIMENT BASIN EMBANKMENT AND SPILLWAY DETAILS
PERFORATED RISER

NOT TO SCALE

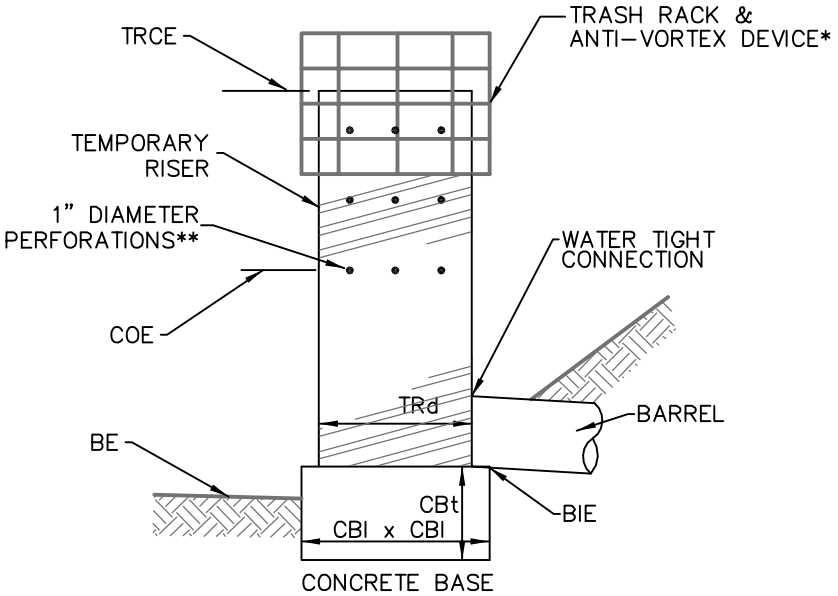

* SEE STANDARD CONSTRUCTION DETAIL #7-5, TRASH RACK AND ANTI-VORTEX DEVICE
** LOWEST ROW OF HOLES AT SEDIMENT CLEAN-OUT ELEVATION

BASIN NO.	TEMPORARY RISER			PERFORATIONS				CONCRETE BASE		BARREL
	DIA TRd (IN)	CREST ELEV TRCE (FT)	MAT'L	LOWEST ROW OF HOLES ELEV (FT)	NO. ROWS**	NO. HOLES PER ROW	VERT. SPACING OF ROWS (FT)	LENGTH AND WIDTH CBI (IN)	THICKNESS CBt (IN)	INLET ELEV BIE (FT)
88	88	8888.88	1234567890	8888.88	88	88	8.88	88	88	8888.88

NOTES:

A MINIMUM OF 2-#8 REBAR SHALL BE PLACED AT RIGHT ANGLES AND PROJECTING THROUGH SIDES OF RISER TO ANCHOR IT TO CONCRETE BASE. REBAR SHALL PROJECT A MINIMUM OF 1/4 RISER DIAMETER BEYOND OUTSIDE OF RISER.

CONCRETE BASE SHALL BE POURED IN SUCH A MANNER SO AS TO INSURE THAT CONCRETE FILLS BOTTOM OF RISER TO INVERT OF THE OUTLET PIPE TO PREVENT RISER FROM BREAKING AWAY FROM THE BASE. MINIMUM BASE WIDTH EQUALS 2 TIMES RISER DIAMETER.

EMBEDDED SECTION OF ALUMINUM OR ALUMINIZED PIPE SHALL BE PAINTED WITH ZINC CHROMATE OR EQUIVALENT.

CLOGGED OR DAMAGED SPILLWAYS SHALL BE REPAIRED IMMEDIATELY. TRASH AND OTHER DEBRIS SHALL BE REMOVED FROM THE BASIN AND RISER.

STANDARD CONSTRUCTION DETAIL #7-7
SEDIMENT BASIN TEMPORARY RISER

NOT TO SCALE

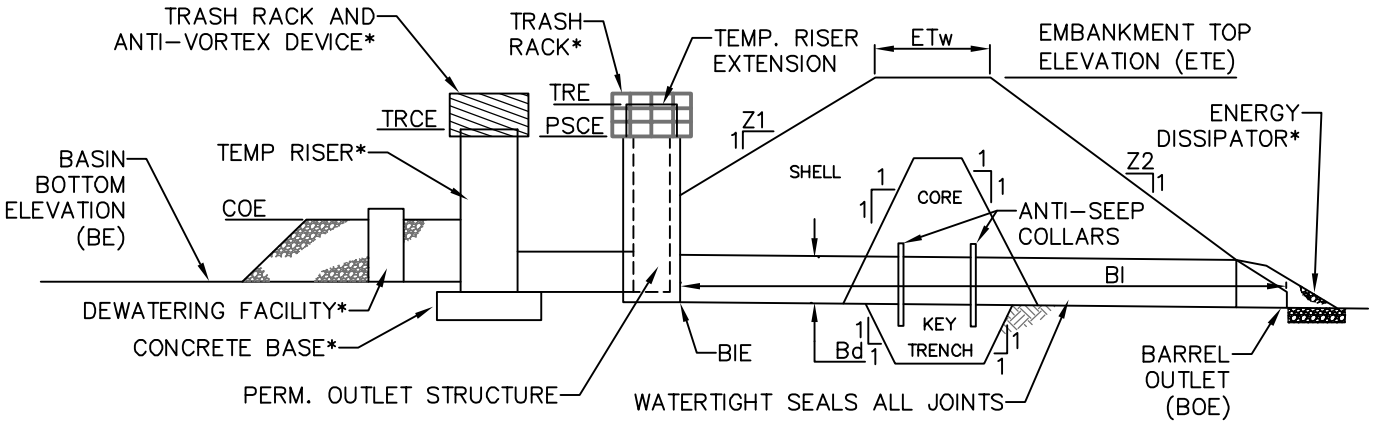

* ALSO REFER TO SEDIMENT BASIN TEMPORARY RISER, EMERGENCY SPILLWAY, ENERGY DISSIPATER, TRASH RACK AND ANTI-VORTEX DEVICE, AND SEDIMENT STORAGE DEWATERING FACILITY DETAILS.

EMBANKMENT SECTION ALONG PRINCIPAL SPILLWAY

BASIN NO.	Z1 (FT)	Z2 (FT)	TEMPORARY RISER				BARREL				
			DIA TRd (IN)	CREST ELEV TRCE (FT)	MAT'L	TEMP RISER EXT. ELEV TRE (FT)	DIA Bd (IN)	INLEY ELEV BIE (FT)	MAT'L	LENGTH BI (FT)	OUTLET ELEV BOE (FT)
88	88	88	888	8888.88	12345	8888.88	888	8888.88	12345	888	8888.88

EMBANKMENT				CLEANOUT ELEV COE (FT)	BOTTOM ELEV BE (FT)
TOP ELEV ETE (FT)	TOP WIDTH ETw (FT)	KEY TRENCH DEPTH (FT)	KEY TRENCH WIDTH (FT)		
8888.88	88	88	88	8888.88	8888.88

NOTES:

SEDIMENT BASINS, INCLUDING ALL APPURTENANT WORKS, SHALL BE CONSTRUCTED TO THE DETAIL AND DIMENSIONS SHOWN ON THE E&S PLAN DRAWINGS.

AREA UNDER EMBANKMENT SHALL BE CLEARED, GRUBBED, AND STRIPPED OF TOPSOIL TO A DEPTH OF TWO FEET PRIOR TO ANY PLACEMENT AND COMPACTION OF EARTHEN FILL. FILL MATERIAL FOR THE EMBANKMENTS SHALL BE FREE OF ROOTS, OR OTHER WOODY VEGETATION, ORGANIC MATERIAL, LARGE STONES, AND OTHER OBJECTIONABLE MATERIALS. THE EMBANKMENT SHALL BE COMPACTED IN LAYERED LIFTS OF NOT MORE THAN 6 TO 9 IN. THE MAXIMUM ROCK SIZE SHALL BE NO GREATER THAN 2/3 THE LIFT THICKNESS. UPON COMPLETION, THE EMBANKMENT SHALL BE SEEDED AND MULCHED OR OTHERWISE STABILIZED ACCORDING TO THE SPECIFICATIONS OF THE E&S PLAN DRAWINGS. TREES SHALL NOT BE PLANTED ON THE EMBANKMENT.

ALL SEDIMENT BASINS SHALL BE INSPECTED ON AT LEAST A WEEKLY BASIS AND AFTER EACH RUNOFF EVENT.

ACCESS FOR SEDIMENT REMOVAL AND OTHER REQUIRED MAINTENANCE ACTIVITIES SHALL BE PROVIDED.

A CLEAN OUT STAKE SHALL BE PLACED NEAR THE CENTER OF EACH BASIN. ACCUMULATED SEDIMENT SHALL BE REMOVED WHEN IT HAS REACHED THE CLEAN OUT ELEVATION ON THE STAKE AND THE BASIN RESTORED TO ITS ORIGINAL DIMENSIONS. DISPOSE OF MATERIALS REMOVED FROM THE BASIN IN THE MANNER DESCRIBED IN THE E&S PLAN.

BASIN EMBANKMENTS, SPILLWAYS, AND OUTLETS SHALL BE CHECKED FOR EROSION, PIPING AND SETTLEMENT. NECESSARY REPAIRS SHALL BE MADE IMMEDIATELY. DISPLACED RIPRAP WITHIN THE OUTLET ENERGY DISSIPATER SHALL BE REPLACED IMMEDIATELY. ACCUMULATED SEDIMENT SHALL BE REMOVED AND DISTURBED AREAS INSIDE THE BASIN STABILIZED BEFORE CONVERSION TO A STORMWATER MANAGEMENT FACILITY. THE DEVICE SHOWN IN STANDARD CONSTRUCTION DETAIL #7-16 MAY BE USED TO DEWATER SATURATED SEDIMENT PRIOR TO ITS REMOVAL. ROCK FILTERS SHALL BE ADDED AS NECESSARY.

STANDARD CONSTRUCTION DETAIL #7-8

SEDIMENT BASIN DETENTION POND EMBANKMENT AND SPILLWAY DETAILS

NOT TO SCALE

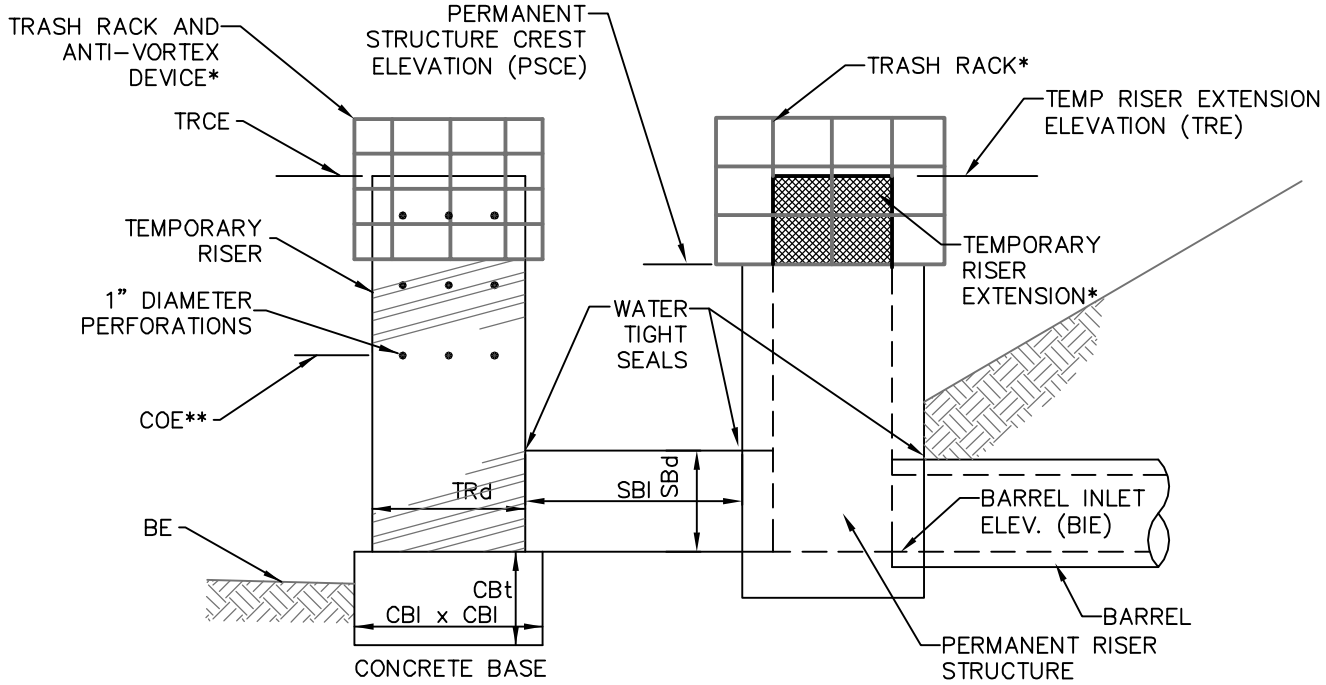

*SEE STANDARD CONSTRUCTION DETAIL #7-5, TRASH RACK AND ANTI-VORTEX DEVICE AND STANDARD CONSTRUCTION DETAIL #7-7, SEDIMENT BASIN TEMPORARY RISER. TOP OF TEMPORARY RISER EXTENSION (TRE) SHALL BE EQUAL TO OR ABOVE TEMPORARY RISER CREST ELEVATION (TRCE) AND 6 IN. MIN. BELOW CREST OF EMERGENCY SPILLWAY. REMOVE FLAT GRATE FROM PERMANENT RISER FOR AS LONG AS BASIN FUNCTIONS AS A SEDIMENT REMOVAL BMP.

** LOWEST ROW OF HOLES AT SEDIMENT CLEAN-OUT ELEVATION

BASIN NO.	TEMPORARY RISER			PERFORATIONS				CONCRETE BASE	
	DIA TRd (IN)	CREST ELEV TRCE (FT)	MAT'L	LOWEST ROW OF HOLES ELEV (FT)	NO. ROWS**	NO. HOLES PER ROW	VERT. SPACING OF ROWS (FT)	LENGTH AND WIDTH CBI (IN)	THICKNESS CBt (IN)
88	88	8888.88	1234567890	8888.88	88	88	8.88	88	88

BASIN NO.	TEMPORARY STUB				PERMANENT STRUCTURE			BARREL INLET ELEV BIE (FT)
	DIA SBd (IN)	INVERT ELEV SBIE (FT)	MAT'L	LENGTH SBI (FT)	CREST ELEV PSCE (FT)	CREST ELEV TRE (FT)	OUTLET ELEV PSOE (FT)	
88	88	8888.88	1234567890	88	8888.88	8888.88	8888.88	8888.88

NOTES:

A MINIMUM OF 2-#8 REBAR SHALL BE PLACED AT RIGHT ANGLES AND PROJECTING THROUGH SIDES OF RISER TO ANCHOR IT TO CONCRETE BASE. REBAR SHALL PROJECT A MINIMUM OF 1/4 RISER DIAMETER BEYOND OUTSIDE OF RISER.

CONCRETE BASE SHALL BE POURED IN SUCH A MANNER SO AS TO INSURE THAT CONCRETE FILLS BOTTOM OF RISER TO INVERT OF THE OUTLET PIPE TO PREVENT RISER FROM BREAKING AWAY FROM THE BASE. MINIMUM BASE WIDTH EQUALS 2 TIMES RISER DIAMETER.

EMBEDDED SECTION OF ALUMINUM OR ALUMINIZED PIPE SHALL BE PAINTED WITH ZINC CHROMATE OR EQUIVALENT.

CLOGGED OR DAMAGED SPILLWAYS SHALL BE REPAIRED IMMEDIATELY. TRASH AND OTHER DEBRIS SHALL BE REMOVED FROM THE BASIN AND RISER.

STANDARD CONSTRUCTION DETAIL #7-9
SEDIMENT BASIN/DETENTION POND RISER STRUCTURES

NOT TO SCALE

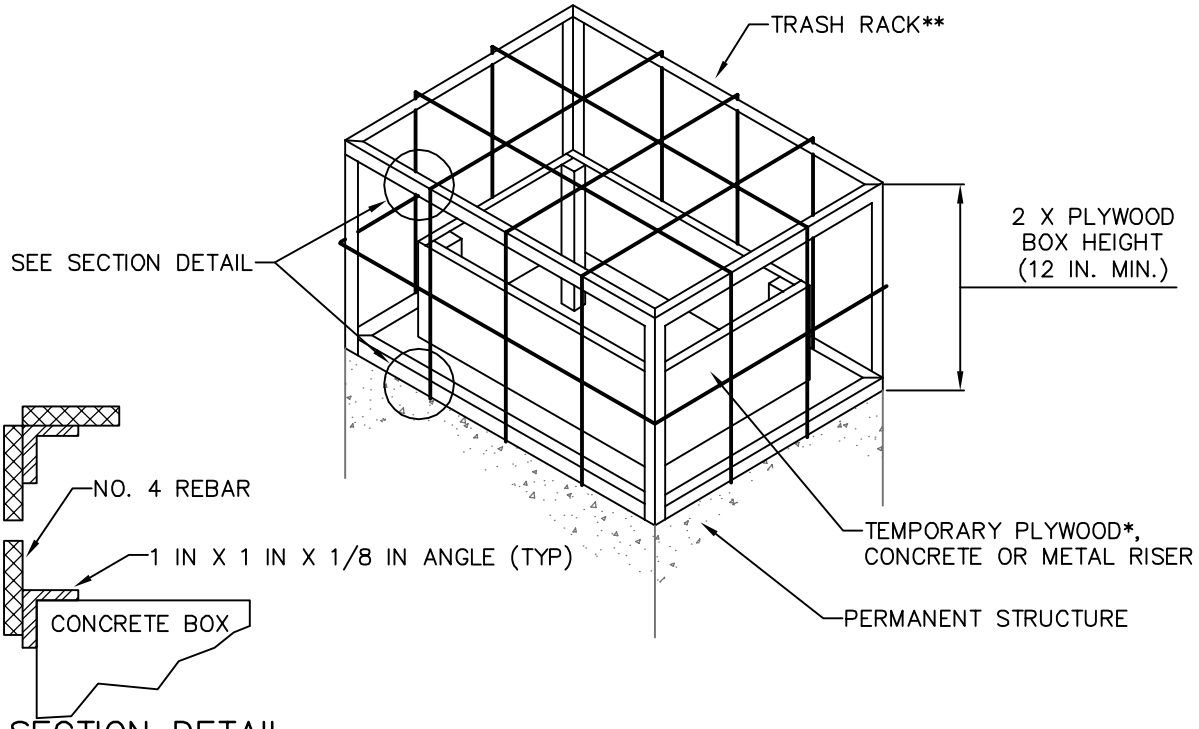

SECTION DETAIL

* 3/4 IN. PRESSURE TREATED PLYWOOD BOX WITH 2 IN. X 2 IN. PRESSURE TREATED CORNER SUPPORTS, SET INTO 1–1/2 IN. GRATE OFFSETS, CAULK ALL SEAMS TO FORM WATERTIGHT SEALS.
** TRASH RACK COMPOSED OF 1 IN. X 1 IN. X 1/8 IN. L (TYP.) AND #4 BARS (TYP.) WELDED TO THE ANGLES AND AT EACH INTERSECTION OF THE BARS; #4 BARS SPACED AT HALF THE DIAMETER OF THE BARREL MAX.

NOTES:

BOX SHALL BE BOLTED, STRAPPED, OR OTHERWISE SECURED TO THE PERMANENT RISER.

TOP OF TEMPORARY RISER EXTENSION SHALL BE AT LEAST AS HIGH AS SEDIMENT BASIN TEMPORARY RISER AND SHALL BE 6 IN. (MINIMUM) BELOW CREST OF EMERGENCY SPILLWAY.

ALL JOINTS SHALL BE WATER TIGHT.

CLOGGED OR DAMAGED SPILLWAYS SHALL BE REPAIRED IMMEDIATELY. TRASH AND OTHER DEBRIS SHALL BE REMOVED FROM THE BASIN AND RISER.

STANDARD CONSTRUCTION DETAIL #7-10
TEMPORARY RISER EXTENSION AND TRASH RACK FOR PERMANENT STRUCTURE

NOT TO SCALE

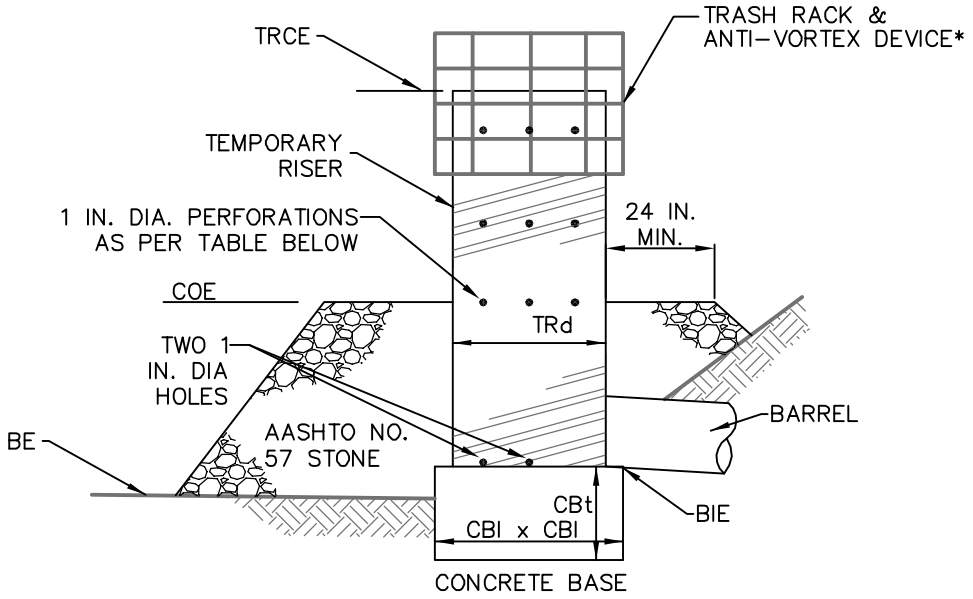

* SEE STANDARD CONSTRUCTION DETAIL #7–5, TRASH RACK AND ANTI–VORTEX DEVICE

BASIN NO.	TEMPORARY RISER			PERFORATIONS			CONCRETE BASE		BARREL
	DIA TRd (IN)	CREST ELEV TRCE (FT)	MAT'L	NO. HOLES PER ROW	VERT. SPACING OF ROWS (FT)	BOTTOM ROW ELEV COE (FT)	LENGTH AND WIDTH CBI (IN)	THICKNESS CBt (IN)	INLET ELEV BIE (FT)
88	88	8888.88	12345	88	88	8888.88	88	88	8888.88

NOTES:

A MINIMUM OF 2–#8 REBAR SHALL BE PLACED AT RIGHT ANGLES AND PROJECTING THROUGH SIDES OF RISER TO ANCHOR IT TO CONCRETE BASE. REBAR SHALL PROJECT A MINIMUM OF 1/4 RISER DIAMETER BEYOND OUTSIDE OF RISER.

CONCRETE BASE SHALL BE POURED IN SUCH A MANNER SO AS TO INSURE THAT CONCRETE FILLS BOTTOM OF RISER TO INVERT OF THE OUTLET PIPE TO PREVENT RISER FROM BREAKING AWAY FROM THE BASE. MINIMUM BASE WIDTH EQUALS 2 TIMES RISER DIAMETER.

EMBEDDED SECTION OF ALUMINUM OR ALUMINIZED PIPE SHALL BE PAINTED WITH ZINC CHROMATE OR EQUIVALENT.

CLOGGED OR DAMAGED SPILLWAYS SHALL BE REPAIRED IMMEDIATELY. TRASH AND OTHER DEBRIS SHALL BE REMOVED FROM THE BASIN AND RISER.

STANDARD CONSTRUCTION DETAIL #7-11
DRY SEDIMENT BASIN TEMPORARY RISER

NOT TO SCALE

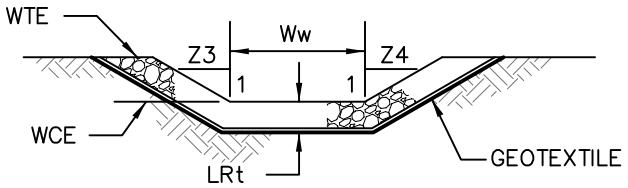

WEIR
SECTION Z–Z

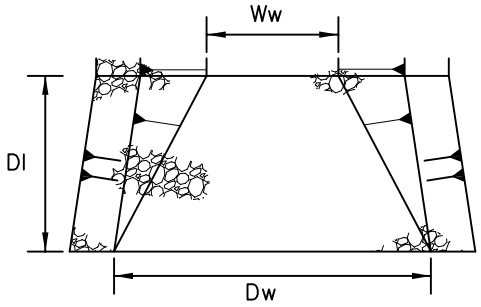

RIPRAP OUTLET DISSIPATOR
PLAN VIEW

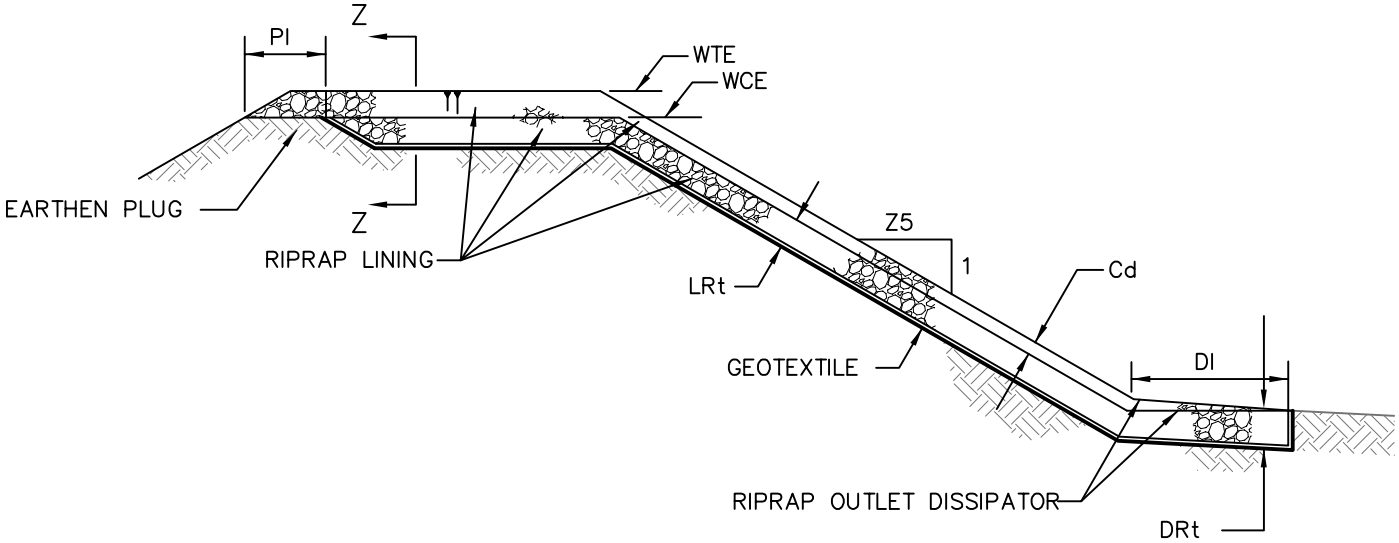

EMBANKMENT SECTION ALONG EMERGENCY SPILLWAY

BASIN NO.	WEIR					LINING		CHANNEL		DISSIPATOR			
	Z3 (FT)	Z4 (FT)	TOP ELEV WTE (FT)	CREST ELEV WCE (FT)	WIDTH Ww (FT)	RIPRAP SIZE (R–_)	RIPRAP THICK. LRt (IN)	Z5 (FT)	DEPTH Cd (FT)	LENGTH Dl (FT)	WIDTH Dw (FT)	RIPRAP SIZE (R–_)	RIPRAP THICK. DRt (IN)
88	88	88	8888.88	8888.88	88	88	88	88	88	88	88	88	88

NOTES:

DIMENSION Pl SHALL BE 5' MINIMUM.
DISPLACED RIPRAP WITHIN THE SPILLWAY AND/OR OUTLET CHANNEL SHALL BE REPLACED IMMEDIATELY.

STANDARD CONSTRUCTION DETAIL #7-12
SEDIMENT BASIN EMERGENCY SPILLWAY WITH RIPRAP LINING

NOT TO SCALE

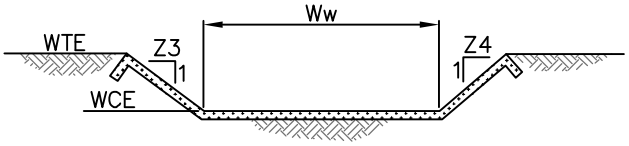

WEIR
SECTION Z–Z

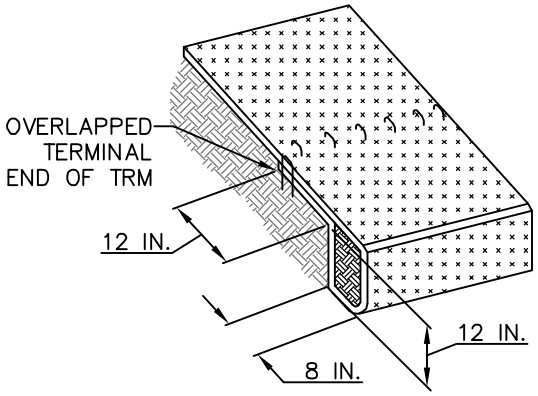

KEY TRENCH AT TOE
OF SLOPE OF SPILLWAY

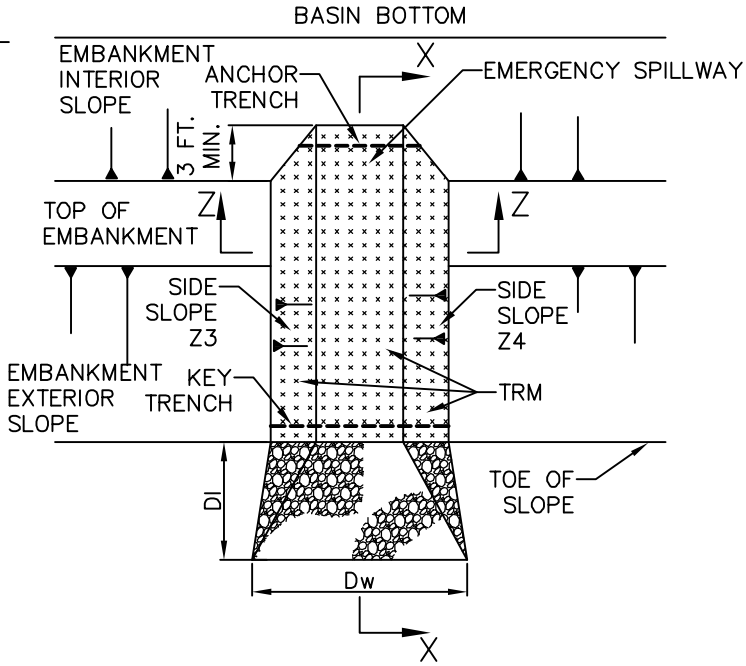

PLAN VIEW
RIPRAP OUTLET DISSIPATOR

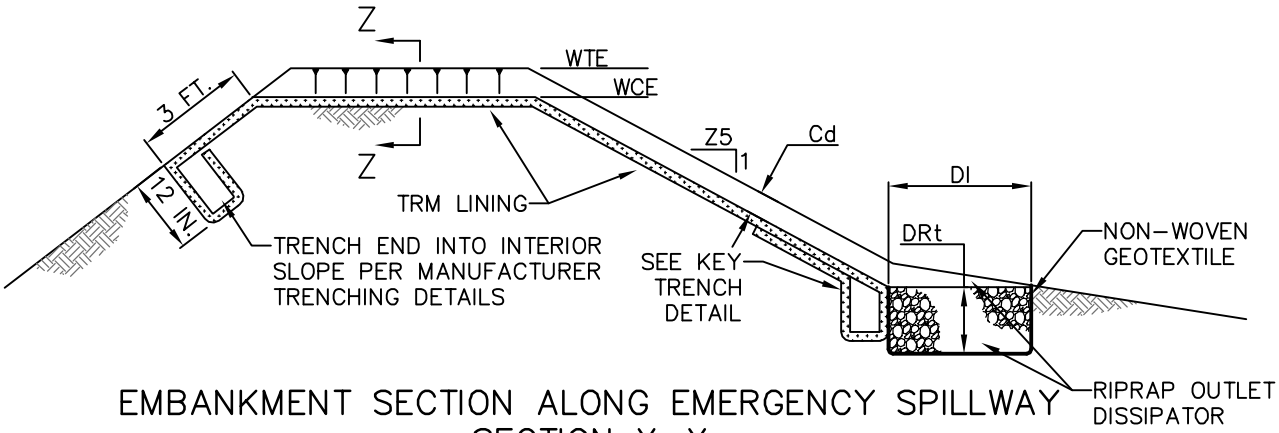

EMBANKMENT SECTION ALONG EMERGENCY SPILLWAY
SECTION X–X

BASIN NO.	WEIR					LINING		CHANNEL		DISSIPATOR			
	Z3 (FT)	Z4 (FT)	TOP ELEV WTE (FT)	CREST ELEV WCE (FT)	WIDTH Ww (FT)	TRM TYPE	STAPLE PATTERN	Z5 (FT)	DEPTH Cd (FT)	LENGTH Dl (FT)	WIDTH Dw (FT)	RIPRAP SIZE (R–_)	RIPRAP THICK. DRt (IN)
88	88	88	8888.88	8888.88	88	12345678	12345	88	88	88	88	88	88

NOTES:

HEAVY EQUIPMENT SHALL NOT CROSS OVER SPILLWAY WITHOUT PRECAUTIONS TAKEN TO PROTECT TRM LINING.

DISPLACED LINER WITHIN THE SPILLWAY AND/OR OUTLET CHANNEL SHALL BE REPLACED IMMEDIATELY.

RIPRAP AT TOE OF EMBANKMENT SHALL BE EXTENDED A SUFFICIENT LENGTH IN BOTH DIRECTIONS TO PREVENT SCOUR.

THE USE OF BAFFLES THAT REQUIRE SUPPORT POSTS ARE RESTRICTED FROM USE IN BASINS REQUIRING IMPERVIOUS LINERS.

STANDARD CONSTRUCTION DETAIL #7-13
SEDIMENT BASIN EMERGENCY SPILLWAY WITH TRM LINING

NOT TO SCALE

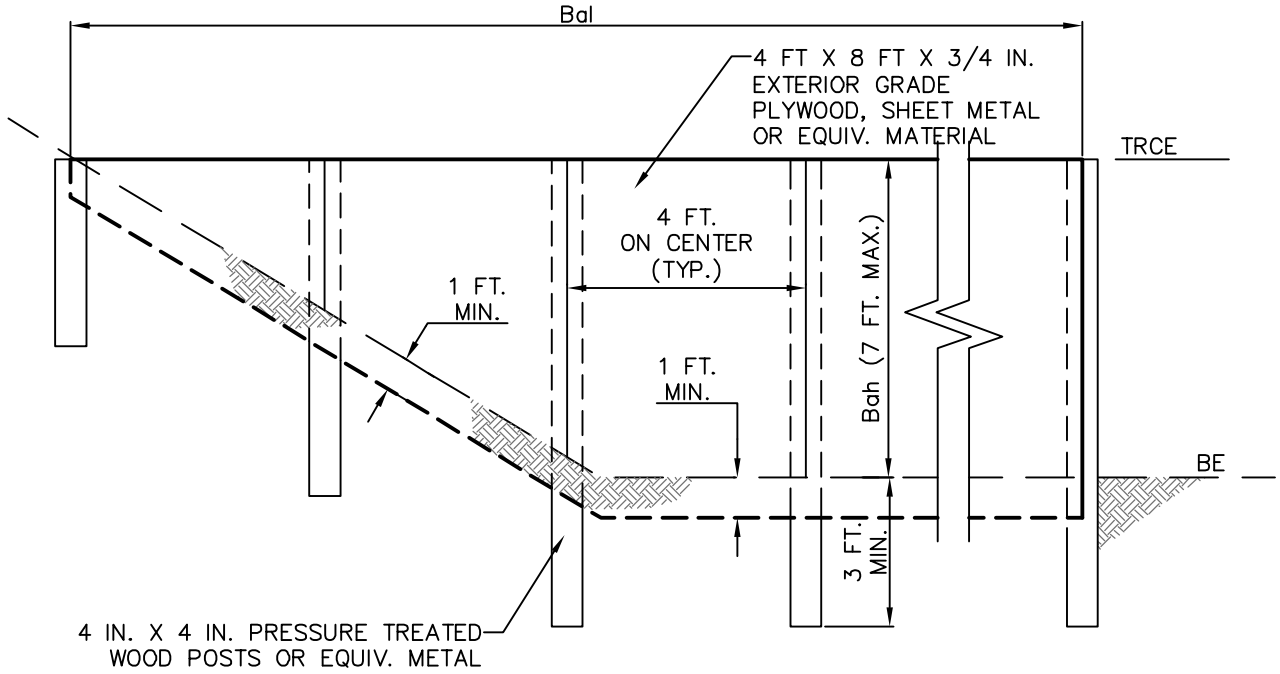

BASIN OR TRAP NO.	BAFFLE		TEMPORARY RISER	BOTTOM
	LENGTH Bal (FT)	HEIGHT Bah (FT)	CREST ELEV. TRCE (FT)	BOTTOM ELEV BE (FT)
88	88	88	8888.88	8888.88

NOTES:

SEE APPROPRIATE BASIN DETAIL FOR PROPER LOCATION AND ORIENTATION.

AN ACCEPTABLE ALTERNATIVE IS TO INSTALL A SUPER SILT FENCE AT THE BAFFLE LOCATION

IN POOLS WITH DEPTHS EXCEEDING 7', THE TOP OF THE PLYWOOD BAFFLE DOES NOT NEED TO EXTEND TO THE TEMPORARY RISER CREST. SUPER SILT FENCE BAFFLES NEED NOT EXTEND TO TRCE ELEVATION.

BAFFLES SHALL BE TIED INTO ONE SIDE OF THE BASIN UNLESS OTHERWISE SHOWN ON THE PLAN DRAWINGS.

SUBSTITUTION OF MATERIALS NOT SPECIFIED IN THIS DETAIL SHALL BE APPROVED BY THE DEPARTMENT OR THE LOCAL CONSERVATION DISTRICT BEFORE INSTALLATION.

DAMAGED OR WARPED BAFFLES SHALL BE REPLACED WITHIN 7 DAYS OF INSPECTION.

BAFFLES REQUIRING SUPPORT POSTS SHALL NOT BE INSTALLED IN BASINS REQUIRING IMPERVIOUS LINERS.

STANDARD CONSTRUCTION DETAIL #7-14

BAFFLE

NOT TO SCALE

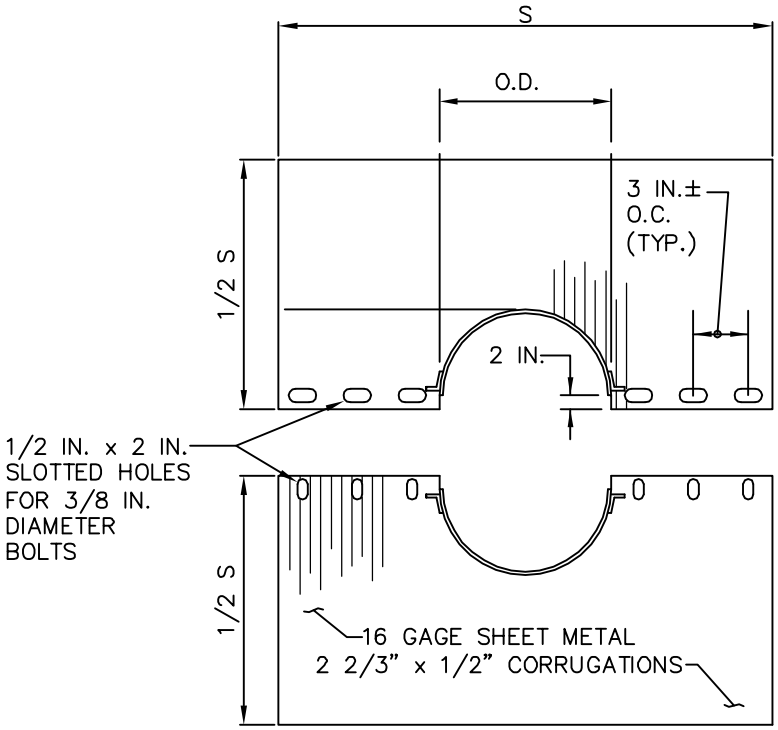

ELEVATION

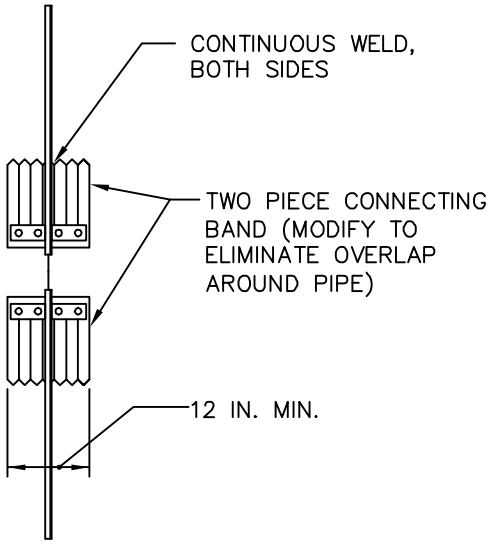

END VIEW

BASIN OR TRAP NO.	PIPE SIZE (IN)	S (IN)	NO. OF COLLARS	RISER TO FIRST COLLAR (FT)	COLLAR SPACING (FT)
88	88	88	88	88	88

NOTES:

COLLAR SHALL BE OF SAME GAGE AND WITH SAME COATING AS PIPE WITH WHICH IT IS USED.

INSTALL WITH CORRUGATIONS VERTICAL.

MINIMUM DISTANCE TO PIPE JOINT SHALL BE 2 FEET.

ALL COLLARS SHALL BE INSTALLED SO AS TO BE WATERTIGHT. THE LAP BETWEEN THE TWO HALF SECTIONS AND BETWEEN THE PIPE AND CONNECTING BAND SHALL BE CAULKED WITH ASPHALT MASTIC AT TIME OF INSTALLATION.

COLLAR SIZE AND SPACING SHALL BE AS INDICATED WITHIN TABLE.

STANDARD CONSTRUCTION DETAIL #7-15

METAL ANTI-SEEP COLLAR FOR TEMPORARY BASINS OR TRAPS

NOT TO SCALE

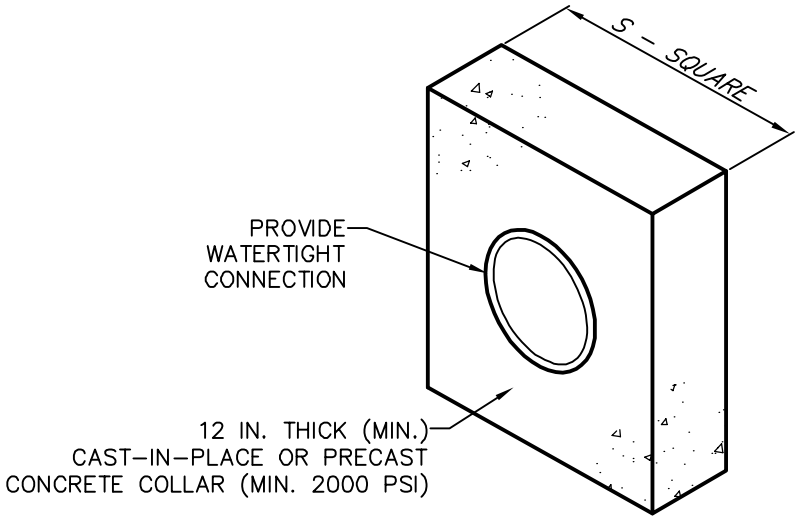

BASIN OR TRAP NO.	PIPE SIZE (IN)	S (IN)	NO. OF COLLARS	RISER TO FIRST COLLAR (FT)	COLLAR SPACING (FT)
88	88	88	88	88	88

NOTES:

ALL COLLARS SHALL BE INSTALLED SO AS TO BE WATERTIGHT.

COLLAR SIZE AND SPACING SHALL BE AS INDICATED WITHIN TABLE.

STANDARD CONSTRUCTION DETAIL #7-16

CONCRETE ANTI-SEEP COLLAR FOR PERMANENT BASINS OR TRAPS

NOT TO SCALE

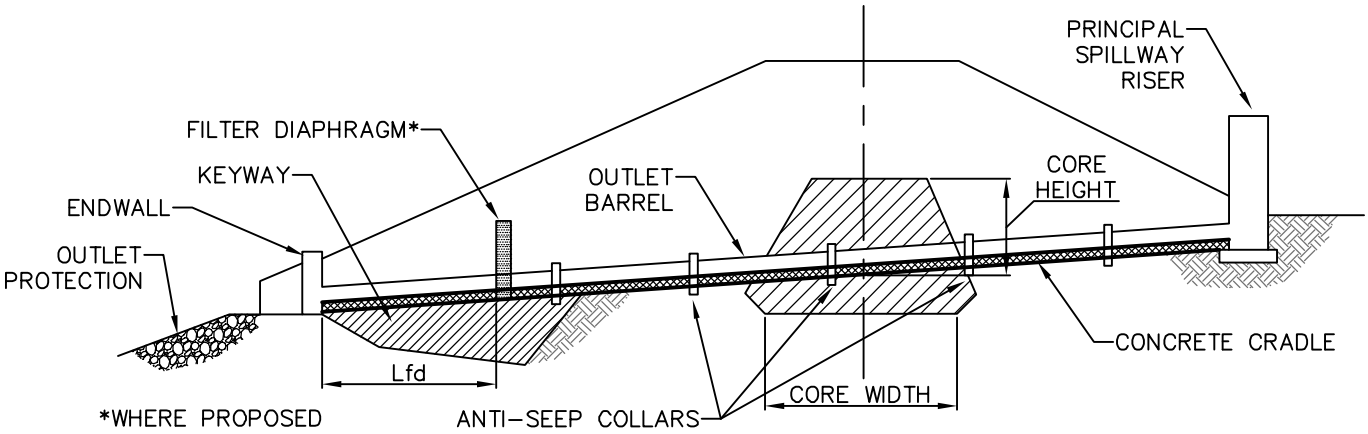

EMBANKMENT ALONG PRINCIPAL SPILLWAY

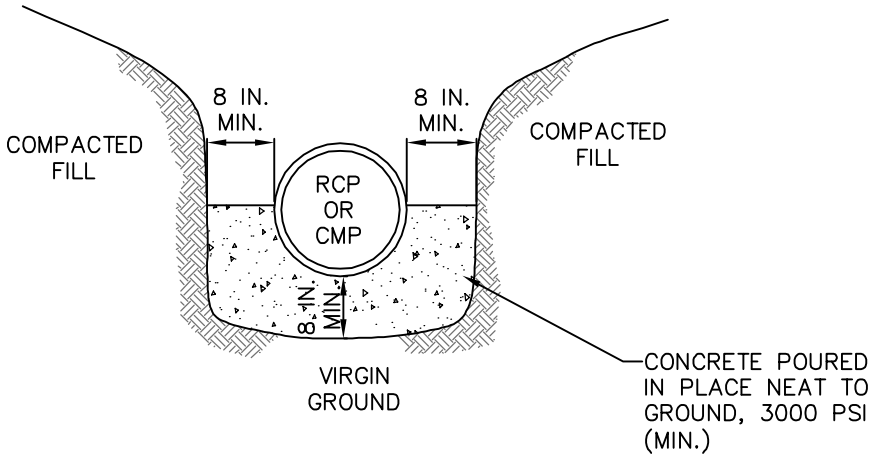

CROSS-SECTION AT OUTLET BARREL

NOTES:

A CONCRETE CRADLE MAY BE USED IN CONJUNCTION WITH ANTI-SEEP COLLARS AND/OR FILTER DIAPHRAGM.
ANTI-SEEP COLLAR NUMBER, SIZE AND SPACING SHALL BE AS SHOWN ELSEWHERE IN PLAN.
FILTER DIAPHRAGM LOCATION (Lfd) SHALL BE AS SHOWN IN FIGURE 7.8 OF THE PA DEP EROSION CONTROL MANUAL.

STANDARD CONSTRUCTION DETAIL #7-17
CONCRETE CRADLE FOR BASIN OR TRAP OUTLET BARREL

NOT TO SCALE

30 TO 55 GALLON BARREL WITH 1 IN DIA. PERFORATIONS AT 6 IN. HORIZONTAL AND 6 IN. VERTICAL SPACING

PLACE 2 IN. x 2 IN. VERTICAL WOOD SLATS @ 6 IN. HORIZONTAL SPACING AROUND THE BARREL

WRAP FILTER FABRIC AROUND THE BARREL AND SLATS

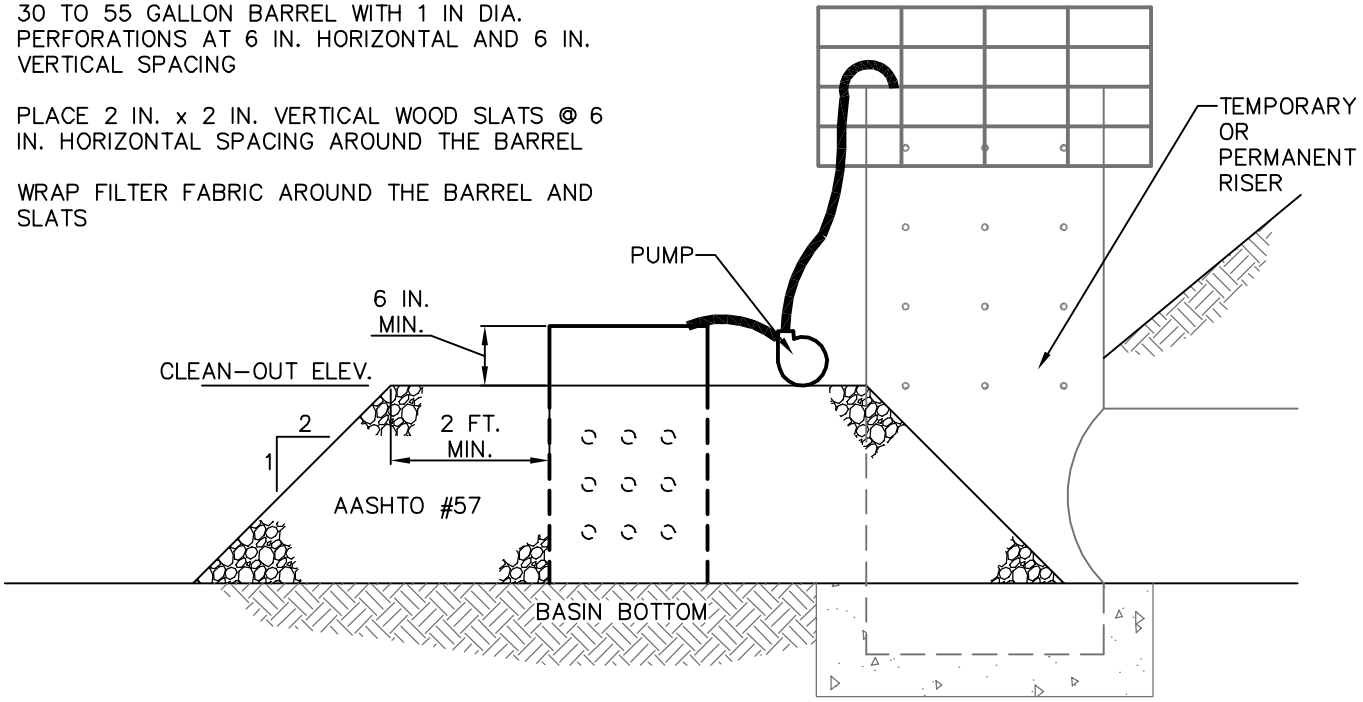

NOTES:

DEWATERING FACILITY SHALL BE INSTALLED IMMEDIATELY UPON COMPLETION OF BASIN/TRAP.

PRIOR TO INITIATING OPERATION OF DEWATERING FACILITY, ALL ACCUMULATED SEDIMENT SHALL BE CLEANED FROM THE INSIDE OF THE BARREL.

DEWATERING FACILITY SHALL BE CONTINUOUSLY MONITORED DURING OPERATION. IF FOR ANY REASON THE DEWATERING FACILITY CEASES TO FUNCTION PROPERLY, IT SHALL BE IMMEDIATELY SHUT DOWN AND NOT RESTARTED UNTIL THE PROBLEM HAS BEEN CORRECTED.

STANDARD CONSTRUCTION DETAIL #7-18

SEDIMENT BASIN OR SEDIMENT TRAP
SEDIMENT STORAGE DEWATERING FACILITY

NOT TO SCALE

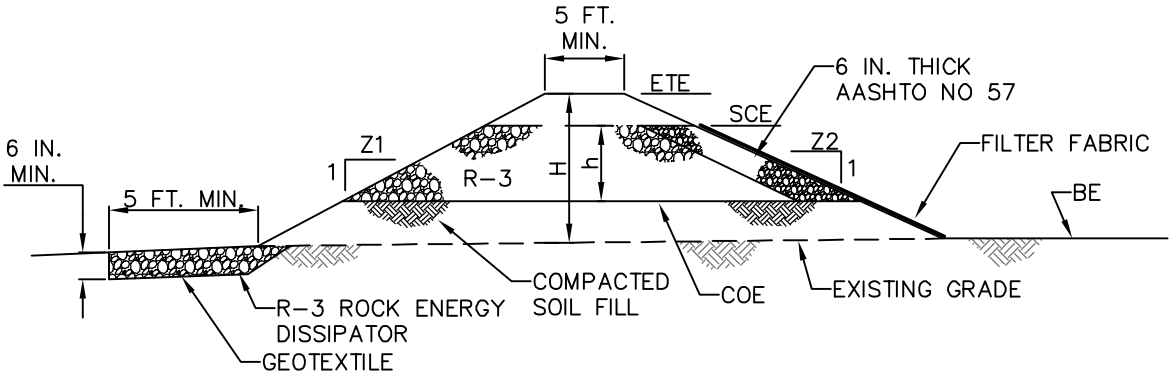

SECTION THROUGH SPILLWAY

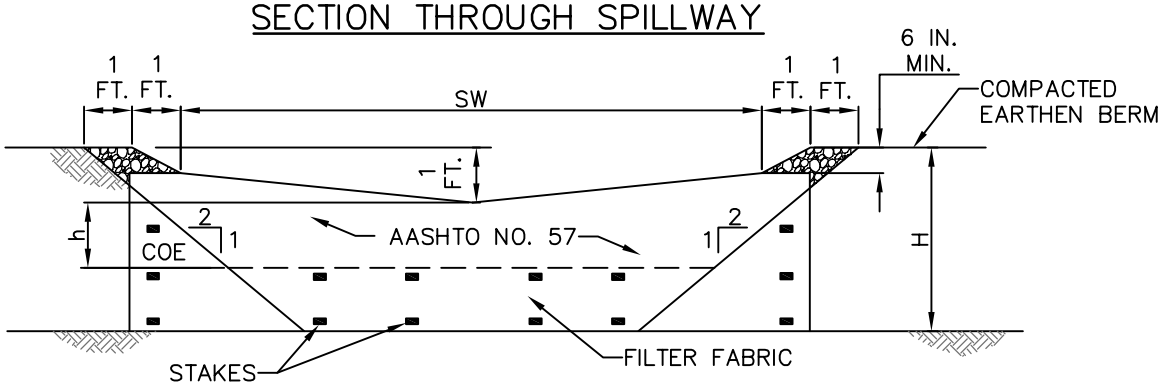

INSIDE FACE

TRAP NO.	Z1 (FT)	Z2 (FT)	H (FT)	h (FT)	EMBANK. TOP ELEV. ETE (FT)	SPILLWAY CREST ELEV. SCE (FT)	CLEAN OUT ELEV. COE (FT)	BOTTOM ELEV. BE (FT)	SPILLWAY WIDTH SW (FT)
88	88	88	88	88	8888.88	8888.88	8888.88	8888.88	88

NOTES:

EMBANKMENT OUTLET SHALL BE COMPOSED ENTIRELY OF ROCK ABOVE CLEAN OUT ELEVATION (COE); MAIN BODY R-3 OR LARGER -- R-4 TO BE USED FOR DRAINAGE AREAS GREATER THAN 3.0 ACRES, INSIDE FACE AASHTO # 57 STONE OR SMALLER. A 6 IN. THICK LAYER OF COMPOST, COMPOST SOCK, OR CLEAN SAND SHALL BE INSTALLED ON TOP OF THE AASHTO #57 STONE AND SECURELY ANCHORED IN HQ WATERSHEDS. 24 IN. DIAMETER COMPOST SOCK(S) SHALL BE USED IN PLACE OF FILTER FABRIC AND AASHTO #57 STONE IN EV WATERSHEDS.

FILL MATERIAL FOR THE EMBANKMENTS SHALL BE FREE OF ROOTS, OR OTHER WOODY VEGETATION, ORGANIC MATERIAL, LARGE STONES, AND OTHER OBJECTIONABLE MATERIALS. THE EMBANKMENT SHALL BE COMPACTED IN LAYERED LIFTS OF NOT MORE THAN 9 IN.. THE MAXIMUM ROCK SIZE SHALL BE NO GREATER THAN 6 IN.
UPON COMPLETION, THE EMBANKMENT SHALL BE SEEDED AND MULCHED OR OTHERWISE STABILIZED ACCORDING TO THE SPECIFICATIONS OF THE E&S PLAN DRAWINGS.

ALL SEDIMENT TRAPS SHALL BE INSPECTED AT LEAST WEEKLY AND AFTER EACH RUNOFF EVENT.

ACCESS FOR SEDIMENT REMOVAL AND OTHER REQUIRED MAINTENANCE ACTIVITIES SHALL BE PROVIDED.

A CLEAN OUT STAKE SHALL BE PLACED NEAR THE CENTER OF EACH TRAP. ACCUMULATED SEDIMENT SHALL BE REMOVED WHEN IT HAS REACHED THE CLEAN OUT ELEVATION ON THE STAKE AND THE TRAP RESTORED TO ITS ORIGINAL DIMENSIONS. DISPOSE OF MATERIALS REMOVED FROM THE TRAP IN THE MANNER DESCRIBED IN THE E&S PLAN.

CHECK EMBANKMENTS, SPILLWAYS, AND OUTLETS FOR EROSION, PIPING AND SETTLEMENT. CLOGGED OR DAMAGED SPILLWAYS AND/OR EMBANKMENTS SHALL BE IMMEDIATELY RESTORED TO THE DESIGN SPECIFICATIONS.

DISPLACED RIPRAP WITHIN THE SPILLWAY OR OUTLET PROTECTION SHALL BE REPLACED IMMEDIATELY.

ACCUMULATED SEDIMENT SHALL BE REMOVED AND DISTURBED AREAS INSIDE THE TRAP SHALL BE STABILIZED BEFORE CONVERSION TO A STORMWATER MANAGEMENT FACILITY. TO ASSIST IN REMOVING SEDIMENT, WHICH MAY BE SATURATED, A DEVICE SUCH AS IS SHOWN IN STANDARD CONSTRUCTION DETAIL #7-18 MAY BE USED TO DEWATER THE SEDIMENT PRIOR TO ITS REMOVAL.

STANDARD CONSTRUCTION DETAIL #8-1

EMBANKMENT SEDIMENT TRAP

NOT TO SCALE

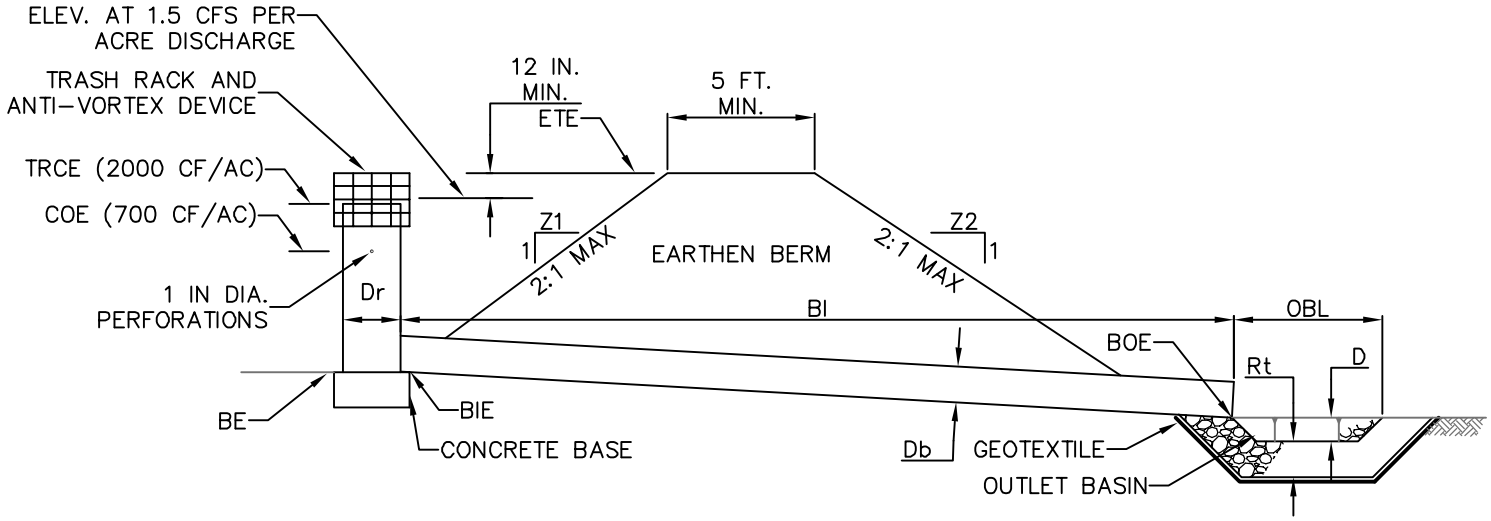

TRAP NO.	Z1 (FT)	Z2 (FT)	RISER				BARREL					EMBANKMENT		CLEAN OUT ELEV COE (FT)	BOTTOM ELEV BE (FT)
			MAT'L	DIA Dr (IN)	CREST ELEV RCE (FT)	BOT PERF ELEV (FT)	MAT'L	DIA Bd (IN)	INLET ELEV BIE (FT)	LENGTH Bl (FT)	OUTLET ELEV BOE (FT)	TOP ELEV ETE (FT)	TOP WIDTH Etw (FT)		
88	88	88	12345	88	8888.88	8888.88	12345	88	8888.88	88	8888.88	8888.88	88	8888.88	8888.88

TRAP NO.	CONCRETE BASE			OUTLET BASIN				
	LENGTH CBl (IN)	WIDTH CBw (IN)	THICK. CBt (IN)	RIPRAP SIZE (R-_)	ROCK THICK Rt (IN)	DEPTH D (IN)	WIDTH OBW (FT)	LENGTH OBL (FT)
88	88	88	88	8	88	88	88	88

NOTES:

SEE DETAIL #8-3 TEMPORARY RISER FOR DETAILS OF THE TEMPORARY RISER CONSTRUCTION.

FILL MATERIAL FOR THE EMBANKMENTS SHALL BE FREE OF ROOTS, OR OTHER WOODY VEGETATION, ORGANIC MATERIAL, LARGE STONES, AND OTHER OBJECTIONABLE MATERIALS. THE EMBANKMENT SHALL BE COMPACTED IN LAYERED LIFTS OF NOT MORE THAN 6 TO 9 IN. THE MAXIMUM ROCK SIZE SHALL BE NO GREATER THAN 2/3 THE LIFT THICKNESS.

UPON COMPLETION, THE EMBANKMENT SHALL BE SEEDED AND MULCHED OR OTHERWISE STABILIZED ACCORDING TO THE SPECIFICATIONS OF THE E&S PLAN DRAWINGS.

ALL SEDIMENT TRAPS SHALL BE INSPECTED AT LEAST WEEKLY AND AFTER EACH RUNOFF EVENT.

ACCESS FOR SEDIMENT REMOVAL AND OTHER REQUIRED MAINTENANCE ACTIVITIES SHALL BE PROVIDED.

A CLEAN OUT STAKE SHALL BE PLACED NEAR THE CENTER OF EACH TRAP. ACCUMULATED SEDIMENT SHALL BE REMOVED WHEN IT HAS REACHED THE CLEAN OUT ELEVATION ON THE STAKE AND THE TRAP RESTORED TO ITS ORIGINAL DIMENSIONS. DISPOSE OF MATERIALS REMOVED FROM THE TRAP IN THE MANNER DESCRIBED IN THE E&S PLAN.

CHECK EMBANKMENTS, SPILLWAYS, AND OUTLETS FOR EROSION, PIPING AND SETTLEMENT. CLOGGED OR DAMAGED SPILLWAYS AND/OR EMBANKMENTS SHALL BE IMMEDIATELY RESTORED TO THE DESIGN SPECIFICATIONS.
DISPLACED RIPRAP WITHIN THE OUTLET PROTECTION SHALL BE REPLACED IMMEDIATELY.

ACCUMULATED SEDIMENT SHALL BE REMOVED AND DISTURBED AREAS INSIDE THE TRAP SHALL BE STABILIZED BEFORE CONVERSION TO A STORMWATER MANAGEMENT FACILITY. TO ASSIST IN REMOVING SEDIMENT, WHICH MAY BE SATURATED, A DEVICE SUCH AS IS SHOWN IN STANDARD CONSTRUCTION DETAIL #7-18 MAY BE USED TO DEWATER THE SEDIMENT PRIOR TO ITS REMOVAL.

STANDARD CONSTRUCTION DETAIL #8-2

BARREL/RISER SEDIMENT TRAP

NOT TO SCALE

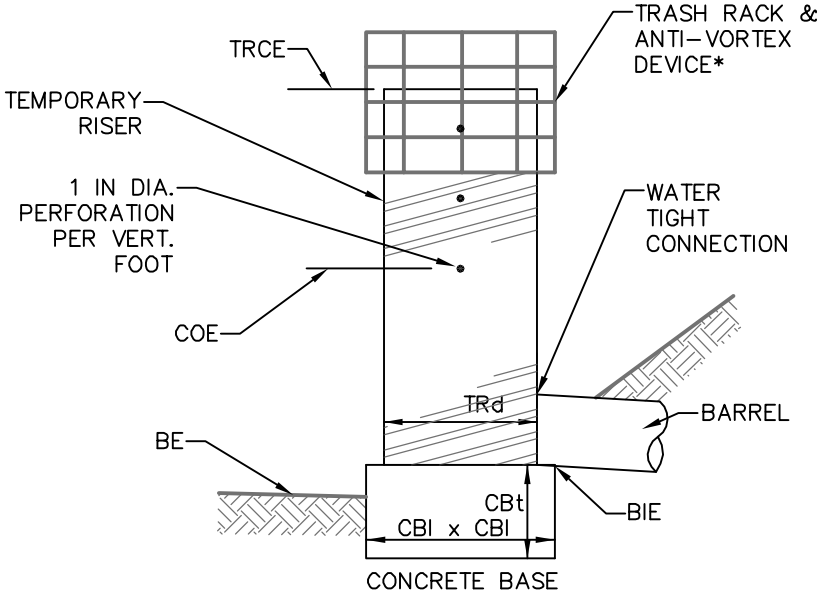

* SEE STANDARD CONSTRUCTION DETAIL #7-5, TRASH RACK AND ANTI-VORTEX DEVICE
** LOWEST HOLE AT SEDIMENT CLEAN-OUT ELEVATION

TRAP NO.	TEMPORARY RISER				CONCRETE BASE			BARREL
	DIA TRd (IN)	CREST ELEV TRCE (FT)	MAT'L	CLEAN OUT ELEV. COE (FT)	LENGTH CBl (IN)	WIDTH CBw (IN)	THICK. CBt (IN)	INLET ELEV BIE (FT)
88	88	8888.88	12345	8888.88	88	88	88	8888.88

NOTES:

A MINIMUM OF 2-#8 REBAR SHALL BE PLACED AT RIGHT ANGLES AND PROJECTING THROUGH SIDES OF RISER TO ANCHOR IT TO CONCRETE BASE. REBAR SHALL PROJECT A MINIMUM OF 1/4 RISER DIAMETER BEYOND OUTSIDE OF RISER.

CONCRETE BASE SHALL BE POURED IN SUCH A MANNER SO AS TO INSURE THAT CONCRETE FILLS BOTTOM OF RISER TO INVERT OF THE OUTLET PIPE TO PREVENT RISER FROM BREAKING AWAY FROM THE BASE. MINIMUM BASE WIDTH EQUALS 2 TIMES RISER DIAMETER.

EMBEDDED SECTION OF ALUMINUM OR ALUMINIZED PIPE SHALL BE PAINTED WITH ZINC CHROMATE OR EQUIVALENT.

CLOGGED OR DAMAGED SPILLWAYS SHALL BE REPAIRED IMMEDIATELY. TRASH AND OTHER DEBRIS SHALL BE REMOVED FROM THE BASIN AND RISER.

STANDARD CONSTRUCTION DETAIL #8-3
SEDIMENT TRAP TEMPORARY RISER

NOT TO SCALE

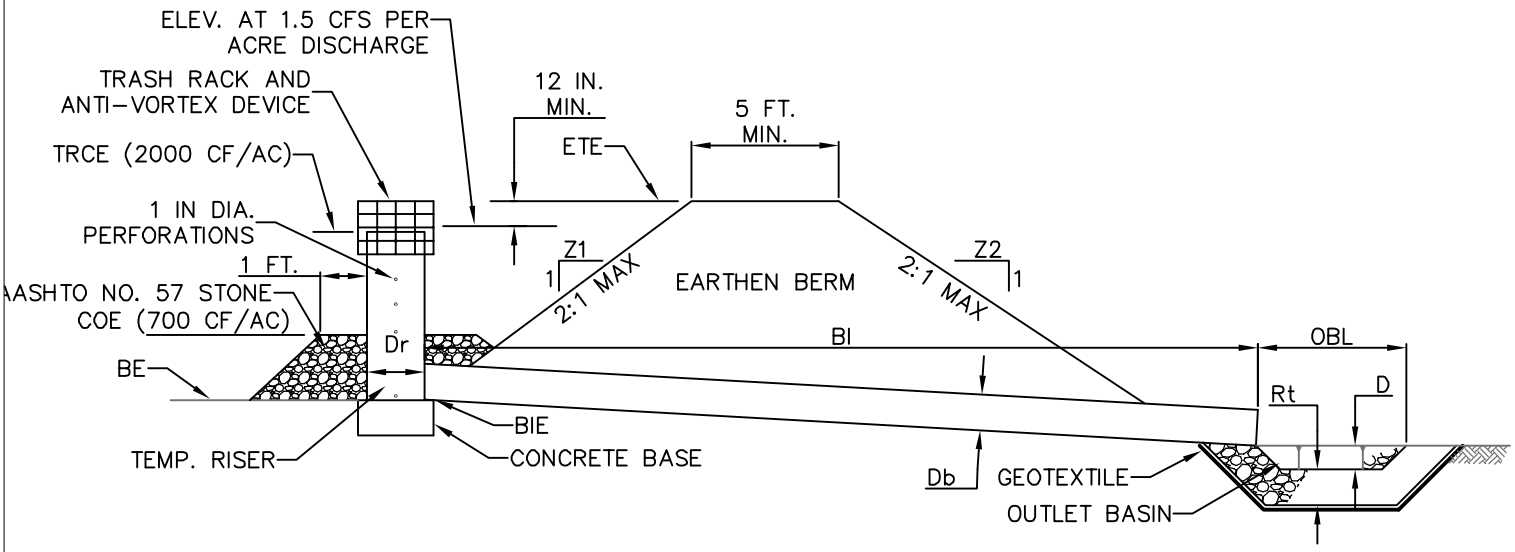

TRAP NO.	Z1 (FT)	Z2 (FT)	RISER				BARREL					EMBANKMENT		CLEAN OUT ELEV COE (FT)	BOTTOM ELEV BE (FT)
			MAT'L	DIA Dr (IN)	CREST ELEV RCE (FT)	BOT PERF ELEV (FT)	MAT'L	DIA Bd (IN)	INLET ELEV BIE (FT)	LENGTH BI (FT)	OUTLET ELEV BOE (FT)	TOP ELEV ETE (FT)	TOP WIDTH Etw (FT)		
88	88	88	12345	88	8888.88	8888.88	12345	88	8888.88	88	8888.88	8888.88	88	8888.88	8888.88

TRAP NO.	CONCRETE BASE			OUTLET BASIN				
	LENGTH CBl (IN)	WIDTH CBw (IN)	THICK. CBt (IN)	RIPRAP SIZE (R-_)	ROCK THICK Rt (IN)	DEPTH D (IN)	WIDTH OBW (FT)	LENGTH OBL (FT)
88	88	88	88	8	88	88	88	88

NOTES:

SEE DETAIL #8-5 DRY SEDIMENT TRAP TEMPORARY RISER FOR DETAILS OF THE TEMPORARY RISER CONSTRUCTION.

IN SPECIAL PROTECTION – HQ OR EV – WATERSHEDS, ADD 6 IN. LAYER OF COMPOST ON TOP OF STONE OR REPLACE STONE WITH SUITABLE COMPOST FILTER SOCK.

FILL MATERIAL FOR THE EMBANKMENTS SHALL BE FREE OF ROOTS, OR OTHER WOODY VEGETATION, ORGANIC MATERIAL, LARGE STONES, AND OTHER OBJECTIONABLE MATERIALS. THE EMBANKMENT SHALL BE COMPACTED IN LAYERED LIFTS OF NOT MORE THAN 6 TO 9 IN. THE MAXIMUM ROCK SIZE SHALL BE NO GREATER THAN 2/3 THE LIFT THICKNESS.

UPON COMPLETION, THE EMBANKMENT SHALL BE SEEDED AND MULCHED OR OTHERWISE STABILIZED ACCORDING TO THE SPECIFICATIONS OF THE E&S PLAN DRAWINGS.

ALL SEDIMENT TRAPS SHALL BE INSPECTED AT LEAST WEEKLY AND AFTER EACH RUNOFF EVENT.

ACCESS FOR SEDIMENT REMOVAL AND OTHER REQUIRED MAINTENANCE ACTIVITIES SHALL BE PROVIDED.

A CLEAN OUT STAKE SHALL BE PLACED NEAR THE CENTER OF EACH TRAP. ACCUMULATED SEDIMENT SHALL BE REMOVED WHEN IT HAS REACHED THE CLEAN OUT ELEVATION ON THE STAKE AND THE TRAP RESTORED TO ITS ORIGINAL DIMENSIONS. DISPOSE OF MATERIALS REMOVED FROM THE TRAP IN THE MANNER DESCRIBED IN THE E&S PLAN.

CHECK EMBANKMENTS, SPILLWAYS, AND OUTLETS FOR EROSION, PIPING AND SETTLEMENT. CLOGGED OR DAMAGED SPILLWAYS AND/OR EMBANKMENTS SHALL BE IMMEDIATELY RESTORED TO THE DESIGN SPECIFICATIONS.

DISPLACED RIPRAP WITHIN THE OUTLET PROTECTION SHALL BE REPLACED IMMEDIATELY.

ACCUMULATED SEDIMENT SHALL BE REMOVED AND DISTURBED AREAS INSIDE THE TRAP SHALL BE STABILIZED BEFORE CONVERSION TO A STORMWATER MANAGEMENT FACILITY. TO ASSIST IN REMOVING SEDIMENT, WHICH MAY BE SATURATED, A DEVICE SUCH AS IS SHOWN IN STANDARD CONSTRUCTION DETAIL #7-18 MAY BE USED TO DEWATER THE SEDIMENT PRIOR TO ITS REMOVAL.

STANDARD CONSTRUCTION DETAIL #8-4
DRY BARREL/RISER SEDIMENT TRAP

NOT TO SCALE

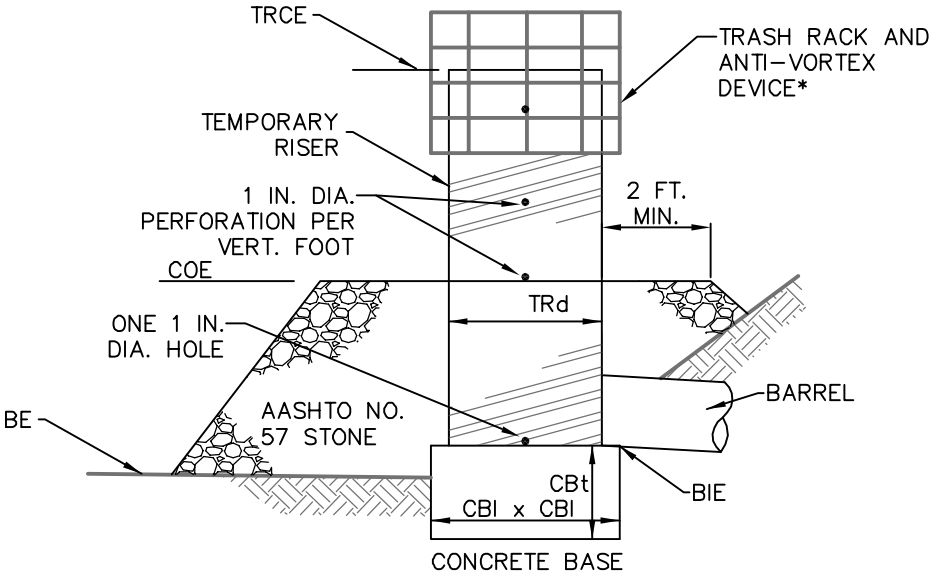

* SEE STANDARD CONSTRUCTION DETAIL #7-5, TRASH RACK AND ANTI-VORTEX DEVICE

TRAP NO.	TEMPORARY RISER				CONCRETE BASE			BARREL
	DIA TRd (IN)	CREST ELEV TRCE (FT)	MAT'L	COE ELEV (FT)	LENGTH CBl (IN)	WIDTH CBw (IN)	THICKNESS CBt (IN)	INLET ELEV BIE (FT)
88	88	8888.88	12345	8888.88	88	88	88	8888.88

NOTES:

IN SPECIAL PROTECTION WATERSHEDS, ANCHOR A 6 IN. LAYER OF COMPOST SHALL BE SECURELY ANCHORED ON TOP OF STONE (HQ) OR REPLACE STONE WITH SUITABLE COMPOST FILTER SOCK (HQ OR EV).

A MINIMUM OF 2-#8 REBAR SHALL BE PLACED AT RIGHT ANGLES AND PROJECTING THROUGH SIDES OF RISER TO ANCHOR IT TO CONCRETE BASE. REBAR SHALL PROJECT A MINIMUM OF 1/4 RISER DIAMETER BEYOND OUTSIDE OF RISER.

CONCRETE BASE SHALL BE POURED IN SUCH A MANNER SO AS TO INSURE THAT CONCRETE FILLS BOTTOM OF RISER TO INVERT OF THE OUTLET PIPE TO PREVENT RISER FROM BREAKING AWAY FROM THE BASE. MINIMUM BASE WIDTH EQUALS 2 TIMES RISER DIAMETER.

EMBEDDED SECTION OF ALUMINUM OR ALUMINIZED PIPE SHALL BE PAINTED WITH ZINC CHROMATE OR EQUIVALENT.

CLOGGED OR DAMAGED SPILLWAYS SHALL BE REPAIRED IMMEDIATELY. TRASH AND OTHER DEBRIS SHALL BE REMOVED FROM THE BASIN AND RISER.

STANDARD CONSTRUCTION DETAIL #8-5
DRY SEDIMENT TRAP TEMPORARY RISER

NOT TO SCALE

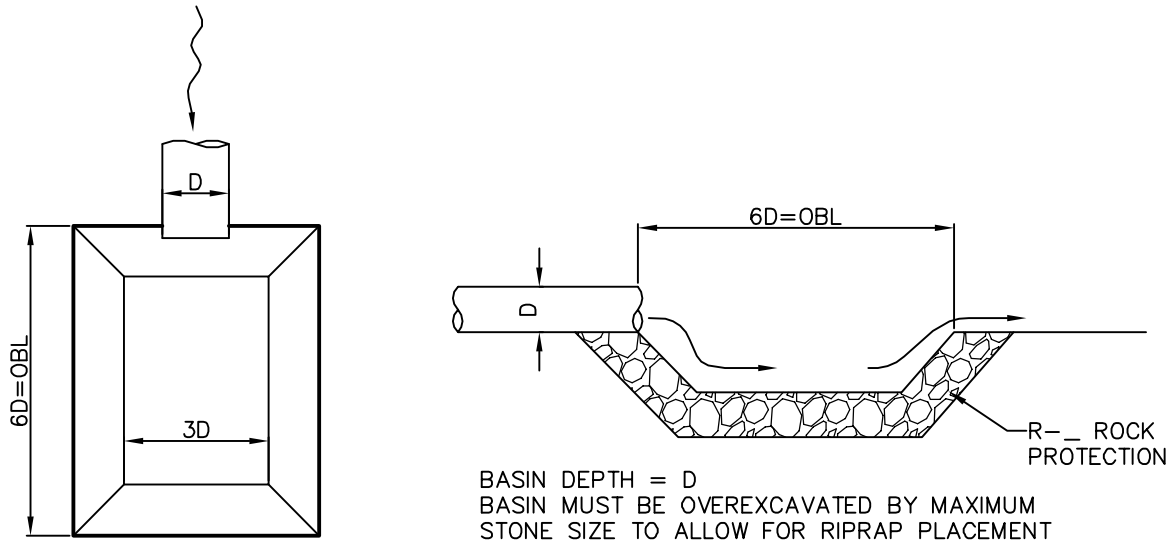

NOTES:

ALL SEDIMENT TRAP OUTLET BASINS SHALL BE INSPECTED ON AT LEAST A WEEKLY BASIS AND AFTER EACH RUNOFF EVENT.

DISPLACED RIPRAP WITHIN THE OUTLET BASIN SHALL BE REPLACED IMMEDIATELY.

SIDE SLOPES SHALL NOT EXCEED 1.5H:1V.

STANDARD CONSTRUCTION DETAIL #8-6
SEDIMENT TRAP OUTLET BASIN DETAIL

NOT TO SCALE

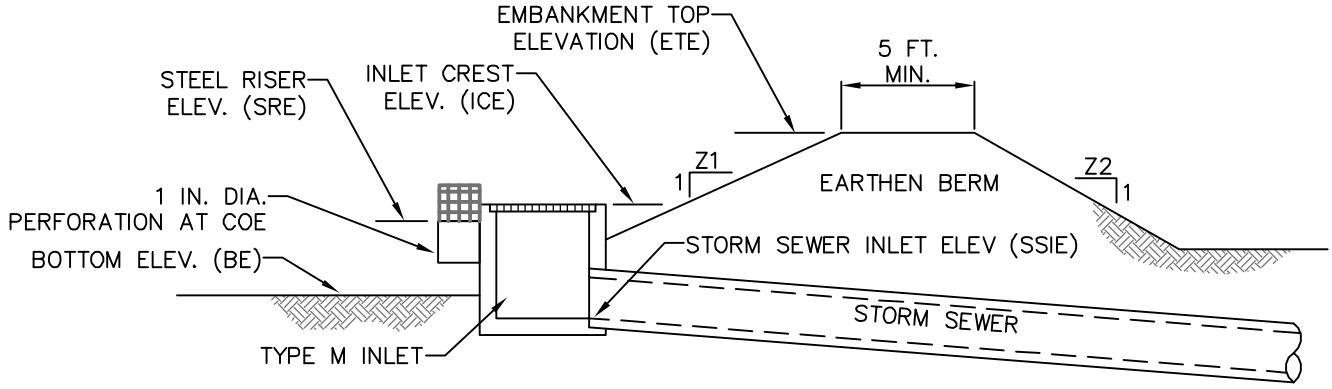

SECTION VIEW

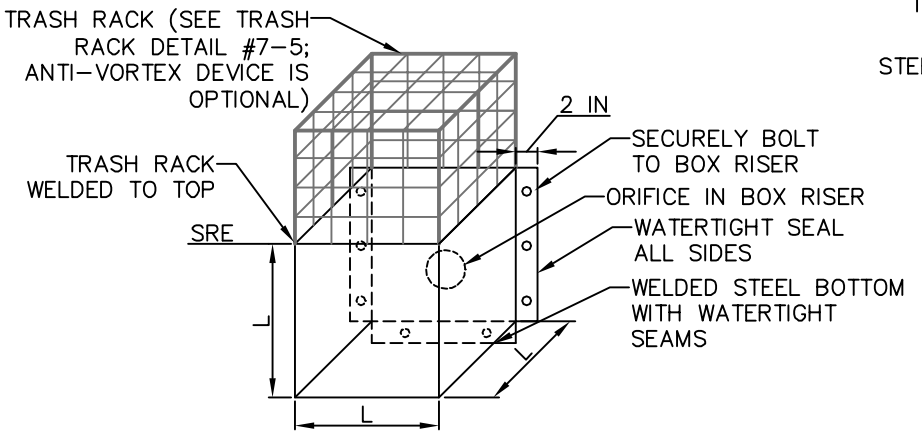

FABRICATED STEEL RISER DETAIL

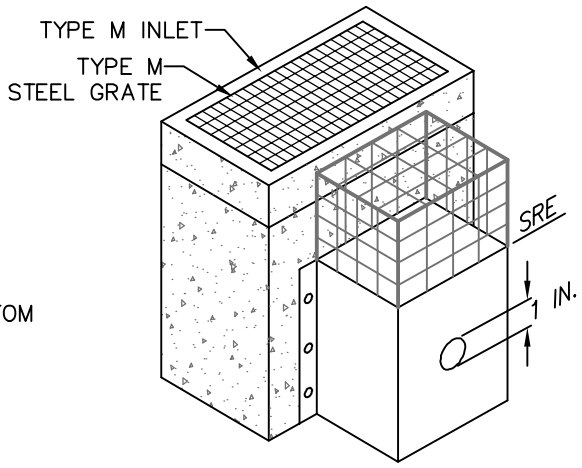

TYPE M WITH E&S RISER DETAIL

TRAP NO.	Z1 (FT)	Z2 (FT)	FABRICATED RISER			STORM SEWER INVERT ELEV. SSIE (FT)	INLET CREST ELEV. ICE (FT)	EMBANK. TOP ELEV. ETE (FT)	BOTTOM ELEV. BE (FT)
			LENGTH L (FT)	STEEL RISER ELEV. SRE (FT)	PERF. ELEV COE (FT)				
88	88	88	88	8888.88	8888.88	8888.88	8888.88	8888.88	8888.88

NOTES:

FILL MATERIAL FOR THE BERM SHALL BE FREE OF ROOTS, OR OTHER WOODY VEGETATION, ORGANIC MATERIAL, LARGE STONES, AND OTHER OBJECTIONABLE MATERIALS. THE BERM SHALL BE COMPACTED IN LAYERED LIFTS OF NOT MORE THAN 6 TO 9 IN. THE MAXIMUM ROCK SIZE SHALL BE NO GREATER THAN 2/3 THE LIFT THICKNESS. ELEVATION BTE SHALL BE MINIMUM 24 IN. ABOVE INLET CREST ELEVATION (ICE).

UPON COMPLETION, THE BERM SHALL BE SEEDED, MULCHED, BLANKETED OR OTHERWISE STABILIZED ACCORDING TO THE SPECIFICATIONS OF THE E&S PLAN DRAWINGS. ALL SEDIMENT TRAPS SHALL BE INSPECTED AT LEAST WEEKLY AND AFTER EACH RUNOFF EVENT.

ACCESS FOR SEDIMENT REMOVAL AND OTHER REQUIRED MAINTENANCE ACTIVITIES SHALL BE PROVIDED.

A CLEAN OUT STAKE SHALL BE PLACED NEAR THE CENTER OF EACH TRAP. ACCUMULATED SEDIMENT SHALL BE REMOVED WHEN IT HAS REACHED THE CLEAN OUT ELEVATION ON THE STAKE AND THE TRAP RESTORED TO ITS ORIGINAL DIMENSIONS. DISPOSE OF MATERIALS REMOVED FROM THE TRAP IN THE MANNER DESCRIBED IN THE E&S PLAN.

CHECK BERMS FOR EROSION, PIPING AND SETTLEMENT. CLOGGED OR DAMAGED INLETS SHALL BE IMMEDIATELY RESTORED TO THE DESIGN SPECIFICATIONS.

REMOVE ACCUMULATED SEDIMENT AND STABILIZE DISTURBED AREAS INSIDE THE TRAP BEFORE CONVERSION TO A STORMWATER MANAGEMENT FACILITY.

STANDARD CONSTRUCTION DETAIL #8-7

TYPE M INLET SEDIMENT TRAP

NOT TO SCALE

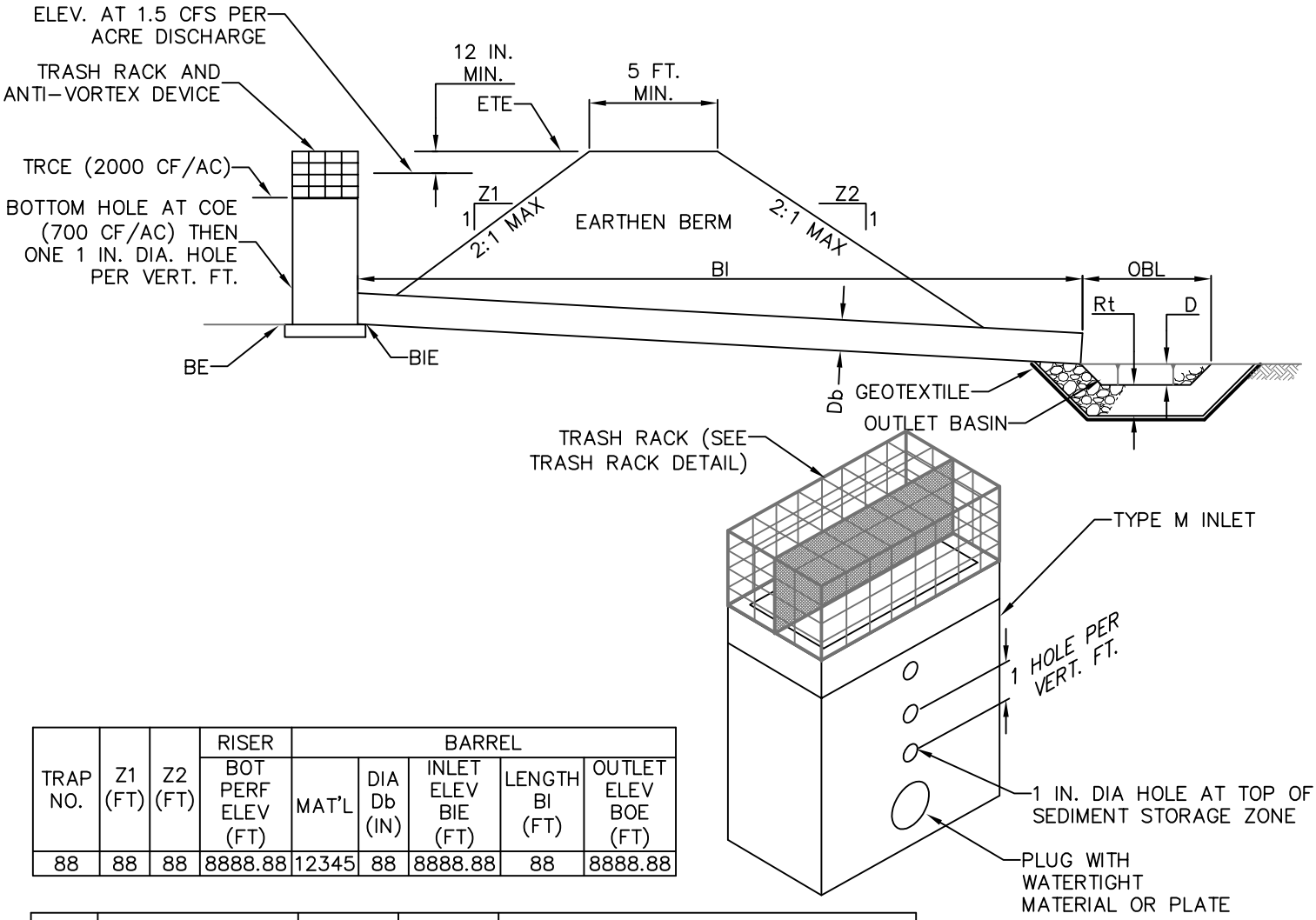

TRAP NO.	Z1 (FT)	Z2 (FT)	RISER	BARREL				
			BOT PERF ELEV (FT)	MAT'L	DIA Db (IN)	INLET ELEV BIE (FT)	LENGTH BI (FT)	OUTLET ELEV BOE (FT)
88	88	88	8888.88	12345	88	8888.88	88	8888.88

TRAP NO.	EMBANKMENT		CLEAN OUT ELEV COE (FT)	BOTTOM ELEV BE (FT)	OUTLET BASIN				
	TOP ELEV ETE (FT)	TOP WIDTH Etw (FT)			RIPRAP SIZE (R-_)	ROCK THICK Rt (IN)	DEPTH D (IN)	WIDTH OBW (FT)	LENGTH OBL (FT)
88	8888.88	8888.88	8888.88	8888.88	8	88	88	88	88

NOTES:

FILL MATERIAL FOR THE EMBANKMENTS SHALL BE FREE OF ROOTS, OR OTHER WOODY VEGETATION, ORGANIC MATERIAL, LARGE STONES, AND OTHER OBJECTIONABLE MATERIALS. THE EMBANKMENT SHALL BE COMPACTED IN LAYERED LIFTS OF NOT MORE THAN 6 TO 9 IN. THE MAXIMUM ROCK SIZE SHALL BE NO GREATER THAN 2/3 THE LIFT THICKNESS.

UPON COMPLETION, THE EMBANKMENT SHALL BE SEEDED AND MULCHED OR OTHERWISE STABILIZED ACCORDING TO THE SPECIFICATIONS OF THE E&S PLAN DRAWINGS.

ALL SEDIMENT TRAPS SHALL BE INSPECTED AT LEAST WEEKLY AND AFTER EACH RUNOFF EVENT.

ACCESS FOR SEDIMENT REMOVAL AND OTHER REQUIRED MAINTENANCE ACTIVITIES SHALL BE PROVIDED.

A CLEAN OUT STAKE SHALL BE PLACED NEAR THE CENTER OF EACH TRAP. ACCUMULATED SEDIMENT SHALL BE REMOVED WHEN IT HAS REACHED THE CLEAN OUT ELEVATION ON THE STAKE AND THE TRAP RESTORED TO ITS ORIGINAL DIMENSIONS. DISPOSE OF MATERIALS REMOVED FROM THE TRAP IN THE MANNER DESCRIBED IN THE E&S PLAN.

CHECK EMBANKMENTS, SPILLWAYS, AND OUTLETS FOR EROSION, PIPING AND SETTLEMENT. CLOGGED OR DAMAGED SPILLWAYS AND/OR EMBANKMENTS SHALL BE IMMEDIATELY RESTORED TO THE DESIGN SPECIFICATIONS. DISPLACED RIPRAP WITHIN THE OUTLET PROTECTION SHALL BE REPLACED IMMEDIATELY.

ACCUMULATED SEDIMENT SHALL BE REMOVED AND DISTURBED AREAS INSIDE THE TRAP SHALL BE STABILIZED BEFORE CONVERSION TO STORMWATER MANAGEMENT FACILITY.

STANDARD CONSTRUCTION DETAIL #8-8

CONCRETE RISER WITH TEMPORARY DEWATERING HOLES

NOT TO SCALE

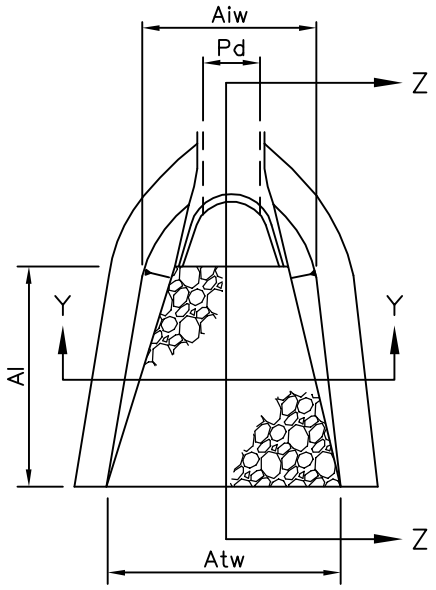

PLAN VIEW

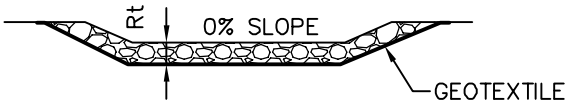

SECTION Y–Y

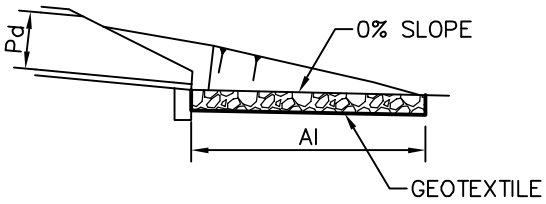

SECTION Z–Z

OUTLET NO.	PIPE DIA Pd (IN)	RIPRAP		APRON		
		SIZE R––	THICK. Rt (IN)	LENGTH Al (FT)	INITIAL WIDTH Aiw (FT)	TERMINAL WIDTH Atw (FT)
88	88	8	88	88	88	88

NOTES:

ALL APRONS SHALL BE CONSTRUCTED TO THE DIMENSIONS SHOWN. TERMINAL WIDTHS SHALL BE ADJUSTED AS NECESSARY TO MATCH RECEIVING CHANNELS.

ALL APRONS SHALL BE INSPECTED AT LEAST WEEKLY AND AFTER EACH RUNOFF EVENT. DISPLACED RIPRAP WITHIN THE APRON SHALL BE REPLACED IMMEDIATELY.

STANDARD CONSTRUCTION DETAIL #9-1

RIPRAP APRON AT PIPE OUTLET WITH FLARED END SECTION OR ENDWALL

NOT TO SCALE

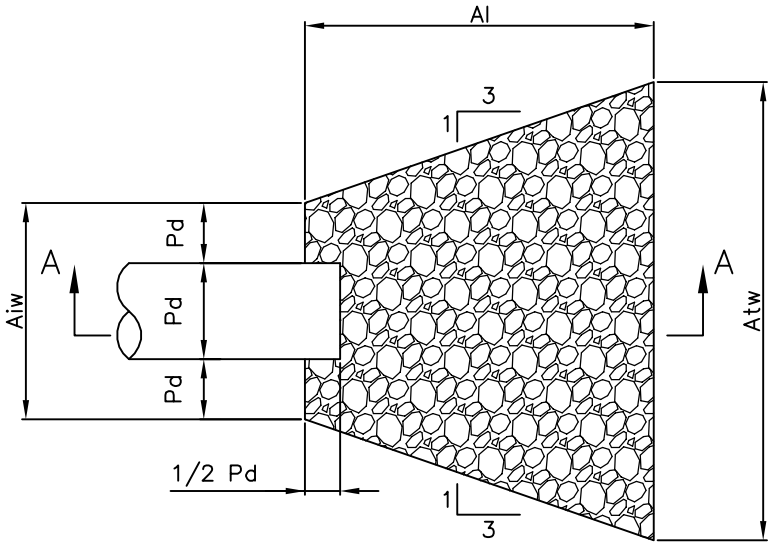

PLAN VIEW

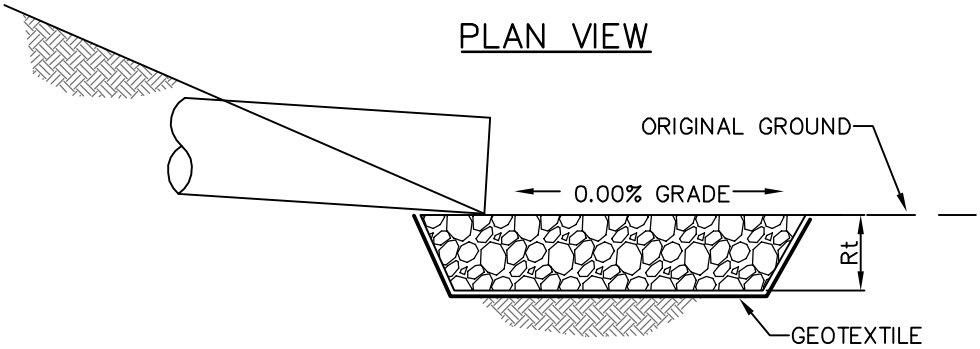

SECTION A–A

OUTLET NO.	PIPE DIA Pd (IN)	RIPRAP		APRON		
		SIZE R––	THICK. Rt (IN)	LENGTH Al (FT)	INITIAL WIDTH Aiw (FT)	TERMINAL WIDTH Atw (FT)
88	88	8	88	88	88	88

NOTES:

ALL APRONS SHALL BE CONSTRUCTED TO THE DIMENSIONS SHOWN. TERMINAL WIDTHS SHALL BE ADJUSTED AS NECESSARY TO MATCH RECEIVING CHANNELS.

ALL APRONS SHALL BE INSPECTED AT LEAST WEEKLY AND AFTER EACH RUNOFF EVENT. DISPLACED RIPRAP WITHIN THE APRON SHALL BE REPLACED IMMEDIATELY.

EXTEND RIPRAP ON BACK SIDE OF APRON TO AT LEAST 1/2 DEPTH OF PIPE ON BOTH SIDES TO PREVENT SCOUR AROUND THE PIPE.

STANDARD CONSTRUCTION DETAIL #9-2

RIPRAP APRON AT PIPE OUTLET
NO FLARED ENDWALL

NOT TO SCALE

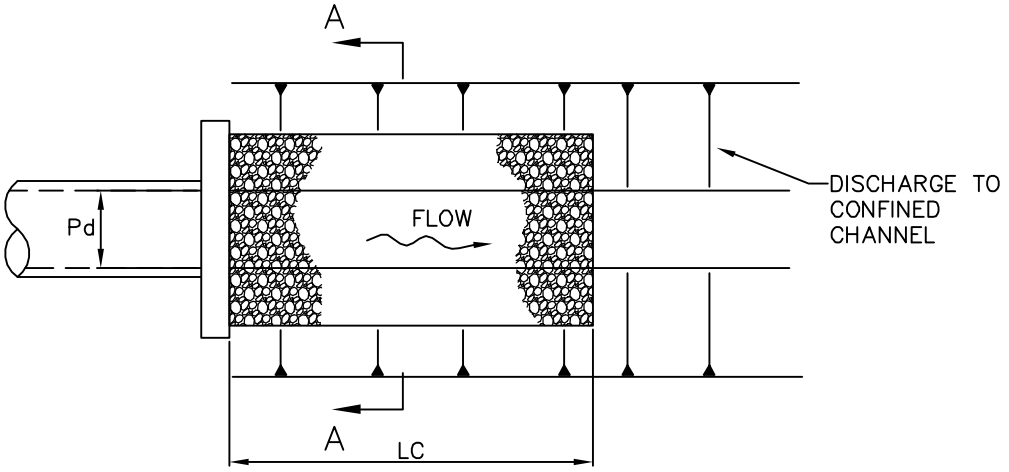

PLAN VIEW

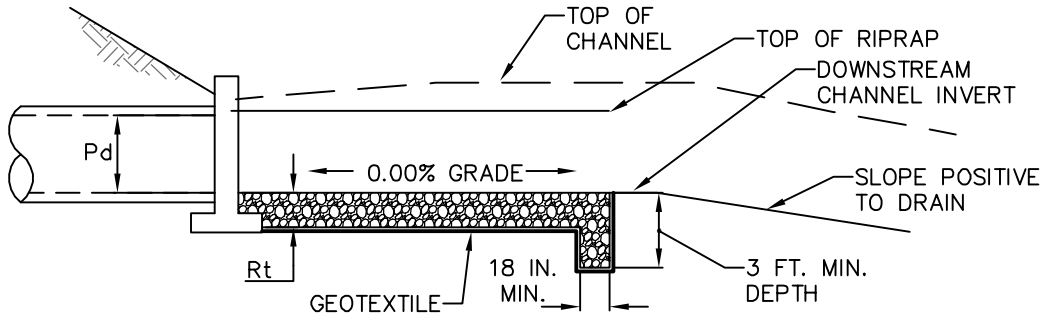

SECTION VIEW

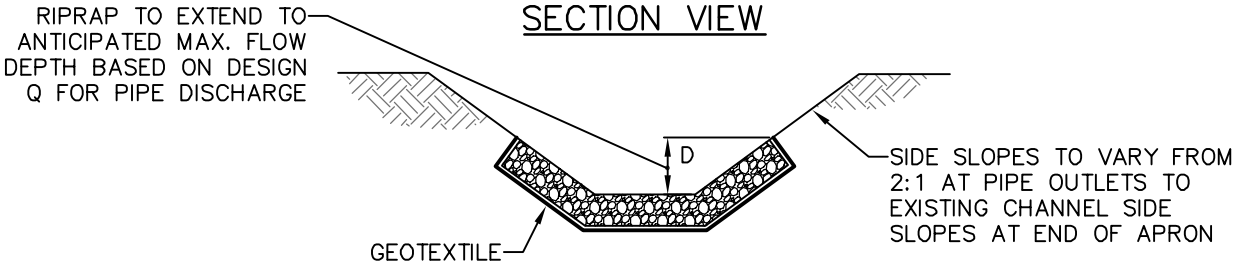

SECTION A–A

OUTLET NO.	PIPE DIA Pd (IN)	RIPRAP		APRON					
		SIZE R––	THICK. Rt (IN)	LENGTH LC (FT)	INITIAL BOTTOM WIDTH (AT ENDWALL) (FT)	END WIDTH (FT)	INITIAL TOP WIDTH (AT ENDWALL) (FT)	END TOP WIDTH (FT)	SIDE SLOPES H:V
88	88	8	88	88	88	88	88	88	88

NOTES:

ALL APRONS SHALL BE CONSTRUCTED TO THE DIMENSIONS SHOWN. TERMINAL WIDTHS SHALL BE ADJUSTED AS NECESSARY TO MATCH RECEIVING CHANNELS.

ALL APRONS SHALL BE INSPECTED AT LEAST WEEKLY AND AFTER EACH RUNOFF EVENT. DISPLACED RIPRAP WITHIN THE APRON SHALL BE REPLACED IMMEDIATELY.

STANDARD CONSTRUCTION DETAIL #9-3
RIPRAP APRON AT PIPE OUTLET TO AN EXISTING CHANNEL

NOT TO SCALE

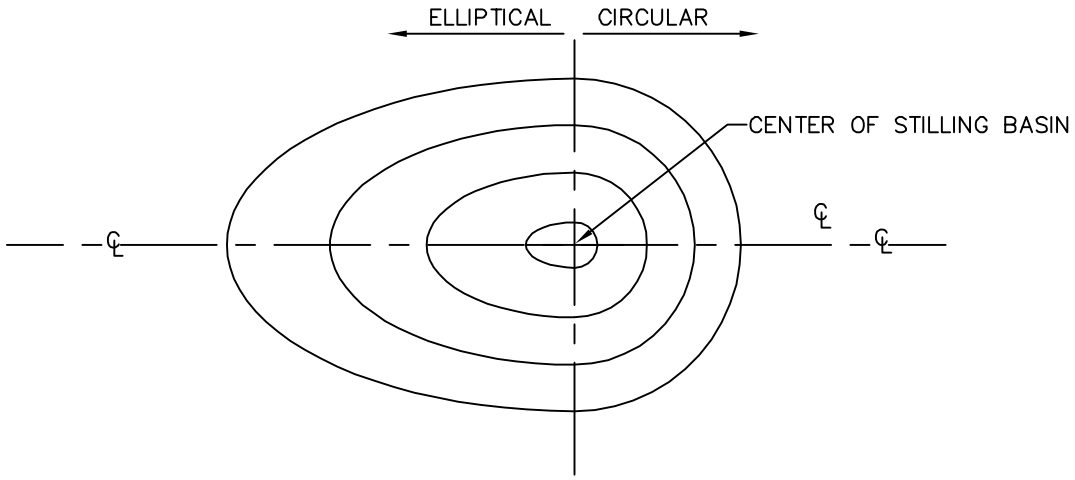

PLAN VIEW

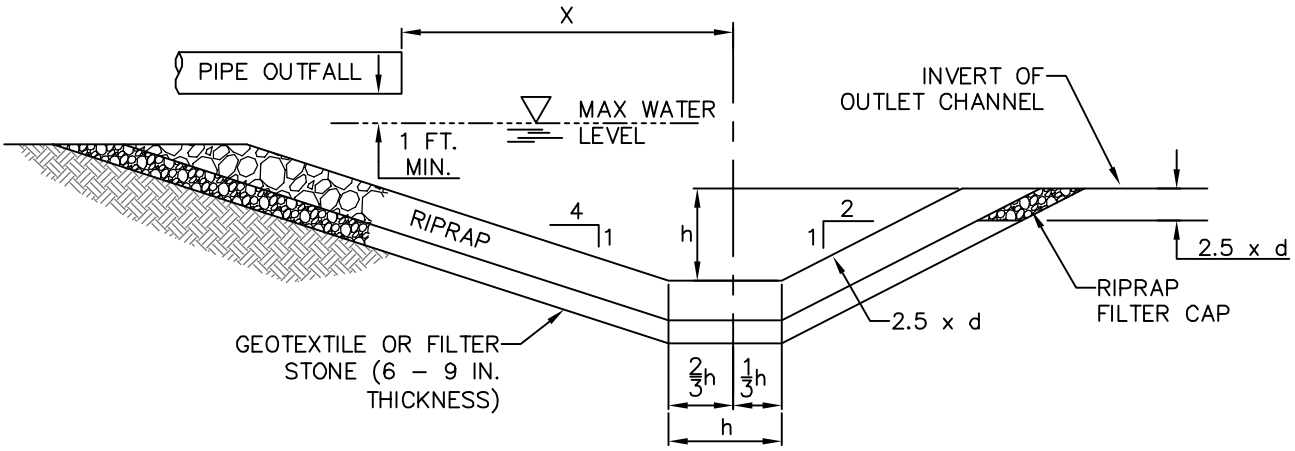

SECTION ALONG CENTERLINE

OUTLET NO.	X (FT)	h (FT)	RIPRAP SIZE (R–_)	d50 STONE SIZE (IN)
88	88	88	8	88

NOTES:

RIPRAP THICKNESS SHALL BE 1.5 TIMES THE MAXIMUM STONE SIZE.

STANDARD CONSTRUCTION DETAIL #9-4
STILLING BASIN

NOT TO SCALE

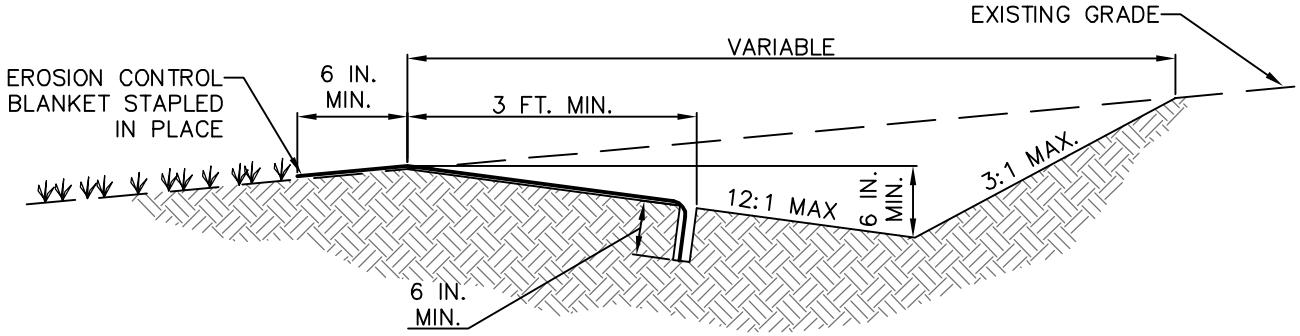

SECTION A–A

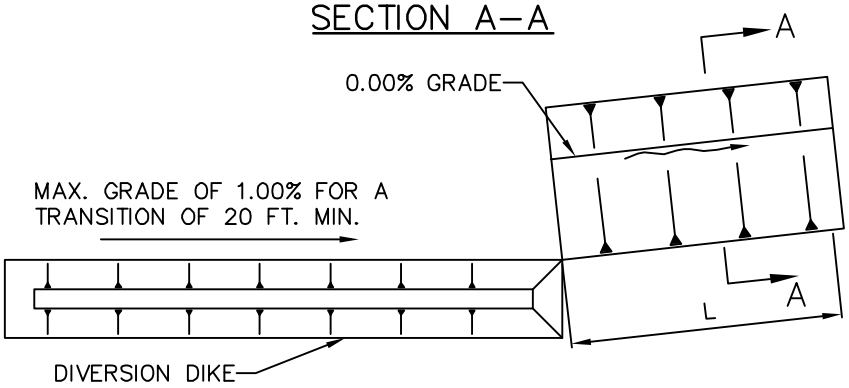

PLAN VIEW

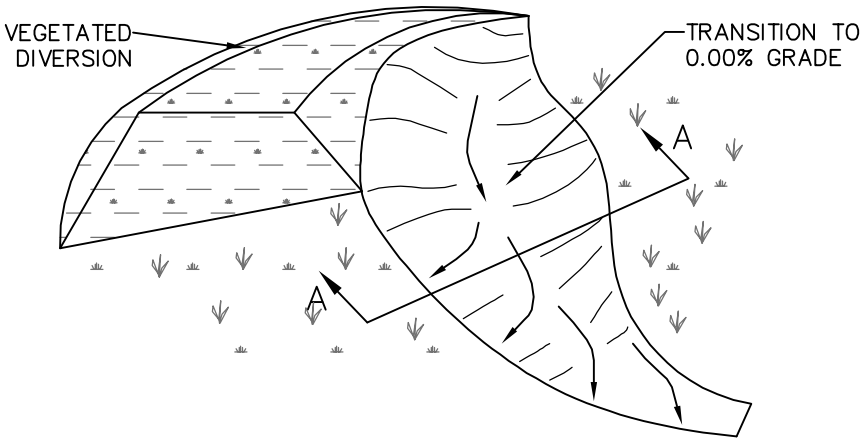

ISOMETRIC VIEW

STANDARD CONSTRUCTION DETAIL #9-5
EARTHEN LEVEL SPREADER

NOT TO SCALE

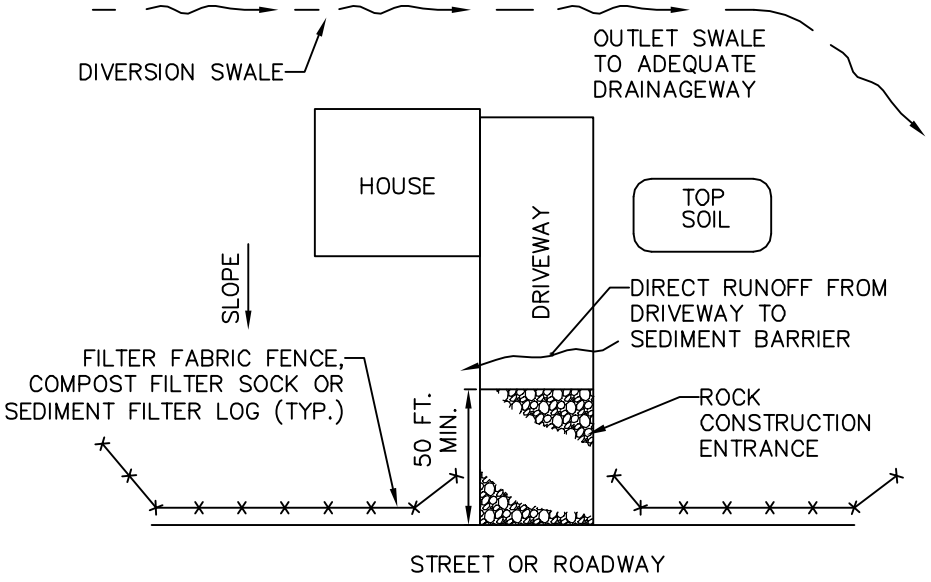

PLAN VIEW

NOTES:

THE UPSLOPE DIVERSION CHANNEL SHOULD BE INSTALLED WHEREVER THE LOT EXTENDS MORE THAN 150 FEET ABOVE THE ROADWAY OR WHERE RUNOFF FORM AREAS ABOVE THE LOT IS NOT OTHERWISE DIVERTED AWAY FROM THE LOT. THE CHANNEL SHOULD BE PROPERLY SIZED AND PROVIDED WITH A SUITABLE PROTECTIVE LINING. THE DESIGNER AND/OR CONTRACTOR MUST EXERCISE CAUTION TO PROTECT ALL DOWNSTREAM PROPERTY OWNERS WHEN SELECTING A DISCHARGE POINT FOR THIS CHANNEL.

STANDARD CONSTRUCTION DETAIL #10-1

TYPICAL ON-LOT BMPs FOR LOT ABOVE ROADWAY

NOT TO SCALE

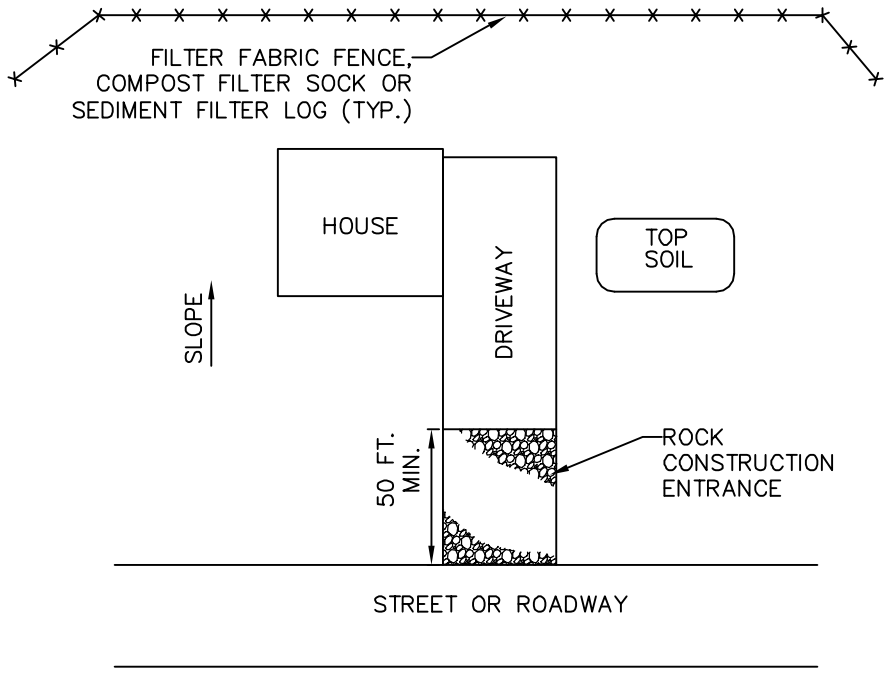

PLAN VIEW

NOTES:

THE AREA DOWNSLOPE OF THE FILTER FENCE/COMPOST SOCK BARRIER/SEDIMENT FILTER LOG MAY NOT BE UNDER DEVELOPMENT OR OTHERWISE DISTURBED.

STANDARD CONSTRUCTION DETAIL #10-2
TYPICAL ON-LOT BMPs FOR LOT BELOW ROADWAY

NOT TO SCALE

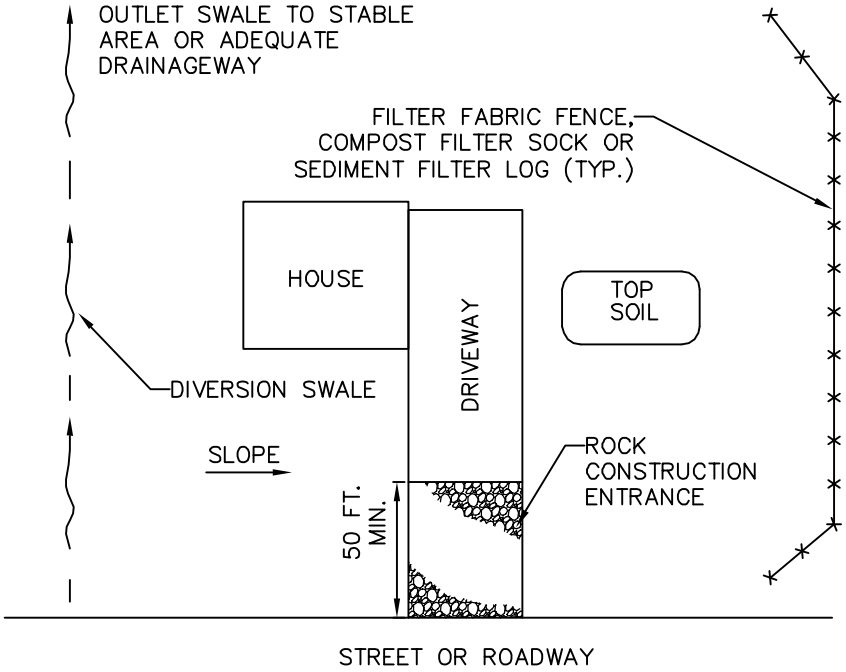

PLAN VIEW

NOTES:

THE AREA DOWNSLOPE OF THE FILTER FENCE/COMPOST SOCK BARRIER/SEDIMENT FILTER LOG MAY NOT BE UNDER DEVELOPMENT OR OTHERWISE DISTURBED.

THE UPSLOPE DIVERSION CHANNEL SHOULD BE INSTALLED WHEREVER RUNOFF FROM AREAS ABOVE THE LOT ARE NOT OTHERWISE DIVERTED AWAY FROM THE LOT. THE CHANNEL SHOULD BE PROPERLY SIZED AND PROVIDED WITH A SUITABLE PROTECTIVE LINING. THE DESIGNER AND/OR CONTRACTOR MUST EXERCISE CAUTION TO PROTECT ALL DOWNSTREAM PROPERTY OWNERS WHEN SELECTING A DISCHARGE POINT FOR THIS CHANNEL.

IN AREAS WHERE SLOPE IS AT AN OBLIQUE ANGLE TO THE ROADWAY, BMPS SHALL BE ADJUSTED ACCORDINGLY.

DIVERSION CHANNEL MAY OUTLET TO ROADSIDE DITCH OR STORM SEWER SYSTEM, BUT NOT ONTO STREET OR ROADWAY.

STANDARD CONSTRUCTION DETAIL #10-3

TYPICAL ON-LOT BMPs FOR LOT ALONG ASCENDING OR DESCENDING ROADWAY

NOT TO SCALE

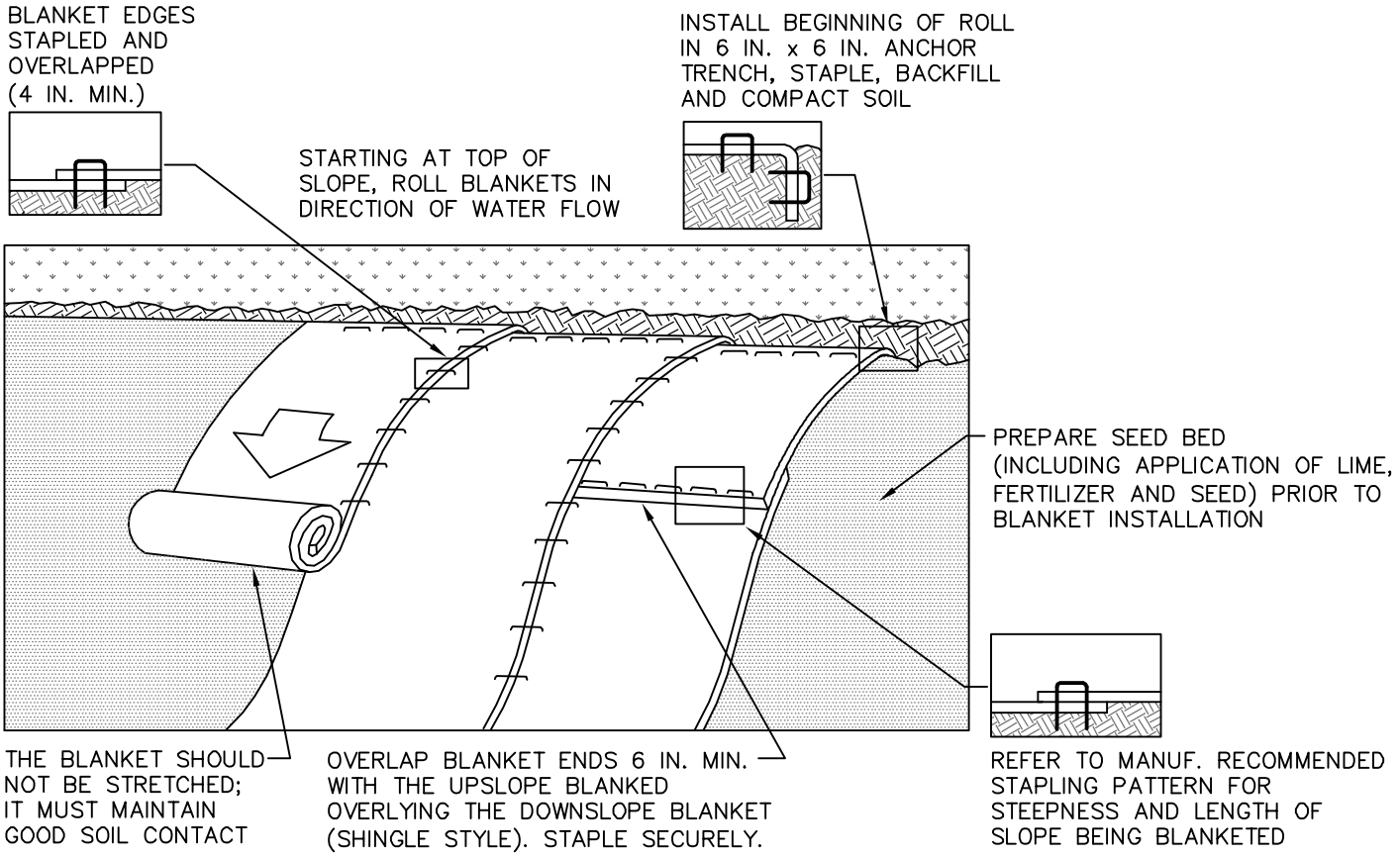

NOTES:

SEED AND SOIL AMENDMENTS SHALL BE APPLIED ACCORDING TO THE RATES IN THE PLAN DRAWINGS PRIOR TO INSTALLING THE BLANKET.

PROVIDE ANCHOR TRENCH AT TOE OF SLOPE IN SIMILAR FASHION AS AT TOP OF SLOPE.

SLOPE SURFACE SHALL BE FREE OF ROCKS, CLODS, STICKS, AND GRASS.

BLANKET SHALL HAVE GOOD CONTINUOUS CONTACT WITH UNDERLYING SOIL THROUGHOUT ENTIRE LENGTH. LAY BLANKET LOOSELY AND STAKE OR STAPLE TO MAINTAIN DIRECT CONTACT WITH SOIL. DO NOT STRETCH BLANKET.

THE BLANKET SHALL BE STAPLED IN ACCORDANCE WITH THE MANUFACTURER'S RECOMMENDATIONS.

BLANKETED AREAS SHALL BE INSPECTED WEEKLY AND AFTER EACH RUNOFF EVENT UNTIL PERENNIAL VEGETATION IS ESTABLISHED TO A MINIMUM UNIFORM 70% COVERAGE THROUGHOUT THE BLANKETED AREA. DAMAGED OR DISPLACED BLANKETS SHALL BE RESTORED OR REPLACED WITHIN 4 CALENDAR DAYS.

STANDARD CONSTRUCTION DETAIL #11-1

EROSION CONTROL BLANKET INSTALLATION

NOT TO SCALE

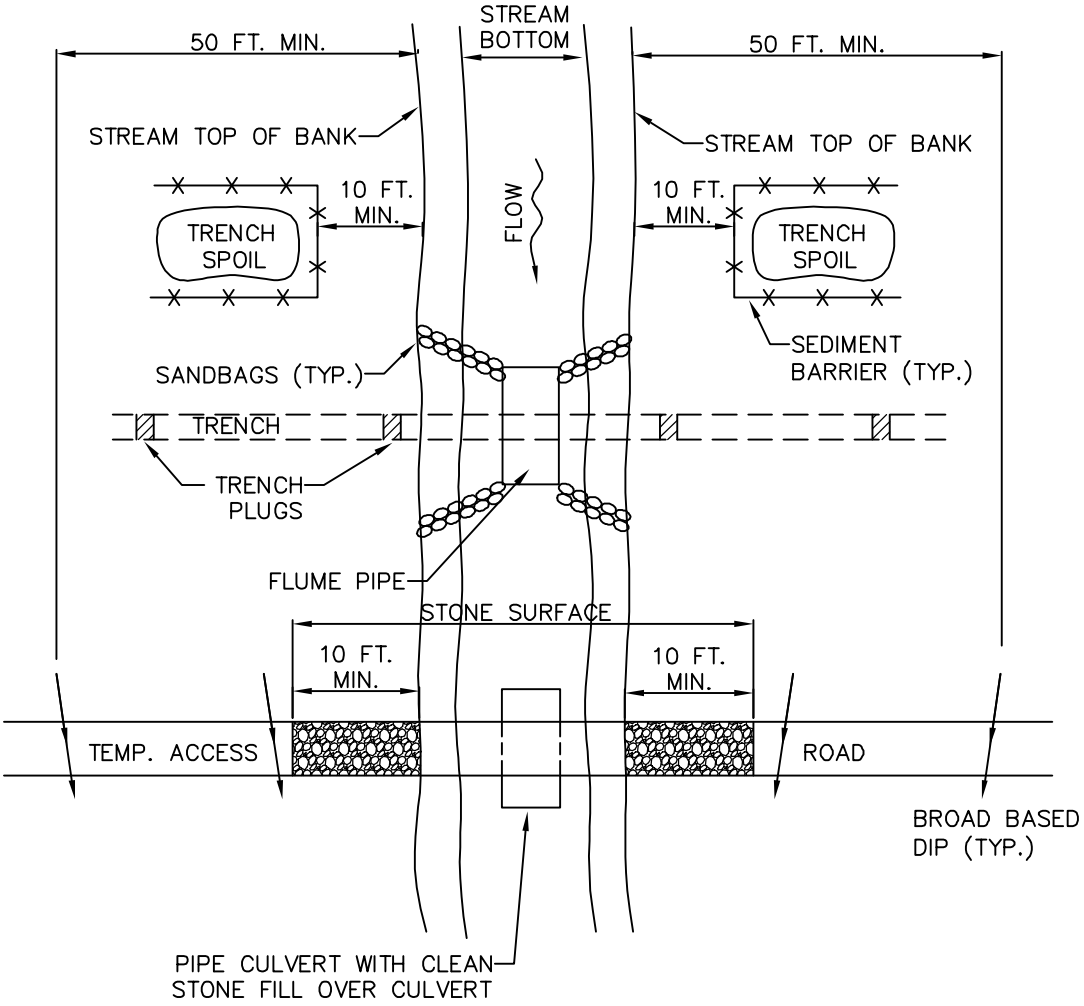

NOTES:

GRUBBING SHALL NOT TAKE PLACE WITHIN 50 FEET OF TOP-OF-BANK UNTIL ALL MATERIALS REQUIRED TO COMPLETE CROSSING ARE ON SITE AND PIPE IS READY FOR INSTALLATION.

PIPE CULVERT FOR ACCESS ROAD AND FLUME PIPE MAY BE ONE CONTINUOUS PIPE.

TRENCH PLUGS SHALL BE INSTALLED WITHIN THE TRENCH ON BOTH SIDES OF THE STREAM CHANNEL (STANDARD CONSTRUCTION DETAIL #13-4).

WATER ACCUMULATING WITHIN THE WORK AREA SHALL BE PUMPED TO A PUMPED WATER FILTER BAG OR SEDIMENT TRAP PRIOR TO DISCHARGING INTO ANY SURFACE WATER.

HAZARDOUS OR POLLUTANT MATERIAL STORAGE AREAS SHALL BE LOCATED AT LEAST 100 FEET BACK FROM THE TOP OF STREAMBANK.

ALL EXCESS EXCAVATED MATERIAL SHALL BE IMMEDIATELY REMOVED FROM THE STREAM CROSSING AREA.

ALL DISTURBED AREAS WITHIN 50 FEET OF TOP-OF-BANK SHALL BE BLANKETED OR MATTED WITHIN 24 HOURS OF INITIAL DISTURBANCE FOR MINOR STREAMS OR 48 HOURS OF INITIAL DISTURBANCE FOR MAJOR STREAMS UNLESS OTHERWISE AUTHORIZED. APPROPRIATE STREAMBANK PROTECTION SHALL BE PROVIDED WITHIN THE CHANNEL.

STANDARD CONSTRUCTION DETAIL #13-1

TYPICAL UTILITY LINE STREAM CROSSING WITH OPTIONAL ACCESS ROAD

NOT TO SCALE

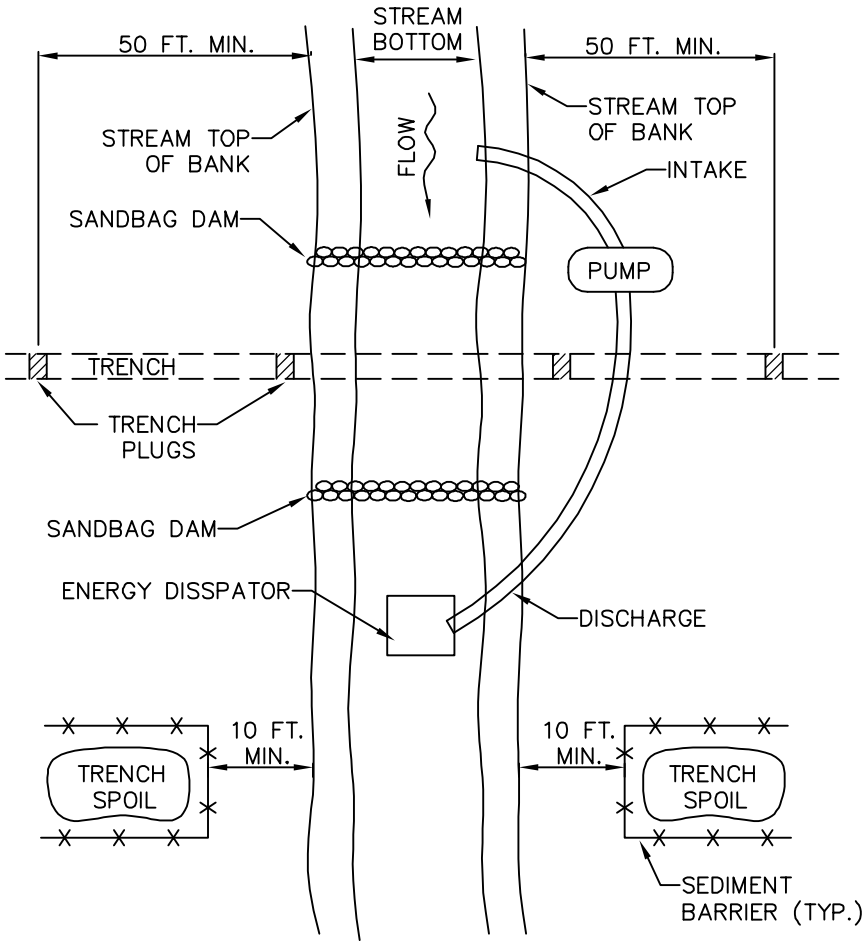

NOTES:

GRUBBING SHALL NOT TAKE PLACE WITHIN 50 FEET OF TOP-OF-BANK UNTIL ALL MATERIALS REQUIRED TO COMPLETE CROSSING ARE ON SITE AND PIPE IS READY FOR INSTALLATION.

BYPASS PUMP INTAKE SHALL BE MAINTAINED A SUFFICIENT DISTANCE FROM THE BOTTOM TO PREVENT PUMPING OF CHANNEL BOTTOM MATERIALS.

TRENCH PLUGS SHALL BE INSTALLED WITHIN THE TRENCH ON BOTH SIDES OF THE STREAM CHANNEL (STANDARD CONSTRUCTION DETAIL #13-4).

WATER ACCUMULATING WITHIN THE WORK AREA SHALL BE PUMPED TO A PUMPED WATER FILTER BAG OR SEDIMENT TRAP PRIOR TO DISCHARGING INTO ANY SURFACE WATER.

HAZARDOUS OR POLLUTANT MATERIAL STORAGE AREAS SHALL BE LOCATED AT LEAST 100 FEET BACK FROM THE TOP OF STREAMBANK.

ALL EXCESS EXCAVATED MATERIAL SHALL BE IMMEDIATELY REMOVED FROM THE STREAM CROSSING AREA.

ALL DISTURBED AREAS WITHIN 50 FEET OF TOP-OF-BANK SHALL BE BLANKETED OR MATTED WITHIN 24 HOURS OF INITIAL DISTURBANCE FOR MINOR STREAMS OR 48 HOURS OF INITIAL DISTURBANCE FOR MAJOR STREAMS UNLESS OTHERWISE AUTHORIZED.

APPROPRIATE STREAMBANK PROTECTION SHALL BE PROVIDED WITHIN THE CHANNEL.

STANDARD CONSTRUCTION DETAIL #13-2

TYPICAL UTILITY LINE STREAM CROSSING WITH PUMP BYPASS

NOT TO SCALE

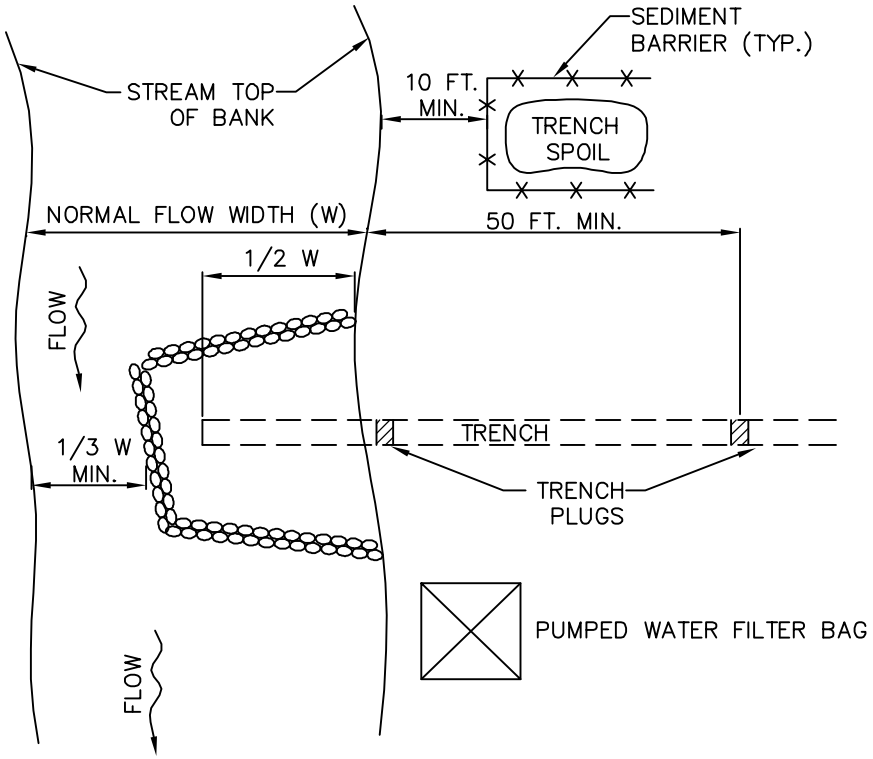

NOTES:

GRUBBING SHALL NOT TAKE PLACE WITHIN 50 FEET OF TOP-OF-BANK UNTIL ALL MATERIALS REQUIRED TO COMPLETE CROSSING ARE ON SITE AND PIPE IS READY FOR INSTALLATION.

TRENCH PLUGS SHALL BE INSTALLED WITHIN THE TRENCH ON BOTH SIDES OF THE STREAM CHANNEL (STANDARD CONSTRUCTION DETAIL #13-4).

WATER ACCUMULATING WITHIN THE WORK AREA SHALL BE PUMPED TO A PUMPED WATER FILTER BAG OR SEDIMENT TRAP PRIOR TO DISCHARGING INTO ANY SURFACE WATER.

HAZARDOUS OR POLLUTANT MATERIAL STORAGE AREAS SHALL BE LOCATED AT LEAST 100 FEET BACK FROM THE TOP OF STREAMBANK.

ALL EXCESS EXCAVATED MATERIAL SHALL BE IMMEDIATELY REMOVED FROM THE STREAM CROSSING AREA.

ALL DISTURBED AREAS WITHIN 50 FEET OF TOP-OF-BANK SHALL BE BLANKETED OR MATTED WITHIN 24 HOURS OF INITIAL DISTURBANCE FOR MINOR STREAMS OR 48 HOURS OF INITIAL DISTURBANCE FOR MAJOR STREAMS UNLESS OTHERWISE AUTHORIZED.

APPROPRIATE STREAMBANK PROTECTION SHALL BE PROVIDED WITHIN THE CHANNEL.

STANDARD CONSTRUCTION DETAIL #13-3
TYPICAL UTILITY LINE STREAM CROSSING WITH COFFERDAM

NOT TO SCALE

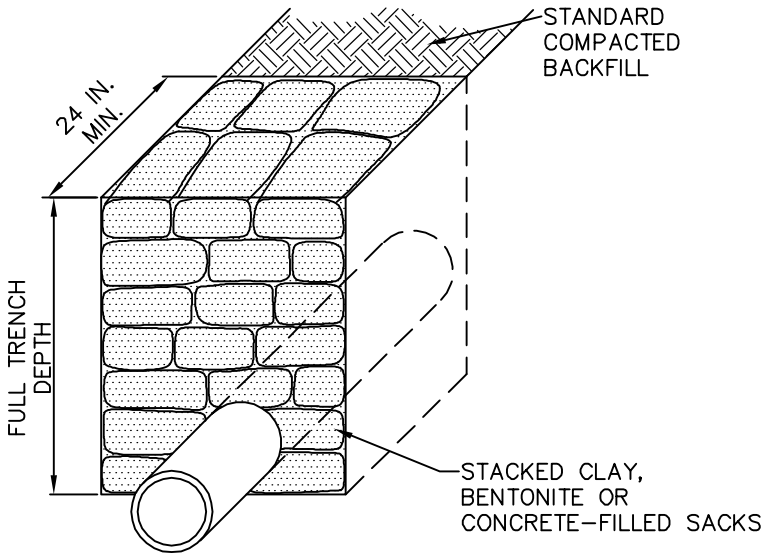

SECTION VIEW

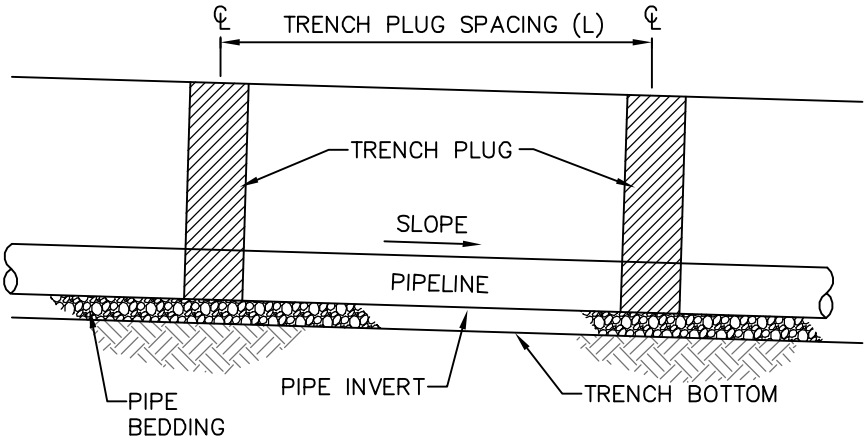

PROFILE VIEW

PA DEP EROSION CONTROL MANUAL TABLE 13.1

MAXIMUM SPACING AND MATERIALS FOR TRENCH PLUGS

TRENCH SLOPE (%)	SPACING L (FT)	PLUG MATERIAL
< 5	1000	* CLAY, BENTONITE, OR CONCRETE FILLED SACKS
5 – 15	500	* CLAY, BENTONITE, OR CONCRETE FILLED SACKS
15 – 25	300	* CLAY, BENTONITE, OR CONCRETE FILLED SACKS
25 – 35	200	* CLAY, BENTONITE, OR CONCRETE FILLED SACKS
35 – 100	100	* CLAY, BENTONITE, OR CONCRETE FILLED SACKS
> 100	50	CEMENT BAGS (WETTED) OR MORTARED STONE

* TOPSOIL MAY NOT BE USED TO FILL SACKS

NOTES:

IMPERVIOUS TRENCH PLUGS ARE REQUIRED FOR ALL STREAM, RIVER, WETLAND, OR OTHER WATER BODY CROSSINGS.

STANDARD CONSTRUCTION DETAIL #13-4

TRENCH PLUG INSTALLATION

NOT TO SCALE