ATTACHMENT H -2

COUNTY SPECIFIC IMPACT MAPPING

(UNDER SEPARATE COVER)

Project Name: Atlantic Sunrise Project – Susquehanna County

PA DEP Application Number: E58-315

PA DEP APS Number: 878958

"I, Maw Jaw Hwang, do hereby certify pursuant to the penalties of 18 PA C.S.A. Sec 4904 to the best of my knowledge, information and belief, that the information contained in the accompanying plans, specifications and reports has been prepared in accordance with accepted engineering practice, is true and correct, and is in conformance with Chapter 105 of the rules and regulations of the Department of Environmental Protection."

Commonwealth of Pennsylvania Registered Professional Engineer, PE 077841

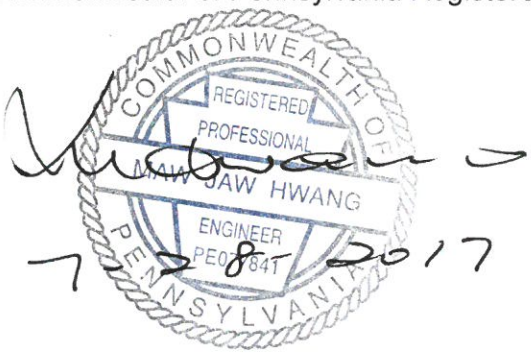

Transcontinental Gas Pipe Line Company LLC
ATLANTIC SUNRISE PROJECT
PROPOSED 30" CENTRAL PENN LINE NORTH
WATER OBSTRUCTION AND
ENCROACHMENT PERMIT IMPACT MAPS

M.P. 50.58 TO M-0166 M.P. 0.01

SUSQUEHANNA COUNTY, PENNSYLVANIA

24-1601-70-09-A-02_Susquehanna-PKG
Issued for PADEP Submittal #4
Rev. 5
07-28-2017

ISSUED DATE: JULY 28, 2017

Transcontinental Gas Pipe Line Company LLC
ATLANTIC SUNRISE PROJECT
PROPOSED 30" CENTRAL PENN LINE NORTH
WATER OBSTRUCTION AND
ENCROACHMENT PERMIT IMPACT MAPS

M.P. 50.58 TO M-0166 M.P. 0.01

SUSQUEHANNA COUNTY, PENNSYLVANIA

WOOD GROUP MUSTANG INC.
17325 PARK ROW
HOUSTON TX, 77084
(832) 809-8000

COMMONWEALTH OF PENNSYLVANIA
REGISTERED PROFESSIONAL
MAW JAW HWANG
ENGINEER

7-28-2017

MAW JAW HWANG
PA. PE NO. PE077841

ISSUED FOR PADEP SUBMITTAL #4
ISSUED DATE: JULY 28, 2017

DRAWING NUMBER	DESCRIPTION	SHEET	REVISION
24-1601-70-20-A/50.58-02	INDEX SHEET	1 OF 3	5
24-1601-70-20-A/50.58-02	NOTES SHEET	2 OF 3	2
24-1601-70-14-A/50.58-02	PROJECT LOCATION KEY MAP	3 OF 3	4
24-1601-70-09-A/AR-SU-041-01	WW-T65-21001	1 OF 1	2
24-1601-70-09-A/51.35-02	WW-T30-21001	1 OF 1	3
~~24-1601-70-20-A/51.36-02~~	~~W-T30-21001~~	~~1 OF 1~~	~~2~~
24-1601-70-20-A/51.48-02	W-T30-21002	1 OF 1	2
24-1601-70-09-A/51.69-02	WW-T12-21004A & WW-T12-21004	1 OF 1	3
24-1601-70-20-A/52.25-02	W-T12-21001A	1 OF 1	3
24-1601-70-09-A/52.37-02	WW-T12-21001	1 OF 1	3
24-1601-70-20-A/52.94-01	W-T70-21001A-1 / W-T70-21001A-2	1 OF 1	1
24-1601-70-20-A/53.30-01	W-T51-21004 / W-T51-21004-1	1 OF 1	1
24-1601-70-09-A/53.39-01	WW-T50-21001	1 OF 1	1
24-1601-70-20-A/53.73-01	W-T64-21001-1	1 OF 1	1
24-1601-70-09-A/54.11-01	WW-T50-21002 & WW-T50-21003	1 OF 1	1
24-1601-70-20-A/54.13-01	W-T50-21002 & W-T50-21003	1 OF 1	1
24-1601-70-20-A/54.35-02	W-T12-21007A	1 OF 1	3
24-1601-70-09-A/54.36-01	WW-T12-21006	1 OF 1	2
24-1601-70-09-A/55.10-02	WW-T12-21007 & WW-T12-21007A	1 OF 1	4
24-1601-70-20-A/55.10-02	W-T12-21008-1	1 OF 1	3
24-1601-70-20-A/55.39-02	W-T12-21009A / W-T12-21009A-1 / W-T12-21009A-2	1 OF 1	3
24-1601-70-09-A/M-0061-0.00-02	WW-T12-21008	1 OF 1	3
24-1601-70-20-A/M-0061-0.03-02	W-T12-21009B & W-T12-21009C	1 OF 1	3
24-1601-70-09-A/M-0061-0.09-02	WW-T92-21002 & WW-T12-21009A	1 OF 2	4
24-1601-70-09-A/M-0061-0.09-02	WW-T92-21002 & WW-T12-21009A	2 OF 2	0
24-1601-70-20-A/M-0062-0.17-01	W-T48-21002A & W-T48-21002C	1 OF 1	1
24-1601-70-20-A/56.68-01	W-T48-21001	1 OF 2	1
24-1601-70-20-A/56.68-01	W-T48-21001	2 OF 2	1
24-1601-70-09-A/56.76-01	WW-T48-21001A & WW-T48-21001	1 OF 1	1
24-1601-70-20-A/56.80-01	W-T48-21003	1 OF 1	1
24-1601-70-09-A/57.16-02	WW-T17-21001 & WB-T87-21001	1 OF 2	3
~~24-1601-70-09-A/57.16-02~~	~~WW-T17-21001 & WB-T87-21001~~	~~2 OF 2~~	~~0~~
24-1601-70-26-A/BEC-02	TYPICAL BRIDGE EQUIPMENT CROSSING DETAIL - BEC	1 OF 1	1

THIS DRAWING SUPERCEDES 24–1601–70–20–A/50.58–01

WOOD GROUP MUSTANG, INC.

DRAWING NO.	REFERENCE TITLE

NO.	DATE	BY	REVISION DESCRIPTION	W.O. NO.	CHK.	APP.
2	02/03/16	TL	ISSUED FOR INTERNAL USE	1161481	CLR	MJH
3	10/06/16	AT	ISSUED FOR PADEP SUBMITTAL #2	1161481	CLR	MJH
4	04/12/17	AT	ISSUED FOR PADEP SUBMITTAL #3	1161481	CLR	MJH
5	07/28/17	AT	ISSUED FOR PADEP SUBMITTAL #4	1161481	CLR	MJH

TRANSCONTINENTAL GAS PIPE LINE COMPANY LLC
WATER OBSTRUCTION AND ENCROACHMENT PERMIT IMPACT MAPS
ATLANTIC SUNRISE PROJECT
PROPOSED 30" CENTRAL PENN LINE NORTH
INDEX SHEET
M.P. 50.58 TO M.P. 57.30
SUSQUEHANNA COUNTY, PENNSYLVANIA

Williams

DRAWN BY: MBS	DATE: 05/08/15	ISSUED FOR BID:	SCALE: N.T.S.
CHECKED BY: JM	DATE: 05/08/15	ISSUED FOR CONSTRUCTION:	REVISION: 5
APPROVED BY: MJH	DATE: 05/08/15	DRAWING NUMBER: 24–1601–70–20–A/50.58–02	SHEET 1 OF 3
WO: 1161481		9:42am 7/27/2017 s3carls K:\LP11375\Mapping\Waterbodies\PADEP_Sub. #4 07-28-17\01-CPLN_PDEP_INDEX_SUSQUEHANNA.dwg	

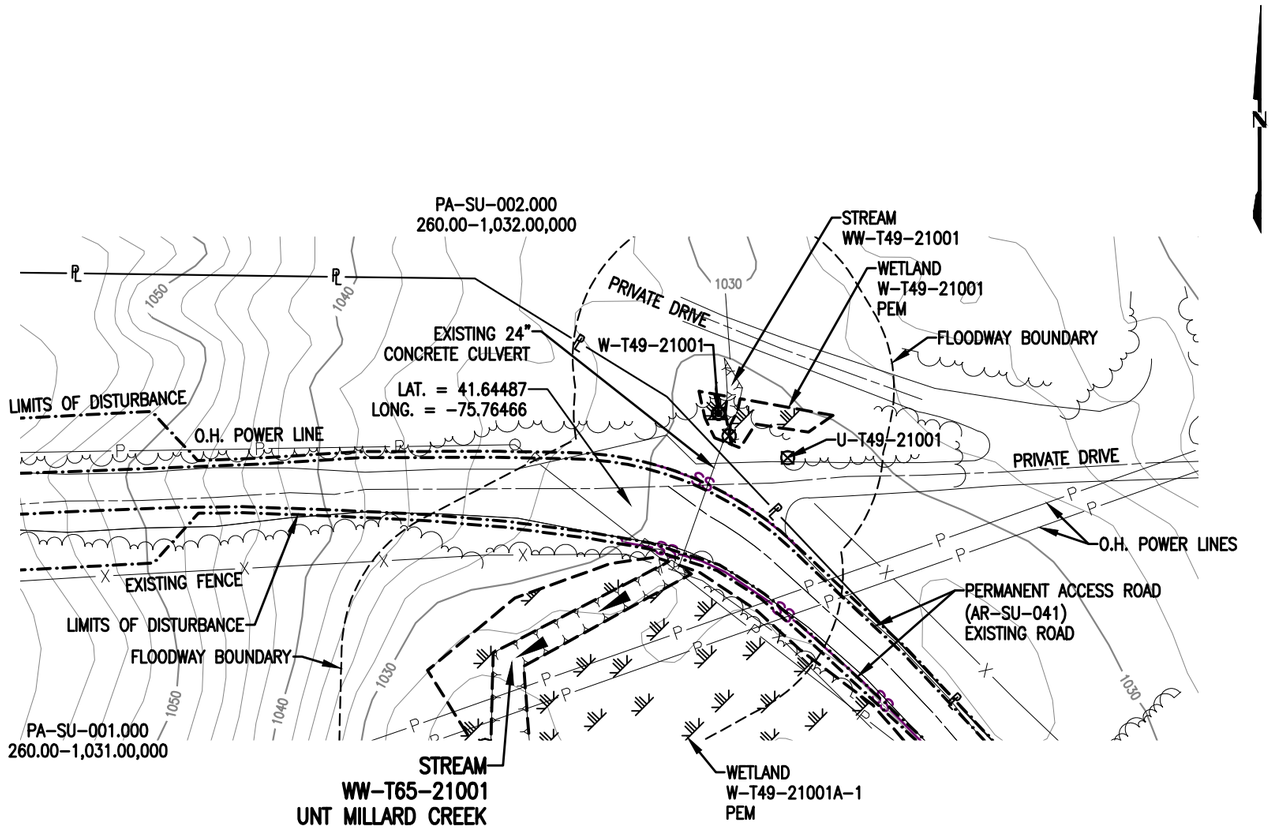

PLAN

SCALE: 1" = 50'

STREAM DISTURBANCE FOR ACCESS ROAD AR-SU-041:

STREAM WW-T65-21001	ACRE
TEMPORARY STREAM DISTURBANCE	0.0000
PERMANENT STREAM DISTURBANCE	0.0000
TOTAL STREAM DISTURBANCE	0.0000
TEMPORARY FLOODWAY DISTURBANCE	0.0728
PERMANENT FLOODWAY DISTURBANCE	0.0000
TOTAL FLOODWAY DISTURBANCE	0.0728

STREAM DIMENSION	FT.
STREAM WIDTH (TOB TO TOB)	0.00
STREAM TEMPORARY IMPACT LENGTH	0.00
STREAM PERMANENT IMPACT LENGTH	0.00
STREAM TOTAL IMPACT LENGTH	0.00
FLOODWAY FILL (CU.YDS.)	117.41

GENERAL NOTES:

1. THE TEMPORARY FLOODWAY IMPACT SHOWN ON THE DRAWING REPRESENTS THE FULL EXTENT OF THE FLOODWAY ACROSS THE EXISTING ACCESS ROAD. CONSTRUCTION ACTIVITIES WITHIN THE FLOODWAY WILL BE LIMITED TO PLACEMENT OF TIMBER MATTING OVER THE EXISTING CULVERT ON THE GRAVEL ROAD SURFACE, AS WELL AS VEHICLE TRAFFIC ALONG THE EXISTING ACCESS ROAD. NO PERMANENT FILL WILL BE PLACED OR GRADING COMPLETED WITHIN THE FLOODWAY.
2. WATERBODIES WITHOUT A FEMA-ESTABLISHED FLOODPLAIN, THE FLOODWAY IS COINCIDENT WITH A 50-FOOT OFFSET MEASURED LATERALLY FROM THE PHYSICAL TOP OF BANK OF THE WATERBODY.
3. THE CALCULATION OF FILL VOLUMES PROVIDED WITHIN THE CHAPTER 105 APPLICATION IS BASED ON THE EXTENT OF THE ACCESS ROAD LOD WITHIN THE FLOODPLAIN/FLOODWAY TO ACCOUNT FOR WORST-CASE FIELD SCENARIOS REQUIRING THE ADDITION OF A ONE FOOT-DEPTH OF GRAVEL FOR MAINTENANCE AND/OR MINOR ACCESS ROAD WIDENING FOR IMPROVED ACCESS. AS SUCH, THE FILL VOLUME IS AN OVERESTIMATION AND DOES NOT REFLECT THE ACTUAL VOLUME OF FILL REQUIRED BY THE CURRENT ACCESS ROAD DESIGN, AS PRESENTED WITHIN THE CHAPTER 102 PERMIT. THE INCLUSION OF THE OVERESTIMATED FILL VOLUMES WITHIN THE CHAPTER 105 APPLICATION LIMITS FUTURE REVISIONS TO THE CHAPTER 105 APPLICATION DUE TO MINOR FIELD ADJUSTMENTS; CONVERSELY, REVISIONS TO ACCESS ROAD DESIGN AFTER THE 102 PERMIT ISSUANCE WILL BE COORDINATED WITH PADEP/CCD.

SURVEY NOTES:

1. T.B.M. SURVEY CONTROL POINT – 962.67' LT. OF M.P. 50.70, ELEV. = 1028.99' (NAVD88).

0 50 100 150

SCALE IN FEET

LEGEND

- PROPOSED 30" CENTRAL PENN LINE NORTH
- EXISTING PIPELINES
- EXISTING TGPL R/W
- LIMITS OF DISTURBANCE
- PROPOSED CPLN R/W
- PROPERTY LINE
- FOREIGN PIPELINE
- WETLAND AREA
- STREAM FLOW
- EXISTING POWER LINE
- EXISTING FENCE
- WETLAND FLAGS
- PHOTO DATA POINT
- WETLAND DATA POINT
- UPLAND DATA POINT
- WELL POINT
- TRENCH PLUG
- WATERBODY
- TREE LINE
- FLOODWAY BOUNDARY
- FEMA FLOODWAY BOUNDARY
- SS 12" SEDIMENT BARRIER
- SS 18" SEDIMENT BARRIER
- SS 24" SEDIMENT BARRIER
- SS 32" SEDIMENT BARRIER
- TOP OF BANK
- PERMANENT STREAM IMPACT
- TEMPORARY STREAM IMPACT

WOOD GROUP USA, INC.

DRAWING NO.	REFERENCE TITLE

NO.	DATE	BY	REVISION DESCRIPTION	W.O. NO.	CHK.	APP.
0	10/06/16	LR	ISSUED FOR PADEP SUBMITTAL #2	1161481	CLR	MJH
1	04/12/17	VT	ISSUED FOR PADEP SUBMITTAL #3	1161481	CLR	MJH
2	07/28/17	THL	ISSUED FOR PADEP SUBMITTAL #4	1161481	CLR	MJH

TRANSCONTINENTAL GAS PIPE LINE COMPANY LLC
WATER OBSTRUCTION AND ENCROACHMENT PERMIT IMPACT MAPS
ATLANTIC SUNRISE PROJECT
PROPOSED 30" CENTRAL PENN LINE NORTH
STREAM CROSSING WW-T65-21001
@ M.P. 50.70
LENOX TOWNSHIP, SUSQUEHANNA COUNTY, PENNSYLVANIA

Williams

DRAWN BY: LR	DATE: 09/23/16	ISSUED FOR BID:	SCALE: 1" = 50'
CHECKED BY: CLR	DATE: 09/26/16	ISSUED FOR CONSTRUCTION:	REVISION: 2
APPROVED BY: MJH	DATE: 09/27/16	DRAWING NUMBER: 24-1601-70-09-A/AR-SU-041-01	SHEET 1 OF 1
WO: 1161481		8:04am 7/26/2017 nilu	

K:\LPI1375\Mapping\Waterbodies\PADEP_Sub. #4 07-28-17\24-1601-70-09-A_AR-SU-041-01.dwg

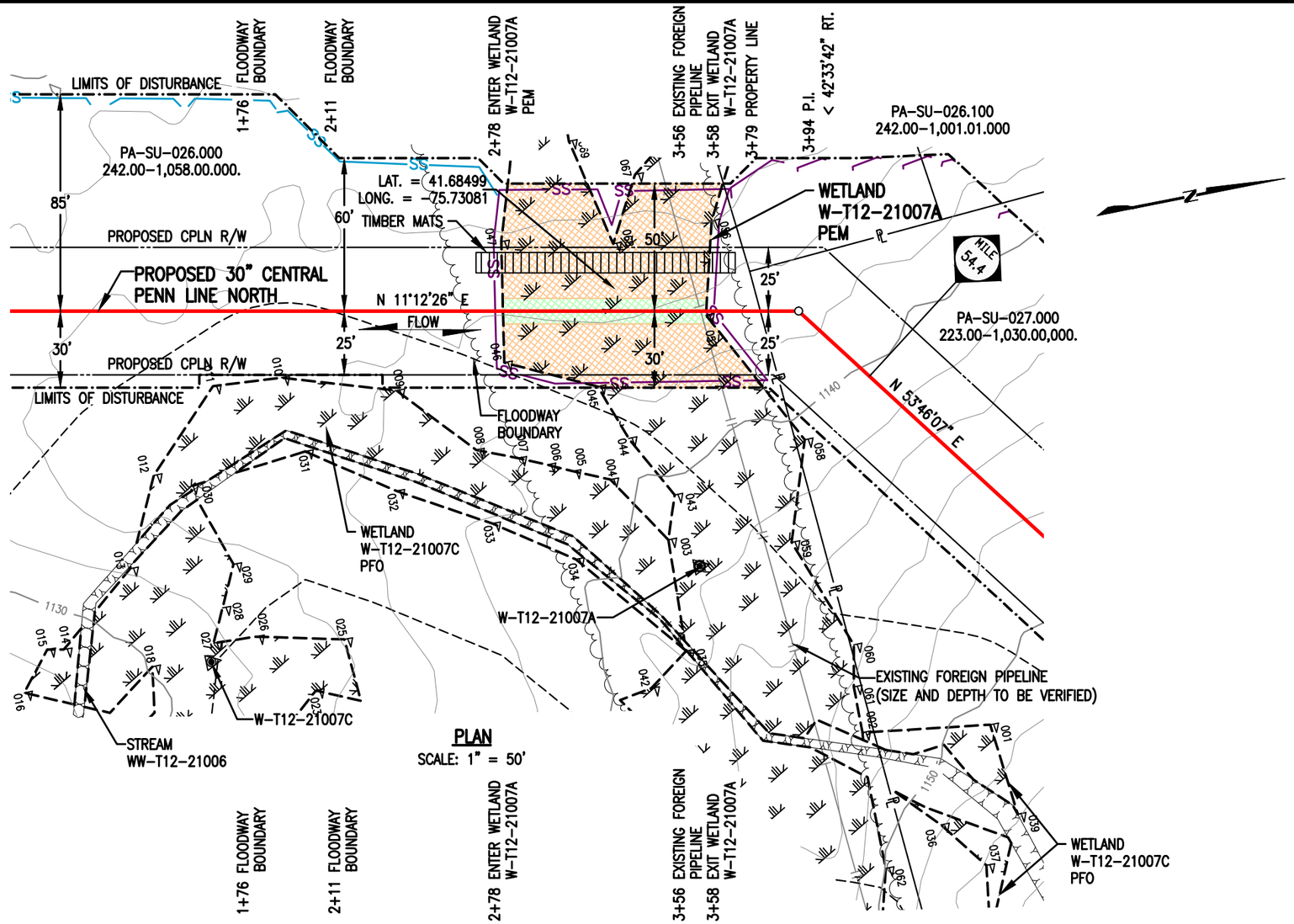

PLAN

SCALE: 1" = 50'

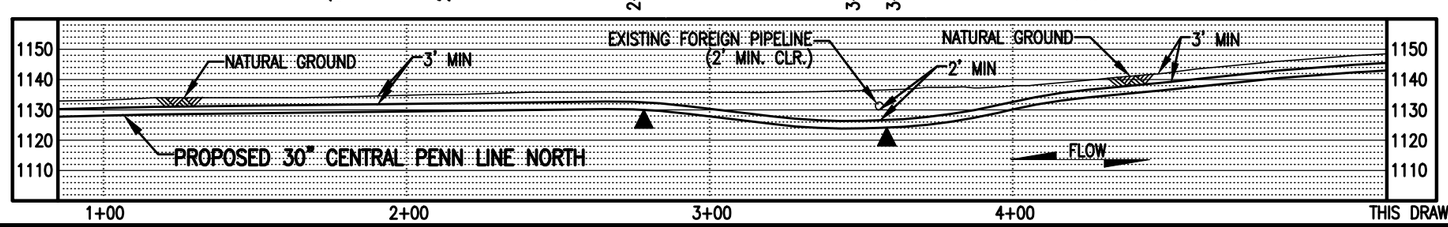

PROFILE

SCALE: 1" = 50' HORIZONTAL
1" = 50' VERTICAL

THIS DRAWING SUPERCEDES 24-1601-70-20-A/54.35-01

WETLAND DISTURBANCE:

WETLAND W-T12-21007A (EV)	ACRE
TEMPORARY DISTURBANCE	0.1281
PERMANENT DISTURBANCE	0.0184
TOTAL DISTURBANCE	0.1465

NOTES:

1. UTILIZE A WETLAND EQUIPMENT CROSSING (WEC) AND WCC.3.
2. STATION 1+00 SHOWN IS EQUAL TO STATION 2869+00 ON THE EROSION AND SEDIMENT CONTROL PLAN.

SURVEY NOTES:

1. T.B.M. IRON ROD – 15.53' LT. OF M.P. 54.39, ELEV. = 1136.87' (NAVD88).

0 50 100 150
SCALE IN FEET

LEGEND

- PROPOSED 30" CENTRAL PENN LINE NORTH
- EXISTING PIPELINES
- EXISTING TGPL R/W
- LIMITS OF DISTURBANCE
- PROPOSED CPLN R/W
- PROPERTY LINE
- FOREIGN PIPELINE
- WETLAND AREA
- EXISTING POWER LINE
- EXISTING FENCE
- WETLAND FLAGS
- PHOTO DATA POINT
- WETLAND DATA POINT
- UPLAND DATA POINT
- WELL POINT
- TRENCH PLUG
- WATERBODY
- TREE LINE
- FLOODWAY BOUNDARY
- FEMA FLOODWAY BOUNDARY
- SS 12" SEDIMENT BARRIER
- SS 18" SEDIMENT BARRIER
- SS 24" SEDIMENT BARRIER
- SS 32" SEDIMENT BARRIER
- TOP OF BANK
- PERMANENT WETLAND IMPACT
- TEMPORARY WETLAND IMPACT

WOOD GROUP USA, INC.

DRAWING NO.	REFERENCE TITLE

NO.	DATE	BY	REVISION DESCRIPTION	W.O. NO.	CHK.	APP.
0	07/31/15	TL	ISSUED FOR PADEP 105 PERMIT	1161481	CLR	MJH
1	10/06/16	MA	ISSUED FOR PADEP SUBMITTAL #2	1161481	CLR	MJH
2	04/12/17	ML	ISSUED FOR PADEP SUBMITTAL #3	1161481	CLR	MJH
3	07/28/17	THL	ISSUED FOR PADEP SUBMITTAL #4	1161481	CLR	MJH

TRANSCONTINENTAL GAS PIPE LINE COMPANY LLC
WATER OBSTRUCTION AND ENCROACHMENT PERMIT IMPACT MAPS
ATLANTIC SUNRISE PROJECT
PROPOSED 30" CENTRAL PENN LINE NORTH
WETLAND CROSSING W-T12-21007A
@ M.P. 54.38
LENOX TOWNSHIP, SUSQUEHANNA COUNTY, PENNSYLVANIA

Williams

DRAWN BY: AO	DATE: 03/06/15	ISSUED FOR BID:	SCALE: 1" = 50'
CHECKED BY: ML	DATE: 04/13/15	ISSUED FOR CONSTRUCTION:	REVISION: 3
APPROVED BY: MJH	DATE: 04/17/15	DRAWING NUMBER: 24-1601-70-20-A/54.35-02	SHEET 1 OF 1
WO: 1161481		1:35pm 7/25/2017 t3le	

K:\LP11375\Mapping\Wetlands\PADEP_Sub. #4 07-28-17\24-1601-70-20-A_54.35-02.dwg

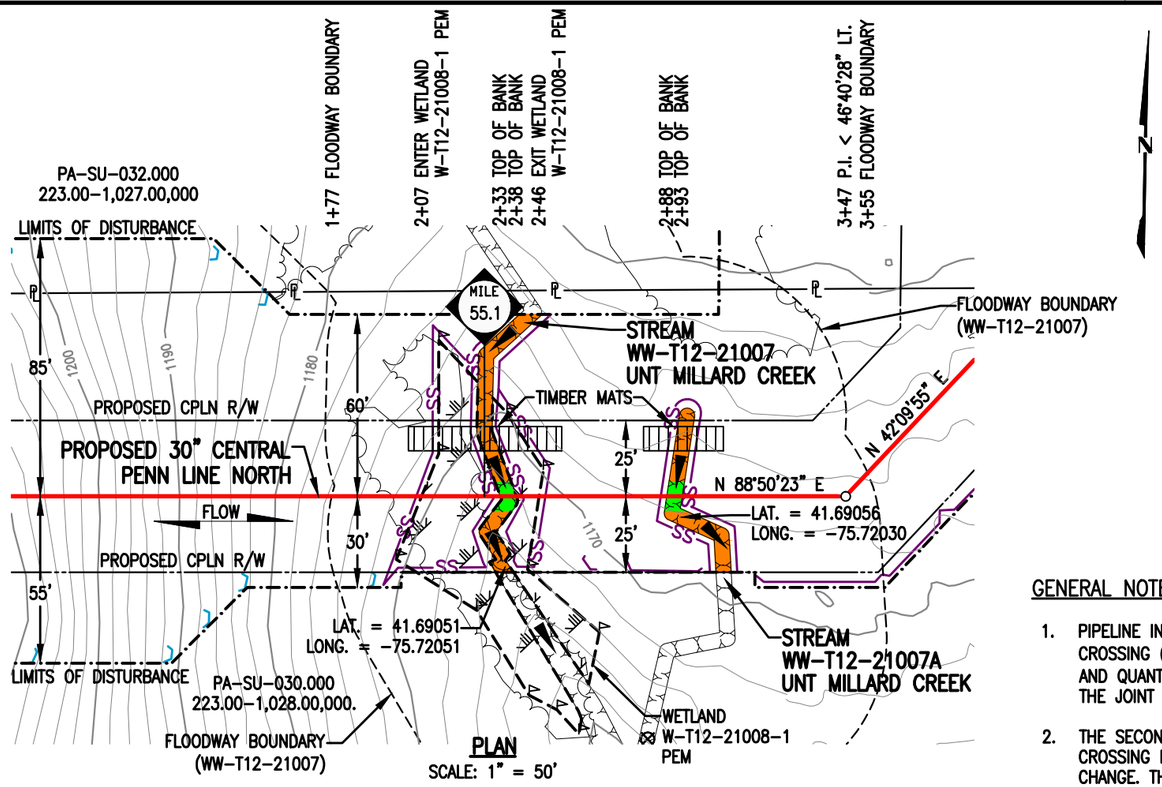

PLAN
SCALE: 1" = 50'

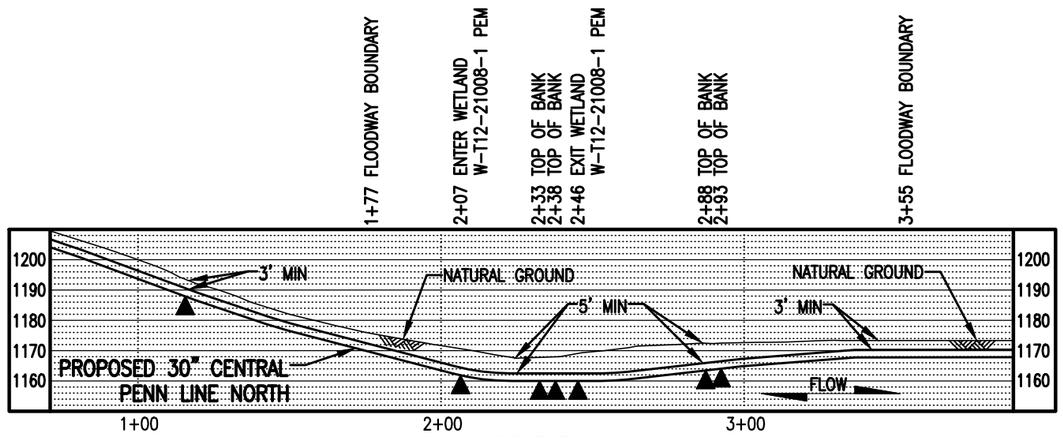

PROFILE
SCALE: 1" = 50' HORIZONTAL
1" = 50' VERTICAL

STREAM DISTURBANCE:

STREAM WW-T12-21007	ACRE
TEMPORARY STREAM DISTURBANCE	0.0098
PERMANENT STREAM DISTURBANCE	0.0013
TOTAL STREAM DISTURBANCE	0.0111
TEMPORARY FLOODWAY DISTURBANCE	0.2627
PERMANENT FLOODWAY DISTURBANCE	0.0312
TOTAL FLOODWAY DISTURBANCE	0.2939

STREAM DIMENSION	FT.
STREAM WIDTH (TOB TO TOB)	5.32
STREAM TEMPORARY IMPACT LENGTH	86.82
STREAM PERMANENT IMPACT LENGTH	11.36
STREAM TOTAL IMPACT LENGTH	98.18

STREAM CROSSING METHOD	
PRIMARY	DAM AND PUMP (DPX)
SECONDARY	DRY OPEN CUT

STREAM WW-T12-21007A	ACRE
TEMPORARY STREAM DISTURBANCE	0.0062
PERMANENT STREAM DISTURBANCE	0.0012
TOTAL STREAM DISTURBANCE	0.0074
TEMPORARY FLOODWAY DISTURBANCE	0.0000
PERMANENT FLOODWAY DISTURBANCE	0.0000
TOTAL FLOODWAY DISTURBANCE	0.0000

STREAM DIMENSION	FT.
STREAM WIDTH (TOB TO TOB)	5.04
STREAM TEMPORARY IMPACT LENGTH	52.44
STREAM PERMANENT IMPACT LENGTH	10.12
STREAM TOTAL IMPACT LENGTH	62.56

STREAM CROSSING METHOD	
PRIMARY	DAM AND PUMP (DPX)
SECONDARY	DRY OPEN CUT

GENERAL NOTES:

1. PIPELINE INSTALLATION WILL BE COMPLETED UTILIZING THE PRIMARY CROSSING METHOD REFERENCED ABOVE; EQUIPMENT TO CROSS STREAM USING A BRIDGE EQUIPMENT CROSSING (BEC). ALL TYPICALS FOR THE CROSSING METHODS AND BMPS REFERENCED WITHIN THIS PACKAGE ARE INCLUDED WITHIN THE "BEST MANAGEMENT PRACTICES AND QUANTITIES PLAN SET" (BMP PLAN SET), WHICH IS INCLUDED AT THE BACK OF THIS PACKAGE. THE BMP PLAN SET IS ALSO INCLUDED WITHIN ATTACHMENT M OF THE JOINT PERMIT APPLICATION, ALONG WITH THE EROSION AND SEDIMENT CONTROL PLANS AND NARRATIVES.
2. THE SECONDARY DRY OPEN CUT METHOD WILL BE IMPLEMENTED IF THE STREAM IS LOW FLOW OR DRY AT THE TIME OF THE CROSSING SUCH THAT THE PRIMARY CROSSING IS NOT PRACTICABLE. IN THIS EVENT, THE PRIMARY EQUIPMENT WILL BE PRESENT ON SITE FOR USE AS NEEDED SHOULD STREAM FLOW CONDITIONS CHANGE. THE SECONDARY CROSSING METHOD WOULD UTILIZE THE SAME WORKSPACE AS THE PROPOSED PRIMARY CROSSING METHOD. THEREFORE, STREAM DISTURBANCE ACREAGE WOULD BE THE SAME FOR EITHER CROSSING METHOD.
3. WATERBODIES WITHOUT A FEMA-ESTABLISHED FLOODPLAIN, THE FLOODWAY IS COINCIDENT WITH A 50-FOOT OFFSET MEASURED LATERALLY FROM THE PHYSICAL TOP OF BANK OF THE WATERBODY.
4. THE 50-FOOT WIDE FLOODWAYS OF STREAMS WW-T12-21007 AND WW-T12-21007A OVERLAP AND HAVE BEEN MERGED TOGETHER TO SHOW A SINGLE FLOODWAY.
5. FLOODWAY IMPACTS FOR WW-T12-21007A ARE INCLUDED IN THE FLOODWAY IMPACT CALCULATIONS FOR STREAM WW-T12-21007.
6. TRANSCO WILL REPLANT THE RIPARIAN FOREST BUFFER OF STREAMS WW-T12-21007 AND WW-T12-21007A WITHIN THE LIMITS OF THE MAPPED FLOODWAY BOUNDARY.
7. THE CALCULATION OF FILL VOLUMES PROVIDED WITHIN THE CHAPTER 105 APPLICATION IS BASED ON THE EXTENT OF THE ACCESS ROAD LOD WITHIN THE FLOODPLAIN/FLOODWAY TO ACCOUNT FOR WORST-CASE FIELD SCENARIOS REQUIRING THE ADDITION OF A ONE FOOT-DEPTH OF GRAVEL FOR MAINTENANCE AND/OR MINOR ACCESS ROAD WIDENING FOR IMPROVED ACCESS. AS SUCH, THE FILL VOLUME IS AN OVERESTIMATION AND DOES NOT REFLECT THE ACTUAL VOLUME OF FILL REQUIRED BY THE CURRENT ACCESS ROAD DESIGN, AS PRESENTED WITHIN THE CHAPTER 102 PERMIT. THE INCLUSION OF THE OVERESTIMATED FILL VOLUMES WITHIN THE CHAPTER 105 APPLICATION LIMITS FUTURE REVISIONS TO THE CHAPTER 105 APPLICATION DUE TO MINOR FIELD ADJUSTMENTS; CONVERSELY, REVISIONS TO ACCESS ROAD DESIGN AFTER THE 102 PERMIT ISSUANCE WILL BE COORDINATED WITH PADEP/CCD.
8. STATION 1+00 SHOWN IS EQUAL TO STATION 2908+00 ON THE EROSION AND SEDIMENT CONTROL PLAN.

SURVEY NOTES:

1. T.B.M. SURVEY CONTROL POINT – 16' RT. OF M.P. 55.09, ELEV. = 1169.26' (NAVD88).

0 50 100 150
SCALE IN FEET

THIS DRAWING SUPERCEDES 24-1601-70-09-A/55.10-01

LEGEND

- PROPOSED 30" CENTRAL PENN LINE NORTH
- EXISTING PIPELINES
- EXISTING TGPL R/W
- LIMITS OF DISTURBANCE
- PROPOSED CPLN R/W
- PROPERTY LINE
- FOREIGN PIPELINE
- WETLAND AREA
- STREAM FLOW
- EXISTING POWER LINE
- EXISTING FENCE
- WETLAND FLAGS
- PHOTO DATA POINT
- WETLAND DATA POINT
- UPLAND DATA POINT
- WELL POINT
- TRENCH PLUG
- WATERBODY
- TREE LINE
- FLOODWAY BOUNDARY
- FEMA FLOODWAY BOUNDARY
- SS 12" SEDIMENT BARRIER
- SS 18" SEDIMENT BARRIER
- SS 24" SEDIMENT BARRIER
- SS 32" SEDIMENT BARRIER
- TOP OF BANK
- PERMANENT STREAM IMPACT
- TEMPORARY STREAM IMPACT

WOOD GROUP USA, INC.

DRAWING NO.	REFERENCE TITLE

NO.	DATE	BY	REVISION DESCRIPTION	W.O. NO.	CHK.	APP.
1	02/03/16	TL	ISSUED FOR INTERNAL USE	1161481	CLR	MJH
2	10/06/16	MGJ	ISSUED FOR PADEP SUBMITTAL #2	1161481	CLR	MJH
3	04/12/17	MF	ISSUED FOR PADEP SUBMITTAL #3	1161481	CLR	MJH
4	07/28/17	THL	ISSUED FOR PADEP SUBMITTAL #4	1161481	CLR	MJH

TRANSCONTINENTAL GAS PIPE LINE COMPANY LLC
WATER OBSTRUCTION AND ENCROACHMENT PERMIT IMPACT MAPS
ATLANTIC SUNRISE PROJECT
PROPOSED 30" CENTRAL PENN LINE NORTH
STREAM CROSSINGS WW-T12-21007 @ M.P. 55.10 &
WW-T12-21007A @ M.P. 55.11
LENOX TOWNSHIP, SUSQUEHANNA COUNTY, PENNSYLVANIA

Williams

DRAWN BY: LL	DATE: 01/02/15	ISSUED FOR BID:	SCALE: 1" = 50'
CHECKED BY: ML	DATE: 03/07/15	ISSUED FOR CONSTRUCTION:	REVISION: 4
APPROVED BY: MJH	DATE: 04/17/15	DRAWING NUMBER: 24-1601-70-09-A/55.10-02	SHEET 1 OF 1
WO: 1161481		10:24am 7/26/2017 nilu	

K:\LPI1375\Mapping\Waterbodies\PADEP_Sub. #4 07-28-17\24-1601-70-09-A_55.10-02.dwg

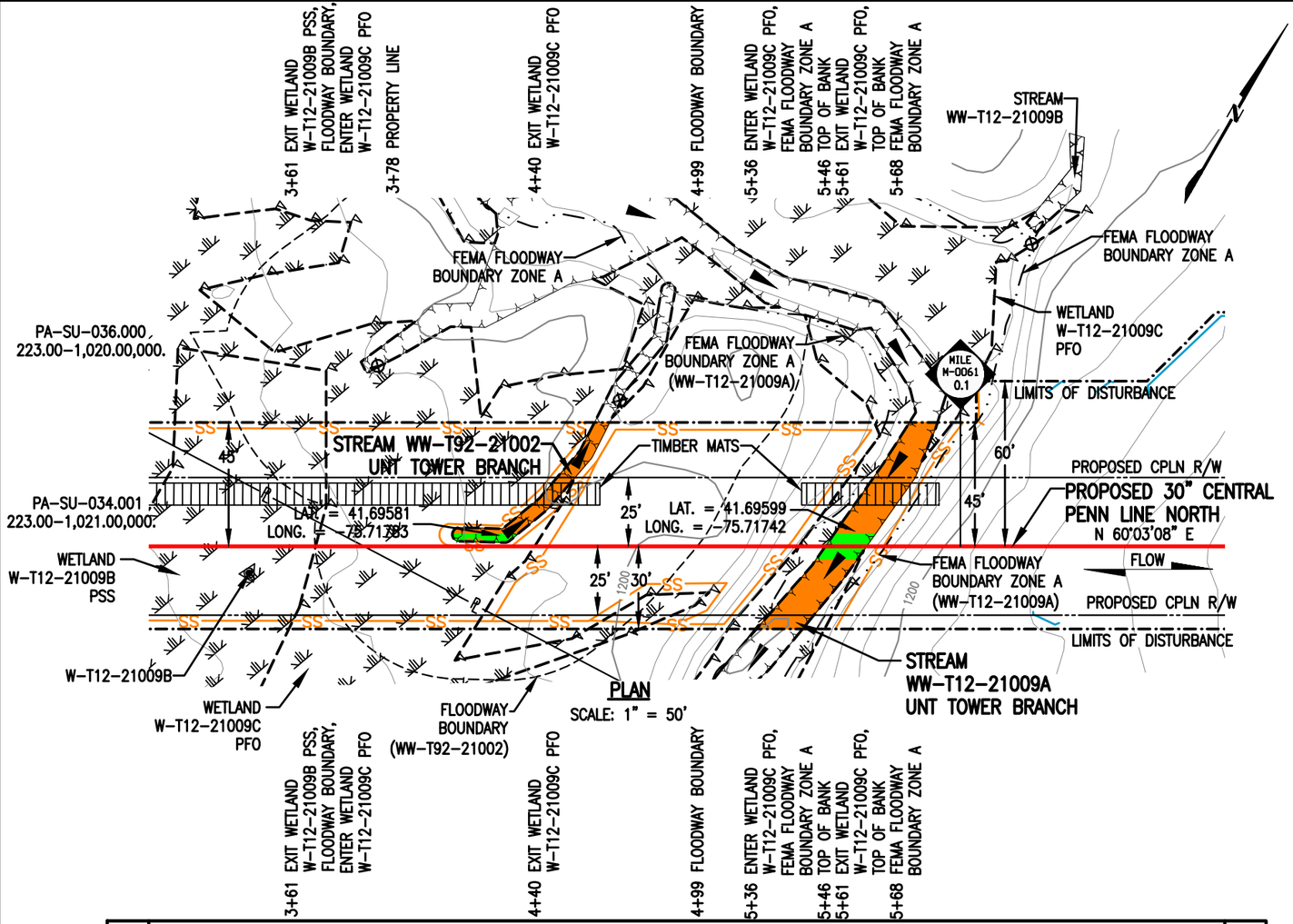

PLAN

SCALE: 1" = 50'

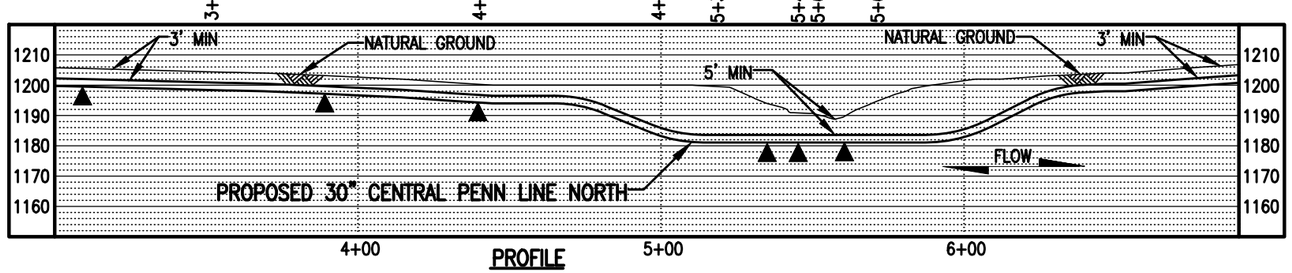

PROFILE

SCALE: 1" = 50' HORIZONTAL
1" = 50' VERTICAL

ALL TABLES:
SEE SHEET 2 OF 2

GENERAL NOTES:

1. PIPELINE INSTALLATION WILL BE COMPLETED UTILIZING THE PRIMARY CROSSING METHOD REFERENCED ABOVE; EQUIPMENT TO CROSS STREAM USING A BRIDGE EQUIPMENT CROSSING (BEC). ALL TYPICALS FOR THE CROSSING METHODS AND BMPS REFERENCED WITHIN THIS PACKAGE ARE INCLUDED WITHIN THE "BEST MANAGEMENT PRACTICES AND QUANTITIES PLAN SET" (BMP PLAN SET), WHICH IS INCLUDED AT THE BACK OF THIS PACKAGE. THE BMP PLAN SET IS ALSO INCLUDED WITHIN ATTACHMENT M OF THE JOINT PERMIT APPLICATION, ALONG WITH THE EROSION AND SEDIMENT CONTROL PLANS AND NARRATIVES.

2. (WW-T12-21009A) THE SECONDARY CROSSING METHOD WOULD UTILIZE THE SAME WORKSPACE AS THE PROPOSED PRIMARY CROSSING METHOD. THEREFORE, STREAM DISTURBANCE ACREAGE WOULD BE THE SAME FOR EITHER CROSSING METHOD.

3. THIS SITE IS LOCATED WITHIN THE 100 YEAR FLOOD PLAIN PER FEMA FLOOD MAP DATA. THE FEMA FLOODWAY BOUNDARY COVERS STREAM WW-T12-21009A.

4. STREAM WW-T92-21002 IS LOCATED OUTSIDE OF THE FEMA FLOODWAY. THE MAPPED FLOODWAY FOR THIS STREAM IS COINCIDENT WITH A 50-FOOT OFFSET MEASURED LATERALLY FROM THE PHYSICAL TOP OF BANK OF THE STREAM.

5. TRANSCO WILL REPLANT THE RIPARIAN FOREST BUFFER OF STREAMS WW-T92-21002 AND WW-T12-21009A BEYOND THE FEMA FLOODWAY BOUNDARY, WITHIN A 50-FOOT BUFFER FROM THE TOP OF BANKS.

6. THE CALCULATION OF FILL VOLUMES PROVIDED WITHIN THE CHAPTER 105 APPLICATION IS BASED ON THE EXTENT OF THE ACCESS ROAD LOD WITHIN THE FLOODPLAIN/FLOODWAY TO ACCOUNT FOR WORST-CASE FIELD SCENARIOS REQUIRING THE ADDITION OF A ONE FOOT-DEPTH OF GRAVEL FOR MAINTENANCE AND/OR MINOR ACCESS ROAD WIDENING FOR IMPROVED ACCESS. AS SUCH, THE FILL VOLUME IS AN OVERESTIMATION AND DOES NOT REFLECT THE ACTUAL VOLUME OF FILL REQUIRED BY THE CURRENT ACCESS ROAD DESIGN, AS PRESENTED WITHIN THE CHAPTER 102 PERMIT. THE INCLUSION OF THE OVERESTIMATED FILL VOLUMES WITHIN THE CHAPTER 105 APPLICATION LIMITS FUTURE REVISIONS TO THE CHAPTER 105 APPLICATION DUE TO MINOR FIELD ADJUSTMENTS; CONVERSELY, REVISIONS TO ACCESS ROAD DESIGN AFTER THE 102 PERMIT ISSUANCE WILL BE COORDINATED WITH PADEP/CCD.

7. STATION 5+00 SHOWN IS EQUAL TO M-0061 STATION 4+33 ON THE EROSION AND SEDIMENT CONTROL PLAN.

SURVEY NOTES:

1. T.B.M. SURVEY CONTROL POINT – 14' LT. OF M-0061 M.P. 0.06, ELEV. = 1204.31' (NAVD88).

0 50 100 150
SCALE IN FEET

THIS DRAWING SUPERCEDES 24-1601-70-09-A/M-0061-0.09-01

LEGEND

- PROPOSED 30" CENTRAL PENN LINE NORTH
- EXISTING PIPELINES
- EXISTING TGPL R/W
- LIMITS OF DISTURBANCE
- PROPOSED CPLN R/W
- PROPERTY LINE
- FOREIGN PIPELINE
- WETLAND AREA
- STREAM FLOW
- EXISTING POWER LINE
- EXISTING FENCE
- WETLAND FLAGS
- PHOTO DATA POINT
- WETLAND DATA POINT
- UPLAND DATA POINT
- WELL POINT
- TRENCH PLUG
- WATERBODY
- TREE LINE
- FLOODWAY BOUNDARY
- FEMA FLOODWAY BOUNDARY
- 12" SEDIMENT BARRIER
- 18" SEDIMENT BARRIER
- 24" SEDIMENT BARRIER
- 32" SEDIMENT BARRIER
- TOP OF BANK
- PERMANENT STREAM IMPACT
- TEMPORARY STREAM IMPACT

WOOD GROUP USA, INC.

DRAWING NO.	REFERENCE TITLE

NO.	DATE	BY	REVISION DESCRIPTION	W.O. NO.	CHK.	APP.
1	02/03/16	TL	ISSUED FOR INTERNAL USE	1161481	CLR	MJH
2	10/06/16	KB	ISSUED FOR PADEP SUBMITTAL #2	1161481	CLR	MJH
3	04/12/17	MF	ISSUED FOR PADEP SUBMITTAL #3	1161481	CLR	MJH
4	07/28/17	THL	ISSUED FOR PADEP SUBMITTAL #4	1161481	CLR	MJH

TRANSCONTINENTAL GAS PIPE LINE COMPANY LLC
WATER OBSTRUCTION AND ENCROACHMENT PERMIT IMPACT MAPS
ATLANTIC SUNRISE PROJECT
PROPOSED 30" CENTRAL PENN LINE NORTH
STREAM CROSSINGS WW-T92-21002 @ M-0061 M.P. 0.07
& WW-T12-21009A @ M-0061 M.P. 0.09
LENOX TOWNSHIP, SUSQUEHANNA COUNTY, PENNSYLVANIA

Williams

DRAWN BY: PGM	DATE: 03/06/15	ISSUED FOR BID:	SCALE: 1" = 50'
CHECKED BY: ML	DATE: 04/13/15	ISSUED FOR CONSTRUCTION:	REVISION: 4
APPROVED BY: MJH	DATE: 04/07/15	DRAWING NUMBER: 24-1601-70-09-A/M-0061-0.09-02	SHEET 1 OF 2
WO: 1161481		8:58am 7/26/2017 nlu	

K:\LPI1375\Mapping\Waterbodies\PADEP_Sub. #4 07-28-17\24-1601-70-09-A_M-0061-0.09-02.dwg

STREAMS DISTURBANCE:

STREAM WW-T92-21002	ACRE
TEMPORARY STREAM DISTURBANCE	0.0067
PERMANENT STREAM DISTURBANCE	0.0017
TOTAL STREAM DISTURBANCE	0.0084
TEMPORARY FLOODWAY DISTURBANCE	0.0847
PERMANENT FLOODWAY DISTURBANCE	0.0135
TOTAL FLOODWAY DISTURBANCE	0.0982

STREAM WW-T12-21009A	ACRE
TEMPORARY STREAM DISTURBANCE	0.0219
PERMANENT STREAM DISTURBANCE	0.0034
TOTAL STREAM DISTURBANCE	0.0253
TEMPORARY FLOODWAY DISTURBANCE	0.0079
PERMANENT FLOODWAY DISTURBANCE	0.0015
TOTAL FLOODWAY DISTURBANCE	0.0094

STREAM DIMENSION	FT.
STREAM WIDTH (TOB TO TOB)	15.27
STREAM TEMPORARY IMPACT LENGTH	53.01
STREAM PERMANENT IMPACT LENGTH	18.46
STREAM TOTAL IMPACT LENGTH	71.46

STREAM DIMENSION	FT.
STREAM WIDTH (TOB TO TOB)	15.00
STREAM TEMPORARY IMPACT LENGTH	74.70
STREAM PERMANENT IMPACT LENGTH	11.50
STREAM TOTAL IMPACT LENGTH	86.20

STREAM CROSSING METHOD	
PRIMARY	DAM AND PUMP (DPX)
SECONDARY	DRY OPEN CUT

STREAM CROSSING METHOD	
PRIMARY	DAM AND PUMP (DPX)
SECONDARY	COFFER DAM (CD)

LEGEND

- PROPOSED 30" CENTRAL PENN LINE NORTH
- EXISTING PIPELINES
- EXISTING TGPL R/W
- LIMITS OF DISTURBANCE
- PROPOSED CPLN R/W
- PROPERTY LINE
- FOREIGN PIPELINE
- WETLAND AREA
- STREAM FLOW
- EXISTING POWER LINE
- EXISTING FENCE
- WETLAND FLAGS
- PHOTO DATA POINT
- WETLAND DATA POINT
- UPLAND DATA POINT
- WELL POINT
- TRENCH PLUG
- WATERBODY
- TREE LINE
- FLOODWAY BOUNDARY
- FEMA FLOODWAY BOUNDARY
- SS 12" SEDIMENT BARRIER
- SS 18" SEDIMENT BARRIER
- SS 24" SEDIMENT BARRIER
- SS 32" SEDIMENT BARRIER
- TOP OF BANK
- PERMANENT STREAM IMPACT
- TEMPORARY STREAM IMPACT

WOOD GROUP USA, INC.

DRAWING NO.	REFERENCE TITLE

NO.	DATE	BY	REVISION DESCRIPTION	W.O. NO.	CHK.	APP.
0	07/28/17	LL	ISSUED FOR PADEP SUBMITTAL #4	1161481	CLR	MJH

TRANSCONTINENTAL GAS PIPE LINE COMPANY LLC
WATER OBSTRUCTION AND ENCROACHMENT PERMIT IMPACT MAPS
ATLANTIC SUNRISE PROJECT
PROPOSED 30" CENTRAL PENN LINE NORTH
STREAM CROSSINGS WW-T92-21002 @ M-0061 M.P. 0.07
& WW-T12-21009A @ M-0061 M.P. 0.09
LENOX TOWNSHIP, SUSQUEHANNA COUNTY, PENNSYLVANIA

Williams

DRAWN BY: LL	DATE: 07/26/17	ISSUED FOR BID:	SCALE: N.T.S.
CHECKED BY: AT	DATE: 07/26/17	ISSUED FOR CONSTRUCTION:	REVISION: 0
APPROVED BY: MJH	DATE: 07/26/17	DRAWING NUMBER: 24-1601-70-09-A/M-0061-0.09-02	SHEET 2 OF 2
WO: 1161481		12:59pm 7/26/2017 nltu	

K:\LP11375\Mapping\Waterbodies\PADEP_Sub. #4 07-28-17\24-1601-70-09-A_M-0061-0.09-02.dwg

TRANSCONTINENTAL GAS PIPE LINE COMPANY LLC
ATLANTIC SUNRISE PROJECT
PROPOSED 30" CENTRAL PENN LINE NORTH

BEST MANAGEMENT PRACTICES AND QUANTITIES PLAN SET

LENOX TOWNSHIP

SUSQUEHANNA COUNTY

BMP DETAIL SUMMARY

FIGURE	FIGURE TITLE	SHEET NO.
ARF	ABACT ROCK FILTER	1
BBD	BROAD-BASED DIP	
BEC	BRIDGE EQUIPMENT CROSSING	
CD	COFFERDAM STREAM CROSSING	
~~CDM~~	~~CHECK DAM~~	
CFS	COMPOST FILTER SOCK	2
~~CS~~	~~CLEANOUT STAKE~~	
~~CST~~	~~COMPOST SOCK SEDIMENT TRAP~~	
CWC	CLEAN WATER CROSSING	
DPX	DAM AND PUMP STREAM CROSSING	3
DS	HYDROSTATIC DEWATERING STRUCTURE	
ECB	EROSION CONTROL BLANKET	
FD	FILTER SOCK DIVERSION	
FEN	CONSTRUCTION FENCE	
FX	FLUME STREAM CROSSING	4
HDD	HORIZONTAL DIRECTIONAL DRILL	
~~IPF~~	~~FILTER BAG INLET PROTECTION - TYPE M~~	
~~IPS~~	~~STONE AND CONCRETE INLET PROTECTION - TYPE M~~	
MAT.1	TIMBER MATTING CONSTRUCTION	5
MAT.2	TIMBER MATTING WITH FILL OVER EXISTING PIPELINES	
MAT.3	TIMBER MATTING AIR BRIDGE	
PWB	PUMP WATER FILTER BAG	
RAO	RIP RAP APRON AT PIPE OUTLET WITHOUT FLARED END SECTION	
RAP	RIP RAP GRADATION	6
RCE	ROCK CONSTRUCTION ENTRANCE	
RCW	ROCK CONSTRUCTION ENTRANCE WITH WASH RACK	
RFO	ROCK FILTER OUTLET	
RSF	REINFORCED SILT FENCE (30" HIGH)	
RSS	RIP RAP STREAM BANK STABILIZATION	7
RX.1	TRENCHED ROAD CROSSING	
RX.2	BORED ROAD/RAILROAD CROSSING	
SBR	STREAM BANK STABILIZATION WITH REINFORCEMENT BLANKET	
SF	STANDARD SILT FENCE (18" HIGH)	8
SSF	SUPER SILT FENCE (33" HIGH)	
TD	TRENCH DEWATERING	
TP	TRENCH PLUG INSTALLATION	
~~TRV~~	~~TRASH RACK AND ANTI VORTEX DEVICE~~	
TS.1	TOPSOIL SEGREGATION (1)	9
TS.2	TOPSOIL SEGREGATION (2)	
TS.3	TOPSOIL SEGREGATION (3)	
TTS	SIDE SLOPE (TWO-TONE) CONSTRUCTION PROCEDURE	
VCH	VEGETATED CHANNEL	10
WB	WATERBAR	
WB.1	WATERBAR LAYOUT DETAIL	
WB.2	COMPOST FILTER SOCK AND SUMP (PADEP APPROVED ALTERNATE DETAIL) AT WATERBAR DISCHARGE	
WBX.1	BORED WATERBODY CROSSING	
WCC.1	WETLAND INSTALLATION PROCEDURE	11
WCC.3	"INUNDATED WETLAND" INSTALLATION PROCEDURE	
~~WD~~	~~WATER DEFLECTOR~~	
WEC	WETLAND EQUIPMENT CROSSING	

DETAILS THAT ARE NOT UTILIZED IN THIS COUNTY ARE STRUCK THROUGH IN THIS TABLE. THESE DETAILS ARE ALSO CROSSED OUT WITH A NOTE THAT READS "DETAILS ARE NOT UTILIZED IN THIS COUNTY" ON THEIR RESPECTIVE SHEET.

DRAWING INDEX

DRAWING NUMBER	SHEET NO.	DRAWING NAME
24-1601-70-28-A/1683_3-BMP	1-1	COVER SHEET
ASR-BMP-GN	1-3	GENERAL NOTES
ASR-BMP	1-11	BEST MANAGEMENT PRACTICES STANDARD CONSTRUCTION DETAILS
24-1600-70-28-A/1683_3-BMP-SU-TB	1-3	QUANTITY, CROSSING, AND ACIDIC SOIL TABLES

E&S DETAIL GROUP LEGEND FOR PIPELINE CROSSINGS

TYPICAL WATERSHED

WETLANDS: W = (MAT.1) (WCC.1) (WCC.3) (WEC) (PWB)

WATERBODIES: S = (BEC) (CD) (DPX) (FX) (HDD) (RSS) (SBR) (WBX.1) (PWB)

WETLAND/WATERBODIES: WS = (BEC) (CD) (DPX) (FX) (HDD) (MAT.1) (RSS) (WBX.1) (PWB) (WCC.1) (WCC.3) (WEC) (SBR)

RAILROADS: RR = (RCE) (PWB) (RX.2)

GENERAL E&S FIGURES: (CFS) (CWC) (DS) (ECB) (FD) (IPF) (MAT.1) (MAT.2) (MAT.3) (PWB) (RAF) (RAO) (RFO) (SF) (SSF) (TD) (TP) (TS.1) (TS.2) (TS.3) (TTS) (VCH) (WB) (WB.1) (PWB) (RSF)

ROADS: R1 = (RCE) (RX.1) (PWB); R2 = (RCE) (RX.2) (PWB)

SPECIAL PROTECTION WATERSHED

WETLANDS: SP = (MAT.1) (WCC.1) W (WCC.3) (WEC) (PWB)

WATERBODIES: SP = (BEC) (CD) (DPX) (FX) S (HDD) (RSS) (SBR) (WBX.1) (PWB)

WETLAND/WATERBODIES: SP = (BEC) (CD) (DPX) (FX) (HDD) WS (MAT.1) (RSS) (SBR) (WBX.1) (WCC.1) (WCC.3) (WEC) (PWB)

RAILROADS: SP = (RCW) (RX.2) RR (PWB)

SPECIAL PROTECTION WATERSHED GENERAL E&S FIGURES: (CFS) (CWC) (DS) (ECB) (FD) (IPS) (MAT.1) (MAT.2) (MAT.3) (PWB) (RAF) (RAO) (TD) (TP) (TS.1) (TS.2) (TS.3) (TTS) (VCH) (WB) (WB.2) (PWB) (RFO)

ROADS: SP = (RCW) (RX.1) R1 (PWB); SP = (RCW) (RX.2) R2 (PWB)

DETAILS IN THIS LEGEND ARE NOT COMPREHENSIVE AND ONLY REFER TO BMPS RELATED TO PIPELINE CROSSINGS. ADDITIONAL BMPS ARE PROVIDED FOR ACCESS ROADS.

E&S DETAIL GROUP LEGEND IS ALSO PROVIDED ON THE PIPELINE E&S PLANS. LEGEND IS SHOWN HERE FOR COORDINATION PURPOSES.

COMMONWEALTH OF PENNSYLVANIA REGISTERED PROFESSIONAL Engineer SUZANNE MARIE KING PE082757

SUZANNE KING REG NO. PE 082757

BL Companies ARCHITECTURE ENGINEERING ENVIRONMENTAL LAND SURVEYING

REVISIONS

NO.	DATE	BY	DESCRIPTION	W.O. NO.	CHK.	APP.
0	08/28/2015	BL	ISSUED FOR PADEP SUBMITTAL	WO572385	JLK	SMK
1	12/02/2015	BL	ISSUED FOR PADEP RESUBMITTAL	WO572385	JLK	SMK
2	Oct. 2016	BL	PADEP TECHNICAL DEFICIENCY RESPONSE #1	WO572385	JLK	AJB
3	April 2017	BL	PADEP TECHNICAL DEFICIENCY RESPONSE #2	WO572385	JLK	AJB

TRANSCONTINENTAL GAS PIPE LINE COMPANY, LLC

ATLANTIC SUNRISE PROJECT

PROPOSED 30"" CENTRAL PENN LINE NORTH

PENNSYLVANIA BEST MANAGEMENT PRACTICES AND QUANTITIES PLAN SET

SUSQUEHANNA COUNTY, PENNSYLVANIA

Williams GAS PIPELINE

COVER SHEET

DRAWN BY:	ELZ	DATE:	05/15/15	ISSUED FOR BID:	SCALE:
CHECKED BY:	JLK	DATE:	07/02/15	ISSUED FOR CONSTRUCTION:	REVISION: 3
APPROVED BY:	SMK	DATE:	07/08/15	DRAWING NUMBER: 24-1601-70-28-A/1683_3-BMP	SHEET 1 OF 1
WO:					

Drawn By & Date/Time: CSconzello Jul 27, 2017 - 3:56pm
Drawing Location & Name: G:\JOBS14A\14C\14C4909\DWG\BMPs&DETAILS\PL_DN14C4909(01)_CV-01.dwg

STANDARD EROSION & SEDIMENTATION CONTROL PLAN NOTES

1. ALL EARTH DISTURBANCES, INCLUDING CLEARING AND GRUBBING AS WELL AS CUTS AND FILLS SHALL BE DONE IN ACCORDANCE WITH THE APPROVED E&S PLAN. A COPY OF THE APPROVED DRAWINGS (STAMPED, SIGNED AND DATED BY THE REVIEWING AGENCY) MUST BE AVAILABLE AT THE PROJECT SITE AT ALL TIMES. THE REVIEWING AGENCY SHALL BE NOTIFIED OF ANY CHANGES TO THE APPROVED PLAN PRIOR TO IMPLEMENTATION OF THOSE CHANGES. THE REVIEWING AGENCY MAY REQUIRE A WRITTEN SUBMITTAL OF THOSE CHANGES FOR REVIEW AND APPROVAL AT ITS DISCRETION.
2. AT LEAST 7 DAYS PRIOR TO STARTING ANY EARTH DISTURBANCE ACTIVITIES, INCLUDING CLEARING AND GRUBBING, THE OWNER AND/OR OPERATOR SHALL INVITE ALL CONTRACTORS, THE LANDOWNER, APPROPRIATE MUNICIPAL OFFICIALS, THE E&S PLAN PREPARER, THE PCSM PLAN PREPARER, THE LICENSED PROFESSIONAL RESPONSIBLE FOR OVERSIGHT OF CRITICAL STAGES OF IMPLEMENTATION OF THE PCSM PLAN, AND A REPRESENTATIVE FROM THE LOCAL CONSERVATION DISTRICT TO AN ON-SITE PRECONSTRUCTION MEETING.
3. AT LEAST 3 DAYS PRIOR TO STARTING ANY EARTH DISTURBANCE ACTIVITIES, OR EXPANDING INTO AN AREA PREVIOUSLY UNMARKED, THE PENNSYLVANIA ONE CALL SYSTEM INC. SHALL BE NOTIFIED AT 1-800-242-1776 FOR THE LOCATION OF EXISTING UNDERGROUND UTILITIES.
4. ALL EARTH DISTURBANCE ACTIVITIES SHALL PROCEED IN ACCORDANCE WITH THE SEQUENCE PROVIDED ON THE PLAN DRAWINGS. DEVIATION FROM THAT SEQUENCE MUST BE APPROVED IN WRITING FROM THE LOCAL CONSERVATION DISTRICT OR BY THE DEPARTMENT PRIOR TO IMPLEMENTATION.
5. AREAS TO BE FILLED ARE TO BE CLEARED, GRUBBED, AND STRIPPED OF TOPSOIL TO REMOVE TREES, VEGETATION, ROOTS AND OTHER OBJECTIONABLE MATERIAL.
6. CLEARING, GRUBBING, AND TOPSOIL STRIPPING SHALL BE LIMITED TO THOSE AREAS DESCRIBED IN EACH STAGE OF THE CONSTRUCTION SEQUENCE. GENERAL SITE CLEARING, GRUBBING AND TOPSOIL STRIPPING MAY NOT COMMENCE IN ANY STAGE OR PHASE OF THE PROJECT UNTIL THE E&S BMPS SPECIFIED BY THE BMP SEQUENCE FOR THAT STAGE OR PHASE HAVE BEEN INSTALLED AND ARE FUNCTIONING AS DESCRIBED IN THIS E&S PLAN.
7. AT NO TIME SHALL CONSTRUCTION VEHICLES BE ALLOWED TO ENTER AREAS OUTSIDE THE LIMIT OF DISTURBANCE BOUNDARIES SHOWN ON THE PLAN MAPS. THESE AREAS MUST BE CLEARLY MARKED AND FENCED OFF BEFORE CLEARING AND GRUBBING OPERATIONS BEGIN.
8. TOPSOIL REQUIRED FOR THE ESTABLISHMENT OF VEGETATION SHALL BE STOCKPILED AT THE LOCATION(S) SHOWN ON THE PLAN MAPS(S) IN THE AMOUNT NECESSARY TO COMPLETE THE FINISH GRADING OF ALL EXPOSED AREAS THAT ARE TO BE STABILIZED BY VEGETATION. EACH STOCKPILE SHALL BE PROTECTED IN THE MANNER SHOWN ON THE PLAN DRAWINGS. STOCKPILE HEIGHTS SHALL NOT EXCEED 35 FEET. STOCKPILE SLOPES SHALL BE 2H:1V OR FLATTER.
9. IMMEDIATELY UPON DISCOVERING UNFORESEEN CIRCUMSTANCES POSING THE POTENTIAL FOR ACCELERATED EROSION AND/OR SEDIMENT POLLUTION, THE OPERATOR SHALL IMPLEMENT APPROPRIATE BEST MANAGEMENT PRACTICES TO MINIMIZE THE POTENTIAL FOR EROSION AND SEDIMENT POLLUTION AND NOTIFY THE LOCAL CONSERVATION DISTRICT AND/OR THE REGIONAL OFFICE OF THE DEPARTMENT.
10. ALL BUILDING MATERIALS AND WASTES SHALL BE REMOVED FROM THE SITE AND RECYCLED OR DISPOSED OF IN ACCORDANCE WITH THE DEPARTMENT'S SOLID WASTE MANAGEMENT REGULATIONS AT 25 PA. CODE 260.1 ET SEQ., 271.1, AND 287.1 ET. SEQ. NO BUILDING MATERIALS OR WASTES OR UNUSED BUILDING MATERIALS SHALL BE BURNED, BURIED, DUMPED, OR DISCHARGED AT THE SITE.
11. ALL OFF-SITE WASTE AND BORROW AREAS MUST HAVE AN E&S PLAN APPROVED BY THE LOCAL CONSERVATION DISTRICT OR THE DEPARTMENT FULLY IMPLEMENTED PRIOR TO BEING ACTIVATED.
12. THE CONTRACTOR IS RESPONSIBLE FOR ENSURING THAT ANY MATERIAL BROUGHT ON SITE IS CLEAN FILL. FORM FP-001 MUST BE RETAINED BY THE PROPERTY OWNER FOR ANY FILL MATERIAL AFFECTED BY A SPILL OR RELEASE OF A REGULATED SUBSTANCE BUT QUALIFYING AS CLEAN FILL DUE TO ANALYTICAL TESTING.
13. ALL PUMPING OF WATER FROM ANY WORK AREA SHALL BE DONE ACCORDING TO THE PROCEDURE DESCRIBED IN THIS PLAN, OVER UNDISTURBED VEGETATED AREAS.
14. VEHICLES AND EQUIPMENT MAY NEITHER ENTER DIRECTLY NOR EXIT DIRECTLY FROM LIMIT OF DISTURBANCE TO PUBLIC ROADS WITHOUT PASSING OVER A ROCK CONSTRUCTION ENTRANCE.
15. UNTIL THE SITE IS STABILIZED, ALL EROSION AND SEDIMENT BMPS SHALL BE MAINTAINED PROPERLY. MAINTENANCE SHALL INCLUDE INSPECTIONS OF ALL EROSION AND SEDIMENT BMPS AFTER EACH RUNOFF EVENT AND ON A WEEKLY BASIS. ALL PREVENTATIVE AND REMEDIAL MAINTENANCE WORK, INCLUDING CLEAN OUT, REPAIR, REPLACEMENT, REGRADING, RESEEDING, REMULCHING AND RENETTING MUST BE PERFORMED IMMEDIATELY. IF THE E&S BMPS FAIL TO PERFORM AS EXPECTED, REPLACEMENT BMPS, OR MODIFICATIONS OF THOSE INSTALLED WILL BE REQUIRED.
16. A LOG SHOWING DATES THAT E&S BMPS WERE INSPECTED AS WELL AS ANY DEFICIENCIES FOUND AND THE DATE THEY WERE CORRECTED SHALL BE MAINTAINED ON THE SITE AND BE MADE AVAILABLE TO REGULATORY AGENCY OFFICIALS AT THE TIME OF INSPECTION.
17. SEDIMENT TRACKED ONTO ANY PUBLIC ROADWAY OR SIDEWALK SHALL BE RETURNED TO THE CONSTRUCTION SITE BY THE END OF EACH WORK DAY AND DISPOSED IN THE MANNER DESCRIBED IN THIS PLAN. IN NO CASE SHALL THE SEDIMENT BE WASHED, SHOVELED, OR SWEPT INTO ANY ROADSIDE DITCH, STORM SEWER, OR SURFACE WATER.
18. ALL SEDIMENT REMOVED FROM BMPS SHALL BE DISPOSED OF IN THE MANNER DESCRIBED ON THE PLAN DRAWINGS.
19. AREAS WHICH ARE TO BE TOPSOILED SHALL BE SCARIFIED TO A MINIMUM DEPTH OF 3 TO 5 INCHES -- 6 TO 12 INCHES ON COMPACTED SOILS -- PRIOR TO PLACEMENT OF TOPSOIL. AREAS TO BE VEGETATED SHALL HAVE A MINIMUM 4 INCHES OF TOPSOIL IN PLACE PRIOR TO SEEDING AND MULCHING. FILL OUTSLOPES SHALL HAVE A MINIMUM OF 2 INCHES OF TOPSOIL.
20. ALL FILLS SHALL BE COMPACTED AS REQUIRED TO REDUCE EROSION, SLIPPAGE, SETTLEMENT, SUBSIDENCE OR OTHER RELATED PROBLEMS. FILL INTENDED TO SUPPORT BUILDINGS, STRUCTURES AND CONDUITS, ETC. SHALL BE COMPACTED IN ACCORDANCE WITH LOCAL REQUIREMENTS OR CODES.
21. ALL EARTHEN FILLS SHALL BE PLACED IN COMPACTED LAYERS NOT TO EXCEED 9 INCHES IN THICKNESS.
22. FILL MATERIALS SHALL BE FREE OF FROZEN PARTICLES, BRUSH, ROOTS, SOD, OR OTHER FOREIGN OR OBJECTIONABLE MATERIALS THAT WOULD INTERFERE WITH OR PREVENT CONSTRUCTION OF SATISFACTORY FILLS.
23. FROZEN MATERIALS OR SOFT, MUCKY, OR HIGHLY COMPRESSIBLE MATERIALS SHALL NOT BE INCORPORATED INTO FILLS.
24. FILL SHALL NOT BE PLACED ON SATURATED OR FROZEN SURFACES.
25. SEEPS OR SPRINGS ENCOUNTERED DURING CONSTRUCTION SHALL BE HANDLED IN ACCORDANCE WITH THE STANDARD AND SPECIFICATION FOR SUBSURFACE DRAIN OR OTHER APPROVED METHOD.
26. IMMEDIATELY AFTER EARTH DISTURBANCE ACTIVITIES CEASE IN ANY AREA OR SUBAREA OF THE PROJECT, THE OPERATOR SHALL STABILIZE ALL DISTURBED AREAS. DURING NON-GERMINATING MONTHS, MULCH OR PROTECTIVE BLANKETING SHALL BE APPLIED AS DESCRIBED IN THE PLAN. AREAS NOT AT FINISHED GRADE, WHICH WILL BE REACTIVATED WITHIN 1 YEAR, MAY BE STABILIZED IN ACCORDANCE WITH THE TEMPORARY STABILIZATION SPECIFICATIONS. THOSE AREAS WHICH WILL NOT BE REACTIVATED WITHIN 1 YEAR SHALL BE STABILIZED IN ACCORDANCE WITH THE PERMANENT STABILIZATION SPECIFICATIONS.
27. PERMANENT STABILIZATION IS DEFINED AS A MINIMUM UNIFORM, PERENNIAL 70% VEGETATIVE COVER OR OTHER PERMANENT NON-VEGETATIVE COVER WITH A DENSITY SUFFICIENT TO RESIST ACCELERATED EROSION. CUT AND FILL SLOPES SHALL BE CAPABLE OF RESISTING FAILURE DUE TO SLUMPING, SLIDING, OR OTHER MOVEMENTS.
28. E&S BMPS SHALL REMAIN FUNCTIONAL AS SUCH UNTIL ALL AREAS TRIBUTARY TO THEM ARE PERMANENTLY STABILIZED OR UNTIL THEY ARE REPLACED BY ANOTHER BMP APPROVED BY THE LOCAL CONSERVATION DISTRICT OR THE DEPARTMENT.
29. UPON COMPLETION OF ALL EARTH DISTURBANCE ACTIVITIES AND PERMANENT STABILIZATION OF ALL DISTURBED AREAS, THE OWNER AND/OR OPERATOR SHALL CONTACT THE LOCAL CONSERVATION DISTRICT FOR AN INSPECTION PRIOR TO REMOVAL/CONVERSION OF THE E&S BMPS.
30. AFTER FINAL SITE STABILIZATION HAS BEEN ACHIEVED, TEMPORARY EROSION AND SEDIMENT BMPS MUST BE REMOVED OR CONVERTED TO PERMANENT POST CONSTRUCTION STORMWATER MANAGEMENT BMPS. AREAS DISTURBED DURING REMOVAL OR CONVERSION OF THE BMPS SHALL BE STABILIZED IMMEDIATELY. IN ORDER TO ENSURE RAPID REVEGETATION OF DISTURBED AREAS, SUCH REMOVAL/CONVERSIONS ARE TO BE DONE ONLY DURING THE GERMINATING SEASON.
31. UPON COMPLETION OF ALL EARTH DISTURBANCE ACTIVITIES AND PERMANENT STABILIZATION OF ALL DISTURBED AREAS, THE OWNER AND/OR OPERATOR SHALL CONTACT THE LOCAL CONSERVATION DISTRICT TO SCHEDULE A FINAL INSPECTION.
32. FAILURE TO CORRECTLY INSTALL E&S BMPS, FAILURE TO PREVENT SEDIMENT-LADEN RUNOFF FROM LEAVING THE CONSTRUCTION SITE, OR FAILURE TO TAKE IMMEDIATE CORRECTIVE ACTION TO RESOLVE FAILURE OF E&S BMPS MAY RESULT IN ADMINISTRATIVE, CIVIL, AND/OR CRIMINAL PENALTIES BEING INSTITUTED BY THE DEPARTMENT AS DEFINED IN SECTION 602 OF THE PENNSYLVANIA CLEAN STREAMS LAW. THE CLEAN STREAMS LAW PROVIDES FOR UP TO $10,000 PER DAY IN CIVIL PENALTIES, UP TO $10,000 IN SUMMARY CRIMINAL PENALTIES, AND UP TO $25,000 IN MISDEMEANOR CRIMINAL PENALTIES FOR EACH VIOLATION.
33. CONCRETE WASH WATER SHALL BE HANDLED IN THE MANNER DESCRIBED ON THE PLAN DRAWINGS. IN NO CASE SHALL IT BE ALLOWED TO ENTER ANY SURFACE WATERS OR GROUNDWATER SYSTEMS.
34. ALL SWALES SHALL BE KEPT FREE OF OBSTRUCTIONS INCLUDING BUT NOT LIMITED TO FILL, ROCKS, LEAVES, WOODY DEBRIS, ACCUMULATED SEDIMENT, EXCESS VEGETATION, AND CONSTRUCTION MATERIAL/WASTES.
35. UNDERGROUND UTILITIES CUTTING THROUGH ANY ACTIVE SWALE SHALL BE IMMEDIATELY BACKFILLED AND THE SWALE RESTORED TO ITS ORIGINAL CROSS-SECTION AND PROTECTIVE LINING. ANY BASE FLOW WITHIN THE SWALE SHALL BE CONVEYED PAST THE WORK AREA IN THE MANNER DESCRIBED IN THIS PLAN UNTIL SUCH RESTORATION IS COMPLETE.
36. SWALES HAVING RIPRAP, RENO MATTRESS, OR GABION LININGS MUST BE SUFFICIENTLY OVER-EXCAVATED SO THAT THE DESIGN DIMENSIONS WILL BE PROVIDED AFTER PLACEMENT OF THE PROTECTIVE LINING.
37. SEDIMENT BASINS AND/OR TRAPS SHALL BE KEPT FREE OF ALL CONSTRUCTION WASTE, WASH WATER, AND OTHER DEBRIS HAVING POTENTIAL TO CLOG THE BASIN/TRAP OUTLET STRUCTURES AND/OR POLLUTE THE SURFACE WATERS.
38. SEDIMENT BASINS SHALL BE PROTECTED FROM UNAUTHORIZED ACTS BY THIRD PARTIES.
39. ANY DAMAGE THAT OCCURS IN WHOLE OR IN PART AS A RESULT OF BASIN OR TRAP DISCHARGE SHALL BE IMMEDIATELY REPAIRED BY THE PERMITTEE IN A PERMANENT MANNER SATISFACTORY TO THE MUNICIPALITY, LOCAL CONSERVATION DISTRICT, AND THE OWNER OF THE DAMAGED PROPERTY.
40. UPON REQUEST, THE APPLICANT OR HIS CONTRACTOR SHALL PROVIDE AN AS-BUILT (RECORD DRAWING) FOR ANY SEDIMENT BASIN OR TRAP TO THE MUNICIPAL INSPECTOR, LOCAL CONSERVATION DISTRICT OR THE DEPARTMENT.
41. EROSION CONTROL BLANKETING SHALL BE INSTALLED ON ALL SLOPES 3H:1V OR STEEPER, WITHIN 100' OF A STREAM OR WETLAND IN A HIGH QUALITY OR EXCEPTIONAL VALUE WATERSHED, WITHIN 50' OF A STREAM OR WETLAND IN A NON-HIGH QUALITY OR EXCEPTIONAL VALUE WATERSHED, AND ON ALL OTHER DISTURBED AREAS SPECIFIED ON THE PLAN MAPS AND/OR DETAIL SHEETS.
42. FILL MATERIAL FOR EMBANKMENTS SHALL BE FREE OF ROOTS, OR OTHER WOODY VEGETATION, ORGANIC MATERIAL, LARGE STONES, AND OTHER OBJECTIONABLE MATERIALS. THE EMBANKMENT SHALL BE COMPACTED IN MAXIMUM 9 INCH LAYERED LIFTS AT 95% DENSITY.
43. IN AREAS OF TOPSOIL SEGREGATION, THE TOPSOIL SHALL BE DECOMPACTED TO A MINIMUM DEPTH OF 16" (24" IN HEAVILY COMPACTED AREAS) USING APPROPRIATE AGRICULTURAL RIPPER EQUIPMENT (I.E., PARABOLIC OR BENT OFF-SET) PRIOR TO THE RESTORATION OF THE TOPSOIL. AREAS TO BE REVEGETATED SHALL HAVE A MINIMUM 4 INCHES OF TOPSOIL IN PLACE PRIOR TO SEEDING AND MULCHING. FILLOUT SLOPES SHALL HAVE A MINIMUM OF 2 INCHES OF TOPSOIL.

GENERAL EROSION & SEDIMENT CONTROL NOTES

1. INSPECT SNOW PLACEMENT AREAS DURING THE THAW CYCLE. INSTALL EROSION & SEDIMENT CONTROL BMPS DURING QUICK THAWS AND WHEN SNOW MELT RUNOFF IS CONCENTRATED OR IS CAUSING EROSION.
2. DISCHARGING SEDIMENT LADEN WATER WHICH WILL CAUSE OR CONTRIBUTE TO THE DEGRADATION OF A BENEFICIAL USE OF A WATER OF THE STATE FROM THE CONSTRUCTION SITE, A DEWATERING SITE, OR SEDIMENT BASIN/TRAP INTO ANY WATER BODY OR STORM DRAIN WITHOUT FILTRATION OR EQUIVALENT TREATMENT IS PROHIBITED.
3. DISCHARGES ORIGINATING FROM OFF-SITE SOURCES, WHICH FLOW THROUGH OR ACROSS THE AREAS DISTURBED BY CONSTRUCTION, SHALL BE DIVERTED AROUND THE ACTIVE CONSTRUCTION AREA WHENEVER POSSIBLE.
4. STAGING AREAS, ASSEMBLY AREAS, TEMPORARY EQUIPMENT AND NON-HAZARDOUS MATERIAL STORAGE AREAS SHALL BE LOCATED OUTSIDE THE 100-YR FLOOD ZONE. HAZARDOUS MATERIAL STORAGE AREAS SHALL BE LOCATED AT LEAST 100 FEET BACK FROM SURFACE WATER BODIES.
5. ALL EXCAVATED MATERIALS THAT WILL NOT BE USED ON THE SITE CANNOT BE STORED IN THE FLOODPLAIN AND MUST BE HAULED TO A DISPOSAL SITE LOCATED OUTSIDE OF THE FLOODPLAIN.
6. CONSTRUCTION STAGING AREAS SHALL BE LOCATED A MINIMUM OF 50 FEET AWAY FROM THE EDGE OF A WETLAND.
7. MEASURES SHALL BE TAKEN TO PREVENT TRENCHES FROM DRAINING A WETLAND OR CHANGING ITS HYDROLOGY.
8. IT IS DESIRED THAT THE AMOUNT AND DURATION OF OPEN TRENCH BE MINIMIZED DURING THE PROJECT.
9. IF TOPSOIL PILES ARE EXPOSED FOR GREATER THAN 4 DAYS, THEY SHALL BE SEEDED WITH AN ANNUAL SEED MIXTURE AND MULCHED WITH STRAW.
10. NO EROSION CONTROL BLANKET SHALL BE INSTALLED IN AGRICULTURAL AREAS EXCEPT AS REQUIRED TO CONSTRUCT THE TEMPORARY FLUME CROSSINGS.
11. HYDRAULICALLY APPLIED EROSION CONTROL BLANKETS MAY BE USED IN LIEU OF EROSION CONTROL BLANKETS WITH PRIOR APPROVAL FROM THE COUNTY CONSERVATION DISTRICT.
12. LOCATION AND SPACING OF THE WATERBARS ARE SHOWN ON THE PLAN. WATERBARS MAY BE ADJUSTED IN THE FIELD DUE TO ACTUAL SITE CONDITIONS. HOWEVER INSTALLATION AND SPACING MUST CONFORM TO THE DETAILS PROVIDED AND APPROVAL MUST BE OBTAINED FROM THE LOCAL CONSERVATION DISTRICT OR PA DEP.
13. SEDIMENT REMOVED FROM PUBLIC ROADS OR BMPS WILL BE REUSED ON SITE OR DISPOSED OF AT A SITE WITH AN EROSION AND SEDIMENT CONTROL PLAN APPROVED BY THE LOCAL CONSERVATION DISTRICT OR DEP.
14. CONTRACTOR SHALL FAMILIARIZE HIMSELF WITH THE SOIL EROSION AND SEDIMENT CONTROL NARRATIVE AND ENVIRONMENTAL CONSTRUCTION PLAN.
15. CONTRACTOR SHALL MINIMIZE THE TOTAL AREA OF DISTURBANCE.
16. UPON TEMPORARY CESSATION OF AN EARTH DISTURBANCE ACTIVITY OR ANY STAGE OF AN ACTIVITY WHERE A CESSATION OF EARTH DISTURBANCE ACTIVITIES WILL EXCEED 4 DAYS, THE SITE SHALL BE IMMEDIATELY SEEDED, MULCHED, OR OTHERWISE PROTECTED FROM ACCELERATED E&S PENDING FUTURE EARTH DISTURBANCE ACTIVITIES. FOR AN EARTH DISTURBANCE ACTIVITY OR ANY STAGE OF AN ACTIVITY TO BE CONSIDERED TEMPORARILY STABILIZED, THE DISTURBED AREAS SHALL BE COVERED WITH ONE OF THE FOLLOWING: A MINIMUM UNIFORM COVERAGE OF MULCH AND SEED, WITH A DENSITY CAPABLE OF RESISTING ACCELERATED E&S, OR AN ACCEPTABLE BMP WHICH TEMPORARILY MINIMIZES ACCELERATED E&S. TEMPORARY STABILIZATION WILL NOT OCCUR ON ACTIVE VEHICULAR TRAVEL WAYS WITHIN THE ROW. THE ON-SITE ENVIRONMENTAL INSPECTOR WILL LOG ACTIVITY WITHIN THE PROJECT LIMITS OF DISTURBANCE AND NOTIFY THE CONTRACTOR OF AREAS REQUIRING TEMPORARY STABILIZATION.
17. IMMEDIATELY UPON DISCOVERING UNFORESEEN CIRCUMSTANCES POSING THE POTENTIAL FOR ACCELERATED EROSION AND/OR SEDIMENT POLLUTION, THE OPERATOR SHALL IMPLEMENT APPROPRIATE BMPS TO MINIMIZE THE POTENTIAL FOR EROSION AND SEDIMENT POLLUTION AND NOTIFY THE LOCAL COUNTY CONSERVATION DISTRICT AND/OR PADEP.
18. MAINTAIN TEMPORARY SOIL STOCKPILES.
19. NO EARTH DISTURBANCE ACTIVITIES WITHIN 50 FEET OF STREAM SWALES WILL BE PERFORMED UNTIL MATERIALS NEEDED TO COMPLETE THE CROSSING ARE AT THE NEAREST AVAILABLE LOCATION.
20. THE CONTRACTOR IS REQUIRED TO PROVIDE CONTINUOUS MAINTENANCE OF ALL TEMPORARY AND PERMANENT EROSION CONTROL MEASURES WITHIN DISTURBED AREAS.
21. IMMEDIATELY AFTER EARTH DISTURBANCE ACTIVITIES CEASE LONGER THAN 4 DAYS IN ANY AREA OR SUBAREA OF THE PROJECT, THE OPERATOR SHALL STABILIZE ALL SUCH INACTIVE DISTURBED AREAS.
22. DURING NON-GERMINATING MONTHS, MULCH OR PROTECTIVE BLANKETING SHALL BE APPLIED AS DESCRIBED IN THE PLAN. AREAS NOT AT FINISHED GRADE, WHICH WILL BE REACTIVATED WITHIN 1 YEAR, MAY BE STABILIZED IN ACCORDANCE WITH THE TEMPORARY STABILIZATION SPECIFICATIONS. THOSE AREAS WHICH WILL NOT BE REACTIVATED WITHIN 1 YEAR SHALL BE STABILIZED IN ACCORDANCE WITH THE PERMANENT STABILIZATION SPECIFICATIONS.
23. FOLLOW THE CONSTRUCTION/EROSION CONTROL IMPLEMENTATION PLAN AS OUTLINED ON THE DRAWINGS.
24. THE STAGING OF EARTHMOVING ACTIVITIES FOR THIS PROJECT IS A GENERAL DESCRIPTION OF THE WORK REQUIRED. ALL WORK SHALL BE COMPLETED IN ACCORDANCE WITH PROJECT OWNER STANDARDS, THE PADEP REGULATIONS, AND ALL OTHER APPLICABLE FEDERAL, STATE OR LOCAL REQUIREMENTS.
25. SCHEDULE WORK TO BE PERFORMED IN A MANNER THAT MINIMIZES THE LENGTH OF TIME THAT BARE SOIL WILL BE EXPOSED TO THE ELEMENTS.
26. ALL EARTH DISTURBANCE ACTIVITIES SHALL PROCEED IN ACCORDANCE WITH THIS SEQUENCE. EACH STAGE SHALL BE COMPLETED AND IMMEDIATELY STABILIZED BEFORE ANY FOLLOWING STAGE IS INITIATED. CLEARING, GRUBBING AND TOPSOIL STRIPPING SHALL BE LIMITED ONLY TO THOSE AREAS DESCRIBED IN EACH STAGE. IMPLEMENT EROSION CONTROL MEASURES AS SPECIFIED; HOWEVER, THE CONTRACTOR MAY INSERT ADDITIONAL CONSTRUCTION PHASES IN ORDER TO EXPEDITE HIS WORK WHILE MAINTAINING THE SAME LEVEL OF PROTECTION.ANY DEVIATION FROM THE FOLLOWING SEQUENCE MUST BE APPROVED IN WRITING FROM THE LOCAL COUNTY CONSERVATION DISTRICT. CONSTRUCTION MUST BE IN ACCORDANCE WITH THE SEQUENCE OF BMP INSTALLATION INDICATED ON SITE SPECIFIC DETAIL SHEETS. THIS SEQUENCE IS DESIGNED TO MINIMIZE SOIL EROSION AND SEDIMENTATION. THE CONTRACTOR MAY DEVIATE SLIGHTLY FROM THE STAGING OF PERMANENT SITE IMPROVEMENTS, BUT NO DEVIATION FROM THE RELATIVE ORDER OF EROSION AND SEDIMENTATION CONTROL MEASURES WILL BE ALLOWED WITHOUT WRITTEN APPROVAL FROM THE LOCAL COUNTY CONSERVATION DISTRICT OR PADEP.
29. THE FLOODWAY/FLOODPLAIN LINE SHOWN ON THE PLANS WAS DEVELOPED FROM AVAILABLE FEMA FLOODWAY MAPPING, FEMA FLOODPLAIN MAPPING, AND THE PA CHAPTER 105 FLOODWAY DEFINITION.
30. ALL OFF-SITE WASTE AND BORROW AREAS MUST HAVE AN E&S PLAN APPROVED BY THE LOCAL COUNTY CONSERVATION DISTRICT OR DEP AND BE FULLY IMPLEMENTED PRIOR TO BEING ACTIVATED. THE CONTRACTOR WILL BE RESPONSIBLE FOR THE REMOVAL OF ANY EXCESS MATERIAL AND TO DEVELOP A PLAN THAT MEETS THE CONDITIONS OF CHAPTER 102, NPDES PERMIT CONDITIONS, AND/OR OTHER STATE AND FEDERAL REGULATIONS.
31. ALL COMPOST FILTER SOCK SHOWN AT ROAD CROSSINGS IS INTENDED FOR USE DURING RESTORATION ACTIVITIES.

EXISTING CONDITIONS NOTES

1. EXISTING TOPOGRAPHY IS BASED UPON THE FOLLOWING:
   A. PHOTOGRAMMETRIC SURVEY PROVIDED BY AEROMETRIC/QUANTUM AERIAL, BASED UPON DIGITAL AERIAL IMAGERY ACQUIRED MARCH THROUGH NOVEMBER OF 2012 AND APRIL OF 2013, AND COMPILED TO NATIONAL MAP ACCURACY STANDARDS FOR SCALE 1"=100' AND 2' CONTOUR INTERVAL.
   B. SUPPLEMENTAL FIELD SURVEY DATA PROVIDED BY WILLIAMS SURVEY FOR AREAS WITHIN THE PROPOSED ACCESS ROADS CORRIDORS AND PROPOSED FACILITIES.
2. NORTH ARROW AND COORDINATES ARE BASED UPON UNIVERSAL TRANSVERSE MERCATOR WITH NORTH AMERICAN DATUM OF 1983, ZONE 18, U.S. FOOT, CENTRAL MERIDIAN 75° WEST (UTM83-18F).
3. ELEVATIONS ARE BASED UPON NORTH AMERICAN VERTICAL DATUM OF 1988 (NAVD88).
4. WETLAND AND WATERBODY DELINEATIONS ARE BASED ON ENVIRONMENTAL SURVEY DATA PROVIDED BY E&E AND ARE LIMITED TO THE AREAS WITHIN OR IN CLOSE PROXIMITY TO THE ACCESS ROADS CORRIDORS, PROPOSED FACILITIES, AND PIPELINES.
5. APPROXIMATE PROPERTY LINES ARE BASED UPON DIGITAL MAPPING PROVIDED BY WILLIAMS SURVEY AND ARE DEPICTED FOR GENERAL INFORMATION ONLY.
6. LAND OWNER IDENTIFICATION IS BASED ON INFORMATION PROVIDED BY WILLIAMS SURVEY AND IS FOR GENERAL INFORMATION ONLY.
7. THE CONTRACTOR SHALL VERIFY ALL EXISTING CONDITIONS PRIOR TO CONSTRUCTION. THE CONTRACTOR SHALL IMMEDIATELY NOTIFY WILLIAMS AND ITS ENGINEER OF ANY CONDITIONS THAT VARY FROM WHAT IS DEPICTED ON THIS PLAN.

THERMAL IMPACT ANALYSIS

IN ORDER TO AVOID THERMAL IMPACTS, THE LIMIT OF DISTURBANCE WITHIN THE PIPELINE RIGHT-OF-WAY HAS BEEN MINIMIZED TO THE MAXIMUM EXTENT PRACTICABLE. ADDITIONALLY, ALL DISTURBED AREA WILL BE RESTORED TO AN EXISTING, VEGETATIVE CONDITION FOLLOWING CONSTRUCTION.

THE FOLLOWING PROVISIONS RELATED TO THERMAL IMPACTS BY ACCESS ROADS ARE INCLUDED IN THE E&SC ACCESS ROAD PLANS:

- THE MINIMUM PERMANENT CHANGES IN LAND COVER, NECESSARY TO CONSTRUCT THE REQUIRED FACILITIES ARE BEING PROPOSED.
- RUNOFF FROM THE PERMANENT IMPERVIOUS AREA WILL BE COLLECTED AS PART OF THE POST CONSTRUCTION STORMWATER MANAGEMENT / SITE RESTORATION (PCSM/SR) PLAN AND ROUTED TO PCSM/SR BMPs. IN ADDITION, IMPERVIOUS AREAS WILL BE GRAVEL INSTEAD OF ASPHALT WHEREVER PRACTICAL.
- THE REMOVAL OF VEGETATION, ESPECIALLY TREE COVER, WILL BE LIMITED TO ONLY THAT NECESSARY FOR CONSTRUCTION.
- THE IMPACTS TO EXISTING RIPARIAN CORRIDORS WILL BE LIMITED TO ONLY THAT NECESSARY FOR CONSTRUCTION.
- THE AMOUNT OF IMPERVIOUS SURFACES WILL BE LIMITED TO ONLY THAT NECESSARY TO SUPPORT THE CONSTRUCTION OF THE PIPELINE AND/OR OPERATION OF THE PIPELINE.
- ALL DISTURBED AREAS WILL BE RESTORED TO AN EXISTING, VEGETATIVE CONDITION FOLLOWING CONSTRUCTION AND IN ACCORDANCE WITH CHAPTER 102 AND ESCGP-2 PERMIT REQUIREMENTS FOR LINEAR OIL AND GAS PROJECTS.

NOTICES TO CONTRACTOR

1. THE CONTRACTOR SHALL OBTAIN ALL REQUIRED PERMITS PRIOR TO STARTING WORK.
2. THE CONTRACTOR SHALL ASSURE THAT THE APPROVED EROSION AND SEDIMENT CONTROL PLAN IS PROPERLY AND COMPLETELY IMPLEMENTED.
3. WATERBARS IN AGRICULTURAL/FARM FIELDS ARE TEMPORARY AND SHALL BE REMOVED AND RESTABILIZED UPON ESTABLISHMENT OF A UNIFORM 70 PERCENT PERMANENT VEGETATIVE COVER WITHIN THE UPSLOPE TRIBUTARY DRAINAGE AREA PER PA CHAPTER 102.22.
4. ALL WORK WITHIN THE PUBLIC RIGHT-OF-WAY SHALL BE COORDINATED WITH THE AGENCY HAVING JURISDICTION.
5. FURNISH & INSTALL SWALES WHENEVER CONCENTRATED FLOWS HAVE THE POTENTIAL TO RUN ONTO OR THROUGH THE CONSTRUCTION AREA. DIRECT THE SWALE DISCHARGE TO A RIP RAP ENERGY DISSIPATER AND VEGETATED AREA.
6. THE CONTRACTORS SHALL BE ADDED AS CO-PERMITEES TO THE ESCGP-2 PERMIT.

RECEIVING WATERCOURSE - CHAPTER 93 DESIGNATION

REFER TO THE PIPELINE AND ACCESS ROAD PLANS FOR THE LOCATION, NAME AND CHAPTER 93 WATERCOURSE DESIGNATIONS. A SUMMARY TABLE OF THE WATERBODIES CROSSED BY THE PIPELINE AND CHAPTER 93 DESIGNATIONS ARE PROVIDED IN THE COUNTY-SPECIFIC TABLES INCLUDED AT THE END OF THIS PLAN SET.

RECYCLING AND DISPOSAL METHODS

THE RESTORATION OF THE PIPELINE RIGHT-OF-WAY WILL REQUIRE THE REMOVAL OF THE TEMPORARY MATERIALS. THE TEMPORARY MATERIALS INCLUDE, BUT MAY NOT BE LIMITED TO, STONE SURFACES AND ASSOCIATED GEOTEXTILES. THE CONTRACTORS ARE REQUIRED TO DISPOSE OF THE MATERIALS AT SUITABLE DISPOSALS OR RECYCLING SITES AND IN COMPLIANCE WITH LOCAL, STATE AND FEDERAL REGULATIONS.

CONTRACTORS ARE REQUIRED TO INVENTORY AND MANAGE THEIR CONSTRUCTION SITE MATERIALS. THE GOAL IS TO BE AWARE OF THE MATERIALS ON-SITE, ENSURE THEY ARE PROPERLY MAINTAINED, USED, AND DISPOSED OF, AND TO MAKE SURE THE MATERIALS ARE NOT EXPOSED TO STORMWATER.

MATERIALS COVERED

THE FOLLOWING MATERIALS OR SUBSTANCES ARE EXPECTED TO BE PRESENT ON-SITE DURING CONSTRUCTION (NOTE: THIS LIST IS NOT AN ALL-INCLUSIVE LIST AND THE MATERIALS MANAGEMENT PLAN CAN BE MODIFIED TO ADDRESS ADDITIONAL MATERIALS USED ON-SITE):
- ACIDS
- DETERGENTS
- FERTILIZERS (NITROGEN/PHOSPHORUS)
- HYDROSEEDING MIXTURES
- PETROLEUM BASED PRODUCTS
- SANITARY WASTES
- SOIL STABILIZATION ADDITIVES
- SOLDER
- SOLVENTS
- OTHER (LIST HERE): ______________________________

THESE MATERIALS MUST BE STORED AS APPROPRIATE AND SHALL NOT CONTACT STORM OR NON-STORMWATER DISCHARGES. CONTRACTOR SHALL PROVIDE A WEATHER PROOF CONTAINER TO STORE CHEMICALS OR ERODIBLE SUBSTANCES THAT MUST BE KEPT ON THE SITE. CONTRACTOR IS RESPONSIBLE FOR READING, MAINTAINING, AND MAKING EMPLOYEES AND SUBCONTRACTORS AWARE OF MATERIAL SAFETY DATA SHEETS (MSDSs).

MATERIAL MANAGEMENT PRACTICES

THE FOLLOWING ARE MATERIAL MANAGEMENT PRACTICES THAT WILL BE USED TO REDUCE THE RISK OF SPILLS OR OTHER ACCIDENTAL EXPOSURE OF MATERIALS AND SUBSTANCES TO STORMWATER RUNOFF.

1. GOOD HOUSEKEEPING PRACTICES

THE FOLLOWING GOOD HOUSEKEEPING PRACTICES WILL BE FOLLOWED ON SITE DURING CONSTRUCTION:

- STORE ONLY ENOUGH MATERIAL REQUIRED TO DO THE JOB.
- STORE MATERIALS IN A NEAT, ORDERLY MANNER.
- STORE CHEMICALS IN WATERTIGHT CONTAINERS OR IN A STORAGE SHED, UNDER A ROOF, COMPLETELY ENCLOSED, WITH APPROPRIATE SECONDARY CONTAINMENT TO PREVENT SPILL OR LEAKAGE. DRIP PANS SHALL BE PROVIDED UNDER DISPENSERS.
- SUBSTANCES WILL NOT BE MIXED WITH ONE ANOTHER UNLESS RECOMMENDED BY THE MANUFACTURER.
- MANUFACTURER'S RECOMMENDATIONS FOR PROPER USE AND DISPOSAL WILL BE FOLLOWED.
- INSPECTIONS WILL BE PERFORMED TO ENSURE PROPER USE AND DISPOSAL OF MATERIALS.
- COVER AND BERM LOOSE STOCKPILED CONSTRUCTION MATERIALS THAT ARE NOT ACTIVELY BEING USED (I.E. SOIL, SPOILS, AGGREGATE, ETC.).
- MINIMIZE EXPOSURE OF CONSTRUCTION MATERIALS TO PRECIPITATION.
- MINIMIZE THE POTENTIAL FOR OFF-SITE TRACKING OF LOOSE CONSTRUCTION AND LANDSCAPE MATERIALS.

2. HAZARDOUS PRODUCTS

THESE PRACTICES WILL BE USED TO REDUCE THE RISKS ASSOCIATED WITH HAZARDOUS MATERIALS. MSDSS FOR EACH SUBSTANCE WITH HAZARDOUS PROPERTIES THAT IS USED ON THE JOB SITE(S) WILL BE OBTAINED AND USED FOR THE PROPER MANAGEMENT OF POTENTIAL WASTES THAT MAY RESULT FROM THESE PRODUCTS. A MSDS WILL BE POSTED IN THE IMMEDIATE AREA WHERE SUCH PRODUCT IS STORED AND/OR USED AND ANOTHER COPY OF EACH MSDS WILL BE MAINTAINED IN A FILE AT THE JOB SITE CONSTRUCTION TRAILER OFFICE. EACH EMPLOYEE WHO MUST HANDLE A SUBSTANCE WITH HAZARDOUS PROPERTIES WILL BE INSTRUCTED ON THE USE OF MSDS AND THE SPECIFIC INFORMATION IN THE APPLICABLE MSDS FOR THE PRODUCT HE/SHE IS USING, PARTICULARLY REGARDING SPILL CONTROL TECHNIQUES.

- PRODUCTS WILL BE KEPT IN ORIGINAL CONTAINERS WITH THE ORIGINAL LABELS IN LEGIBLE CONDITION.
- ORIGINAL LABELS AND MSDSS WILL BE PRODUCED AND USED FOR EACH MATERIAL.
- IF SURPLUS PRODUCT MUST BE DISPOSED OF, MANUFACTURER'S OR LOCAL/STATE/FEDERAL RECOMMENDED METHODS FOR PROPER DISPOSAL WILL BE FOLLOWED.

3. HAZARDOUS WASTES

ALL HAZARDOUS WASTE MATERIALS WILL BE DISPOSED OF BY THE CONTRACTOR IN THE MANNER SPECIFIED BY LOCAL, STATE, AND/OR FEDERAL REGULATIONS AND BY THE MANUFACTURER OF SUCH PRODUCTS. SITE PERSONNEL WILL BE INSTRUCTED.

4. CONCRETE AND OTHER WASH WATERS

PREVENT DISPOSAL OF RINSE, WASH WATERS, OR MATERIALS ON IMPERVIOUS OR PERVIOUS SURFACES, INTO STREAMS, WETLANDS OR OTHER WATER BODIES.

CONCRETE TRUCKS WILL BE ALLOWED TO WASH OUT OR DISCHARGE SURPLUS CONCRETE OR DRUM WASH WATER ON THE SITE, BUT ONLY IN EITHER (1) SPECIFICALLY DESIGNATED DIKED AREAS WHICH HAVE BEEN PREPARED TO PREVENT CONTACT BETWEEN THE CONCRETE AND/OR WASHOUT AND SOIL AND STORMWATER HAVING THE POTENTIAL TO BE DISCHARGED FROM THE SITE OR (2) IN LOCATIONS WHERE WASTE CONCRETE CAN BE POURED INTO FORMS TO MAKE RIPRAP OR OTHER USEFUL CONCRETE PRODUCTS.

THE HARDENED RESIDUE FROM THE CONCRETE WASHOUT DIKED AREAS WILL BE DISPOSED OF IN THE SAME MANNER AS OTHER NON-HAZARDOUS CONSTRUCTION WASTE MATERIALS OR MAY BE BROKEN UP AND USED ON THE SITE AS DEEMED APPROPRIATE BY THE CONTRACTOR AND GEOTECHNICAL ENGINEER. THE CONTRACTOR WILL BE RESPONSIBLE FOR SEEING THAT THESE PROCEDURES ARE FOLLOWED.

ALL CONCRETE WASHOUT AREAS WILL BE LOCATED IN AN AREA WHERE THE LIKELIHOOD OF THE AREA CONTRIBUTING TO STORMWATER DISCHARGE IS NEGLIGIBLE. IF REQUIRED, ADDITIONAL BMPS MUST BE IMPLEMENTED TO PREVENT CONCRETE WASTES FROM CONTRIBUTING TO STORMWATER DISCHARGES. THE LOCATION OF THE CONCRETE WASHOUT AREA(S) MUST BE IDENTIFIED, BY THE CONTRACTOR/JOB SITE SUPERINTENDENT, ON THE JOB SITE COPY OF THE EROSION AND SEDIMENT CONTROL PLAN(S) IN THIS ESCP.

5. SANITARY WASTES

ALL SANITARY WASTE UNITS WILL BE LOCATED IN AN AREA WHERE THE LIKELIHOOD OF THE UNIT CONTRIBUTING TO STORMWATER DISCHARGES IS NEGLIGIBLE. ADDITIONAL BMPS MUST BE IMPLEMENTED, SUCH AS CONTAINMENT TRAYS (PROVIDED BY THE RENTAL COMPANY) OR SPECIAL CONTAINMENT CREATED WITH 2"X4" LUMBER, IMPERVIOUS PLASTIC, AND GRAVEL. THE LOCATION OF THE SANITARY WASTE UNITS MUST BE IDENTIFIED ON THE JOB SITE COPY OF THE EROSION AND SEDIMENT CONTROL PLAN(S), IN THIS ESCP, BY THE CONTRACTOR/JOB SITE SUPERINTENDENT.

6. SOLID AND CONSTRUCTION WASTES

ALL WASTE MATERIALS WILL BE COLLECTED AND STORED IN A SECURELY LIDDED METAL DUMPSTER. THE DUMPSTER WILL COMPLY WITH ALL LOCAL AND STATE SOLID WASTE MANAGEMENT REGULATIONS. THE DUMPSTER/CONTAINER LIDS SHALL BE CLOSED AT THE END OF EVERY BUSINESS DAY AND DURING RAIN EVENTS. APPROPRIATE MEASURES SHALL BE TAKEN TO PREVENT DISCHARGES FROM WASTE DISPOSAL CONTAINERS TO THE RECEIVING WATER.

7. CONSTRUCTION ACCESS

A STABILIZED CONSTRUCTION ENTRANCE WILL BE PROVIDED TO HELP REDUCE VEHICLE TRACKING OF SEDIMENTS. THE PAVED ROADS ADJACENT TO THE SITE ENTRANCE WILL BE INSPECTED DAILY AND SWEPT AS NECESSARY TO REMOVE ANY EXCESS MUD, DIRT, OR ROCK TRACKED FROM THE SITE. DUMP TRUCKS HAULING MATERIAL FROM THE CONSTRUCTION SITE WILL BE COVERED WITH A TARPAULIN AS NECESSARY.

8. PETROLEUM PRODUCTS

ON-SITE VEHICLES WILL BE MONITORED FOR LEAKS AND RECEIVE REGULAR PREVENTATIVE MAINTENANCE. PETROLEUM PRODUCTS WILL BE STORED IN TIGHTLY SEALED CONTAINERS WHICH ARE CLEARLY LABELED. PETROLEUM STORAGE TANKS ON SITE WILL HAVE A DIKE OR BERM CONTAINMENT STRUCTURE CONSTRUCTED AROUND IT TO CONTAIN SPILLS WHICH MAY OCCUR (CONTAINMENT VOLUME TO BE 110% OF VOLUME STORED). THE DIKE OR BERMED AREA SHALL BE LINED WITH AN IMPERVIOUS MATERIAL SUCH AS A HEAVY DUTY PLASTIC SHEET. DRIP PANS SHALL BE PROVIDED FOR ALL DISPENSERS. ANY ASPHALT SUBSTANCES USED ON THE SITE WILL BE APPLIED ACCORDING TO THE MANUFACTURER'S RECOMMENDATIONS.

9. FERTILIZERS AND LANDSCAPE MATERIALS

FERTILIZERS WILL BE APPLIED ONLY IN THE MINIMUM AMOUNTS RECOMMENDED BY THE MANUFACTURER. ONCE APPLIED, FERTILIZER WILL BE WORKED INTO THE SOIL TO MINIMIZE THE POTENTIAL FOR EXPOSURE TO STORMWATER. STORAGE WILL BE UNDER COVER. THE CONTENTS OF ANY PARTIALLY USED BAGS OF FERTILIZER WILL BE TRANSFERRED TO A SEALABLE PLASTIC BIN TO MINIMIZE THE POTENTIAL FOR SPILLS. THE BIN SHALL BE LABELED APPROPRIATELY.

CONTAIN STOCKPILED MATERIALS, SUCH AS BUT NOT LIMITED TO, MULCHES, TOP SOIL, ROCKS AND GRAVEL, AND DECOMPOSED GRANITE, WHEN THEY ARE NOT ACTIVELY BEING USED.

APPLY ERODIBLE LANDSCAPE MATERIAL AT QUANTITIES AND APPLICATION RATES ACCORDING TO MANUFACTURER RECOMMENDATIONS OR BASED ON WRITTEN SPECIFICATIONS BY KNOWLEDGEABLE AND EXPERIENCED FIELD PERSONNEL. DISCONTINUE THE APPLICATION OF ANY ERODIBLE LANDSCAPE MATERIAL WITHIN TWO DAYS PRIOR TO A FORECASTED RAIN EVENT OR DURING PERIODS OF PRECIPITATION.

10. PAINTS, PAINT SOLVENTS AND CLEANING SOLVENTS

CONTAINERS WILL BE TIGHTLY SEALED AND STORED WHEN NOT IN USE. EXCESS PAINT AND SOLVENTS WILL BE PROPERLY DISPOSED OF ACCORDING TO MANUFACTURER'S INSTRUCTIONS OR LOCAL/STATE/FEDERAL REGULATIONS.

11. CONTAMINATED SOILS

ANY CONTAMINATED SOILS (RESULTING FROM SPILLS OF MATERIALS WITH HAZARDOUS PROPERTIES) WHICH MAY RESULT FROM CONSTRUCTION ACTIVITIES WILL BE CONTAINED AND CLEANED UP IMMEDIATELY IN ACCORDANCE WITH APPLICABLE STATE AND FEDERAL REGULATIONS.

12. OFF-SITE WASTE AND BORROW AREAS

ALL OFF-SITE WASTE AND BORROW AREAS MUST HAVE AN E&S PLAN APPROVED BY THE LOCAL COUNTY CONSERVATION DISTRICT OF PADEP FULLY IMPLEMENTED PRIOR TO BEING ACTIVATED. THE CONTRACTOR WILL BE RESPONSIBLE FOR THE REMOVAL OF ANY EXCESS MATERIAL AND TO DEVELOP A PLAN THAT MEETS THE CONDITIONS OF CHAPTER 102, NPDES PERMIT CONDITIONS, AND/OR OTHER STATE AND FEDERAL REGULATIONS.

EARTH DISTURBANCE ACTIVITY - PAST, PRESENT, AND FUTURE LAND USES

REFER TO THE PIPELINE AND ACCESS ROAD EROSION AND SEDIMENTATION CONTROL PLANS FOR LAND USE INFORMATION.

COMMONWEALTH OF PENNSYLVANIA REGISTERED PROFESSIONAL SUZANNE MARIE KING ENGINEER PE082757

SUZANNE KING REG NO. PE 082757

BL Companies — ARCHITECTURE ENGINEERING ENVIRONMENTAL LAND SURVEYING

REVISIONS

NO.	DATE	BY	DESCRIPTION	W.O. NO.	CHK.	APP.
0	08/28/2015	BL	ISSUED FOR PADEP SUBMITTAL	W0572385	JLK	SMK
1	12/02/2015	BL	ISSUED FOR PADEP RESUBMITTAL	W0572385	JLK	SMK
2	Oct. 2016	BL	PADEP TECHNICAL DEFICIENCY RESPONSE #1	W0572385	JLK	SMK
3	April 2017	BL	PADEP TECHNICAL DEFICIENCY RESPONSE #2	W0572385	JLK	SMK
4	AUG. 2017	BL	PADEP TECHNICAL DEFICIENCY RESPONSE #3	W0572385	JLK	AJB

TRANSCONTINENTAL GAS PIPE LINE COMPANY, LLC
ATLANTIC SUNRISE PROJECT
PENNSYLVANIA BEST MANAGEMENT PRACTICES AND QUANTITIES PLAN SET

Williams GAS PIPELINE

GENERAL NOTES

DRAWN BY: ELZ	DATE: 05/15/15	ISSUED FOR BID:		SCALE:	
CHECKED BY: JLK	DATE: 07/02/15	ISSUED FOR CONSTRUCTION:		REVISION:	4
APPROVED BY: SMK	DATE: 07/08/15	DRAWING NUMBER:	ASR-BMP-GN	SHEET 1	
WO:				OF 3	

Drawn By & Date/Time: CScanzello Jul 28, 2017 - 8:09am
Drawing Location & Name: G:\JOBS14\14C\14C4909\DWG\BMPs&DETAILS\PL_DN14C4909(02)_NOTES-02-03.dwg

PIPELINE BMP INSTALLATION SEQUENCE

DUE TO THE LENGTH OF THE PROJECT (IN MILES) IT IS ANTICIPATED THAT THE CONTRACTOR WILL CONSTRUCT THE PROJECT IN DISCRETE SEGMENTS, TYPICALLLY USING WATERBODIES AND ROAD CROSSINGS AS BREAK POINTS. IN ADDITION, IT IS EXPECTED THAT MULTIPLE SEGMENTS WILL BE IN CONSTRUCTION AT ONE TIME, SOME BEING CLEARED AND PREPARED, SOME IN ACTIVE PIPELINE CONSTRUCTION AND SOME IN RESTORATION.

ROAD AND WATERBODY CROSSINGS MAY BE CONDUCTED BY SEPARATE CREWS, IN PARALLEL WITH MAIN LINE CREWS. SEE 'PIPELINE WORK SEQUENCE IN WETLANDS' AND 'PIPELINE WORK SEQUENCE AT STREAM CROSSINGS' FOR APPLICABLE WETLAND AND STREAM CROSSINGS.

1. AT LEAST 7 DAYS PRIOR TO STARTING ANY EARTH DISTURBANCE ACTIVITIES, INCLUDING CLEARING AND GRUBBING, THE OWNER AND/OR OPERATOR SHALL INVITE ALL CONTRACTORS, ENVIRONMENTAL INSPECTORS, THE LANDOWNER, APPROPRIATE MUNICIPAL OFFICIALS, THE E&S PLAN PREPARER, THE PCSM PLAN PREPARER, THE LICENSED PROFESSIONAL RESPONSIBLE FOR OVERSIGHT OF CRITICAL STAGES OF IMPLEMENTATION OF THE PCSM PLAN, AND A REPRESENTATIVE FROM THE LOCAL CONSERVATION DISTRICT TO AN ON-SITE PRECONSTRUCTION MEETING.
2. AT LEAST 3 DAYS PRIOR TO STARTING ANY EARTH DISTURBANCE ACTIVITIES, OR EXPANDING INTO AN AREA PREVIOUSLY UNMARKED, THE PENNSYLVANIA ONE CALL SYSTEM INC. SHALL BE NOTIFIED AT 1-800-242-1776 FOR THE LOCATION OF EXISTING UNDERGROUND UTILITIES.
3. HOLD PRE-CONSTRUCTION CONFERENCE WITH THE ENVIRONMENTAL INSPECTORS, LOCAL COUNTY CONSERVATION DISTRICT (CCD), PADEP, AND DESIGN ENGINEER.
4. LOCATE STAGING AREAS AND ACCESS POINTS INCLUDING CONSTRUCTION ENTRANCES.
5. FIELD LOCATE AND STAKE THE LOD.
6. LOCATE, STAKE AND/OR INSTALL ORANGE CONSTRUCTION FENCE AROUND SPECIAL AREAS OF CONCERN (I.E. WETLANDS, STREAMS, CULTURAL RESOURCES…)
7. PERFORM NON-MECHANIZED TREE CUTTING WHERE REQUIRED.
8. INSTALL CONSTRUCTION ENTRANCES.
9. INSTALL BRIDGE EQUIPMENT CROSSINGS, TIMBER MATTING CONSTRUCTION, TIMBER MATTING AIR BRIDGES, AND SEDIMENT BARRIER AT WATERBODY CROSSINGS AS INDICATED ON THE PLANS.
10. ALL OFF-SITE WASTE AND BORROW AREAS MUST HAVE AN E&S PLAN APPROVED BY THE LOCAL COUNTY CONSERVATION DISTRICT OR DEP AND BE FULLY IMPLEMENTED PRIOR TO BEING ACTIVATED. THE CONTRACTOR WILL BE RESPONSIBLE FOR THE REMOVAL OF ANY EXCESS MATERIAL AND TO DEVELOP A PLAN THAT MEETS THE CONDITIONS OF CHAPTER 102, NPDES PERMIT CONDITIONS, AND/OR OTHER STATE AND FEDERAL REGULATIONS.
11. REMOVE BRUSH, INCLUDING STUMPS, ONLY IN AREAS NECESSARY TO EFFECTIVELY INSTALL PERIMETER SEDIMENT BARRIERS, UPSLOPE TEMPORARY FILTER SOCK DIVERSIONS AND TEMPORARY DIVERSION SWALES. LEVEL SIDE CUTS REQUIRED TO GRANT ACCESS FOR VEHICLES AND WORKERS TO SAFELY PERFORM THE INSTALLATION OF SEDIMENT BARRIERS AS SHOWN ON THE E&SC PLANS.
12. INSTALL PERIMETER CONTROLS (SEDIMENT BARRIERS). ACCESS REQUIREMENTS FOR PERIMETER CONTROLS ALONG PRIVATE DRIVES WITHIN THE LOD SHALL BE IN ACCORDANCE WITH THE LANDOWNER AGREEMENTS.
13. INSTALL PERMANENT AND TEMPORARY ACCESS ROADS AND ASSOCIATED BMPS (VEGETATED ROADSIDE DITCHES, DITCH RELIEF CULVERTS, AND RIPRAP OUTLET PROTECTION). SEE ACCESS ROAD SEQUENCE OF CONSTRUCTION FOR SPECIFIC CONSTRUCTION STEPS ASSOCIATED WITH ROAD CONSTRUCTION (PROVIDED IN SECTION 2 OF THE ESCGP-2 NOI). SPECIFIC ACCESS ROAD CONSTRUCTION SEQUENCE NOTES ARE INCLUDED IN THE ACCESS ROAD E&S PLAN SETS.
14. THE COMPLIANCE MANAGER SHALL PROVIDE PADEP AT LEAST THREE DAYS' NOTICE PRIOR TO BULK EARTH DISTURBANCE AND UPON COMPLETED INSTALLATION OF PERIMETER EROSION CONTROLS.
15. HAVE SURVEY CREWS LOCATE AND RE-STAKE AS NEEDED, IF ANY STAKES ARE DAMAGED, IN ALL SPECIAL AREAS OF CONCERN (I.E., WETLANDS, STREAMS, ETC.)
16. UPON TEMPORARY CESSATION OF AN EARTH DISTURBANCE ACTIVITY OR ANY STAGE OF AN ACTIVITY WHERE THE CESSATION OF EARTH DISTURBANCE ACTIVITIES WILL EXCEED FOUR DAYS, THE SITE SHALL BE IMMEDIATELY SEEDED, MULCHED, OR OTHERWISE PROTECTED FROM ACCELERATED EROSION AND SEDIMENTATION PENDING FUTURE EARTH DISTURBANCE ACTIVITIES. FOR AN EARTH DISTURBANCE ACTIVITY OR ANY STAGE OF AN ACTIVITY TO BE CONSIDERED TEMPORARILY STABILIZED, THE DISTURBED AREAS SHALL BE COVERED WITH ONE OF THE FOLLOWING: A MINIMUM UNIFORM COVERAGE OF MULCH AND SEED, WITH A DENSITY CAPABLE OF RESISTING ACCELERATED EROSION AND SEDIMENTATION, OR AN ACCEPTABLE EROSION AND SEDIMENTATION BMP WHICH TEMPORARILY MINIMIZES ACCELERATED EROSION AND SEDIMENTATION. TEMPORARY STABILIZATION WILL NOT OCCUR ON ACTIVE VEHICULAR TRAVEL WAYS WITHIN THE ROW.
17. PROCEED WITH MAJOR CLEARING AND GRUBBING.
18. BEGIN CONSTRUCTION STAKING FOR TEMPORARY GRADING.
19. CLEAR, GRUB, AND CONSTRUCT STREAM AND WETLAND CROSSINGS IN ACCORDANCE WITH CHAPTER 105, SECTION 404, 401, AND RELATED PERMITS. INSTALL STREAM FLUMES, AND/OR DAM AND PUMP AS SPECIFIED IN CHAPTER 105 PERMIT DOCUMENTS FOR CROSSING OF STREAM AND WETLAND AREAS. CONTRACTOR SHALL PLACE PIPE, INSTALL TRENCH PLUGS, BACKFILL TRENCH, AND TEMPORARILY STABILIZE WITHIN 48 HOURS OF EXCAVATING TRENCH IN RESOURCE CROSSING LOCATIONS.
20. INSTALL CLEAN WATER CROSSINGS, INCLUDING TEMPORARY SLOPE PIPES, LEVEL SPREADERS, AND RIP RAP APRON ENERGY DISSIPATERS.
21. AS THE GRUBBING OPERATION COMMENCES, INSTALL ROCK FILTERS AND WATERBARS ALONG THE PIPELINE ALIGNMENT.
22. STRIP AND STOCKPILE TOPSOIL; INSTALL SEDIMENT BARRIERS AROUND STOCKPILES.
23. HAUL PIPE TO RIGHT-OF-WAY. BEND, PLACE ON SUPPORTS, ALIGN, AND WELD. LAY PIPE IN DITCH.
24. CONTRACTOR SHALL PLACE PIPE AND INSTALL TRENCH PLUGS.
25. PERFORM NON-DESTRUCTIVE TESTING (NDT) INSPECTION OF WELDS AND APPLY COATING TO WELD AREA.
26. BACKFILL PIPE TRENCH WITHIN 30 DAYS OF EXCAVATING, REPAIR PERMANENT WATERBARS, REMOVE TEMPORARY WATERBARS, RETURN TEMPORARILY GRADED AREAS TO PRE-DEVELOPMENT GRADE, REPAIR/INSTALL EROSION CONTROL BLANKET AS NEEDED, REPLACE TOPSOIL AND IMMEDIATELY SEED AND STABILIZE DISTURBED AREAS (SLOPES, DITCHES AND CHANNELS) AS THEY ARE RETURNED TO FINAL GRADE. REFER TO PLANTING PLANS AND RIPARIAN BUFFER PLANTINGS, AS APPLICABLE, IN THE BMP PLAN SET AND E&S NARRATIVE. ANY AREA THAT USED STONE AND/OR TIMBER MATS FOR TEMPORARY STABILIZATION AND/OR ACCESS WILL BE COMPLETELY REMOVED. DECOMPACT SOILS IN ACCORDANCE WITH THE ENVIRONMENTAL CONSTRUCTION PLAN (ECP) (SECTION 4 OF THE NOI). THE SUBSOIL WILL BE FRACTURED BY DEEP RIPPING TO A DEPTH OF NOT LESS THAN 16 INCHES BELOW THE SURFACE OF THE SUBSOIL WITH THE APPROPRIATE AGRICULTURAL RIPPER (I.E., PARABOLIC OR BENT OFF-SET). SUBSURFACE FEATURES (I.E., DRAIN TILES, OTHER UTILITIES) MAY WARRANT SHALLOWER DEPTH. IF SUBSURFACE FEATURES ARE WITHIN 16 INCHES OF THE SURFACE DEEP RIPPING WILL OCCUR TO A DEPTH NOT TO EXCEED 4 INCHES OF THE EXPECTED DEPTH OF THE SUBSURACE FEATUER. IN AREAS OF MAJOR COMPACTION (I.E., HEAVY TRAFFIC AREAS NOT PROTECTED BY TIMBER MATS), SUBSOIL WILL BE FRACTURED BY DEEP RIPPING TO A DEPTH OF NOT LESS THAN 24 INCHES BELOW THE SURFACE OF THE SUBSOIL. RE-ESTABLISH PRECONSTRUCTION CONTOURS, AND REPLACE TOPSOIL TO A MINIMUM OF 4-8 INCHES DEEP AND SEED AND MULCH AREAS. VEHICULAR TRAFFIC SHOULD BE RESTRICTED FROM AREAS TO PREVENT SOIL COMPACTION.
27. TRANSCO WILL COMPLETE UPLAND FINAL GRADING, TOPSOIL REPLACEMENT, INSTALLATION OF PERMANENT E&S MEASURES WITHIN 20 DAYS AFTER BACKFILLING THE TRENCH IN ALL AREAS EXCEPT RESIDENTIAL AREAS, WHICH WILL BE COMPLETED WITHIN 10 DAYS.
28. PERFORM HYDROSTATIC PRESSURE TEST OF PIPELINE.
29. DEWATER PIPELINE UTILIZING APPROPRIATE BMPS, COMPLETE FINAL TIE-INS, AND DRY PIPELINE.
30. AN AREA SHALL BE CONSIDERED TO HAVE ACHIEVED FINAL STABILIZATION WHEN IT HAS A MINIMUM UNIFORM 70% PERENNIAL VEGETATIVE COVER OR OTHER PERMANENT NON-VEGETATIVE COVER WITH A DENSITY SUFFICIENT TO RESIST ACCELERATED SURFACE EROSION AND SUBSURFACE CHARACTERISTICS SUFFICIENT TO RESIST SLIDING AND OTHER MOVEMENTS. WHEN CONTROLS ARE TO BE REMOVED IN AGRICULTURAL NON-SENSITIVE AREAS (STREAMS/WETLANDS), AGRICULTURAL LANDOWNERS SHALL MAINTAIN AGRICULTURAL BMPs PER PADEP REGULATIONS.
31. UPON COMPLETION OF ALL EARTH DISTURBANCE ACTIVITIES AND PERMANENT STABILIZATION OF ALL DISTURBED AREAS, THE PERMITTEE AND/OR OPERATORS SHALL CONTACT THE LOCAL CCD AND/OR PADEP FOR AN INSPECTION PRIOR TO THE REMOVAL OF THE E&SC BMPS. REMOVAL OF TEMPORARY WETLAND AND STREAM CROSSINGS, TEMPORARY BMPS INCLUDING SEDIMENT BARRIERS, TEMPORARY FILTER SOCK DIVERSION SWALES, TEMPORARY CLEAN WATER DIVERSION SWALES (AND ASSOCIATED GRADING), CLEAN WATER CROSSING OUTFALL PROTECTION AND LEVEL SPREADERS, ROCK FILTERS, AND TEMPORARY WATERBARS ALONG THE ALIGNMENT.
32. ALL GRADED AREAS SHALL BE PERMANENTLY STABILIZED IMMEDIATELY UPON REACHING FINISHED GRADE. CUT SLOPES IN COMPETENT BEDROCK AND ROCK FILLS NEED NOT BE VEGETATED. SEEDED AREAS WITHIN 100 FEET OF A HQ/EV SURFACE WATER AND WITHIN 50 FEET OF NON-HQ/EV SURFACE WATER, OR AS OTHERWISE SHOWN ON THE PLAN DRAWINGS, SHALL BE BLANKETED ACCORDING TO THE STANDARDS OF THIS PLAN.
33. COMPLETE SITE RESTORATION AND STABILIZATION, INCLUDING SOIL AERATION, SOIL TREATMENT, SEED APPLICATION AND MULCHING IN AREAS DISTURBED BY E&SC BMP REMOVAL. INSTALL RIPARIAN BUFFER PLANTINGS PER THE RIPARIAN BUFFER PLANTING PLANS.
34. REMOVE AND PROPERLY DISPOSE OF/RECYCLE E&SC BMPS. REMOVE STAKES AND ORANGE CONSTRUCTION FENCE. REPAIR AND PERMANENTLY STABILIZE AREAS DISTURBED DURING E&SC BMP REMOVAL.

TEMPORARY AND PERMANENT STABILIZATION

1. TEMPORARY STABILIZATION

   TEMPORARY SEEDING WITH STRAW MULCH COVER FOR INTERIM STABILIZATION IS A TYPE OF BMP THAT CAN USUALLY BE PROVIDED WHERE THE EARTH DISTURBANCE ACTIVITY TEMPORARILY CEASES (I.E. 4 DAYS OR MORE) UNLESS DIRECTED BY THE PROJECT OWNER, PADEP, OR CONSERVATION DISTRICT.

   THE INSTALLATION OF AN EROSION CONTROL BLANKET OR APPLICATION OF STRAW MULCH UPON SEEDED CAN BE UTILIZED TO PROTECT THE SEEDBED UNTIL VEGETATION IS ESTABLISHED.

2. PERMANENT STABILIZATION

   UPON COMPLETION OF ANY EARTH DISTURBANCE ACTIVITY, THE SITE SHALL BE IMMEDIATELY SEEDED, MULCHED, OR OTHERWISE PROTECTED FROM ACCELERATED EROSION AND SEDIMENTATION.

   EROSION & SEDIMENTATION CONTROLS SHALL BE LEFT IN PLACE UNTIL SUCH TIME AS THE DISTURBED AREAS HAVE PERMANENT STABILIZATION. AN AREA SHALL BE CONSIDERED TO HAVE ACHIEVED FINAL STABILIZATION WHEN IT HAS A MINIMUM UNIFORM 70% PERENNIAL VEGETATIVE COVER OR OTHER PERMANENT NON-VEGETATIVE COVER WITH A DENSITY SUFFICIENT TO RESIST ACCELERATED SURFACE EROSION AND SUBSURFACE CHARACTERISTICS SUFFICIENT TO RESIST SLIDING AND OTHER MOVEMENTS.

   WHEN EROSION & SEDIMENTATION CONTROLS ARE TO BE REMOVED IN AGRICULTURAL NON-SENSITIVE AREAS (STREAMS/WETLANDS), AGRICULTURAL LANDOWNERS SHALL MAINTAIN AGRICULTURAL BMPS PER PADEP REGULATIONS.

3. STABILIZATION DURING NON-GROWING SEASONS

   WHEN UTILITY CONSTRUCTION MUST BE DONE AND IS COMPLETED DURING A NON-GROWING SEASON, INTERIM STABILIZATION BMPS MUST BE IMPLEMENTED AND ADEQUATELY MAINTAINED. THE APPLICATION OF STRAW MULCH AT THE RATE OF 3.0 TONS PER ACRE IS REQUIRED. THE BMPS SHOULD BE INSPECTED WEEKLY (UNLESS SNOW COVERED) AND AFTER EACH RUNOFF EVENT TO IDENTIFY AREAS THAT BECOME BARE.

   BARE AREAS SHOULD BE COVERED WITH A PROPERLY INSTALLED EROSION CONTROL BLANKET. ALL TEMPORARY EROSION AND SEDIMENT POLLUTION CONTROLS MUST BE MAINTAINED UNTIL PERMANENT VEGETATION IS ESTABLISHED.

4. WHERE REQUIRED, STRAW MULCH MUST BE APPLIED AT A MINIMUM OF 3.0 TONS PER ACRE.
5. STRAW MULCH SHALL BE APPLIED IN LONG STRANDS, NOT FINELY CHOPPED OR BROKEN.
6. PRIOR TO ANY SEEDING, LIME, OR FERTILIZATION APPLICATION, A SOIL TEST SHALL BE PERFORMED TO DETERMINE THE pH FACTOR. ADDITIONAL LIME AND FERTILIZER MAY BE REQUIRED. NO LIME OR FERTILIZERS SHALL BE USED IN WETLAND AREAS.
7. LIME, FERTILIZE, SEED, AND MULCH DISTURBED AREAS PER THE EROSION AND SEDIMENT CONTROL PLANS. IN AREAS OF STEEP SLOPES OR OBVIOUS AREAS WHERE POTENTIAL EROSION MAY OCCUR, AND EROSION CONTROL MAT OR FLEXIBLE GROWTH MEDIUM (FGM) SHALL BE USED. FGM SHALL BE APPLIED PER MANUFACTURER SPECIFICATIONS. NO LIME OR FERTILIZERS SHALL BE USED IN WETLAND OR STREAM AREAS.
8. WATERBARS WITHIN AGRICULTURAL OR RESIDENTIAL AREAS SHALL BE USED AS TEMPORARY FEATURES. WATERBARS MAY BE REMOVED WHEN THE TRIBUTARY DRAINAGE AREA IS AT LEAST 70% STABILIZED WITH PERENNIAL VEGETATION AS PER PA CHAPTER 102.22.

PIPELINE WORK SEQUENCE IN WETLANDS

FOR WORK IN WETLANDS, THE FOLLOWING STEPS SHALL BE INSERTED IN THE GENERAL PIPELINE CONSTRUCTION SEQUENCE ABOVE:

1. INSTALL ORANGE FLAGGING AROUND PERIMETER OF WETLAND AND SEDIMENT BARRIERS ALONG THE LIMITS OF DISTURBANCE.
2. LOCATE STAGING AREAS AT LEAST 50 FEET FROM THE EDGE OF THE WETLAND.
3. INSTALL SEDIMENT BARRIERS DOWN SLOPE OF THESE AREAS.
4. INSTALL CONSTRUCTION ENTRANCE AS SHOWN ON THE PLANS.
5. MATS, PADS, OR SIMILAR DEVICES SHALL BE USED DURING THE CROSSINGS OF WETLANDS. ORIGINAL GRADES THROUGH WETLANDS MUST BE RESTORED AFTER TRENCHING AND BACKFILLING. ANY EXCESS FILL MATERIALS MUST BE REMOVED FROM THE WETLAND AND NOT SPREAD ON-SITE.
6. SOIL EXCAVATED FROM WETLAND AREAS SHALL BE CAREFULLY REMOVED WITH THE ROOTS INTACT. THIS SOIL SHOULD BE PLACED IN A SEPARATE STOCKPILE TO BE REUSED DURING THE WETLAND SURFACE RESTITUTION.
7. DEWATER WORK AREA; WATER FROM THE EXCAVATION SHALL BE PUMPED TO A SEDIMENT TRAP OR A FILTER BAG.
8. INSTALL PIPE.
9. INSTALL TRENCH PLUGS IN WETLAND AREAS PER THE E&S PLAN TO PREVENT THE TRENCH FROM DRAINING THE WETLAND OR CHANGING ITS MICROHYDROLOGY.
10. BACKFILL PIPE TRENCH. BACKFILL THE TOP 12-INCHES OF THE EXCAVATED TRENCH WITH THE STOCKPILED WETLAND SOIL TO MATCH ORIGINAL SURFACE GRADES.
11. COMPACT BACKFILL AND GRADE THE SURFACE OF THE TRENCH AREA TO ALLOW FOR POSITIVE DRAINAGE TO SOIL E&SCS AND TO PREPARE DISTURBED AREAS FOR PERMANENT TRENCH RESTORATION.
12. MAINTAIN ALL E&SC DEVICES UNTIL SITE WORK IS COMPLETE AND A MINIMUM UNIFORM 70 PERCENT PERENNIAL VEGETATIVE COVER IS ESTABLISHED.
13. REMOVE ALL SOIL AND E&SC MEASURES UPON ESTABLISHMENT OF A MINIMUM UNIFORM 70 PERCENT PERENNIAL VEGETATIVE COVER OVER THE DISTURBED AREA REGRADE AND REVEGETATE AREAS DISTURBED DURING THE REMOVAL OF THE SOIL E&SCS.

PIPELINE WORK SEQUENCE AT STREAM CROSSINGS

FOR STREAM CROSSINGS, THE FOLLOWING STEPS SHALL BE INSERTED IN THE GENERAL PIPELINE CONSTRUCTION SEQUENCE ABOVE:

1. AFTER INSTALLATION OF SEDIMENTATION BMPS, INSTALL BYPASS HOSE, PUMP, OR COFFERDAM AS DESCRIBED IN STREAM CROSSING DETAILS AROUND THE WORK AREA.
2. DEWATER WORK AREA. WATER FROM THE EXCAVATION SHALL BE PUMPED TO A SEDIMENT FILTER BAG. WHERE POSSIBLE, EXCAVATION SHALL BE FROM THE TOP OF THE STREAM BANK.
3. STABILIZE CHANNEL EXCAVATION AND STREAM BANKS PRIOR TO REDIRECTING STREAM FLOW WITHIN 24 HOURS OF CROSSING BEING DONE FOR ALL STREAMS SMALLER THAN 10 FEET AND 48 HOURS FOR STREAMS LARGER THAN 10 FEET WIDE.
4. REMOVE BYPASS HOSE, PUMP, AND TEMPORARY DAM AS NEEDED.

MAINTENANCE PROGRAM

THE FOLLOWING INSPECTION AND MAINTENANCE PRACTICES WILL BE USED TO MAINTAIN EROSION AND SEDIMENT CONTROLS AND STABILIZATION MEASURES. REFER TO BMP DETAILS FOR SPECIFIC OPERATION AND MAINTENANCE REQUIREMENTS.

1. ALL EROSION AND SEDIMENT CONTROL MEASURES WILL BE INSPECTED ONCE EVERY SEVEN DAYS AND AFTER EACH RUNOFF EVENT. A WRITTEN REPORT MUST ALSO BE COMPLETED DOCUMENTING EACH INSPECTION AND, IF NECESSARY, ANY REPAIR, REPLACEMENT OR MAINTENANCE ACTIVITY.
2. ALL MEASURES WILL BE MAINTAINED IN GOOD WORKING ORDER; IF REPAIRS OR ADDITIONAL MEASURES ARE FOUND TO BE NECESSARY, THEY WILL BE INITIATED WITHIN 24 HOURS OF THE INSPECTION REPORT.
3. BUILT UP SEDIMENT WILL BE REMOVED FROM PERIMETER BMPS WHEN IT HAS REACHED ONE-THIRD THE HEIGHT OF THE BMP.
4. PERIMETER BMPS WILL BE INSPECTED FOR DEPTH OF SEDIMENT, DAMAGE, ETC., TO ENSURE THE MEASURE IS IN PROPER WORKING ORDER, AND THAT ANY POSTS/WOOD STAKES ARE SECURELY IN THE GROUND.
5. TEMPORARY SEDIMENT TRAPS, IF PRESENT, WILL BE INSPECTED FOR DEPTH OF SEDIMENT, AND BUILT UP SEDIMENT WILL BE REMOVED WHEN IT REACHES THE DESIGN CLEANOUT DEPTH.
6. TEMPORARY AND PERMANENT SEEDING, AND OTHER STABILIZATION MEASURES, WILL BE INSPECTED FOR BARE SPOTS, WASHOUTS, AND HEALTHY GROWTH.
7. A MAINTENANCE INSPECTION REPORT WILL BE MADE AFTER EACH INSPECTION. COPIES OF THE REPORT FORMS TO BE COMPLETED BY THE INSPECTOR ARE INCLUDED IN THIS ESCP.
8. THE INSPECTOR WILL IMPLEMENT INSPECTION AND MAINTENANCE PRACTICES NECESSARY FOR KEEPING THE EROSION AND SEDIMENT CONTROLS THAT ARE USED ON THE SITE IN GOOD WORKING ORDER. THE INSPECTOR WILL ALSO BE TRAINED IN THE COMPLETION OF, INITIATION OF ACTIONS REQUIRED BY, AND THE FILING OF THE INSPECTION FORMS.
9. DISTURBED AREAS AND MATERIALS STORAGE AREAS WILL BE INSPECTED FOR EVIDENCE OF OR POTENTIAL FOR POLLUTANTS ENTERING THE STORMWATER.

A COPY OF THE APPROVED EROSION AND SEDIMENT CONTROL PLAN(S) WILL BE AVAILABLE ON THE SITE AT ALL TIMES.

ONCE ANY EROSION CONTROL MEASURES ARE INSTALLED, THE MAINTENANCE AND INSPECTION PROCEDURES ABOVE SHALL BEGIN. THE CONTRACTOR SHOULD BE AWARE THAT THE INSPECTION FORMS BECOME AN INTEGRAL PART OF THE ESCP AND SHALL BE MADE READILY AVAILABLE TO THE GOVERNMENT INSPECTION OFFICIALS, THE PROJECT OWNER'S ENGINEER, AND THE PROJECT OWNER FOR REVIEW UPON REQUEST DURING VISITS TO THE PROJECT SITE.

INSPECTORS SHOULD BE KNOWLEDGEABLE IN THE PRINCIPLES AND PRACTICE OF EROSION AND SEDIMENT CONTROLS AND POSSESS THE SKILLS TO ASSESS CONDITIONS AT THE CONSTRUCTION SITE THAT COULD IMPACT STORMWATER QUALITY AND TO ASSESS THE EFFECTIVENESS OF ANY SEDIMENT AND EROSION CONTROL MEASURES SELECTED TO CONTROL THE QUALITY OF STORMWATER DISCHARGES FROM THE CONSTRUCTION SITE. THEY SHOULD ALSO HAVE READ AND UNDERSTOOD ALL PORTIONS OF THIS ESCP, INCLUDING THE ESCGP-2.

THE INDIVIDUAL(S) RESPONSIBLE FOR POST-STORM AND STORM EVENT BMP INSPECTIONS, AND THE QUALIFIED PERSON(S) ASSIGNED RESPONSIBILITY TO ENSURE FULL COMPLIANCE WITH THE PERMIT AND IMPLEMENTATION OF ALL ELEMENTS OF THE ESCP, INCLUDING THE PREPARATION OF THE ANNUAL COMPLIANCE EVALUATION AND THE ELIMINATION OF ALL UNAUTHORIZED DISCHARGES ARE:

NAME: _____

PHONE NUMBER: _____ EMERGENCY PHONE #: _____

COMPANY: _____

RESPONSIBILITIES: _____

NAME: _____

PHONE NUMBER: _____ EMERGENCY PHONE #: _____

COMPANY: _____

RESPONSIBILITIES: _____

ACCESS ROAD BMP INSTALLATION SEQUENCE

REFER TO SPECIFIC ACCESS ROAD CONSTRUCTION SEQUENCE NOTES INCLUDED IN THE ACCESS ROAD E&S PLAN SETS UNDER SEPARATE COVER.

ACID-PRODUCING SOILS AND BEDROCK CONTROL PLAN

THE FOLLOWING ACID PRODUCING SOILS CONTROL PLAN WAS DEVELOPED TO IDENTIFY BMPS AND PROCEDURES FOR MINIMIZING THE POTENTIAL FOR POLLUTION ASSOCIATED WITH THE DISTURBANCE OF THE AREAS WITHIN THE PROPOSED RIGHT-OF-WAY THAT CONTAIN ACID-PRODUCING SOILS WITH A pH LESS THAN 4.0.

ACID-PRODUCING SOILS AND BEDROCK CONTROL PLAN:

1. CONTRACTOR SHALL LIMIT THE EXCAVATION AREA AND EXPOSURE TIME WHEN HIGH ACID-PRODUCING SOILS ARE ENCOUNTERED. LOCATIONS WHERE ACIDIC SOILS ARE ANTICIPATED TO BE PRESENT ALONG THE PIPELINE CORRIDOR ARE PROVIDED IN THE COUNTY-SPECIFIC TABLE INCLUDED AT THE END OF THIS PLAN SET.
2. CONTRACTOR SHALL SEPARATELY STORE TOPSOIL STRIPPED FROM THE SITE AWAY FROM TEMPORARILY STOCKPILED HIGH ACID-PRODUCING SOILS AND BEDROCK.S.
3. CONTRACTOR SHALL STOCKPILE HIGH ACID-PRODUCING SOILS AND BEDROCK MATERIAL ON LEVEL GROUND TO MINIMIZE ITS MOVEMENT, ESPECIALLY WHEN THESE MATERIALS HAVE A HIGH CLAY CONTENT.
4. CONTRACTOR SHALL COVER TEMPORARILY STOCKPILED HIGH ACID-PRODUCING SOIL AND BEDROCK MATERIAL TO BE EXPOSED MORE THAN 7 DAYS WITH PROPERLY ANCHORED, HEAVY-GRATE SHEETS OF POLYETHYLENE, WHERE POSSIBLE. IF NOT POSSIBLE, STOCKPILES SHALL BE COVERED WITH A MINIMUM OF THREE TO SIX INCHES OF WOOD CHIPS TO MINIMIZE EROSION OF THE STOCKPILE. IN ADDITION, THE CONTRACTOR SHALL INSTALL SILT FENCE AT THE TOE OF THE STOCKPILE SLOPE TO CONTAIN MOVEMENT OF MATERIAL. CONTRACTOR SHALL NOT APPLY TOPSOIL TO THE HIGH ACID-PRODUCING SOIL OR BEDROCK STOCKPILES TO PREVENT TOPSOIL CONTAMINATION.
5. CONTRACTOR SHALL ULTIMATELY DISPOSE OF HIGH ACID-PRODUCING SOILS OR BEDROCK WITH A pH OF FOUR OR LESS, OR CONTAINING IRON SULFIDE (INCLUDING BORROW FROM CUTS) BY PLACING THE MATERIAL COMBINED WITH LIMESTONE AT THE RATE OF 6 TONS PER ACRE (OR 275 POUNDS PER 1,000 SQUARE FEET OF SURFACE AREA) AND COVERING THE MIXTURE WITH A MINIMUM OF 12 INCHES OF SETTLED SOILS WITH A PH OF FIVE OR MORE EXCEPT AS FOLLOWS:
   A. IN THE AREAS WHERE TREES OF SHRUBS ARE TO BE PLANTED, THE CONTRACTOR SHALL COVER THE LIMESTONE/SOIL MIXTURE WITH A MINIMUM OF 24 INCHES OF SOILS WITH A PH OF FIVE OR MORE.
   B. CONTRACTOR SHALL NOT LOCATE ANY DISPOSAL AREA WITHIN 24 INCHES OF ANY SURFACE OF A SLOPE OR BANK, SUCH AS BERMS, STREAM BANKS, DITCHES, AND OTHER SURFACE WATERS TO PREVENT POTENTIAL LATERAL LEACHING DAMAGES.
6. AT THE END OF EACH DAY, CONTRACTOR SHALL CLEAN ALL EQUIPMENT USED TO HANDLE HIGH ACID-PRODUCING SOILS OR BEDROCK TO PREVENT SPREADING OF HIGH-ACID MATERIALS TO OTHER PARTS OF THE PROPOSED RIGHT-OF-WAY, INTO STREAMS, OR STORMWATER CONVEYANCES, AND TO PROTECT MACHINERY FROM ACCELERATED CORROSION.
7. CONTRACTOR SHALL PROVIDE AND INSTALL NON-VEGETATIVE EROSION CONTROLS (STONE TRACKING PADS, STRATEGICALLY-PLACE LIMESTONE CHECK DAMS, SILT FENCES, WOOD CHIPS) TO LIMIT THE MOVEMENT OF HIGH ACID-PRODUCING SOILS FROM, AROUND, OR OFF OF THE PROPOSED RIGHT-OF-WAY.
8. FOLLOWING THE BURIAL OR REMOVAL OF HIGH ACID-PRODUCING SOILS AND BEDROCK, TOP SOILING, AND SEEDING OF THE PROPOSED RIGHT-OF-WAY, TRANSCO SHALL MONITOR THE SITE FOR APPROXIMATELY SIX TO 12 MONTHS TO ASSURE THERE IS ADEQUATE STABILIZATION AND THAT NO HIGH-ACID SOIL OR BEDROCK PROBLEMS EMERGE. CONTRACTOR SHALL CORRECT ANY PROBLEMS THAT ARE DISCOVERED WITHIN THIS TIME PERIOD.
9. IF PROBLEMS OCCUR WHERE HIGH ACID-PRODUCING SOILS OR BEDROCK HAVE BEEN PLACED OR BURIED, THE APPLICANT SHALL MONITOR THESE AREAS FOR AT LEAST TWO YEARS TO ASSURE THERE IS NO MIGRATION OF POTENTIAL ACID LEACHATE.

AGRIGULTURAL EROSION & SEDIMENT CONTROL NOTES

1. PER PA CHAPTER 102 REGULATIONS, ALL FARMS ARE REQUIRED TO DEVELOP AND IMPLEMENT A WRITTEN PLAN TO REDUCE EROSION WHEN PLOWING AND TILLING (INCLUDES NO-TILL CROPPING).
2. AREAS WITHIN 100-FT OF A STREAM MUST MAINTAIN A MINIMUM OF 25% PLANT COVER OR CROP RESIDUE.
3. ADDITIONAL BMP'S MAY BE NEEDED TO MINIMIZE ACCELERATED EROSION AND SEDIMENTATION FOR FIELDS WITH LESS THAN 25% PLANT COVER OR CROP RESIDUE COVER AND WITHIN 100-FT OF A RIVER OR PERENNIAL OR INTERMITTENT STREAM.

RIPARIAN BUFFER REPLANTING NOTES

1. PIPELINE CONSTRUCTION AREAS THAT ENCROACH THE RIPARIAN BUFFER SHALL BE SEEDED WITH THE RIPARIAN BUFFER MIX ERNMX-178 AS SHOWN ON SHEET 3 OF 3 OF THIS PLAN SET AND PLANTED WITH SHRUBS PER THE "RIPARIAN AREA IMPACT ASSESSMENT AND RESTORATION PLAN"INCLUDED THE EROSION AND SEDIMENT CONTROL PLAN NARRATIVE"FOR EACH COUNTY (UNDER SEPARATE COVER).

COMMONWEALTH OF PENNSYLVANIA REGISTERED PROFESSIONAL ENGINEER SUZANNE MARIE KING PE082757

SUZANNE KING REG NO. PE 082757

BL Companies — ARCHITECTURE ENGINEERING ENVIRONMENTAL LAND SURVEYING

REVISIONS

NO.	DATE	BY	DESCRIPTION	W.O. NO.	CHK.	APP.
0	08/28/2015	BL	ISSUED FOR PADEP SUBMITTAL	W0572385	JLK	SMK
1	12/02/2015	BL	ISSUED FOR PADEP RESUBMITTAL	W0572385	JLK	SMK
2	Oct. 2016	BL	PADEP TECHNICAL DEFICIENCY RESPONSE #1	W0572385	JLK	SMK
3	April 2017	BL	PADEP TECHNICAL DEFICIENCY RESPONSE #2	W0572385	JLK	SMK
4	AUG. 2017	BL	PADEP TECHNICAL DEFICIENCY RESPONSE #3	W0572385	JLK	AJB

TRANSCONTINENTAL GAS PIPE LINE COMPANY, LLC

ATLANTIC SUNRISE PROJECT

PENNSYLVANIA BEST MANAGEMENT PRACTICES AND QUANTITIES PLAN SET

Williams GAS PIPELINE

GENERAL NOTES

DRAWN BY: ELZ	DATE: 05/15/15	ISSUED FOR BID:		SCALE:	
CHECKED BY: JLK	DATE: 07/02/15	ISSUED FOR CONSTRUCTION:		REVISION: 4	
APPROVED BY: SMK	DATE: 07/08/15	DRAWING NUMBER: ASR-BMP-GN		SHEET 2 OF 3	
WO:					

Drawn By & Date/Time: TDelo Jul 28, 2017 - 12:07pm
Drawing Location & Name: G:\JOBS14\14C\14C4909\DWG\BMP&DETAILS\PL_DN14C4909(02)_NOTES-02-03.dwg

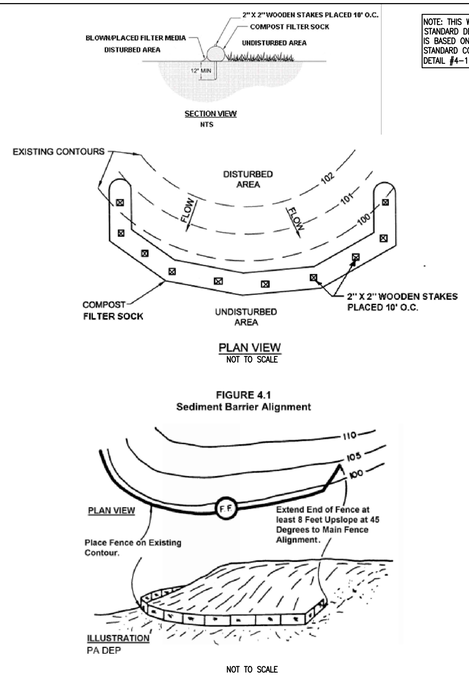

NOTE: THIS WILLIAMS STANDARD DETAIL IS BASED ON PADEP STANDARD CONSTRUCTION DETAIL #4-1.

FIGURE 4.1
Sediment Barrier Alignment

NO.	DATE	BY	REVISION DESCRIPTION	W.O. NO.	CHK.	APP.

TRANSCONTINENTAL GAS PIPE LINE COMPANY, LLC
STANDARD ENVIRONMENTAL DETAIL
CFS COMPOST FILTER SOCK
Williams

1 OF 3

TABLE 4.1
COMPOST SOCK FABRIC MINIMUM SPECIFICATIONS

Material Type	3 mil HDPE	5 mil HDPE	5 mil HDPE	Multi-Filament Polypropylene (MFPP)	Heavy Duty Multi-Filament Polypropylene (HDMFPP)
Material Characteristics	Photo-degradable	Photo-degradable	Bio-degradable	Photo-degradable	Photo-degradable
Sock Diameters	12" 18"	12" 18" 24" 32"	12" 18" 24" 32"	12" 18" 24" 32"	12" 18" 24" 32"
Mesh Opening	3/8"	3/8"	3/8"	3/8"	1/8"
Tensile Strength		25 psi	25 psi	44 psi	202 psi
Ultraviolet Stability % Original Strength (ASTM G-155)	23% at 1000 hr.	23% at 1000 hr.		100% at 1000 hr.	100% at 1000 hr.
Minimum Functional Longevity	6 months	9 months	6 months	1 year	2 years
Two-ply systems					
Inner Containment Netting	HDPE biaxial net Continuously wound Fusion-welded junctures 3/4" X 3/4" Max. aperture size				
Outer Filtration Mesh	Composite Polypropylene Fabric (Woven layer and non-woven fleece mechanically fused via needle punch) 3/16" Max. aperture size				
Sock fabrics composed of burlap may be used on projects lasting 6 months or less.					

TABLE 4.2
COMPOST STANDARDS

ORGANIC MATTER CONTENT	25%–100% (DRY WEIGHT BASIS)
ORGANIC PORTION	FIBROUS AND ELONGATED
pH	5.5 – 8.5
MOISTURE CONTENT	30% – 60%
PARTICLE SIZE	30%–50% PASS THROUGH 3/8" SIEVE
SOLUBLE SALT CONCENTRATION	5.0 DS/M (MMHOS/CM) MAXIMUM

NOTES:

1. SOCK FABRIC SHALL MEET STANDARDS OF TABLE 4.1. COMPOST SHALL MEET THE STANDARDS OF TABLE 4.2. (SEE SHEET 2 OF 3 OF THIS DETAIL.)
2. COMPOST FILTER SOCK SHALL BE PLACED AT EXISTING LEVEL GRADE. BOTH ENDS OF THE SOCK SHALL BE EXTENDED AT LEAST 8 FEET UP SLOPE AT 45 DEGREES TO THE MAIN SOCK ALIGNMENT. MAXIMUM SLOPE LENGTH ABOVE ANY SOCK SHALL NOT EXCEED THAT SHOWN ON FIGURE 4.2. (SEE SHEET 3 OF 3 OF THIS DETAIL). STAKES MAY BE INSTALLED IMMEDIATELY DOWNSLOPE OF THE SOCK IF SO SPECIFIED BY THE MANUFACTURER.
3. TRAFFIC SHALL NOT BE PERMITTED TO CROSS COMPOST FILTER SOCKS.
4. ACCUMULATED SEDIMENT SHALL BE REMOVED WHEN IT REACHES HALF THE ABOVEGROUND HEIGHT OF THE SOCK AND DISPOSED IN THE MANNER DESCRIBED ELSEWHERE IN THE PLAN.
5. SOCKS SHALL BE INSPECTED WEEKLY AND AFTER EACH RUNOFF EVENT. DAMAGED SOCKS SHALL BE REPAIRED ACCORDING TO MANUFACTURER'S SPECIFICATIONS OR REPLACED WITHIN 24 HOURS OF INSPECTION.
6. BIODEGRADABLE FILTER SOCKS SHALL BE REPLACED AFTER 6 MONTHS; PHOTODEGRADABLE SOCKS AFTER 1 YEAR. POLYPROPYLENE SOCKS SHALL BE REPLACED ACCORDING TO MANUFACTURER'S RECOMMENDATIONS.
7. UPON STABILIZATION OF THE AREA TRIBUTARY TO THE SOCK, STAKES SHALL BE REMOVED. THE SOCK MAY BE LEFT IN PLACE AND VEGETATED OR REMOVED. IN THE LATTER CASE, THE MESH SHALL BE CUT OPEN AND THE MULCH SPREAD AS A SOIL SUPPLEMENT.
8. SOCKS SHALL BE INSTALLED PARALLEL TO THE CONTOURS, TYPICALLY. IN AREAS WHERE THE SLOPE OF THE CATCHMENT AREA IS LESS THAN FIVE PERCENT, THE SOCKS MAY BE INSTALLED AS NECESSARY TO MINIMIZE THE NUMBER OF SEPARATE SOCK SEGMENTS ALONG THE EDGE OF DISTURBANCE.

NO.	DATE	BY	REVISION DESCRIPTION	W.O. NO.	CHK.	APP.

TRANSCONTINENTAL GAS PIPE LINE COMPANY, LLC
STANDARD ENVIRONMENTAL DETAIL
CFS COMPOST FILTER SOCK
Williams

2 OF 3

FIGURE 4.2
MAXIMUM PERMISSIBLE SLOPE LENGTH ABOVE COMPOST FILTER SOCKS

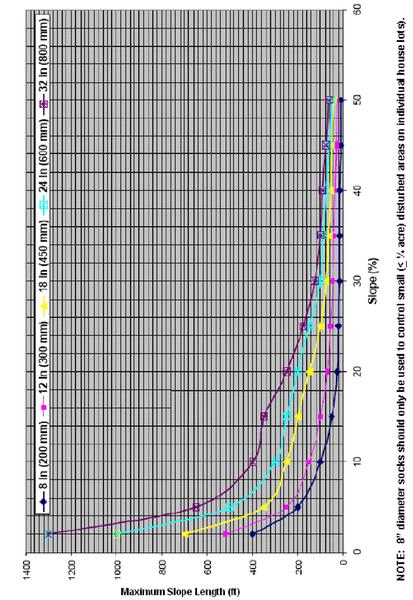

Adapted from Filtrexx

NOTE: 8" diameter socks should only be used to control small (≤ ¼ acre) disturbed areas on individual house lots).

NO.	DATE	BY	REVISION DESCRIPTION	W.O. NO.	CHK.	APP.

TRANSCONTINENTAL GAS PIPE LINE COMPANY, LLC
STANDARD ENVIRONMENTAL DETAIL
CFS COMPOST FILTER SOCK
Williams

3 OF 3

THIS DETAIL IS NOT UTILIZED IN THIS COUNTY

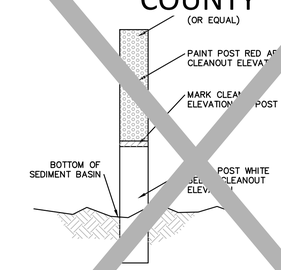

NO.	DATE	BY	REVISION DESCRIPTION	W.O. NO.	CHK.	APP.

TRANSCONTINENTAL GAS PIPE LINE COMPANY, LLC
STANDARD ENVIRONMENTAL DETAIL
CS CLEANOUT STAKE
Williams

NOTE: THIS WILLIAMS STANDARD DETAIL IS BASED ON PADEP STANDARD CONSTRUCTION DETAIL #3-11.

THIS DETAIL IS NOT UTILIZED IN THIS COUNTY

NOTES:

1. SEE COMPOST FILTER SOCK (CFS) DETAIL FOR MORE INFORMATION. SOCK MATERIAL SHALL MEET THE STANDARDS OF TABLE 4.1. COMPOST SHALL MEET THE STANDARDS OF TABLE 4.2.
2. COMPOST SOCK SEDIMENT TRAPS SHALL NOT EXCEED THREE SOCKS IN HEIGHT AND SHALL BE STACKED IN PYRAMIDAL FORM AS SHOWN ABOVE. MINIMUM TRAP HEIGHT IS ONE 24" DIAMETER SOCK. ADDITIONAL STORAGE MAY BE PROVIDED BY MEANS OF AN EXCAVATED SUMP 12" DEEP EXTENDING 1 TO 3 FEET UPSLOPE OF THE SOCK ALONG THE LOWER SIDE OF THE TRAP.
3. THE MAXIMUM TRIBUTARY DRAINAGE AREA IS 5.0 ACRES. SINCE COMPOST SOCKS ARE "FLOW-THROUGH," NO SPILLWAY IS REQUIRED.
4. COMPOST SOCK SEDIMENT TRAPS SHALL BE INSPECTED WEEKLY AND AFTER EACH RUNOFF EVENT. SEDIMENT SHALL BE REMOVED WHEN IT REACHES 1/3 THE HEIGHT OF THE SOCKS.
5. PHOTODEGRADABLE AND BIODEGRADABLE SOCKS SHALL NOT BE USED FOR MORE THAN 1 YEAR.
6. DESIGN NOTES:
   A. COMPOST SOCK SEDIMENT TRAP SHALL BE SIZED TO PROVIDE 2,000 CUBIC FEET OF STORAGE CAPACITY AND 12" FREEBOARD FOR EACH ACRE TRIBUTARY TO THE TRAP.
   B. MINIMUM BASE WIDTH IS EQUIVALENT TO THE HEIGHT.
   C. SEDIMENT ACCUMULATION SHALL NOT EXCEED 1/3 THE TOTAL HEIGHT OF THE TRAP.
   D. SOCKS SHALL BE OF LARGER DIAMETER AT THE BASE OF THE TRAP AND DECREASE IN DIAMETER FOR SUCCESSIVE LAYERS AS INDICATED TO THE LEFT.
   E. ENDS OF THE TRAP SHALL BE A MINIMUM OF 1 FOOT HIGHER IN ELEVATION THAN THE MID-SECTION, WHICH SHALL BE LOCATED AT THE POINT OF DISCHARGE.

NO.	DATE	BY	REVISION DESCRIPTION	W.O. NO.	CHK.	APP.

TRANSCONTINENTAL GAS PIPE LINE COMPANY, LLC
STANDARD ENVIRONMENTAL DETAIL
CST COMPOST SOCK SEDIMENT TRAP
Williams

REFER TO THE QUANTITY, CROSSING AND ACIDIC SOIL TABLES FOR DETAIL AND DESIGN

NO.	DATE	BY	REVISION DESCRIPTION	W.O. NO.	CHK.	APP.

TRANSCONTINENTAL GAS PIPE LINE COMPANY LLC
STANDARD ENVIRONMENTAL DETAIL
CWC CLEAN WATER CROSSING
Williams

COMMONWEALTH OF PENNSYLVANIA
REGISTERED PROFESSIONAL
SUZANNE MARIE KING
ENGINEER
PE082757

SUZANNE KING REG NO. PE 082757

BL Companies
ARCHITECTURE ENGINEERING ENVIRONMENTAL LAND SURVEYING

REVISIONS

NO.	DATE	BY	DESCRIPTION	W.O. NO.	CHK.	APP.
0	08/28/2015	BL	ISSUED FOR PADEP SUBMITTAL	W0572385	JLK	SMK
1	12/02/2015	BL	ISSUED FOR PADEP RESUBMITTAL	W0572385	JLK	SMK
2	Oct. 2016	BL	PADEP TECHNICAL DEFICIENCY RESPONSE #1	W0572385	JLK	SMK
3	April 2017	BL	PADEP TECHNICAL DEFICIENCY RESPONSE #2	W0572385	JLK	SMK
4	AUG. 2017	BL	PADEP TECHNICAL DEFICIENCY RESPONSE #3	W0572385	JLK	SMK

TRANSCONTINENTAL GAS PIPE LINE COMPANY, LLC
ATLANTIC SUNRISE PROJECT

BEST MANAGEMENT PRACTICES AND QUANTITIES PLAN SET

BEST MANAGEMENT PRACTICES DETAILS

Williams GAS PIPELINE

DRAWN BY:	ELZ	DATE: 05/15/15	ISSUED FOR BID:	SCALE:	
CHECKED BY:	JLK	DATE: 07/02/15	ISSUED FOR CONSTRUCTION:	REVISION:	4
APPROVED BY:	SMK	DATE: 07/08/15	DRAWING NUMBER: ASR-BMP	SHEET	2
WO:				OF	11

Drawn By & Date/Time: CScanzello Jul 27, 2017 – 4:23pm
Drawing Location & Name: G:\JOBS\14\14C\14C4909\DWG\BMPs&DETAILS\PL_DN14C4909(10)_SU-BMP-02.dwg

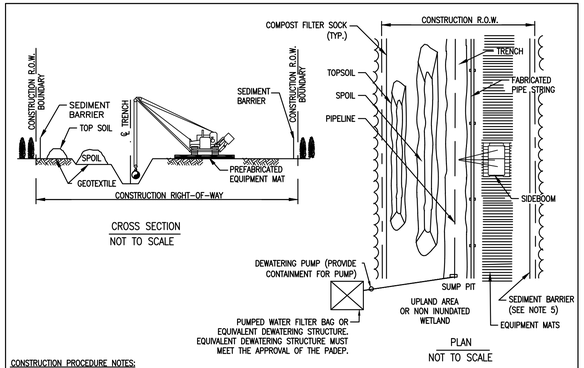

CROSS SECTION
NOT TO SCALE

PLAN
NOT TO SCALE

CONSTRUCTION PROCEDURE NOTES:

1. FLAG WETLAND BOUNDARIES AND INSTALL BOUNDARY SIGNS PRIOR TO CLEARING.
2. NO OVERNIGHT PARKING OR REFUELING OF MOBILE EQUIPMENT IS ALLOWED WITHIN 100 FEET OF WETLAND. PLACE "NO FUELING" SIGN POSTS 100 FEET BACK FROM WETLAND BOUNDARY.
3. INSTALL TEMPORARY SLOPE BREAKERS UPSLOPE OF WETLAND BOUNDARIES AS SHOWN ON DRAWINGS AND SPECIFICATIONS.
4. INSTALL PREFABRICATED EQUIPMENT MATS THROUGH ENTIRE WETLAND AREA ON THE WORKING SIDE OF THE CONSTRUCTION CORRIDOR.
5. AVOID ADJACENT WETLANDS. INSTALL SEDIMENT BARRIERS AT OUTER BOUNDARIES OF THE WETLAND AND ALONG BOTH WETLAND EDGES. INSTALL SEDIMENT BARRIERS ALONG THE EDGE OF THE SPOIL SIDE OF THE CONSTRUCTION CORRIDOR THROUGH THE WETLAND AND ALONG THE DOWN SLOPE EDGE OF THE WETLAND. IF THE DOWN SLOPE EDGE OF THE WETLAND IS THE SPOIL SIDE, THEN SEDIMENT BARRIERS ARE NOT REQUIRED ON THE WORKING SIDE OF THE CORRIDOR UNLESS EQUIPMENT TRAVERSING THROUGH THE WETLAND CAUSES SPOIL AND SEDIMENT TO EXIT THE CONSTRUCTION CORRIDOR.
6. LIMIT PULLING OF TREE STUMPS AND GRADING ACTIVITIES TO DIRECTLY OVER THE TRENCH LINE. DO NOT GRADE OR REMOVE STUMPS OR ROOT SYSTEMS FROM THE REST OF THE RIGHT-OF-WAY IN WETLANDS UNLESS THE CHIEF INSPECTOR AND ENVIRONMENTAL INSPECTOR DETERMINE THAT SAFETY RELATED CONSTRUCTION CONSTRAINTS REQUIRE REMOVAL OF TREE STUMPS FROM UNDER THE WORKING SIDE OF THE RIGHT-OF-WAY.
7. CONDUCT TRENCH LINE TOPSOIL STRIPPING (IF TOPSOIL IS NOT SATURATED). SALVAGE TOPSOIL TO ACTUAL DEPTH OR A MAXIMUM DEPTH OF 12 INCHES, AS DETERMINED BY THE ENVIRONMENTAL INSPECTOR. SEGREGATED TOPSOIL PILE MAY BE LOCATED ON SPOIL SIDE, AS REQUIRED.
8. LEAVE HARD PLUGS AT THE EDGES OF WETLAND UNTIL JUST PRIOR TO TRENCHING.
9. TRENCHING THROUGH WETLANDS MAY PROCEED WHEN THE PIPE SECTION IS FABRICATED AND READY TO LAY. ONCE TRENCHING COMMENCES, CONSTRUCTION THROUGH THE WETLAND IS TO PROCEED CONTINUOUSLY UNTIL THE CROSSING IS COMPLETED, BACK FILLED AND RESTORED IN ORDER TO MINIMIZE THE LENGTH OF TIME THE TRENCH IS OPEN.
10. PIPE SECTION MAY BE FABRICATED WITHIN THE WETLAND ADJACENT TO PIPE TRENCH, OR IN STAGING AREA OUTSIDE THE WETLAND AND WALKED IN. NO CONCRETE COATING ACTIVITY WITHIN 100 FEET OF WETLAND BOUNDARY UNLESS APPROVED BY ENVIRONMENTAL INSPECTOR.
11. LOWER-IN PIPE. PRIOR TO BACK FILLING TRENCH, INSTALL TRENCH PLUGS IN ACCORDANCE WITH DRAWINGS AND SPECIFICATIONS.
12. RESTORE GRADE TO NEAR PRE-CONSTRUCTION TOPOGRAPHY, REPLACE TOPSOIL AND INSTALL PERMANENT EROSION CONTROL.
13. REMOVE PREFABRICATED MATS FROM WETLANDS UPON COMPLETION.
14. IF WETLAND IS SATURATED, THE TOPSOIL STOCKPILE SHALL NOT OCCUR AS SHOWN IN DETAIL.
15. EROSION CONTROL BLANKETS SHALL BE INSTALLED WITHIN 50' OF A NON-HQ/EV WETLAND OR STREAM AND 100' OF A HQ/EV WETLAND OR STREAM.

NO.	DATE	BY	REVISION DESCRIPTION	W.O. NO.	CHK.	APP.

TRANSCONTINENTAL GAS PIPE LINE COMPANY, LLC
STANDARD ENVIRONMENTAL DETAIL

WCC.1 WETLAND INSTALLATION PROCEDURE

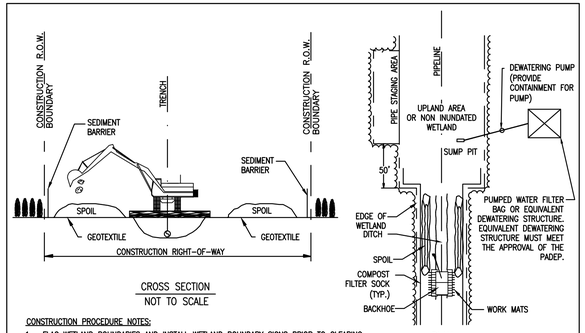

CROSS SECTION
NOT TO SCALE

PLAN
NOT TO SCALE

CONSTRUCTION PROCEDURE NOTES:

1. FLAG WETLAND BOUNDARIES AND INSTALL WETLAND BOUNDARY SIGNS PRIOR TO CLEARING.
2. NO OVERNIGHT PARKING OR REFUELING OF MOBILE EQUIPMENT IS ALLOWED WITHIN 100 FEET OF WETLAND. PLACE "NO FUELING" SIGN POSTS 100 FEET BACK FROM WETLAND BOUNDARY.
3. INSTALL TEMPORARY SLOPE BREAKERS UPSLOPE OF WETLAND BOUNDARIES AS SHOWN ON DRAWINGS AND SPECIFICATIONS.
4. AVOID ADJACENT WETLANDS. INSTALL SEDIMENT BARRIERS AT OUTER BOUNDARIES OF WETLAND AND ALONG BOTH WETLAND EDGES.
5. LIMIT PULLING OF TREE STUMPS AND GRADING ACTIVITIES TO DIRECTLY OVER TRENCH LINE. DO NOT GRADE OR REMOVE STUMPS OR ROOT SYSTEMS FROM THE REST OF THE RIGHT-OF-WAY IN WETLANDS UNLESS THE CHIEF INSPECTOR AND ENVIRONMENTAL INSPECTOR DETERMINE THAT SAFETY RELATED CONSTRUCTION CONSTRAINTS REQUIRE REMOVAL OF TREE STUMPS FROM UNDER THE WORKING SIDE OF THE RIGHT-OF-WAY.
6. TOPSOIL STRIPPING SHALL NOT BE REQUIRED IN SATURATED SOIL CONDITIONS.
7. UTILIZE AMPHIBIOUS EXCAVATORS (PONTOON MOUNTED BACKHOES) OR TRACKED BACKHOES SUPPORTED BY PREFABRICATED EQUIPMENT MATS OR FLOATS, TO EXCAVATE TRENCH. IF PREFABRICATED EQUIPMENT MATS ARE USED FOR STABILIZATION, THE BACKHOE SHALL GRADUALLY MOVE ACROSS THE WETLAND BY MOVING THE MATS FROM IMMEDIATELY BEHIND TO IMMEDIATELY IN FRONT OF THE BACKHOE'S PATH.
8. FABRICATE PIPE IN A STAGING AREA OUTSIDE THE TYPE III WETLAND. NO CONCRETE COATING ACTIVITY WITHIN 100 FEET OF WETLAND BOUNDARY, UNLESS APPROVED BY ENVIRONMENTAL INSPECTOR.
9. LEAVE HARD PLUGS AT THE EDGE OF "INUNDATED WETLAND UNTIL JUST PRIOR TO PIPE PLACEMENT.
10. FLOAT PIPE IN PLACE, LOWER-IN, INSTALL TRENCH PLUGS. AND BACKFILL.
11. RESTORE GRADE TO NEAR PRE-CONSTRUCTION TOPOGRAPHY AND INSTALL PERMANENT EROSION CONTROL.
12. REMOVE ANY MATS UTILIZED TO SUPPORT AMPHIBIOUS EQUIPMENT FROM WETLANDS UPON COMPLETION.
13. WETLANDS CROSSED USING PUSH/PULL METHOD TEND TO BE TOO WET FOR EFFECTIVE SEEDING. HOWEVER, IF THE SITE IS DRY ENOUGH AND IF DIRECTED BY THE ENVIRONMENTAL INSPECTOR, THE RIGHT-OF-WAY SHALL BE SEEDED.
14. EROSION CONTROL BLANKETS SHALL BE INSTALLED WITHIN 50' OF A NON-HQ/EV WETLAND OR STREAM AND 100' OF A HQ/EV WETLAND OR STREAM.

NO.	DATE	BY	REVISION DESCRIPTION	W.O. NO.	CHK.	APP.

TRANSCONTINENTAL GAS PIPE LINE COMPANY, LLC
STANDARD ENVIRONMENTAL DETAIL

WCC.3 "INUNDATED WETLAND" INSTALLATION PROCEDURE

NOTE: THIS WILLIAMS STANDARD DETAIL IS BASED ON PADEP STANDARD CONSTRUCTION DETAIL #3-9.

THIS DETAIL IS NOT UTILIZED IN THIS COUNTY

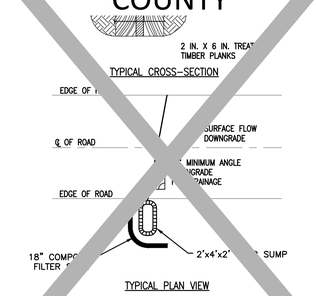

NOTES:

1. DEFLECTOR SHALL BE USED ON TEMPORARY ACCESS ROADS WITH SLOPES GREATER TH PERCENT. MAXIMUM DEFLECT ACING SHALL BE 100 FEET.
2. DEF K SHALL BE INSPECTED WEEKLY AND AFTER EACH RUNOFF EVENT.
3. ULATED SEDIMENT SHALL BE REMOVED FROM DEFLECTOR WITHIN 24 HOURS OF INSPECTION.
4. ELT SHALL BE REPLACED WHEN WORN AND NO LONGER EFFECTIVE.
5. ***INSTALL A 2' WIDE BY 4' LONG BY 2' DEEP SUMP AND 18" COMPOST FILTER SOCK ON THE DOWNHILL SI THE WATER DEFLECTOR. THE ORIENTATION OF THE COMPOST FILTER SOCK WILL VARY BASED ON THE EXISTING GROUND ELEVATION. INSTALL THE COMPOST FILTER SOCK PARALLEL TO EXISTING CONTOURS.***

NO.	DATE	BY	REVISION DESCRIPTION	W.O. NO.	CHK.	APP.

TRANSCONTINENTAL GAS PIPE LINE COMPANY, LLC
STANDARD ENVIRONMENTAL DETAIL

WD WATER DEFLECTOR

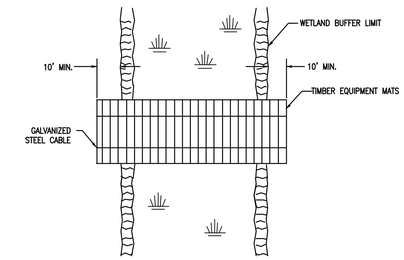

PLAN
NOT TO SCALE

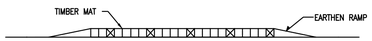

PROFILE
NOT TO SCALE

NOTES:

1. PERIODICALLY CHECK INSTALLATION AND REMOVE BUILD-UP OF SEDIMENT OR DEBRIS.
2. MATERIALS PLACED IN WETLANDS SHALL BE COMPLETELY REMOVED DURING FINAL CLEAN-UP. REMOVAL OF THIS STRUCTURE IS NOT CONTINGENT UPON ESTABLISHMENT OF PERMANENT VEGETATION.
3. IF A WATERBODY IS LOCATED WITHIN A WETLAND SYSTEM, EXTEND TIMBER EQUIPMENT MATS TO THE BRIDGE EQUIPMENT CROSSING (BEC) USED TO CROSS THE WATERBODY IN ORDER TO ALLOW FOR CONTINUOUS TIMBER EQUIPMENT MAT COVERAGE THROUGH THE WETLAND AND WATERBODY AREA.
4. USE ADDITIONAL TIMBER MAT LAYERS TO RAISE CROSSING ABOVE GRADE WHERE POOR SOIL CONDITIONS EXIST.
5. TIMBER EQUIPMENT MATS SHALL EXTEND A MINIMUM OF 10 FEET OUTSIDE OF THE WETLAND BOUNDARIES.
6. INSTALL EARTHEN RAMP APPROACHES TO TIMBER EQUIPMENT MATS. EARTHEN RAMPS TO BE CONSTRUCTED OF UPLAND MATERIAL, TOP SOIL SHALL NOT BE USED TO CONSTRUCT EARTHEN RAMPS.
7. A GEOTEXTILE UNDERLAYMENT SHALL BE USED UNDER THE WOOD MAT.

NO.	DATE	BY	REVISION DESCRIPTION	W.O. NO.	CHK.	APP.

TRANSCONTINENTAL GAS PIPE LINE COMPANY, LLC
STANDARD ENVIRONMENTAL DETAIL

WEC WETLAND EQUIPMENT CROSSING

COMMONWEALTH OF PENNSYLVANIA
REGISTERED PROFESSIONAL
SUZANNE MARIE KING
ENGINEER
PE082757

SUZANNE KING REG NO. PE 082757

BL Companies
ARCHITECTURE
ENGINEERING
ENVIRONMENTAL
LAND SURVEYING

REVISIONS

NO.	DATE	BY	DESCRIPTION	W.O. NO.	CHK.	APP.
0	08/28/2015	BL	ISSUED FOR PADEP SUBMITTAL	W0572385	JLK	SMK
1	12/02/2015	BL	ISSUED FOR PADEP RESUBMITTAL	W0572385	JLK	SMK
2	Oct. 2016	BL	PADEP TECHNICAL DEFICIENCY RESPONSE #1	W0572385	JLK	SMK
3	April 2017	BL	PADEP TECHNICAL DEFICIENCY RESPONSE #2	W0572385	JLK	SMK
4	***AUG. 2017***	***BL***	***PADEP TECHNICAL DEFICIENCY RESPONSE #3***	***W0572385***	***JLK***	***SMK***

TRANSCONTINENTAL GAS PIPE LINE COMPANY, LLC
ATLANTIC SUNRISE PROJECT

BEST MANAGEMENT PRACTICES AND QUANTITIES PLAN SET

BEST MANAGEMENT PRACTICES DETAILS

Williams GAS PIPELINE

DRAWN BY:	ELZ	DATE:	05/15/15	ISSUED FOR BID:	SCALE:
CHECKED BY:	JLK	DATE:	07/02/15	ISSUED FOR CONSTRUCTION:	REVISION: 4
APPROVED BY:	SMK	DATE:	07/08/15	DRAWING NUMBER: ASR-BMP	SHEET 11 OF 11
W/O:					

Drawn By & Date/Time: CScanzello Jul 27, 2017 - 4:34pm
Drawing Location & Name: G:\JOBS14\14C\14C4909\DWG\BMPs&DETAILS\PL_DN14C4909(10)_SU-BMP-11.dwg

TABLE 1: SEDIMENT BARRIER SUMMARY

E&S WORKSHEET #1
Compost Filter Sock

PROJECT NAME: ATLANTIC SUNRISE PROPOSED GAS PIPELINE
LOCATION: LENOX TOWNSHIP, SUSQUEHANNA COUNTY
PREPARED BY: ESS DATE: 03/25/2017
CHECKED BY: AJB DATE: 04/03/2017

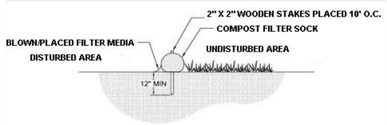

MILEPOST NO.	Dia. In.	LOCATION BEGIN STA.		END STA.	TYPE	SLOPE PERCENT	SLOPE LENGTH ABOVE BARRIER (FT)
50	12	2670+50	to	2674+00		5	102
	24	2674+00	to	2675+00		9	107
	12	2675+25	to	2676+75		6	84
	24	2677+00	to	2677+75		14	87
	12	2677+75	to	2684+00		4	203
	12	2679+25	to	2679+50		4	83
	12	2679+50	to	2679+50	Road	4	83
	12	2685+75	to	2686+25	Road	2	82
	24	2686+50	to	2687+50		8	172
	12	2687+75	to	2693+00	Road	7	98
51	12	2688+00	to	2693+00		9	77
	12	2693+25	to	2694+50		6	140
	24	2694+50	to	2702+50		15	151
	12	2702+50	to	2711+25		8	120
	12	2711+50	to	2711+50	Stream	23	14
	24	2712+00	to	2716+00		14	134
	12	2718+00	to	2718+75	Wetland	9	89
	24	2718+75	to	2728+75		16	153
	24	2728+00	to	2729+50	Stream	26	103
	24	2729+50	to	2734+00		13	204
	18	2734+00	to	2744+75		13	200
52	24	2744+75	to	2749+75		13	85
	12	2750+00	to	2753+00		5	204
	24	2754+00	to	2758+00		22	84
	32	2758+25	to	2763+75	Wetland	20	224
	24	2762+50	to	2764+75		31	93
	12	2764+75	to	2765+50	Stream	3	25
	12	2765+25	to	2766+75		14	60
	12	2766+75	to	2768+25	Road	12	15
	24	2767+25	to	2780+25		9	150
	12	2780+50	to	2780+50	Road	17	23
	24	2781+25	to	2787+00		11	132
	18	2787+50	to	2794+50			328
53	24	2794+50	to	2803+50			126
	24	2794+75	to	2795+00	Wetland	7	378
	24	2795+25	to	2796+00	Wetland	7	378
	12	2803+50	to	2812+00			103
	24	2812+25	to	2814+25		10	113

SOURCE: Pennsylvania Erosion and Sediment Pollution Control Manual, Page 372

E&S WORKSHEET #1
Compost Filter Sock

PROJECT NAME: ATLANTIC SUNRISE PROPOSED GAS PIPELINE
LOCATION: LENOX TOWNSHIP, SUSQUEHANNA COUNTY
PREPARED BY: ESS DATE: 03/25/2017
CHECKED BY: AJB DATE: 04/03/2017

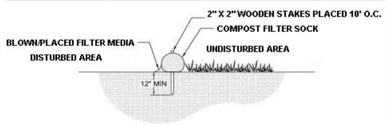

MILEPOST NO.	Dia. In.	LOCATION BEGIN STA.		END STA.	TYPE	SLOPE PERCENT	SLOPE LENGTH ABOVE BARRIER (FT)
53	24	2814+25	to	2815+25	Wetland	10	114
	24	2815+25	to	2818+00		12	88
	24	2818+00	to	2819+00		21	143
	12	2819+00	to	2819+75	Stream	14	24
	12	2819+75	to	2822+00		14	25
	18	2820+00	to	2822+75	Road	17	110
	12	2822+75	to	2822+75	Road	9	19
	24	2823+25	to	2823+25	Road	5	470
	24	2823+25	to	2830+00		5	440
	24	2830+00	to	2837+50		4	142
	12	2837+00	to	2837+75	Wetland	3	211
	12	2838+00	to	2838+75		2	258
	24	2839+50	to	2841+75		7	168
	12	282+50	to	2844+25		10	61
	12	2844+25	to	2844+50	Road	15	15
54 M-0067	24	*2844+50*	*to*	*2856+75*	*MOC-0067 within*	27	89
	12	2857+00	to	2858+75	Wetland/Stream	10	110
	24	2858+50	to	2870+75		8	161
	12	2870+75	to	2871+75	Wetland	5	176
	12	2871+75	to	2878+25		7	150
	12	2878+25	to	2891+25		2	100
	12	2891+25	to	2891+50	Road	8	30
	12	2891+50	to	2892+50	Road	5	187
	12	2891+50	to	2898+00		5	212
55	24	2898+00	to	2909+00		25	105
	12	2909+00	to	2910+25	Wetland/Stream	16	45
	12	2910+25	to	2911+25		17	40
	24	2915+75	to	2919+75		8	181
	12	2920+00	to	2921+50		7	120
	12	2921+75	to	2923+00		6	142
	12	2923+00	to	2928+25	Wetland	5	89
	12	292675	to	292800		3	120
M-0061	24	*2928+25*	*to*	*1+00*		10	87
	18	*1+25*	*to*	*5+50*	*Wetland/Stream*	5	286
	24	*5+50*	*to*	*2939+75*		18	82
	18	2939+75	to	2942+50		15	116
	12	2942+50	to	2942+50	Road	17	12
	12	2942+75	to	2943+00	Road	15	63

Reroute Area
SOURCE: Pennsylvania Erosion and Sediment Pollution Control Manual, Page 372

E&S WORKSHEET #1
Compost Filter Sock

PROJECT NAME: ATLANTIC SUNRISE PROPOSED GAS PIPELINE
LOCATION: LENOX TOWNSHIP, SUSQUEHANNA COUNTY
PREPARED BY: ESS DATE: 03/25/2017
CHECKED BY: AJB DATE: 04/03/2017

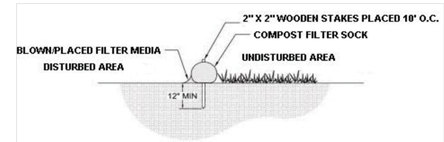

MILEPOST NO.	Dia. In.	LOCATION BEGIN STA.		END STA.	TYPE	SLOPE PERCENT	SLOPE LENGTH ABOVE BARRIER (FT)
55	18	2943+00	to	2946+25		14	122
M-0062	32	*2946+25*	*to*	*9+25*		9	352
56	24	*7+75*	*to*	*12+50*	*Wetland*	7	375
	12	*12+00*	*to*	*2963+25*		7	61
	18	2964+00	to	2967+50		16	175
	12	2967+50	to	2969+50		11	65
	24	2969+50	to	2971+50		15	74
	18	2971+50	to	2973+25		19	116
	24	2975+50	to	2990+75		13	113
	12	2990+75	to	2997+25	Wetland/Stream	7	114
	24	2994+75	to	2996+75		7	153
	24	2997+00	to	2998+75		7	150
	12	2999+00	to	3000+50	Wetland/Stream	5	110
	24	3000+50	to	3007+50		7	138
57	18	3007+75	to	3011+25		13	192
	12	3011+50	to	3011+50	Road	17	22
	12	3011+75	to	3011+75	Road	14	17
	12	3011+75	to	3013+00		15	90
	24	3013+00	to	3017+75		15	136
	12	3017+50	to	3018+00	Stream	12	22
	24	3018+00	to	3018+50		11	251

Reroute Area
SOURCE: Pennsylvania Erosion and Sediment Pollution Control Manual, Page 372

TABLE 6: LOCATIONS OF ACID SOILS ALONG CPLN PIPELINE IN SUSQUEHANNA COUNTY

MP Begin	MP End	County	Map Unit Symbol	pH	MP Begin	MP End	County	Map Unit Symbol	pH
50.59	50.66	Susquehanna	LkB2	5.50	54.13	54.16	Susquehanna	MgD	5.50
50.66	50.80	Susquehanna	LoB	5.50	54.16	54.42	Susquehanna	VsB	6.00
50.80	50.84	Susquehanna	LsD	5.40	54.42	54.45	Susquehanna	MgD	5.50
50.84	50.92	Susquehanna	WsD	5.50	54.45	54.64	Susquehanna	VfB	5.50
50.92	51.01	Susquehanna	WfC2	5.30	54.64	54.71	Susquehanna	McB2	5.80
51.01	51.05	Susquehanna	MoC2	5.30	54.71	54.91	Susquehanna	VcB2	5.60
51.05	51.11	Susquehanna	WeD2	5.30	54.91	54.99	Susquehanna	LoB	5.50
51.11	51.30	Susquehanna	MoC2	5.30	54.99	55.03	Susquehanna	LsD	5.40
51.30	51.37	Susquehanna	MoB2	5.30	55.03	55.08	Susquehanna	LoB	5.50
51.37	51.44	Susquehanna	WsD	5.50	55.08	55.1	Susquehanna	LsD	5.40
51.44	51.48	Susquehanna	LsD	5.40	55.1	55.13	Susquehanna	MgD	5.50
51.48	51.52	Susquehanna	MfC2	5.50	55.13	55.17	Susquehanna	VfB	5.50
51.52	51.65	Susquehanna	MrC2	5.20	55.17	55.3	Susquehanna	McB2	5.80
51.65	51.67	Susquehanna	MfC2	5.50	55.3	55.47	Susquehanna	VcB2	5.60
51.67	51.75	Susquehanna	WeD2	5.30	M-0061 0.00	M-0061 0.02	Susquehanna	VcB2	5.60
51.75	51.97	Susquehanna	MoC2	5.30	M-0061 0.02	M-0061 0.05	Susquehanna	VfC	6.00
51.97	52.00	Susquehanna	WfC2	5.30	M-0061 0.05	M-0061 0.09	Susquehanna	Mn	5.50
52.00	52.02	Susquehanna	MoC2	5.30	M-0061 0.09	M-0061 0.15	Susquehanna	VfB	5.50
52.02	52.20	Susquehanna	WfC2	5.30	M-0061 0.15	M-0061 0.16	Susquehanna	WfC2	5.30
52.20	52.26	Susquehanna	WfD2	5.20	55.63	55.86	Susquehanna	WfC2	5.30
52.26	52.34	Susquehanna	VcD2	5.90	M-0062 0	M-0062 0.02	Susquehanna	WfC2	5.30
52.34	52.37	Susquehanna	Bc	4.80	M-0062 0.02	M-0062 0.07	Susquehanna	WeC2	4.90
52.37	52.48	Susquehanna	MoC2	5.30	M-0062 0.07	M-0062 0.12	Susquehanna	WeB2	5.30
52.48	52.74	Susquehanna	MrC2	5.50	M-0062 0.12	M-0062 0.17	Susquehanna	WeC2	4.90
52.74	52.84	Susquehanna	McB2	5.80	M-0062 0.17	M-0062 0.20	Susquehanna	MrB2	5.20
52.84	52.99	Susquehanna	VcB2	5.60	M-0062 0.20	M-0062 0.26	Susquehanna	WfC2	5.30
52.99	53.06	Susquehanna	WeB2	5.30	56.1	56.11	Susquehanna	WfC2	5.30
53.06	53.08	Susquehanna	LoC2	5.40	56.11	56.19	Susquehanna	BsD	6.80
53.08	53.14	Susquehanna	McB2	5.80	56.19	56.21	Susquehanna	WsB	5.50
53.14	53.26	Susquehanna	MfC2	5.50	56.21	56.3	Susquehanna	BfD2	5.30
53.26	53.39	Susquehanna	VcC2	5.50	56.3	56.35	Susquehanna	LsD	5.40
53.39	53.44	Susquehanna	Wy	5.80	56.35	56.45	Susquehanna	MgB	5.80
53.44	53.52	Susquehanna	LkC2	5.40	56.45	56.47	Susquehanna	McB2	5.80
53.52	53.69	Susquehanna	WeB2	5.30	56.47	56.51	Susquehanna	VfB	5.50
53.69	53.70	Susquehanna	LkC2	5.40	56.51	56.58	Susquehanna	VsB	6.00
53.70	53.78	Susquehanna	WeB2	5.30	56.58	56.64	Susquehanna	MfC2	5.50
53.78	53.79	Susquehanna	WsB	5.50	56.64	56.77	Susquehanna	VsB	6.00
53.79	53.81	Susquehanna	WeB2	5.30	56.77	56.85	Susquehanna	Wy	5.80
53.81	53.83	Susquehanna	LkB2	5.50	56.85	56.94	Susquehanna	MfC2	5.50
53.83	53.87	Susquehanna	LkC2	5.40	56.94	57.06	Susquehanna	MrC2	5.50
53.87	53.89	Susquehanna	MrC2	5.50	57.06	57.14	Susquehanna	MoB2	5.30
53.89	53.90	Susquehanna	VcC2	5.50	57.14	57.17	Susquehanna	WfB2	5.30
M-0067 0.00	M-0067 0.15	Susquehanna	VcC2	5.50	57.17	57.21	Susquehanna	WeB2	5.30
54.05	54.07	Susquehanna	VcC2	5.50	57.21	57.28	Susquehanna	MoB2	5.30
54.07	54.13	Susquehanna	Mn	5.50	M-0119 0.00	M-0119 0.01	Susquehanna	MoB2	5.30

NOTE: SEE THE SUPPORTING PIPELINE AND ACCESS ROAD EROSION AND SEDIMENT CONTROL NARRATIVES FOR DEFINITIONS AND DESCRIPTIONS OF THE MAP UNIT SYMBOL ABBREVIATIONS.

TABLE 3: WATERBODIES CROSSED BY CPLN PIPELINE IN SUSQUEHANNA COUNTY

Waterbody ID	Waterbody Name	Milepost	County	Township	Stream Type	State Water Quality Use Classification - Designated Use	State Fishery Classification	Crossing Method	Crossing Window
WW-T30-21001	UNT to Willow Brook (WW-T30-21001)	51.35	Susquehanna	Lenox	Perennial	CWF, MF	Wild Trout Waters	Dam-and-Pump	January 1 through September 30
WW-T12-21004A	UNT to Willow Brook (WW-T12-21004A)	51.68	Susquehanna	Lenox	Intermittent	CWF, MF	Wild Trout Waters	N/A	January 1 through September 30
WW-T12-21004	UNT to Willow Brook (WW-T12-21004)	51.69	Susquehanna	Lenox	Perennial	CWF, MF	Wild Trout Waters	Dam-and-Pump	January 1 through September 30
~~WW-T12-21004~~	~~UNT to Willow Brook (WW-T12-21004)~~	~~51.69~~	~~Susquehanna~~	~~Lenox~~	~~Perennial~~	~~CWF, MF~~	~~Wild Trout Waters~~	~~Dam-and-Pump~~	~~January 1 through September 30~~
WW-T12-21001	Willow Brook (WW-T12-21001)	52.37	Susquehanna	Lenox	Perennial	CWF, MF	Wild Trout Waters	Dam-and-Pump	January 1 through September 30
WW-T50-21001	Utley Brook(WW-T50-21001)	53.40	Susquehanna	Lenox	Perennial	CWF, MF	Wild Trout Waters	Dam-and-Pump	January 1 through September 30
WW-T50-21002	Millard Creek(WW-T50-21002)	54.12	Susquehanna	Lenox	Perennial	CWF, MF	Wild Trout Waters	Dam-and-Pump	January 1 through September 30
WW-T50-21003	UNT to Millard Creek(WW-T50-21003)	54.13	Susquehanna	Lenox	Intermittent	CWF, MF	Wild Trout Waters	Dam-and-Pump	January 1 through September 30
WW-T12-21007	UNT to Millard Creek (WW-T12-21007)	55.10	Susquehanna	Lenox	Intermittent	CWF, MF	Wild Trout Waters	Dam-and-Pump	January 1 through September 30
WW-T12-21007A	UNT to Millard Creek(WW-T12-21007A)	55.11	Susquehanna	Lenox	Ephemeral	CWF, MF	Wild Trout Waters	Flume	January 1 through September 30
WW-T92-21002	UNT to Tower Branch (WW-T92-21002)	MOC-0061 0.07	Susquehanna	Lenox	Ephemeral	CWF, MF	Wild Trout Waters	Dam-and-Pump	January 1 through September 30
WW-T12-21009A	UNT to Tower Branch(WW-T12-21009A)	MOC-0061 0.09	Susquehanna	Lenox	Perennial	CWF, MF	Wild Trout Waters	Dam-and-Pump	January 1 through September 30
WW-T48-21001	Tower Branch(WW-T48-21001)	56.80	Susquehanna	Lenox	Perennial	CWF, MF	Wild Trout Waters	Dam-and-Pump	January 1 through September 30
WW-T17-21001	UNT to Tower Branch (WW-T17-21001)	57.15	Susquehanna	Lenox	Ephemeral	CWF, MF	Wild Trout Waters	Dam-and-Pump	January 1 through September 30

Key:
CWF = Coldwater Fishes
MF = Migratory Fishes
UNT = Unnamed Tributary

TABLE 4: WETLANDS CROSSED BY CPLN PIPELINE IN SUSQUEHANNA COUNTY

Wetland ID	Milepost	County	Township	Wetland Classes Impacted
W-T30-21002	51.48	Susquehanna	Lenox	PEM
W-T12-21001A	52.29	Susquehanna	Lenox	PEM
W-T70-21001A-1 / W-T70-21001A-2	52.95	Susquehanna	Lenox	PEM
W-T51-21004 / W-T51-21004-1	53.31	Susquehanna	Lenox	PEM
W-T64-21001-1	53.74	Susquehanna	Lenox	PEM
W-T50-21002	54.12	Susquehanna	Lenox	PFO
W-T50-21003	54.13	Susquehanna	Lenox	PFO
W-T12-21007A	54.38	Susquehanna	Lenox	PEM
W-T12-21008-1	55.10	Susquehanna	Lenox	PEM
W-T12-21009A / W-T12-21009A-1 / W-T12-21009A-2	55.46	Susquehanna	Lenox	PEM
W-T12-21009B	MOC-0061 0.05	Susquehanna	Lenox	PSS
W-T12-21009C	MOC-0061 0.06	Susquehanna	Lenox	PFO
W-T48-21002A	M-0062 0.19	Susquehanna	Lenox	PEM
W-T48-21002C	M-0062 0.22	Susquehanna	Lenox	PFO
W-T48-21001	56.75	Susquehanna	Lenox	PEM
W-T48-21003	56.81	Susquehanna	Lenox	PEM

Key:
PEM = Palustrine Emergent
PFO = Palustrine Forested
PSS = Palustrine Scrub-Shrub

TABLE 5: LOCATIONS OF ACIDIC BEDROCK ALONG CPLN PIPELINE IN SUSQUEHANNA COUNTY

Pipeline Facility/	Mile Post From	To	Linear Distance	Bedrock Formation	Acid Potential	Karst[1]	Rock Type
CPL-North							
Susquehanna	50.55	53.90	3.35	Catskill Formation	Typically non-acid sulfide bearing		Sandstone, Siltstone, and Shale; conglomerate; mudstone
Susquehanna	M-0067 0.00	M-0067 0.15	0.15				
Susquehanna	54.05	55.47	1.42				
Susquehanna	M-0061 0.00	M-0061 0.16	0.16				
Susquehanna	55.63	55.86	0.23				
Susquehanna	M-0062 0.00	M-0062 0.26	0.26				
Susquehanna	56.10	57.28	1.18				
Susquehanna	M-0119 0.00	M-0119 0.01	0.01				
		Subtotal	**6.76**				

Note: 1) No carbonate bedrock along CPLN alignment.

SUZANNE KING REG NO. PE 082757

BL Corporate — ARCHITECTURE ENGINEERING ENVIRONMENTAL LAND SURVEYING

REVISIONS

NO.	DATE	BY	DESCRIPTION	W.O. NO.	CHK.	APP.
0	08/28/2015	BL	ISSUED FOR PADEP SUBMITTAL	W0572385	JLK	SMK
1	12/02/2015	BL	ISSUED FOR PADEP RESUBMITTAL	W0572385	JLK	SMK
2	Oct. 2016	BL	PADEP TECHNICAL DEFICIENCY RESPONSE #1	W0572385	JLK	SMK
3	April 2017	BL	PADEP TECHNICAL DEFICIENCY RESPONSE #2	W0572385	JLK	SMK
4	*AUG. 2017*	*BL*	*PADEP TECHNICAL DEFICIENCY RESPONSE #3*	*W0572385*	*JLK*	*SMK*

TRANSCONTINENTAL GAS PIPE LINE COMPANY, LLC
ATLANTIC SUNRISE PROJECT
PROPOSED 30" CENTRAL PENN LINE NORTH
PENNSYLVANIA BEST MANAGEMENT PRACTICES AND QUANTITIES PLAN SET
SUSQUEHANNA COUNTY, PENNSYLVANIA
QUANTITY, CROSSING AND ACIDIC SOIL TABLES

Williams GAS PIPELINE

DRAWN BY:	ELZ	DATE:	05/15/15	ISSUED FOR BID:	SCALE:
CHECKED BY:	JLK	DATE:	07/02/15	ISSUED FOR CONSTRUCTION:	REVISION: 4
APPROVED BY:	SMK	DATE:	07/08/15	DRAWING NUMBER: 24-1601-70-28-A/1683_3-BMP-SU-TB	SHEET 1 OF 3
WO:					

Drawn By & Date/Time: CSconzello Jul 28, 2017 - 4:41pm
Drawing Location & Name: G:\JOBS14\14C\1404909\DWG\BMPs&DETAILS\PL_DN1404909(10)_SU-TB.dwg

Drawn By & Date/Time: CSconzello Jul 28, 2017 – 4:41pm
Drawing Location & Name: G:\JOBS14\14C\14C4909\DWG\BMPs&DETAILS\PL_DN14C4909(10)_SU-TB.dwg

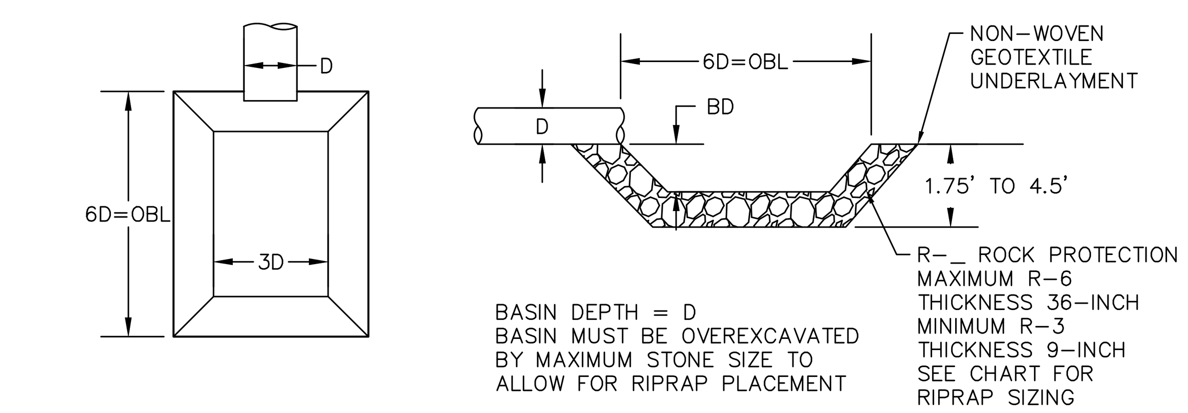

SINGLE PIPE SEDIMENT TRAP OUTLET BASIN			
PIPE DIAMETER (D)	BASIN LENGTH (6D)	BASIN INSIDE WIDTH (3D)	BASIN DEPTH (BD)
12"	6'	3'	1'
18"	9'	4.5'	1.5'

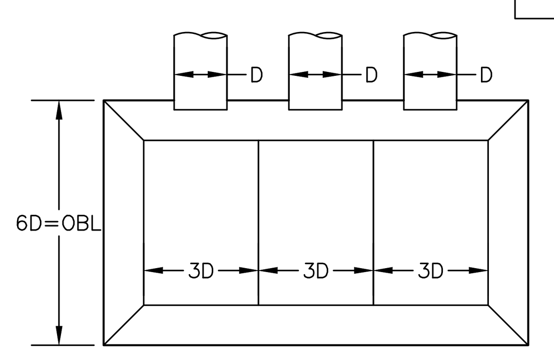

MULTIPLE PIPE SEDIMENT TRAP OUTLET BASIN			
PIPE DIAMETER (D)	BASIN LENGTH (6D)	BASIN INSIDE WIDTH (3D)	BASIN DEPTH (BD)
12"	6'	*	1'
18"	9'	*	1.5'

* BASIN INSIDE WIDTH IS 3 X DIAMETER(FT) X # OF PIPES

STANDARD CONSTRUCTION DETAIL #8–6
SEDIMENT TRAP OUTLET BASIN DETAIL
NO SCALE

NOTES:

1. ALL SEDIMENT TRAP OUTLET BASINS SHALL BE INSPECTED ON AT LEAST A WEEKLY BASIS AND AFTER EACH RUNOFF EVENT.
2. DISPLACED RIPRAP WITHIN THE OUTLET BASIN SHALL BE REPLACED IMMEDIATELY.
3. SIDE SLOPES SHALL NOT EXCEED 1.5H:1V.
4. IF NOT ON LEVEL GROUND, AREA NEAR PIPE SHALL BE EXCAVATED TO MAKE GENERALLY LEVEL TRAP.
5. RIPRAP WILL BE REMOVED AND DISTURBED AREA TO BE RESTORED IN ACCORDANCE WITH E AND S PLAN.
6. RIPRAP WILL HAVE NON–WOVEN GEOTEXTILE UNDERLAYMENT BETWEEN THE STONE AND THE SOIL.
7. CONTRACTOR SHALL USE SEDIMENT TRAP OUTLET BASIN WHEN FIELD CONDITIONS PREVENT THE EFFECTIVENESS OF THE LEVEL SPREADER.
8. DESIGN AND CALCULATIONS PROVIDED BY STV ENERGY SERVICES, INC.

NO.	DATE	BY	REVISION DESCRIPTION	W.O. NO.	CHK.	APP.

TRANSCONTINENTAL GAS PIPE LINE COMPANY LLC
STANDARD ENVIRONMENTAL DETAIL
CWC
CLEAN WATER CROSSING
(OUTLET BASIN DETAIL
STANDARD CONSTRUCTION DETAIL #8–6)

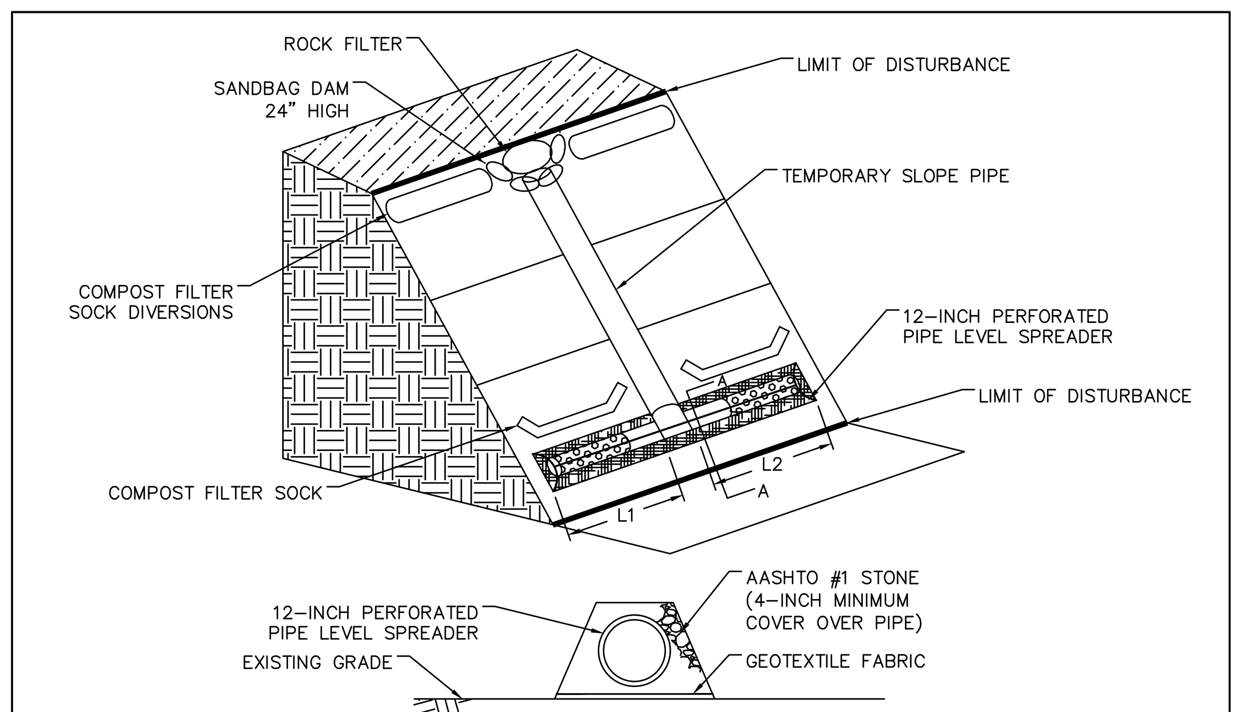

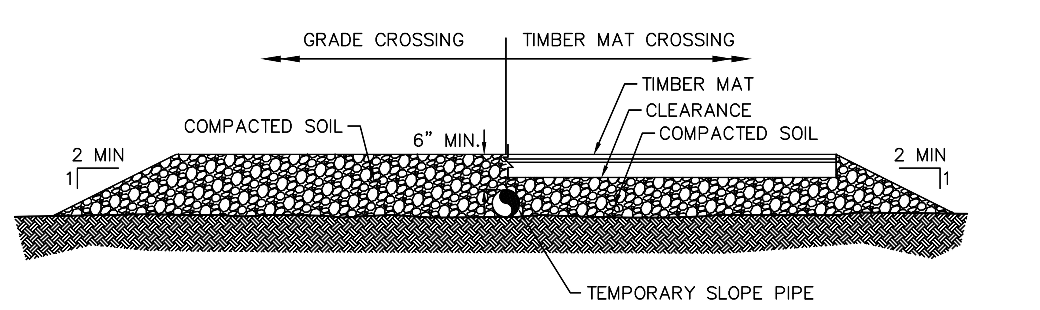

TEMPORARY SLOPE PIPE CROSSING
NO SCALE

NOTES:

1. LEVEL SPREADER PIPES TO BE 12–INCH JM EAGLE CORR PE PERFORATED PIPE (OR APPROVED EQUAL) AND SHALL BE CAPPED AT BOTH ENDS.
2. LEVEL SPREADER TO BE INSTALLED PARALLEL TO CONTOURS AT LEVEL ELEVATION.
3. PERFORATED PIPE TO BE UNDERLAIN WITH GEOTEXTILE FABRIC AND COVERED WITH AASHTO NO. 1 STONE. MINIMUM STONE COVER SHALL BE 4–INCHES OVER PERFORATED PIPE.
4. ALL LEVEL SPREADER STONE WILL BE REMOVED AND DISTBURBED AREA TO BE RESTORED IN ACCORDANCE WITH E&S PLAN.
5. LEVEL SPREADERS TO BE INSTALLED AT ALL TEMPORARY SLOPE PIPE DISCHARGES AT LOW POINTS OF DIVERSION BERM.
6. LEVEL SPREADERS TO BE INSPECTED WEEKLY OR AFTER MEASURABLE RAINFALL EVENT AND SHALL BE MAINTAINED IN GOOD CONDITION AT ALL TIMES.
7. TOTAL REQUIRED LEVER SPREADER LENGTH TO BE L1 + L2.
8. DESIGN AND CALCULATIONS PROVIDED BY STV ENERGY SERVICES, INC.

NO.	DATE	BY	REVISION DESCRIPTION	W.O. NO.	CHK.	APP.

TRANSCONTINENTAL GAS PIPE LINE COMPANY LLC
STANDARD ENVIRONMENTAL DETAIL
CWC
CLEAN WATER CROSSING
(TEMP. LEVEL SPREADER)

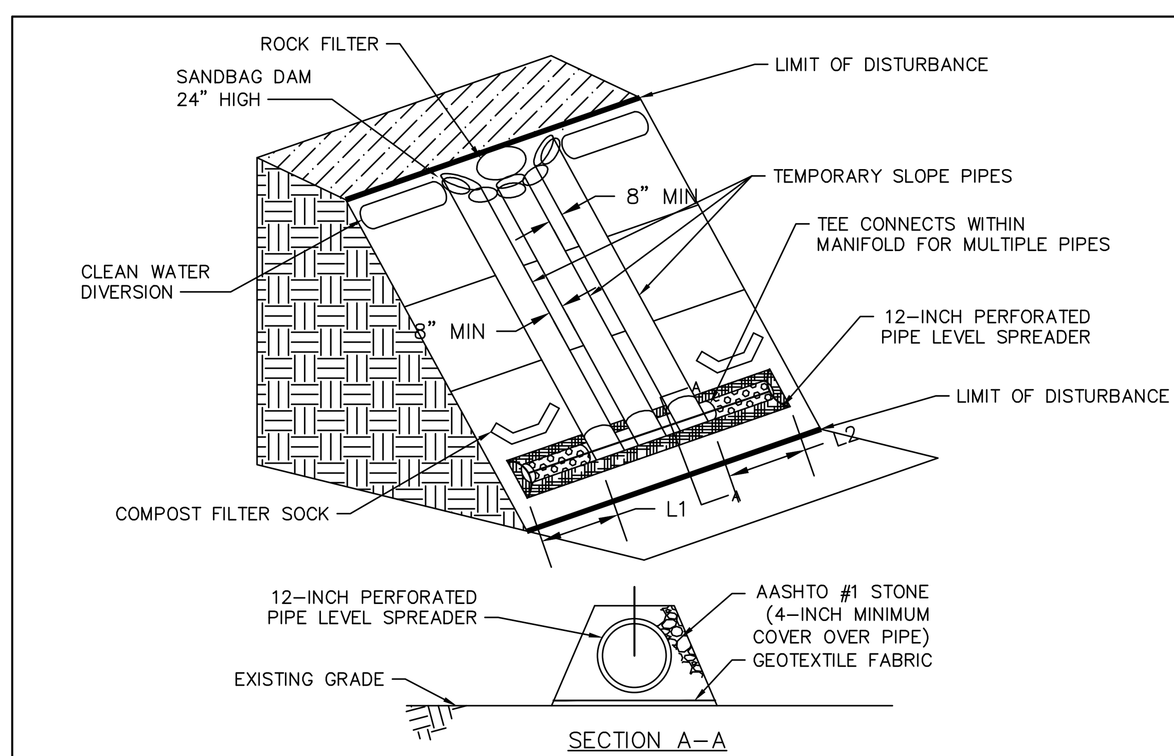

TEMPORARY MULTIPLE PIPE LEVEL SPREADER DETAIL
NO SCALE

NOTES:

1. LEVEL SPREADER PIPES TO BE 12–INCH JM EAGLE CORR PE PERFORATED PIPE (OR APPROVED EQUAL) AND SHALL BE CAPPED AT BOTH ENDS.
2. LEVEL SPREADER TO BE INSTALLED PARALLEL TO CONTOURS AT LEVEL ELEVATION.
3. PERFORATED PIPE TO BE UNDERLAIN WITH GEOTEXTILE FABRIC AND COVERED WITH AASHTO NO. 1 STONE. MINIMUM STONE COVER SHALL BE 4–INCHES OVER PERFORATED PIPE.
4. ALL LEVEL SPREADER STONE WILL BE REMOVED AND DISTBURBED AREA TO BE RESTORED IN ACCORDANCE WITH E&S PLAN.
5. LEVEL SPREADERS TO BE INSTALLED AT ALL TEMPORARY SLOPE PIPE DISCHARGES AT LOW POINTS OF DIVERSION BERM.
6. LEVEL SPREADERS TO BE INSPECTED WEEKLY OR AFTER MEASURABLE RAINFALL EVENT AND SHALL BE MAINTAINED IN GOOD CONDITION AT ALL TIMES.
7. TOTAL REQUIRED LEVER SPREADER LENGTH TO BE L1 + L2.
8. THE EDGE TO EDGE DIMENSION OF THE MULTIPLE SLOPE PIPES IS CALLED OUT AS A MINIMUM AND MAY BE INCREASED TO FACILITATE INSTALLATION OF SANDBAGS, T–CONNECTIONS, AND ACCESS ACROSS THE SLOPE PIPES.

NO.	DATE	BY	REVISION DESCRIPTION	W.O. NO.	CHK.	APP.

TRANSCONTINENTAL GAS PIPE LINE COMPANY LLC
STANDARD ENVIRONMENTAL DETAIL
CWC
CLEAN WATER CROSSING
(TEMP. MULTIPLE PIPE LEVEL SPREADER)

Susquehanna County
Temporary Perforated Pipe Level Spreader Calculations

MILE POST	DIVERSION ID	NUMBER OF SLOPE PIPES	NOMINAL SLOPE PIPE DIAMETER (IN)	Q (CFS)	AVAILABLE STATIC HEAD (FT)	MAJOR LOSSES (DUE TO FRICTION)	MINOR HEAD LOSSES (FT)	EFFECTIVE HEAD (FT)	LEVEL SPREADER PIPE DIAMETER (IN.)	PERFORATION DIAMETER (IN.)	NUMBER OF PERFORATIONS PER ROW	ORIFICE AREA PER FOOT (IN^2/FT)	ROW SPACING (IN.)	ORIFICE COEFFICIENT (Cd)	LEVEL SPREADER CAPACITY PER FOOT OF LENGTH (CFS / FT)	REQUIRED LENGTH (FT)	ACTUAL LENGTH (FT)	Level Spreader: TOTAL LEVEL SPREADER LENGTH (ALL PIPES)	OVERALL LEVEL SPREADER CAPACITY (CFS)	Downstream Slope (ft/ft)	Tc (min.)	Tc (sec.)	Velocity - sheetflow (ft/s)	Outlet Basin: Slope of Slope Pipe (ft/ft)	Velocity at Pipe Discharge (ft/s)	Riprap Size	Minimum Thickness of Riprap (in) (Non-Woven Geotextile Underlayment Required)	Minimum Length of Basin (ft) (6D, See Detial)	Minimum Bottom Width of Basin (ft) (3D x Number of Pipes, See Detail)
50																													
	50.04	1	12	4	2	0.754	0.256	0.99	12	0.375	6	4.10	1.94	0.61	0.139	28.85	30	30	4.16	0.03	5.506	330.358	0.303						
	50.05	1	12	2.4	5	0.293	0.1	4.607	12	0.375	6	4.10	1.94	0.61	0.299	8.02	10	10	2.99	0.03	5.506	330.358	0.303						
	50.06A	2	18	3.6																				0.060	7.090	R-4	18-inches	9.00	9.00
	50.06B	1	12	2.24																				0.060	7.090	R-4	18-inches	6.00	3.00
	50.07	1	12	1.76	7	0.165	0.056	6.779	12	0.375	6	4.10	1.94	0.61	0.363	4.85	5	5	1.81	0.07	4.517	271.023	0.369						
51																													
	51.01	4	12	5.32																				0.060	7.090	R-4	18-inches	6.00	12.00
	51.02A	2	12	3.6	6	0.621	0.211	5.169	12	0.375	6	4.10	1.94	0.61	0.317	11.36	15	30	4.75	0.08	4.378	262.698	0.381						
	51.02B	2	12	3.04	11	0.454	0.154	10.39	12	0.375	6	4.10	1.94	0.61	0.449	6.77	10	20	4.49	0.18	3.623	217.355	0.460						
	51.03A	2	12	3.12	5	0.476	0.162	4.362	12	0.375	6	4.10	1.94	0.61	0.291	10.72	15	30	4.37	0.1	4.156	249.353	0.401						
	51.03B	2	12	3.04	5	0.454	0.154	4.392	12	0.375	6	4.10	1.94	0.61	0.292	10.41	15	30	4.38	0.11	4.064	243.861	0.410						
	51.04A	1	12	3.52	11	0.595	0.202	10.2	12	0.375	6	4.10	1.94	0.61	0.445	7.91	10	10	4.45	0.12	3.983	238.953	0.418						
	51.04B	2	12	3.6	10	0.621	0.211	9.169	12	0.375	6	4.10	1.94	0.61	0.422	8.53	10	20	4.22	0.13	3.909	234.526	0.426						
	51.04C	1	12	5.6	11	1.405	0.478	9.117	12	0.375	6	4.10	1.94	0.61	0.421	13.31	15	15	6.31	0.12	3.983	238.953	0.418						
	51.05	1	12	0.8	12	0.038	0.013	11.95	12	0.375	6	4.10	1.94	0.61	0.482	1.66	5	5	2.41	0.19	3.577	214.626	0.466						
	51.06A	1	12	4.32	10	0.869	0.296	8.835	12	0.375	6	4.10	1.94	0.61	0.414	10.43	15	15	6.21	0.12	3.983	238.953	0.418						
	51.06B	2	12	3.84	10	0.699	0.238	9.063	12	0.375	6	4.10	1.94	0.61	0.420	9.15	10	20	4.20	0.08	4.378	262.698	0.381						
	51.06C	2	12	3.04	10	0.454	0.154	9.392	12	0.375	6	4.10	1.94	0.61	0.427	7.12	10	20	4.27	0.07	4.517	271.023	0.369						
52																													
	52.01	1	12	2.4	5	0.293	0.1	4.607	12	0.375	6	4.10	1.94	0.61	0.299	8.02	10	10	2.99	0.05	4.887	293.190	0.341						
53																													
	53.01A	2	12	3.04	9	0.454	0.154	8.392	12	0.375	6	4.10	1.94	0.61	0.404	7.53	10	20	4.04	0.13	3.909	234.526	0.426						
	53.01B	2	12	3.36	10	0.546	0.186	9.268	12	0.375	6	4.10	1.94	0.61	0.424	7.92	10	20	4.24	0.12	3.983	238.953	0.418						
	53.01C	2	12	3.68	7	0.646	0.22	6.134	12	0.375	6	4.10	1.94	0.61	0.345	10.66	15	30	5.18	0.12	3.983	238.953	0.418						
	53.01D	2	12	3.28	8	0.522	0.178	7.3	12	0.375	6	4.10	1.94	0.61	0.377	8.71	10	20	3.77	0.14	3.842	230.500	0.434						
54																													
	54.01	1	12	0.64	8	0.025	0.009	7.966	12	0.375	6	4.10	1.94	0.61	0.393	1.63	5	5	1.97	0.06	4.683	280.963	0.356						
	54.02	1	12	2.24	11	0.258	0.088	10.65	12	0.375	6	4.10	1.94	0.61	0.455	4.92	5	5	2.27	0.08	4.378	262.698	0.381						
55																													
	55.01A	1	12	4.32	7	0.869	0.296	5.835	12	0.375	6	4.10	1.94	0.61	0.337	12.83	15	15	5.05	0.04	5.148	308.882	0.324						
	55.01B	1	12	4.64	5	0.992	0.337	3.67	12	0.375	6	4.10	1.94	0.61	0.267	17.38	20	20	5.34	0.05	4.887	293.190	0.341						
	55.02	1	12	2.56	24	0.33	0.112	23.56	12	0.375	6	4.10	1.94	0.61	0.676	3.78	5	5	3.38	0.22	3.457	207.399	0.482						
56																													
	56.01	1	12	0.96	14	0.054	0.018	13.93	12	0.375	6	4.10	1.94	0.61	0.520	1.85	5	5	2.60	0.07	4.517	271.023	0.369						
	56.02	2	12	3.28	5	0.522	0.178	4.3	12	0.375	6	4.10	1.94	0.61	0.289	11.35	15	30	4.34	0.05	4.887	293.190	0.341						
	56.03	1	12	4.48	20	0.93	0.316	18.75	12	0.375	6	4.10	1.94	0.61	0.604	7.42	10	10	6.04	0.12	3.983	238.953	0.418						

* HIGH QUALITY OR EXCEPTIONAL VALUE WATERSHED
NOTE:
1. FLOWS HIGHLIGHTED YELLOW HAVE MORE THAN ONE PIPE, AND THEREFORE, THE FLOW HAS BEEN DIVIDED ACCORDINGLY.
2. "N/A" DENOTES LEVEL SPREADER DISHARGES TO EXISTING DRAINAGE PATH.
3. DESIGN AND CALCULATIONS PROVIDED BY STV ENERGY SERVICES, INC.

TABLE 2: TEMPORARY CLEAN WATER DIVERSION SUMMARY

TEMPORARY DIVERSION SUMMARY - SUSQUEHANNA COUNTY, PENNSYLVANIA																			
	DIVERSION										WATERBODY**					TEMPORARY PIPE			
MILE POST	DIVERSION ID	DIVERSION TYPE	BOTTOM WIDTH B (FT)	DEPTH D (FT)	TOP WIDTH W (FT)	Z1 (FT)	Z2 (FT)	TEMPORARY LINING	PERMANENT LINING	DISCHARGE TYPE	INITIAL WIDTH (FT)	TERMINAL WIDTH (FT)	LENGTH (FT)	RIP RAP SIZE***	RIP RAP THICKNESS (IN)	R.O.W. SLOPE (%)	Q (CFS)	TEMPORARY PIPE SIZE DIAMTER (IN)	# OF PIPES
50																			
	50.04	SWALE	2	2	10	2	2	SC150	REINFORCED VEGETATION	TEMP. PIPE	-	-	-	-	-	1	4	12	1
	50.05	SWALE	2	2	10	2	2	S75	UNREINFORCED VEGETATION	TEMP. PIPE	-	-	-	-	-	6	2.4	12	1
	50.06A	SWALE	2	2	10	2	2	SC150	REINFORCED VEGETATION	TEMP. PIPE	-	-	-	-	-	2	7.2	12	2
	50.06B	SWALE	2	2	10	2	2	S75	UNREINFORCED VEGETATION	TEMP. PIPE	-	-	-	-	-	2	2.24	12	1
	50.07	FILTER SOCK	0	1.25	8.75	0	7	S75	UNREINFORCED VEGETATION	TEMP. PIPE	-	-	-	-	-	7	1.76	12	1
51																			
	51.01	SWALE	2	2	10	2	2	SC250	REINFORCED VEGETATION	TEMP. PIPE	-	-	-	-	-	6	21.28	12	4
	51.02A	SWALE	2	2	10	2	2	SC150	REINFORCED VEGETATION	TEMP. PIPE	-	-	-	-	-	5	7.2	12	2
	51.02B	SWALE	2	2	10	2	2	S75	UNREINFORCED VEGETATION	TEMP. PIPE	-	-	-	-	-	10	6.08	12	2
	51.03A	SWALE	2	2	10	2	2	SC150	REINFORCED VEGETATION	TEMP. PIPE	-	-	-	-	-	6	6.24	12	2
	51.03B	SWALE	2	2	10	2	2	C125	REINFORCED VEGETATION	TEMP. PIPE	-	-	-	-	-	6	6.08	12	2
	51.04A	SWALE	2	2	10	2	2	SC250	REINFORCED VEGETATION	TEMP. PIPE	-	-	-	-	-	12	3.52	12	1
	51.04B	SWALE	2	2	10	2	2	SC150	REINFORCED VEGETATION	TEMP. PIPE	-	-	-	-	-	12	7.2	12	2
	51.04C	SWALE	2	2	10	2	2	SC150	REINFORCED VEGETATION	TEMP. PIPE	-	-	-	-	-	14	5.6	12	1
	51.05	FILTER SOCK	0	1	8.0	0	8	S75	UNREINFORCED VEGETATION	TEMP. PIPE	-	-	-	-	-	13	0.8	12	1
	51.06A	SWALE	2	2	10	2	2	S75	UNREINFORCED VEGETATION	TEMP. PIPE	-	-	-	-	-	15	4.32	12	1
	51.06B	SWALE	2	2	10	2	2	SC150	REINFORCED VEGETATION	TEMP. PIPE	-	-	-	-	-	9	7.68	12	2
	51.06C	SWALE	2	2	10	2	2	SC250	REINFORCED VEGETATION	TEMP. PIPE	-	-	-	-	-	9	6.08	12	2
52																			
	52.01	SWALE	2	2	10	2	2	S75	UNREINFORCED VEGETATION	TEMP. PIPE	-	-	-	-	-	7	2.4	12	1
53																			
	53.01A	SWALE	2	2	10	2	2	SC150	REINFORCED VEGETATION	TEMP. PIPE	-	-	-	-	-	9	6.08	12	2
	53.01B	SWALE	2	2	10	2	2	S75	UNREINFORCED VEGETATION	TEMP. PIPE	-	-	-	-	-	9	6.72	12	2
	53.01C	SWALE	2	2	10	2	2	S75	UNREINFORCED VEGETATION	TEMP. PIPE	-	-	-	-	-	9	7.36	12	2
	53.01D	SWALE	2	2	10	2	2	S75	UNREINFORCED VEGETATION	TEMP. PIPE	-	-	-	-	-	8	6.56	12	2
54																			
	54.01	SWALE	2	2	10	2	2	S75	UNREINFORCED VEGETATION	TEMP. PIPE	-	-	-	-	-	5	0.64	12	1
	54.02	SWALE	2	2	10	2	2	S75	UNREINFORCED VEGETATION	TEMP. PIPE	-	-	-	-	-	10	2.24	12	1
55																			
	55.01A	SWALE	2	2	10	2	2	S75	UNREINFORCED VEGETATION	TEMP. PIPE	-	-	-	-	-	7	4.32	12	1
	55.01B	SWALE	2	2	10	2	2	SC150	REINFORCED VEGETATION	TEMP. PIPE	-	-	-	-	-	6	4.64	12	1
	55.02	FILTER SOCK	0	1.6	8.7	0	5.5	SC150	REINFORCED VEGETATION	TEMP. PIPE	-	-	-	-	-	22	2.56	12	1
56																			
	56.01	FILTER SOCK	0	1	8.0	0	8	SC150	REINFORCED VEGETATION	TEMP. PIPE	-	-	-	-	-	15	0.96	12	1
	56.02	SWALE	2	2	10	2	2	SC150	REINFORCED VEGETATION	TEMP. PIPE	-	-	-	-	-	4	6.56	12	2
	56.03	FILTER SOCK	0	1.6	9.5	0	6	SC250	REINFORCED VEGETATION	TEMP. PIPE	-	-	-	-	-	15	4.48	12	1

*High Quality or Exceptional Value watershed
** Diversion End Treatment to Stream or Wetland
*** Sizing was determined using maximum allowable velocity outlined in Table 6.6 of the PA DEP Erosion and Sediment Pollution Control Program Manual, dated March 2012
Drainage Area > 5 acres due to valley/drainage ditch
Drainage Area > 5 acres due to wetlands

COMMONWEALTH OF PENNSYLVANIA
REGISTERED PROFESSIONAL
HEATH KEARNEY
ENGINEER
No. PE086042

07/28/17
HEATH KEARNEY REG NO PE 086042
ENGINEER OF RECORD FOR TEMPORARY PERFORATED PIPE LEVEL SPREADERS AND TEMPORARY OUTLET BASIN DESIGN AND CALCULATIONS

COMMONWEALTH OF PENNSYLVANIA
REGISTERED PROFESSIONAL
SUZANNE MARIE KING
ENGINEER
PE082757

SUZANNE KING REG NO. PE 082757
BL Companies
ARCHITECTURE
ENGINEERING
ENVIRONMENTAL
LAND SURVEYING

REVISIONS						
NO.	DATE	BY	DESCRIPTION	W.O. NO.	CHK.	APP.
0	08/28/2015	BL	ISSUED FOR PADEP SUBMITTAL	W0572385	JLK	SMK
1	12/02/2015	BL	ISSUED FOR PADEP RESUBMITTAL	W0572385	JLK	SMK
2	Oct. 2016	BL	PADEP TECHNICAL DEFICIENCY RESPONSE #1	W0572385	JLK	SMK
3	April 2017	BL	PADEP TECHNICAL DEFICIENCY RESPONSE #2	W0572385	JLK	SMK
4	*AUG. 2017*	*BL*	*PADEP TECHNICAL DEFICIENCY RESPONSE #3*	*W0572385*	*JLK*	*SMK*

TRANSCONTINENTAL GAS PIPE LINE COMPANY, LLC
ATLANTIC SUNRISE PROJECT
PROPOSED 30" CENTRAL PENN LINE NORTH
PENNSYLVANIA BEST MANAGEMENT PRACTICES AND QUANTITIES PLAN SET
SUSQUEHANNA COUNTY, PENNSYLVANIA
QUANTITY, CROSSING AND ACIDIC SOIL TABLES

Williams GAS PIPELINE

DRAWN BY:	ELZ	DATE:	05/15/15	ISSUED FOR BID:	SCALE:
CHECKED BY:	JLK	DATE:	07/02/15	ISSUED FOR CONSTRUCTION:	REVISION: 4
APPROVED BY:	SMK	DATE:	07/08/15	DRAWING NUMBER: 24–1601–70–28–A/1683_3–BMP–SU–TB	SHEET 2
WO:					OF 3

TABLE 7: RESOURCE SPECIFIC AVOIDANCE AND MINIMIZATION MEASURES

Resource Type (Stream or Wetland)	Resource Name	Resource ID	MP	Chapter 93 Classification, Wetland Classification	Stream Type (Perennial, Intermittent, Ephemeral)	Stream Trout Status (Class A Wild Trout, Wild Trout, Trout Stocked)	Wetland (Cowardin Classification)	Limits of Disturbance (LOD) Adjustments	Field Routing Adjustments within 600-foot Wide Corridor	Stream Bank Stabilization BMP	Width of Erosion Control Blanket Required for Stream Bank Stabilization (ft)
Stream	UNT to Willow Brook (WW-T30-21001)	WW-T30-21001	51.4	CWF, MF	Perennial	Wild Trout Waters	R3	LOD has been reduced to 80' to minimize impacts to WW-T30-21001.	This crossing was field routed for a perpendicular crossing angle and to avoid seep-fed PFOs ~300' upstream and northwest of the current route. Measures to avoid impacting this stream entirely were attempted; however, the landowner was not amenable to a western alignment shift that would have avoided this area.	SBR with SC150 fabric	50
Wetland	N/A	W-T30-21001	51.4	EV	N/A	N/A	PEM	LOD has been reduced to eliminate impacts to W-T-30-21001	This feature is no longer impacted based on LOD reductions.	N/A	N/A
Wetland	N/A	W-T30-21002	51.5	None	N/A	N/A	PEM	LOD has been reduced to 75' to minimize impacts to W-T30-21002	The pipeline was field routed to impact only the western edge of this small wetland. Measures to avoid impacting this wetland entirely were attempted; however, the landowner was not amenable to a western alignment shift that would have avoided this area.	N/A	N/A
Stream	UNT to Willow Brook (WW-T12-21004A)	WW-T12-21004A	51.7	CWF, MF	Intermittent	Wild Trout Waters	R4	LOD has been reduced to 85' to minimize impacts to WW-T12-21004A.	This crossing was field routed to maintain collocation with a recently consructed foreign pipeline. Crossing the stream at this location avoids impacting a PEM wetland ~200' to the northwest.	SBR with SC150 fabric	50
Stream	UNT to Willow Brook (WW-T12-21004)	WW-T12-21004	51.7	CWF, MF	Perennial	Wild Trout Waters	R3	LOD has been reduced to 80' to minimize impacts to WW-T12-21004.	This crossing was field routed to maintain collocation with a recently consructed foreign pipeline. Crossing the stream at this location avoids impacting a PEM wetland ~200' to the northwest.	SBR with SC150 fabric	50
Wetland	N/A	W-T12-21001A	52.3	None	N/A	N/A	PEM	LOD has been reduced to 75' to minimize impacts to W-T12-21001A.	This crossing was field routed to maintain collocation with a recently consructed foreign pipeline.	N/A	N/A
Stream	Willow Brook (WW-T12-21001)	WW-T12-21001	52.4	CWF, MF	Perennial	Wild Trout Waters	R3	LOD has been reduced to 80' to minimize impacts to WW-T12-21001.	This crossing was field routed to maintain collocation with a recently consructed foreign pipeline.	SBR with SC150 fabric	50
Wetland	N/A	W-T70-21001A-1 / W-T70-21001A-2	52.9	N/A	N/A	PEM	W-T70-21001A-2 does not extend across the full width of the LOD. Since the wetland width within the LOD is less than 75', the FERC Procedures do not require LOD reduction. In addition, an LOD reduction at this location would only be possible in the adjacent upland area and would not result in minimization of wetland impacts. The LOD within the W-T70-21001A-1 portion of the complex has been reduced to 75' to minimize impacts.	This crossing was field routed to both maintain collocation with a powerline ROW and to entirely avoid W-T70-21001A-3, the largest wetland in this system.	N/A	N/A
Wetland	N/A	W-T51-21004 / W-T51-21004-1	53.3	None	N/A	N/A	PEM	LOD was reduced to 75' for W-T51-21004 to minimize impacts. The LOD for feature W-T51-21004-1 has been reduced to eliminate impacts.	This crossing was field routed to both maintain collocation with a powerline ROW and to entirely avoid W-T51-21004-1.	N/A	N/A
Wetland	N/A	W-T51-21004	53.3	None	N/A	N/A	PEM	LOD has been reduced to 75' to minimize impacts to W-T51-21004.	This crossing was field routed to both maintain collocation with a powerline ROW and to entirely avoid W-T51-21004-1.	N/A	N/A
Stream	Utley Brook (WW-T50-21001)	WW-T50-21001	53.4	CWF, MF	Perennial	Wild Trout Waters	R3	LOD has been reduced to 75' to minimize impacts to WW-T50-21001.	This crossing was not significantly changed during field routing. The original crossing angle was nearly perpendicular and the crossing location allows fringing wetlands W-S1-21003-1; W-T51-21003-2; and W-T51-21003-2. The original crossing also avoids stream WW-T50-21001A entirely.	SBR with SC150 fabric	50
Wetland	N/A	W-T51-21003-2	53.4	EV	N/A	N/A	PEM	LOD has been reduced to eliminate impacts to W-T51-21003-2.	This feature is no longer impacted based on LOD reductions.	N/A	N/A
Wetland	N/A	W-T64-21001-1	53.7	None	N/A	N/A	PEM	LOD has been reduced to 75' to minimize impacts to W-T61-21001-1.	This crossing was field routed to keep PI's outside of the wetland boundary and to cross this feature at a roughly perpendicular angle. Crossing this feature at this location avoids a septic system ~300' NE, a pond 300' NW, and reduces the amount of tree clearing by crossing a woodland at its narrowest portion. This alignment also avoids W-T64-21001 entirely.	N/A	N/A
Stream	Millard Creek (WW-T50-21002)	WW-T50-21002	54.1	CWF, MF	Perennial	Wild Trout Waters	R3	LOD has been reduced to 85' to minimize impacts to WW-T50-21002.	This crossing was not significantly changed during field routing. The original crossing angle was nearly perpendicular and the crossing location allows fringing wetland W-T50-21001 to be avoided entirely.	SBR with SC150 fabric	50
Wetland	N/A	W-T50-21002	54.1	EV	N/A	N/A	PFO	W-T50-21002 does not extend across the full width of the LOD. Since the wetland width within the LOD is less than 75', the FERC Procedures do not require LOD reduction. In addition, an LOD reduction at this location would only be possible in the adjacent upland area and would not result in minimization of wetland impacts.	This crossing was not significantly changed during field routing. This is the smallest wetland in this area and it is located between WW-T50-21002 and WW-T50-21003. By routing the pipeline through this wetland, the above streams are crossed at perpendicular angles. W-T50-21003 is crossed at its narrowest portion at the edge of the wetland, and WW-T50-21003A and W-T50-21001 are avoided entirely.	N/A	N/A
Stream	UNT to Millard Creek (WW-T50-21003)	WW-T50-21003	54.1	CWF, MF	Intermittent	Wild Trout Waters	R4	LOD has been reduced to 75' to minimize impacts to WW-T50-21003.	This crossing was not significantly changed during field routing. The original crossing angle was nearly perpendicular and the crossing location allows wetland W-T50-21003 to be crossed at its narrowest portion at the edge of the wetland.	SBR with SC150 fabric	50
Wetland	N/A	W-T50-21003	54.1	EV	N/A	N/A	PFO	LOD has been reduced to 75' to minimize impacts to W-T50-21003.	This crossing was not significantly changed during field routing. The original crossing angle was nearly perpendicular and the crossing location impacts the narrowest part of this wetland along its edge.	N/A	N/A
Stream	UNT to Millard Creek (WW-T50-21003A)	WW-T50-21003A	54.1	CWF, MF	Intermittent	Wild Trout Waters	R4	LOD has been reduced to eliminate impacts to WW-T50-21003A.	This feature is no longer impacted based on LOD reductions.	N/A	N/A
Wetland	N/A	W-T12-21007C	54.4	None	N/A	N/A	PFO	LOD has been reduced to eliminate impacts to W-T12-21007C.	This feature is no longer impacted based on LOD reductions.	N/A	N/A
Wetland	N/A	W-T12-21007A	54.4	None	N/A	N/A	PEM	LOD has been reduced to 80' to minimize impacts to W-T12-21007A. Further LOD reduction to 75' was not possible due to the saturated nature of the wetland, unconsolidated soils in area, adjacent stream, and additional excavations needed for the foreign line crossing. The additional workspace will provide storage for spoil within the wetland and will result in less impact than transporting material to a stockpile area outside the wetland.	This crossing was field routed to cross this wetland at a perpendicular angle and in a location that impacts interior uplands, reducing overall wetland impacts. This portion of the W-T12-21007 wetland system is PEM and previously disturbed by an existing foreign pipeline. Several other hydrologic features are avoided entirely by utilizing this crossing point: stream WW-T12-21006 and associated fringing wetlands W-T12-21007A-1; A-2; A-3; A-4; A-5; A-6; C; C-1 are all avoided entirely due to field routing in this area.	N/A	N/A
Wetland	N/A	W-T12-21008-1	55.1	EV	N/A	N/A	PEM	W-T12-21008-1 does not extend across the full width of the LOD. Since the wetland width within the LOD is less than 75', the FERC Procedures do not require LOD reduction. However, the portion of the LOD within this wetland was reduced by 5' to minimize impacts.	This crossing was field routed to cross this wetland at a perpendicular angle and to avoid W-T12-21008 entirely. This crossing location also allows the pipeline to remain ~250' east of a residential area and 300' west of a much larger wetland system.	N/A	N/A
Stream	UNT to Millard Creek (WW-T12-21007)	WW-T12-21007	55.1	CWF, MF	Intermittent	Wild Trout Waters	R4	LOD has been reduced to 85' to minimize impacts to WW-T12-21007.	This crossing was field routed to cross this wetland at a perpendicular angle and to avoid W-T12-21008 entirely. This crossing location also allows the pipeline to remain ~250' east of a residential area and 300' west of a much larger wetland system.	SBR with SC150 fabric	50
Stream	UNT to Millard Creek (WW-T12-21007A)	WW-T12-21007A	55.1	CWF, MF	Ephemeral	Wild Trout Waters	R6	LOD has been reduced to 85' to minimize impacts to WW-T12-21007A.	This crossing was field routed to cross this wetland at a perpendicular angle and to avoid W-T12-21008 entirely. This crossing location also allows the pipeline to remain ~250' east of a residential area and 300' west of a much larger wetland system.	SBR with SC150 fabric	50
Wetland	N/A	W-T12-21008-1	55.1	EV	N/A	N/A	PEM	W-T12-21008-1 does not extend across the full width of the LOD. Since the wetland width within the LOD is less than 75', the FERC Procedures do not require LOD reduction. However, the portion of the LOD within this wetland was reduced by 5' to minimize impacts.	This crossing was field routed to cross this wetland at a perpendicular angle and to avoid W-T12-21008 entirely. This crossing location also allows the pipeline to remain ~250' east of a residential area and 300' west of a much larger wetland system.	N/A	N/A
Stream	UNT to Millard Creek (WW-T12-21007)	WW-T12-21007	55.1	CWF, MF	Intermittent	Wild Trout Waters	R4	LOD has been reduced to 85' to minimize impacts to WW-T12-21007.	This crossing was field routed to cross this wetland at a perpendicular angle and to avoid W-T12-21008 entirely. This crossing location also allows the pipeline to remain ~250' east of a residential area and 300' west of a much larger wetland system.	SBR with SC150 fabric	50
Stream	UNT to Millard Creek (WW-T12-21007A)	WW-T12-21007A	55.1	CWF, MF	Ephemeral	Wild Trout Waters	R6	LOD has been reduced to 85' to minimize impacts to WW-T12-21007A.	This crossing was field routed to cross this wetland at a perpendicular angle and to avoid W-T12-21008 entirely. This crossing location also allows the pipeline to remain ~250' east of a residential area and 300' west of a much larger wetland system.	SBR with SC150 fabric	50
Wetland	N/A	W-T12-21008-1	55.1	EV	N/A	N/A	PEM	W-T12-21008-1 does not extend across the full width of the LOD. Since the wetland width within the LOD is less than 75', the FERC Procedures do not require LOD reduction. However, the portion of the LOD within this wetland was reduced by 5' to minimize impacts.	This crossing was field routed to cross this wetland at a perpendicular angle and to avoid W-T12-21008 entirely. This crossing location also allows the pipeline to remain ~250' east of a residential area and 300' west of a much larger wetland system.	N/A	N/A
Stream	UNT to Millard Creek (WW-T12-21007)	WW-T12-21007	55.1	CWF, MF	Intermittent	Wild Trout Waters	R4	LOD has been reduced to 85' to minimize impacts to WW-T12-21007.	This crossing was field routed to cross this wetland at a perpendicular angle and to avoid W-T12-21008 entirely. This crossing location also allows the pipeline to remain ~250' east of a residential area and 300' west of a much larger wetland system.	SBR with SC150 fabric	50
Stream	UNT to Millard Creek (WW-T12-21007A)	WW-T12-21007A	55.1	CWF, MF	Ephemeral	Wild Trout Waters	R6	LOD has been reduced to 85' to minimize impacts to WW-T12-21007A.	This crossing was field routed to cross this wetland at a perpendicular angle and to avoid W-T12-21008 entirely. This crossing location also allows the pipeline to remain ~250' east of a residential area and 300' west of a much larger wetland system.	SBR with SC150 fabric	50
Wetland	N/A	W-T12-21008-1	55.1	EV	N/A	N/A	PEM	W-T12-21008-1 does not extend across the full width of the LOD. Since the wetland width within the LOD is less than 75', the FERC Procedures do not require LOD reduction. In addition, an LOD reduction at this location would only be possible in the adjacent upland area and would not result in minimization of wetland impacts.	This crossing was field routed to cross this wetland at a perpendicular angle and to avoid W-T12-21008 entirely. This crossing location also allows the pipeline to remain ~250' east of a residential area and 300' west of a much larger wetland system.	N/A	N/A
Wetland	N/A	W-T12-21008-1	55.1	EV	N/A	N/A	PEM	W-T12-21008-1 does not extend across the full width of the LOD. Since the wetland width within the LOD is less than 75', the FERC Procedures do not require LOD reduction. However, the portion of the LOD within this wetland was reduced by 5' to minimize impacts.	This crossing was field routed to cross this wetland at a perpendicular angle and to avoid W-T12-21008 entirely. This crossing location also allows the pipeline to remain ~250' east of a residential area and 300' west of a much larger wetland system.	N/A	N/A
Wetland	N/A	W-T48-21002A	M-0062 0.19	None	N/A	N/A	PEM	LOD has been reduced to 75' to minimize impacts to W-T48-21002A.	This crossing was field routed to keep PI's outside of the wetland boundary and to cross at a perpendicular angle at the narrowest portion of the wetland. This wetland crossing is ~250' in width. By routing the pipeline in this general area, much larger wetland systems that completely surround the area are avoided. Crossing this wetland also allows tree clearing to be reduced by utilizing an upland pasture south of the wetland.	N/A	N/A
Wetland	W-T48-21002C	W-T48-21002C	M-0062 0.22	None	N/A	N/A	PFO	LOD has been reduced to 75' to minimize impacts to W-T48-21002C.	This crossing was field routed to keep PI's outside of the wetland boundary and to cross at a perpendicular angle at the narrowest portion of the wetland. This wetland crossing is ~250' in width. By routing the pipeline in this general area, much larger wetland systems that completely surround the area are avoided. Crossing this wetland also allows tree clearing to be reduced by utilizing an upland pasture south of the wetland.	N/A	N/A
Wetland	N/A	W-T48-21001	56.7	EV	N/A	N/A	PEM	W-T48-21001 does not extend across the full width of the LOD. Since the wetland width within the LOD is less than 75', the FERC Procedures do not require LOD reduction. In addition, an LOD reduction at this location would only be possible in the adjacent upland area and would not result in minimization of wetland impacts.	This crossing was not significantly changed during field routing. The original alignment avoids a majority of this wetland, crossing the wetland at a narrow point at the northern boundary.	N/A	N/A
Stream	UNT to Tower Branch (WW-T48-21001A)	WW-T48-21001A	56.8	CWF, MF	Intermittent	Wild Trout Waters	R4	LOD has been reduced to eliminate impacts to WW-T48-21001A	This feature is no longer impacted based on LOD reductions.	N/A	N/A
Stream	Tower Branch (WW-T48-21001)	WW-T48-21001	56.8	CWF, MF	Perennial	Wild Trout Waters	R3	LOD has been reduced to 75' to minimize impacts to WW-T48-21001.	This crossing was not significantly changed during field routing. The original alignment crosses the stream at a perpendicular angle.	SBR with SC150 fabric	50
Wetland	N/A	W-T48-21003	56.8	EV	N/A	N/A	PEM	LOD has been reduced to 75' to minimize impacts to W-T48-21003.	This crossing was not significantly changed during field routing. The original alignment crosses this wetland at a perpendicular angle and at its eastern edge.	N/A	N/A
Stream	UNT to Tower Branch (WW-T17-21001)	WW-T17-21001	57.2	CWF, MF	Ephemeral	Wild Trout Waters	R6	LOD has been reduced to 85' to minimize impacts to WW-T17-21001.	This crossing was not significantly changed during field routing. The original alignment crosses this stream at a perpendicular angle while maintaining collocation with an existing foreign pipeline.	SBR with SC150 fabric	50
Pond	Unnamed pond	WB-T87-21001	57.2	CWF, MF	N/A	None	PUB	N/A	Man-made retention pond.	N/A	N/A

Drawn By & Date/Time: CSconzello Jul 28, 2017 – 4:41pm
Drawing Location & Name: G:\JOBS14\14C\14C4909\DWG\BMPs&DETAILS\PL_DN14C4909(10)_SU-TB.dwg

COMMONWEALTH OF PENNSYLVANIA REGISTERED PROFESSIONAL SUZANNE MARIE KING ENGINEER PE082757

SUZANNE KING REG NO. PE 082757

BL Companies ARCHITECTURE ENGINEERING ENVIRONMENTAL LAND SURVEYING

REVISIONS

NO.	DATE	BY	DESCRIPTION	W.O. NO.	CHK.	APP.
0	08/28/2015	BL	ISSUED FOR PADEP SUBMITTAL	W0572385	JLK	SMK
1	12/02/2015	BL	ISSUED FOR PADEP RESUBMITTAL	W0572385	JLK	SMK
2	Oct. 2016	BL	PADEP TECHNICAL DEFICIENCY RESPONSE #1	W0572385	JLK	SMK
3	April 2017	BL	PADEP TECHNICAL DEFICIENCY RESPONSE #2	W0572385	JLK	SMK
4	AUG. 2017	BL	PADEP TECHNICAL DEFICIENCY RESPONSE #3	W0572385	JLK	SMK

TRANSCONTINENTAL GAS PIPE LINE COMPANY, LLC

ATLANTIC SUNRISE PROJECT

PROPOSED 30" CENTRAL PENN LINE NORTH
PENNSYLVANIA BEST MANAGEMENT PRACTICES AND
QUANTITIES PLAN SET
SUSQUEHANNA COUNTY, PENNSYLVANIA

QUANTITY, CROSSING AND ACIDIC SOIL TABLES

Williams GAS PIPELINE

DRAWN BY: ELZ	DATE: 05/15/15	ISSUED FOR BID:		SCALE:	
CHECKED BY: JLK	DATE: 07/02/15	ISSUED FOR CONSTRUCTION:		REVISION: 4	
APPROVED BY: SMK	DATE: 07/08/15	DRAWING NUMBER: 24-1601-70-28-A/1683_3-BMP-SU-TB		SHEET 3	OF 3
WO:					