ATLANTIC SUNRISE PROJECT
PROPOSED 30" NATURAL GAS PIPELINE

POST CONSTRUCTION STORMWATER MANAGEMENT PLANS
FOR
NORTH DIAMOND REGULATOR STATION &
ASSOCIATED PERMANENT ACCESS ROADS

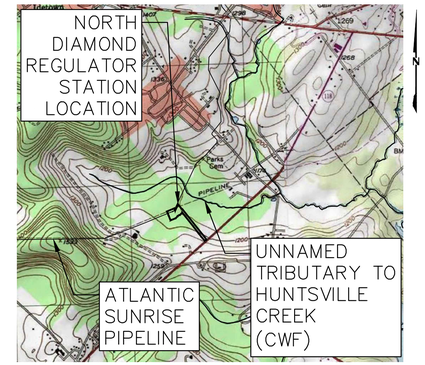

USGS HARVEYS LAKE QUADRANGLE

VICINITY MAP

SCALE: 1"=2,000'

FACILITY NAME & TYPE	DRAWING NO.	SHEET NO.	DRAWING NAME
NORTH DIAMOND REGULATOR STATION	(36-7935)MF-1A-9	1 of 8	COVER SHEET
	(36-7935)MF-1A-9	2 of 8	SENSITIVE RESOURCES MAP
	(36-7935)MF-1A-9	3 of 8	POST CONSTRUCTION STORMWATER MANAGEMENT PLAN
	(36-7935)MF-1A-9	4 of 8	POST CONSTRUCTION STORMWATER MANAGEMENT PLAN
	(36-7935)MF-1A-9	5 of 8	PCSM NOTES AND DETAILS
	(36-7935)MF-1A-9	6 of 8	PCSM NOTES AND DETAILS
	(36-7935)MF-1A-9	7 of 8	PCSM NOTES AND DETAILS
	(36-7935)MF-1A-9	8 of 8	PCSM NOTES AND DETAILS

PHASE 2

LEHMAN TOWNSHIP
LUZERNE COUNTY

PENNSYLVANIA

811 Know what's below. Call before you dig.

PENNSYLVANIA ACT 287 (1974) AS AMENDED BY PENNSYLVANIA ACT 199 (2004) REQUIRES NO LESS THAN THREE (3) WORKING DAYS AND NO MORE THAN (10) WORKING DAYS NOTICE TO UTILITIES BEFORE YOU EXCAVATE, DRILL, BLAST OR DEMOLISH.

ENGINEER OF RECORD
BL COMPANIES
4242 CARLISLE PIKE, SUITE 260
CAMP HILL, PA 17011
P:717-651-9850
F:717-651-9858

COMMONWEALTH OF PENNSYLVANIA
REGISTERED PROFESSIONAL
ALARIC JAMES BUSHER
EXPIRATION DATE
RS-PE-60320

ALARIC J. BUSHER REG NO. PE 60320

BL Companies
ARCHITECTURE ENGINEERING ENVIRONMENTAL LAND SURVEYING

REVISIONS

NO.	DATE	BY	DESCRIPTION	W.O. NO.	CHK.	APP.
0	08/28/2015	BL	ISSUED FOR PADEP PERMIT SUBMITTAL	W01161499	DAK	AJB
1	12/02/2015	BL	ISSUED FOR PADEP RESUBMITTAL	W01161499	DAK	AJB
3	03/28/2016	BL	ISSUED FOR PADEP RESUBMITTAL	W01161499	AJB	AJB
4	*Oct. 2016*	*BL*	*PADEP TECHNICAL DIFICIENCY RESPONSE #1*	*W01161499*	*AJB*	*AJB*

TRANSCONTINENTAL GAS PIPE LINE COMPANY, LLC
ATLANTIC SUNRISE PROJECT– PROPOSED 30" NATURAL GAS PIPELINE
POST CONSTRUCTION STORMWATER MANAGEMENT PLANS FOR NORTH DIAMOND REGULATOR STATION & ASSOCIATED PERMANENT ACCESS ROADS
LEHMAN TOWNSHIP, LUZERNE COUNTY, PENNSYLVANIA
COVER SHEET

Williams

DRAWN BY: JEC	DATE: 04/03/15	ISSUED FOR BID:		SCALE:	AS NOTED
CHECKED BY: AJB	DATE: 04/03/15	ISSUED FOR CONSTRUCTION:		REVISION:	*4*
APPROVED BY: AJB	DATE: 07/17/15	DRAWING NUMBER:	(36–7935)MF–1A–9	SHEET	1 OF 8
W.O: 1161499					

Drawn By & Date/Time: hthomas Nov 11, 2016 – 11:55am
Drawing Location & Name: G:\JOBS14\14C\14C4909\DWG\010-CPLN\FRS_CV14C4909(10)_PCSM-LUZ-NDIAMOND.dwg

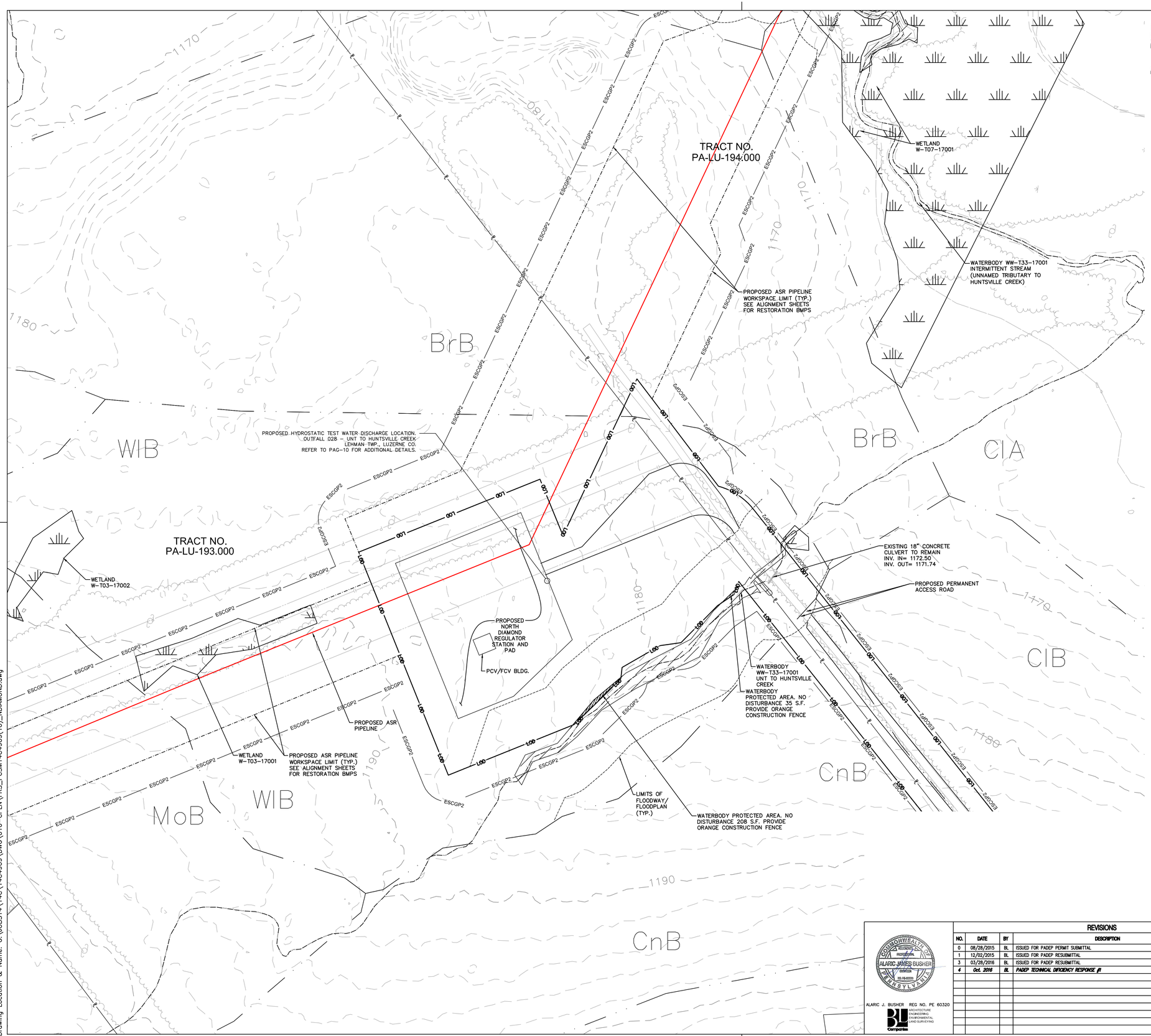

LEGEND

EXISTING FEATURES

- PROPERTY BOUNDARY LINE (APPROXIMATE)
- EXISTING MAJOR CONTOUR (10' INTERVAL)
- EXISTING MINOR CONTOUR (2' INTERVAL)
- FENCE
- STONE ROW
- SOIL BOUNDARY
- TREELINE/WOODLANDS
- CENTERLINE STREAM/EDGE WATERBODY
- DELINEATED WETLANDS
- × 1353.0 SPOT ELEVATION
- TREE OR BUSH
- UTILITY POLE AND UTILITY LINE
- GUY POLE
- GUY POLE OR ANCHOR
- POST
- SIGN
- WATER WELL
- UTILITY BOX
- MONUMENT (PROPERTY BOUNDARY MARKER)
- IRON PIPE OR PIN (PROPERTY BOUNDARY MARKER)
- WsB SOIL TYPE DESIGNATION
- CENTERLINE GAS PIPELINE
- ESCGP2 ESCGP-2 PERMIT BOUNDARY
- LOD LIMIT OF DISTURBANCE (NORTH DIAMOND REGULATOR STATION)
- LIMIT OF WORKSPACE (OVERALL PIPELINE PROJECT)
- EXISTING ROAD
- ROW
- LIMITS OF FLOODWAY/ FLOODPLAN

LEGEND

- WOODLANDS PROTECTED AREA
- WETLANDS PROTECTED AREA
- SLOPES 15% – 25% PROTECTED AREA
- SLOPES OVER 25% PROTECTED AREA
- WETLANDS
- MINIMUM COMPACTION AREA
- FLOODPLAINS PROTECTED AREA
- ***WATERBODY PROTECTED AREA***

SENSITIVE NATURAL RESOURCES TABLE

EXISTING NATURAL SENSITIVE RESOURCE	MAPPED? YES/NO/N/A	TOTAL AREA (AC.)	PROTECTED AREA (AC.)
WATERBODIES	YES	***0.01***	***0.01***
FLOODPLAINS	YES	***0.38***	***0.00***
RIPARIAN AREAS	N/A	0.00	0.00
WETLANDS	YES	0.00	0.00
WOODLANDS	YES	0.00	0.00
NATURAL DRAINAGE WAYS	YES	0.00	0.00
STEEP SLOPES, 15%–25%	N/A	0.00	0.00
STEEP SLOPES, OVER 25%	N/A	0.00	0.00
OTHER:			
OTHER:			
TOTAL EXISTING:		***0.01***	***0.01***

SEE DEP STANDARD WORKSHEET 2 IN THE POST CONSTRUCTION STORMWATER MANAGEMENT COMPUTATIONS.

GRAPHIC SCALE
50 25 0 50
SCALE IN FEET
1 inch = 50 ft.

ALARIC J. BUSHER REG NO. PE 60320

BL Companies
ARCHITECTURE
ENGINEERING
ENVIRONMENTAL
LAND SURVEYING

REVISIONS

NO.	DATE	BY	DESCRIPTION	W.O. NO.	CHK.	APP.
0	08/28/2015	BL	ISSUED FOR PADEP PERMIT SUBMITTAL	W01161499	DAK	AJB
1	12/02/2015	BL	ISSUED FOR PADEP RESUBMITTAL	W01161499	DAK	AJB
3	03/28/2016	BL	ISSUED FOR PADEP RESUBMITTAL	W01161499	AJB	AJB
4	***Oct. 2016***	***BL***	***PADEP TECHNICAL DEFICIENCY RESPONSE #1***	***W01161499***	***AJB***	***AJB***

TRANSCONTINENTAL GAS PIPE LINE COMPANY, LLC
ATLANTIC SUNRISE PROJECT– PROPOSED 30" NATURAL GAS PIPELINE
POST CONSTRUCTION STORMWATER MANAGEMENT PLANS FOR NORTH DIAMOND REGULATOR STATION & ASSOCIATED PERMANENT ACCESS ROADS
LEHMAN TOWNSHIP, LUZERNE COUNTY, PENNSYLVANIA
SENSITIVE RESOURCES MAP

Williams

DRAWN BY: JEC	DATE: 04/03/15	ISSUED FOR BID:		SCALE:	AS NOTED
CHECKED BY: AJB	DATE: 04/03/15	ISSUED FOR CONSTRUCTION:		REVISION:	4
APPROVED BY: AJB	DATE: 07/17/15	DRAWING NUMBER:	(36–7935)MF–1A–9	SHEET	2 OF 8
WO: 1161499					

Drawn By & Date/Time: hthomas Nov 11, 2016 – 12:00pm
Drawing Location & Name: G:\JOBS14\14C\14C4909\DWG\010-CPLN\FRS_PCSM14C4909(10)_NDIAMOND.dwg

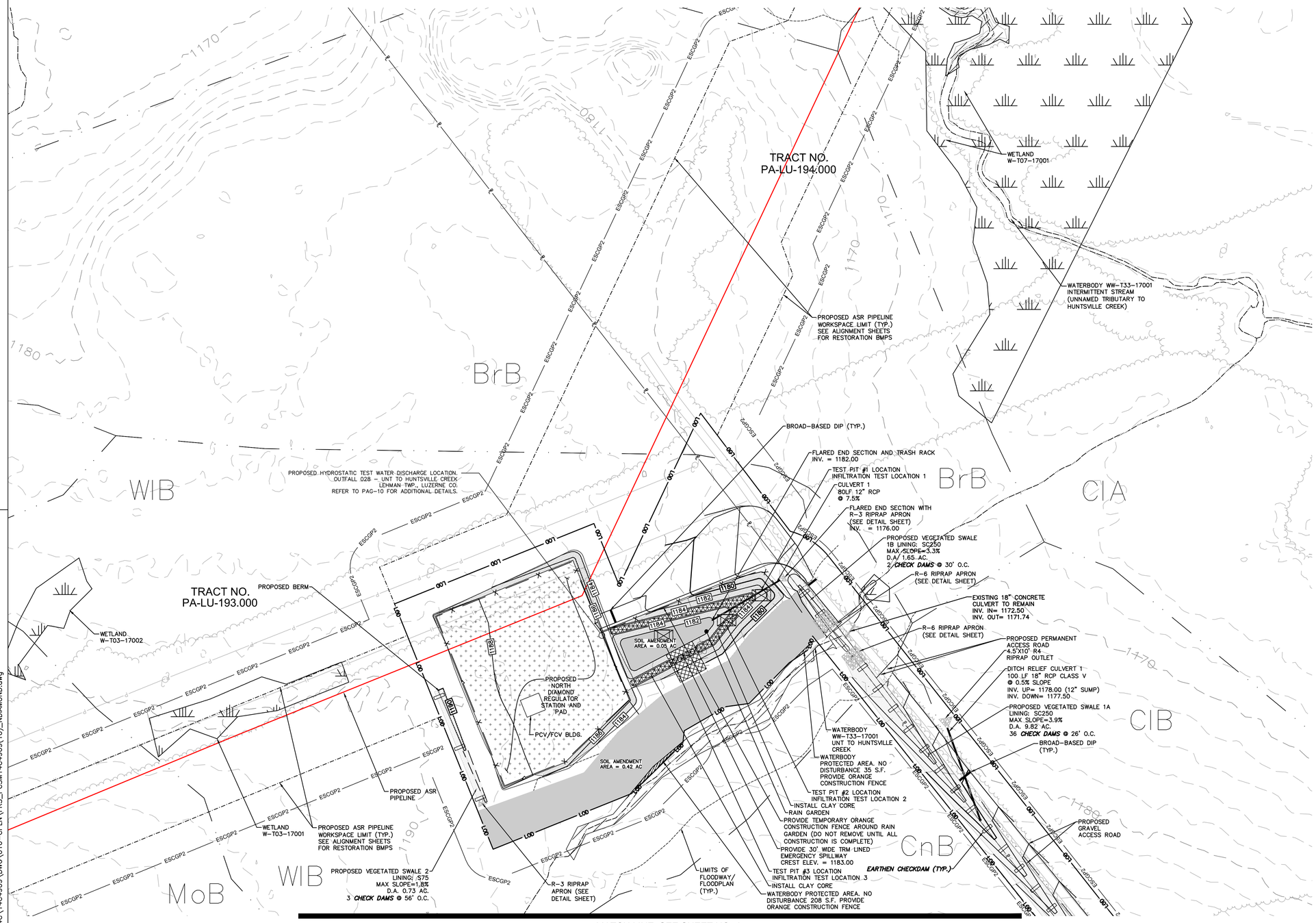

MATCH LINE: SEE SHEET NO. 4

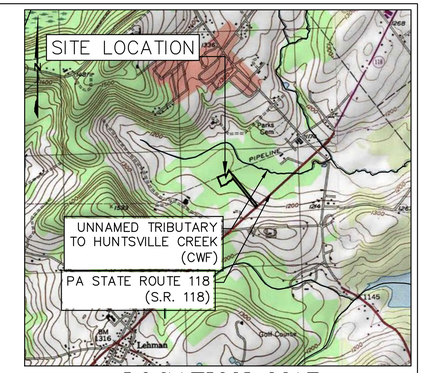

LOCATION MAP

USGS HARVEYS LAKE QUADRANGLE
SCALE: 1"=2,000'

ESCGP-2 PERMIT TABLE

LIMIT OF PERMIT BOUNDARY/STUDY AREA	3.76
LIMIT OF DISTURBANCE	3.76
AREA OF PROTECTED/ SENSITIVE VALUE FEATURES	*0.01*
AREA OF RIPARIAN FOREST BUFFER PROTECTION	0.00
AREA OF MINIMUM DISTURBANCE/REDUCED GRADING	0.00
IMPERVIOUS AREA (ACCESS ROADS & PAD)	1.04
IMPERVIOUS AREA CONTROLLED BY BMPS	1.04

PROPOSED FEATURES

- 1460 — PROPOSED MAJOR CONTOUR (10' INTERVAL)
- PROPOSED MINOR CONTOUR (2' INTERVAL)
- PROPOSED MINOR CONTOUR (1' INTERVAL)
- LOD — LIMIT OF DISTURBANCE (NORTH DIAMOND REGULATOR STATION)
- LIMIT OF WORKSPACE (OVERALL PIPELINE PROJECT)
- ESCGP2 — ESCGP-2 PERMIT BOUNDARY
- X — X — FENCING
- CENTERLINE GAS PIPELINE
- SWALE LINING
- EROSION CONTROL BLANKET
- ROCK OUTLET/RIPRAP APRON
- SOIL AMENDMENT AREA
- TRM LINING
- CLAY CORE LIMITS
- TEST PIT LOCATION
- INFILTRATION TEST LOCATION
- *DISCONNECTED IMPERVIOUS AREA*
- *WATERBODY PROTECTED AREA*

***NOTE:* WITHOUT APPROVAL FROM THE CONSERVATION DISTRICT OR PADEP OWNER/OPERATOR SHALL NOT INSTALL INLETS OR OTHER STORMWATER COLLECTION DEVICES, SO AS TO MAINTAIN DISCONNECTION OF GRAVEL AREAS FROM STORM SEWERS. OWNER/OPERATOR SHALL NOT PAVE GRAVEL AREAS WITHOUT APPROVAL FROM THE CONSERVATION DISTRICT OR PADEP, SO AS TO MAINTAIN REDUCED PARKING AREA IMPERVIOUSNESS.**

- 1460 — EXISTING MAJOR CONTOUR (10' INTERVAL)
- EXISTING MINOR CONTOUR (2' INTERVAL)
- LIMITS OF FLOODWAY/ FLOODPLAN

RECEIVING WATERCOURSE - CHAPTER 93 DESIGNATION

THE RECEIVING WATERCOURSE IS UNNAMED TRIBUTARY TO HUNTSVILLE CREEK CWF
APPROXIMATE DISTANCE FROM SITE TO UNT TO HUNTSVILLE CREEK: ±500 FT (NORTHEAST)

SITE SOIL TYPES

BrB	BRACEVILLE GRAVELLY LOAM, 3 TO 8 PERCENT SLOPES
CIB	CHIPPEWA SILT LOAM, 3 TO 8 PERCENT SLOPES
CnB	CHIPPEWA SILT LOAM, 0 TO 8 PERCENT SLOPES
LaB	LACKAWANNA CHANNERY SILT LOAM, 3 TO 8 PERCENT SLOPES
WlB	WELLSBORO CHANNERY SILT LOAM, 3 TO 8 PERCENT SLOPES
WlC	WELLSBORO CHANNERY SILT LOAM, 8 TO 15 PERCENT SLOPES

GRAPHIC SCALE
50 25 0 50
SCALE IN FEET
1 inch = 50 ft.

CONSHOHOCKEN, PA — ALARIC JAMES BUSHER — REGISTERED PROFESSIONAL ENGINEER — NO. PE-60320 — COMMONWEALTH OF PENNSYLVANIA

ALARIC J. BUSHER REG NO. PE 60320

BL Companies — ARCHITECTURE ENGINEERING ENVIRONMENTAL LAND SURVEYING

REVISIONS

NO.	DATE	BY	DESCRIPTION	W.O. NO.	CHK.	APP.
0	08/28/2015	BL	ISSUED FOR PADEP PERMIT SUBMITTAL	W01161499	DAK	AJB
1	12/02/2015	BL	ISSUED FOR PADEP RESUBMITTAL	W01161499	DAK	AJB
3	03/28/2016	BL	ISSUED FOR PADEP RESUBMITTAL	W01161499	AJB	AJB
4	*Oct. 2016*	*BL*	*PADEP TECHNICAL DEFICIENCY RESPONSE #1*	*W01161499*	*AJB*	*AJB*

TRANSCONTINENTAL GAS PIPE LINE COMPANY, LLC
ATLANTIC SUNRISE PROJECT– PROPOSED 30" NATURAL GAS PIPELINE
POST CONSTRUCTION STORMWATER MANAGEMENT PLANS FOR NORTH
DIAMOND REGULATOR STATION & ASSOCIATED PERMANENT ACCESS ROADS
LEHMAN TOWNSHIP, LUZERNE COUNTY, PENNSYLVANIA
POST CONSTRUCTION STORMWATER MANAGEMENT PLAN

Williams

DRAWN BY: JEC	DATE: 04/03/15	ISSUED FOR BID:		SCALE:	AS NOTED
CHECKED BY: AJB	DATE: 04/03/15	ISSUED FOR CONSTRUCTION:		REVISION:	4
APPROVED BY: AJB	DATE: 07/17/15	DRAWING NUMBER:	(36–7935)MF–1A–9	SHEET 3	OF 8
WO: 1161499					

Drawn By & Date/Time: hthomas Nov 11, 2016 – 12:00pm
Drawing Location & Name: G:\JOBS14\14C\14C4909\DWG\010-CPLN\FRS_PCSM14C4909(10)_NDIAMOND.dwg

MATCH LINE: SEE SHEET NO. 3

3.75'X8' R4 RIPRAP OUTLET

DITCH RELIEF CULVERT 2
50 LF 15" RCP @ 1.0% SLOPE
INV. UP= 1187.50 (6" SUMP)
INV. DOWN = 1187.00

EARTHEN CHECKDAM (TYP.)

EXISTING DIRT ROAD

PROPOSED GRAVEL ACCESS ROAD

PROPOSED VEGETATED SWALE 1A
LINING: SC250
MAX. SLOPE=3.9%
D.A. 9.82 AC.

3.75'X8' R4 RIPRAP OUTLET

DITCH RELIEF CULVERT 3
50 LF 15" RCP @ 1.0% SLOPE
INV. UP= 1197.50 (6" SUMP)
INV. DOWN = 1197.00

EARTHEN CHECKDAM (TYP.)

TRACT NO.
PA-LU-194.000

PROVIDE RELOCATED GATE

PA STATE ROUTE 118 (S.R. 118)

EXISTING 18" CONCRETE CULVERT
INV. IN= 1211.76
INV. OUT= 1210.38

EXISTING INLET

CnB CIB WIC WIC LaB MoB LaB OIC

1190 1180 1200 1210 1220 1230 1240 1250

GRAPHIC SCALE
50 25 0 50
SCALE IN FEET
1 inch = 50 ft.

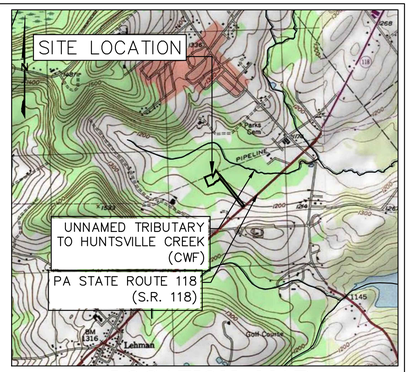

LOCATION MAP

USGS HARVEYS LAKE QUADRANGLE
SCALE: 1"=2,000'

SITE SOIL TYPES

BrB	BRACEVILLE GRAVELLY LOAM, 3 TO 8 PERCENT SLOPES
CIB	CHIPPEWA SILT LOAM, 3 TO 8 PERCENT SLOPES
CnB	CHIPPEWA SILT LOAM, 0 TO 8 PERCENT SLOPES
LaB	LACKAWANNA CHANNERY SILT LOAM, 3 TO 8 PERCENT SLOPES
WIB	WELLSBORO CHANNERY SILT LOAM, 3 TO 8 PERCENT SLOPES
WIC	WELLSBORO CHANNERY SILT LOAM, 8 TO 15 PERCENT SLOPES

PROPOSED FEATURES

- 1460 — PROPOSED MAJOR CONTOUR (10' INTERVAL)
- PROPOSED MINOR CONTOUR (2' INTERVAL)
- LOD — LIMIT OF DISTURBANCE (NORTH DIAMOND REGULATOR STATION)
- LIMIT OF WORKSPACE (OVERALL PIPELINE PROJECT)
- ESCGP2 — ESCGP-2 PERMIT BOUNDARY
- X — X — FENCING
- CENTERLINE GAS PIPELINE
- SWALE LINING
- EROSION CONTROL BLANKET
- 1.5"DIA.CLR NO.1 STONE — ROCK OUTLET/RIPRAP APRON
- SOIL AMENDMENT AREA
- TEST PIT LOCATION
- INFILTRATION TEST LOCATION

NOTE: SEE SENSITIVE RESOURCES MAP FOR AREAS TO BE PROTECTED DURING CONSTRUCTION.

- 1460 — EXISTING MAJOR CONTOUR (10' INTERVAL)
- EXISTING MINOR CONTOUR (2' INTERVAL)

COMMONWEALTH OF PENNSYLVANIA
REGISTERED PROFESSIONAL
ALARIC JAMES BUSHER
RS-PE-60320

ALARIC J. BUSHER REG NO. PE 60320

BL Companies — ARCHITECTURE ENGINEERING ENVIRONMENTAL LAND SURVEYING

REVISIONS

NO.	DATE	BY	DESCRIPTION	W.O. NO.	CHK.	APP.
0	06/28/2015	BL	ISSUED FOR PADEP PERMIT SUBMITTAL	W01161499	DAK	AJB
1	12/02/2015	BL	ISSUED FOR PADEP RESUBMITTAL	W01161499	DAK	AJB
3	03/28/2016	BL	ISSUED FOR PADEP RESUBMITTAL	W01161499	AJB	AJB
4	Oct. 2016	BL	PADEP TECHNICAL DEFICIENCY RESPONSE #1	W01161499	AJB	AJB

TRANSCONTINENTAL GAS PIPE LINE COMPANY, LLC
ATLANTIC SUNRISE PROJECT– PROPOSED 30" NATURAL GAS PIPELINE
POST CONSTRUCTION STORMWATER MANAGEMENT PLANS FOR NORTH DIAMOND REGULATOR STATION & ASSOCIATED PERMANENT ACCESS ROADS
LEHMAN TOWNSHIP, LUZERNE COUNTY, PENNSYLVANIA
POST CONSTRUCTION STORMWATER MANAGEMENT PLAN

Williams

DRAWN BY: JEC	DATE: 04/03/15	ISSUED FOR BID:		SCALE:	AS NOTED
CHECKED BY: AJB	DATE: 04/03/15	ISSUED FOR CONSTRUCTION:		REVISION:	4
APPROVED BY: AJB	DATE: 07/17/15	DRAWING NUMBER:	(36–7935)MF–1A–9	SHEET 4	OF 8
WO: 1161499					

Drawn By & Date/Time: hthomas Nov 11, 2016 – 12:00pm
Drawing Location & Name: G:\JOBS14\14C\14C4909\DWG\010-CPLN\FRS_PCSM14C4909(10)_NDIAMOND.dwg

PCSM STANDARD NOTES

PERMIT TERMINATION
UPON PERMANENT STABILIZATION OF THE EARTH DISTURBANCE ACTIVITY UNDER § 102.22(A)(2) (RELATING TO PERMANENT STABILIZATION), AND INSTALLATION OF BMPS IN ACCORDANCE WITH AN APPROVED PLAN PREPARED AND IMPLEMENTED IN ACCORDANCE WITH §§ 102.4 AND 102.8 (RELATING TO EROSION AND SEDIMENT CONTROL REQUIREMENTS; AND PCSM REQUIREMENTS), THE PERMITTEE OR CO-PERMITTEE SHALL SUBMIT A NOTICE OF TERMINATION TO THE DEPARTMENT OR CONSERVATION DISTRICT.

THE NOTICE OF TERMINATION MUST INCLUDE:
(1) THE FACILITY NAME, ADDRESS AND LOCATION.
(2) THE OPERATOR NAME AND ADDRESS.
(3) THE PERMIT NUMBER.
(4) THE REASON FOR PERMIT TERMINATION.
(5) IDENTIFICATION OF THE PERSONS WHO HAVE AGREED TO AND WILL BE RESPONSIBLE FOR LONG-TERM OPERATION AND MAINTENANCE OF THE PCSM BMPS IN ACCORDANCE WITH § 102.8(M) AND PROOF OF COMPLIANCE WITH § 102.8(M)(2).

PCSM REQUIREMENTS

PCSM REPORTING AND RECORD KEEPING: THE PCSM PLAN, INSPECTION REPORTS AND MONITORING RECORDS SHALL BE AVAILABLE FOR REVIEW AND INSPECTION BY THE DEPARTMENT OR THE CONSERVATION DISTRICT.

LICENSED PROFESSIONAL OVERSIGHT OF CRITICAL STAGES: A LICENSED PROFESSIONAL OR A DESIGNEE SHALL BE PRESENT ONSITE AND BE RESPONSIBLE DURING CRITICAL STAGES OF IMPLEMENTATION OF THE APPROVED PCSM PLAN. THE CRITICAL STAGES MAY INCLUDE THE INSTALLATION OF UNDERGROUND TREATMENT OR STORAGE BMPS, STRUCTURALLY ENGINEERED BMPS, OR OTHER BMPS AS DEEMED APPROPRIATE BY THE DEPARTMENT OR THE CONSERVATION DISTRICT.

FINAL CERTIFICATION: THE PERMITTEE SHALL INCLUDE WITH THE NOTICE OF TERMINATION "RECORD DRAWINGS" WITH A FINAL CERTIFICATION STATEMENT FROM A LICENSED PROFESSIONAL, WHICH READS AS FOLLOWS:
"I (NAME) DO HEREBY CERTIFY PURSUANT TO THE PENALTIES OF 18 PA.C.S.A. § 4904 TO THE BEST OF MY KNOWLEDGE, INFORMATION AND BELIEF, THAT THE ACCOMPANYING RECORD DRAWINGS ACCURATELY REFLECT THE AS-BUILT CONDITIONS, ARE TRUE AND CORRECT, AND ARE IN CONFORMANCE WITH CHAPTER 102 OF THE RULES AND REGULATIONS OF THE DEPARTMENT OF ENVIRONMENTAL PROTECTION AND THAT THE PROJECT SITE WAS CONSTRUCTED IN ACCORDANCE WITH THE APPROVED PCSM PLAN, ALL APPROVED PLAN CHANGES AND ACCEPTED CONSTRUCTION PRACTICES."

(1) THE PERMITTEE SHALL RETAIN A COPY OF THE RECORD DRAWINGS AS A PART OF THE APPROVED PCSM PLAN.
(2) THE PERMITTEE SHALL PROVIDE A COPY OF THE RECORD DRAWINGS AS A PART OF THE APPROVED PCSM PLAN TO THE PERSON IDENTIFIED IN THIS SECTION AS BEING RESPONSIBLE FOR THE LONG-TERM OPERATION AND MAINTENANCE OF THE PCSM BMPS.

PCSM LONG TERM OPERATIONS AND MAINTENANCE REQUIREMENTS

UNTIL THE PERMITTEE OR CO-PERMITTEE HAS RECEIVED WRITTEN APPROVAL OF A NOTICE OF TERMINATION, THE PERMITTEE OR CO-PERMITTEE WILL REMAIN RESPONSIBLE FOR COMPLIANCE WITH THE PERMIT TERMS AND CONDITIONS INCLUDING LONG-TERM OPERATION AND MAINTENANCE OF ALL PCSM BMPS ON THE PROJECT SITE AND IS RESPONSIBLE FOR VIOLATIONS OCCURRING ON THE PROJECT SITE. THE DEPARTMENT OR CONSERVATION DISTRICT WILL CONDUCT A FINAL INSPECTION AND APPROVE OR DENY THE NOTICE OF TERMINATION WITHIN 30 DAYS.

THE PERMITTEE OR CO-PERMITTEE SHALL BE RESPONSIBLE FOR LONG-TERM OPERATION AND MAINTENANCE OF PCSM BMPS UNLESS A DIFFERENT PERSON IS IDENTIFIED IN THE NOTICE OF TERMINATION AND HAS AGREED TO LONG-TERM OPERATION AND MAINTENANCE OF PCSM BMPS.

FOR ANY PROPERTY CONTAINING A PCSM BMP, THE PERMITTEE OR CO-PERMITTEE SHALL RECORD AN INSTRUMENT WITH THE RECORDER OF DEEDS WHICH WILL ASSURE DISCLOSURE OF THE PCSM BMP AND THE RELATED OBLIGATIONS IN THE ORDINARY COURSE OF A TITLE SEARCH OF THE SUBJECT PROPERTY. THE RECORDED INSTRUMENT MUST IDENTIFY THE PCSM BMP, PROVIDE FOR NECESSARY ACCESS RELATED TO LONG-TERM OPERATION AND MAINTENANCE FOR PCSM BMPS AND PROVIDE NOTICE THAT THE RESPONSIBILITY FOR LONG-TERM OPERATION AND MAINTENANCE OF THE PCSM BMP IS A COVENANT THAT RUNS WITH THE LAND THAT IS BINDING UPON AND ENFORCEABLE BY SUBSEQUENT GRANTEES, AND PROVIDE PROOF OF FILING WITH THE NOTICE OF TERMINATION UNDER § 102.7(B)(5) (RELATING TO PERMIT TERMINATION

THE PERSON RESPONSIBLE FOR PERFORMING LONG-TERM OPERATION AND MAINTENANCE MAY ENTER INTO AN AGREEMENT WITH ANOTHER PERSON INCLUDING A CONSERVATION DISTRICT, NONPROFIT ORGANIZATION, MUNICIPALITY, AUTHORITY, PRIVATE CORPORATION OR OTHER PERSON, TO TRANSFER THE RESPONSIBILITY FOR PCSM BMPS OR TO PERFORM LONG-TERM OPERATION AND MAINTENANCE AND PROVIDE NOTICE THEREOF TO THE DEPARTMENT.

A PERMITTEE OR CO-PERMITTEE THAT FAILS TO TRANSFER LONG-TERM OPERATION AND MAINTENANCE OF THE PCSM BMP OR OTHERWISE FAILS TO COMPLY WITH THIS REQUIREMENT SHALL REMAIN JOINTLY AND SEVERALLY RESPONSIBLE WITH THE LANDOWNER FOR LONG-TERM OPERATION AND MAINTENANCE OF THE PCSM BMPS LOCATED ON THE PROPERTY.

CLEAN FILL IS DEFINED AS: UNCONTAMINATED, NON-WATER SOLUBLE, NON-DECOMPOSABLE, INERT, SOLID MATERIAL. THE TERM INCLUDES SOIL, ROCK, STONE, DREDGED MATERIAL, USED ASPHALT, AND BRICK, BLOCK OR CONCRETE FROM CONSTRUCTION AND DEMOLITION ACTIVITIES THAT IS SEPARATE FROM OTHER WASTE AND IS RECOGNIZABLE AS SUCH. THE TERM DOES NOT INCLUDE MATERIALS PLACED IN OR ON THE WATERS OF THE COMMONWEALTH UNLESS OTHERWISE AUTHORIZED. (THE TERM "USED ASPHALT" DOES NOT INCLUDE MILLED ASPHALT OR ASPHALT THAT HAS BEEN PROCESSED FOR RE-USE.)

CLEAN FILL AFFECTED BY A SPILL OR RELEASE OF A REGULATED SUBSTANCE:

FILL MATERIALS AFFECTED BY A SPILL OR RELEASE OF A REGULATED SUBSTANCE STILL QUALIFIES AS CLEAN FILL PROVIDED THE TESTING REVEALS THAT THE FILL MATERIAL CONTAINS CONCENTRATIONS OF REGULATED SUBSTANCES THAT ARE BELOW THE RESIDENTIAL LIMITS IN TABLES FP-1A AND FP-1B FOUND IN THE DEPARTMENT'S POLICY "MANAGEMENT OF FILL."

ANY PERSON PLACING CLEAN FILL THAT HAS BEEN AFFECTED BY A SPILL OR RELEASE OF A REGULATED SUBSTANCE MUST USE FORM FP-001 TO CERTIFY THE ORIGIN OF THE FILL MATERIAL AND THE RESULTS OF THE ANALYTICAL TESTING TO QUALIFY THE MATERIAL AS CLEAN FILL. FORM FP-001 MUST BE RETAINED BY THE OWNER OF THE PROPERTY RECEIVING THE FILL AND MUST BE KEPT ON SITE AND MADE AVAILABLE UPON REQUEST BY THE DEPARTMENT OR AUTHORIZED CONSERVATION DISTRICT. FAILURE TO PRODUCE THE FORM UPON REQUEST MAY RESULT IN THE REVOKING, SUSPENSION OR TERMINATION OF YOUR PERMIT COVERAGE. A COPY OF FORM FP-001 CAN BE FOUND AT THE END OF THESE INSTRUCTIONS.

ENVIRONMENTAL DUE DILIGENCE:
INVESTIGATIVE TECHNIQUES, INCLUDING, BUT NOT LIMITED TO, VISUAL PROPERTY INSPECTIONS, ELECTRONIC DATA BASE SEARCHES, REVIEW OF PROPERTY OWNERSHIP, REVIEW OF PROPERTY USE HISTORY, SANBORN MAPS, ENVIRONMENTAL QUESTIONNAIRES, TRANSACTION SCREENS, ANALYTICAL TESTING, ENVIRONMENTAL ASSESSMENTS OR AUDITS. ANALYTICAL TESTING IS NOT A REQUIRED PART OF DUE DILIGENCE UNLESS VISUAL INSPECTION AND/OR REVIEW OF THE PAST LAND USE OF THE PROPERTY INDICATES THAT THE FILL MAY HAVE BEEN SUBJECTED TO A SPILL OR RELEASE OF REGULATED SUBSTANCE. IF THE FILL MAY HAVE BEEN AFFECTED BY A SPILL OR RELEASE OF A REGULATED SUBSTANCE, IT MUST BE TESTED TO DETERMINE IF IT QUALIFIES AS CLEAN FILL. TESTING SHOULD BE PERFORMED IN ACCORDANCE WITH APPENDIX A OF THE DEPARTMENT'S POLICY "MANAGEMENT OF FILL."

FILL MATERIAL THAT DOES NOT QUALIFY AS CLEAN FILL IS REGULATED FILL. REGULATED FILL IS WASTE AND MUST BE MANAGED IN ACCORDANCE WITH THE DEPARTMENT'S MUNICIPAL OR RESIDUAL WASTE REGULATIONS BASED ON 25 PA. CODE CHAPTERS 287 RESIDUAL WASTE MANAGEMENT OR 271 MUNICIPAL WASTE MANAGEMENT, WHICHEVER IS APPLICABLE.

RECYCLING AND DISPOSAL OF MATERIALS

BUILDING MATERIALS AND OTHER CONSTRUCTION SITE WASTES MUST BE PROPERLY MANAGED AND DISPOSED OF TO REDUCE POTENTIAL FOR POLLUTION TO SURFACE AND GROUND WATERS AS PER 25 PA. CODE § 102.4(B)(5)(xi). PROPER TRASH DISPOSAL, RECYCLING OF MATERIALS, PROPER MATERIALS HANDLING, AND SPILL PREVENTION AND CLEAN-UP REDUCE THE POTENTIAL FOR CONSTRUCTION SITE WASTES TO BE MOBILIZED BY STORMWATER RUNOFF AND CONVEYED TO SURFACE WATERS.

UNDER NO CIRCUMSTANCES MAY EROSION CONTROL BMPS BE USED FOR TEMPORARY STORAGE OF DEMOLITION MATERIALS OR CONSTRUCTION WASTES.

WHEREVER HEAVY EQUIPMENT WILL BE USED DURING CONSTRUCTION OF THE CUTS AND FILLS OR PROPOSED BUILDINGS, A POLLUTION PREVENTION AND CONTINGENCY (PPC) PLAN MUST BE AVAILABLE ON SITE. THE APPLICANT MUST PREPARE AND IMPLEMENT A PPC PLAN WHEN STORING, USING OR TRANSPORTING MATERIALS INCLUDING: FUELS, CHEMICALS, SOLVENTS, PESTICIDES, FERTILIZERS, LIME, PETROCHEMICALS, WASTEWATER, WASH WATER, CORE DRILLING WASTEWATER, CEMENT, SANITARY WASTES, SOLID WASTES, OR HAZARDOUS MATERIALS ONTO, ON, OR FROM THE PROJECT SITE DURING EARTH DISTURBANCE ACTIVITIES. THE PPC PLAN MUST BE AVAILABLE UPON REQUEST BY THE DEPARTMENT OR CONSERVATION DISTRICT. GUIDANCE FOR DEVELOPMENT OF A PPC PLAN CAN BE FOUND IN "GUIDELINES FOR THE DEVELOPMENT AND IMPLEMENTATION OF ENVIRONMENTAL EMERGENCY RESPONSE PLANS" (DOCUMENT #400-2200-001), WHICH CAN BE FOUND IN THE DEPARTMENT'S ELIBRARY AT WWW.DEPWEB.STATE.PA.US.

SILT, SEDIMENT, TRASH, CONSTRUCTION WASTES AND ALL OTHER WASTES GENERATED DURING OPERATION AND MAINTENANCE ACTIVITIES SHALL BE PROPERLY MANAGED AND DISPOSED OF IN ACCORDANCE WITH LOCAL, STATE AND FEDERAL REQUIREMENTS.

ALL APPLICABLE FEDERAL, STATE, AND LOCAL LAWS AND REGULATIONS MUST BE FOLLOWED IN THE USE, HANDLING, AND DISPOSAL OF POTENTIALLY HAZARDOUS MATERIALS.

RESPONSIBLE PARTY

OPERATION AND MAINTENANCE SHALL BE THE RESPONSIBILITY OF WILLIAMS (APPLICANT).

OPERATIONS AND MAINTENANCE PROGRAM
PERMANENT STORMWATER FACILITIES

THE PERMIT APPLICANT SHALL BE RESPONSIBLE FOR THE MAINTENANCE OF PERMANENT STORMWATER FACILITIES LOCATED ON THE SUBJECT PROPERTIES. PERMANENT MAINTENANCE OF THE STORM SYSTEM AFTER ACCEPTANCE WILL PRIMARILY CONSIST OF ROUTINE CLEANING OF ACCUMULATED SEDIMENT AND DEBRIS BY FACILITY STAFF OR PRIVATE CONTRACTORS. THE SPECIFIC MAINTENANCE STEPS AND SCHEDULE ARE LISTED BELOW:

1. *RAIN GARDEN FACILITY*
   INSPECT RAIN GARDEN FACILITY ANNUALLY AND INSPECT SOIL AND REMOVE LITTER AND DEBRIS AS NEEDED. INSPECT TWICE A YEAR FOR SEDIMENT BUILDUP, EROSION AND VEGETATIVE CONDITIONS. REMOVE AND REPLACE DEAD AND DISEASED VEGETATION. ANY LITTER, DEBRIS, SEDIMENT, VEGETATION, OR OTHER ITEMS REMOVED DURING MAINTENANCE ACTIVITIES WILL BE DISPOSED OF IN A MANNER CONSISTENT WITH THE ESCGP-2 REQUIREMENTS.

2. *VEGETATED SWALES WITH EARTHEN CHECK DAMS*
   VEGETATED SWALES WITH EARTHEN CHECK DAMS ARE TO BE INSPECTED ANNUALLY FOR SEDIMENT, BUILD-UP, EROSION DEBRIS, AND DAMAGE DUE TO TRAFFIC. DITCHES SHOULD BE MAINTAINED TO ENSURE THAT THE SPECIFIED DESIGN DIMENSIONS AND VEGETATIVE LINING ARE AVAILABLE AT ALL TIMES. NO MORE THAN ONE-THIRD OF THE SHOOT (GRASS LEAF) SHALL BE REMOVED IN ANY MOWING. GRASS HEIGHT SHALL BE MAINTAINED BETWEEN 3 AND 6 INCHES UNLESS OTHERWISE SPECIFIED. EXCESS VEGETATION SHALL BE REMOVED FROM PERMANENT CHANNELS TO ENSURE SUFFICIENT CHANNEL CAPACITY. ANY LITTER, DEBRIS, SEDIMENT, VEGETATION, OR OTHER ITEMS REMOVED DURING MAINTENANCE ACTIVITIES WILL BE DISPOSED OF IN A MANNER CONSISTENT WITH THE ESCGP-2 REQUIREMENTS.

3. *PROTECT SENSITIVE/SPECIAL VALUE FEATURES*
   PROTECTED AREAS SHALL REMAIN UNDISTURBED AFTER CONSTRUCTION ACTIVITIES CEASE. ORANGE CONSTRUCTION FENCE WILL BE USED TO PROTECT SPECIAL VALUE/SENSITIVE AREAS DURING CONSTRUCTION.

4. *DISCONNECTION FROM STORM SEWERS*
   DISCONNECTED IMPERVIOUS AREAS SHALL CONTINUE TO BE DIRECTED TO INFILTRATION AREAS AND VEGETATED SWALES AS SHOWN ON THE POST CONSTRUCTION STORMWATER MANAGEMENT PLANS. INFILTRATION AREAS AND VEGETATED SWALES SHALL BE MAINTAINED AS INDICATED ON THE POST CONSTRUCTION STORMWATER MANAGEMENT PLANS.

5. *SOIL AMENDMENT AND RESTORATION*
   RESTRICT VEHICLE ACCESS. MONITOR WATER DRAW DOWN TIME IN INFILTRATION AREAS AND SCARIFY SUBSOIL TO A DEPTH OF 1' AND REPLACE AMENDED SOILS IF DEWATERING TIME INCREASES TO MORE THAN 3 DAYS. MAINTAIN INFILTRATION AREAS AS INDICATED ON THE POST CONSTRUCTION STORMWATER MANAGEMENT PLANS.

6. *REDUCE PARKING AREA IMPERVIOUSNESS*
   GRAVEL AREAS WILL BE MAINTAINED IN GOOD CONDITION AND WILL NOT BE PAVED WITHOUT OBTAINING PRIOR APPROVAL FROM THE DEP OR THE COUNTY CONSERVATION DISTRICT.

7. *REFER TO THE TABLES BELOW FOR THE OPERATION AND MAINTENANCE OF POST CONSTRUCTION BEST MANAGEMENT PRACTICES.*

8. *ANNUAL CERTIFICATION OF MAINTENANCE PROCEDURES*
   THE FACILITY SHALL MAINTAIN A CHECKLIST WHENEVER THE STORM SYSTEM IS INSPECTED AND CLEANED. AN ANNUAL LIST OF INSPECTIONS AND MAJOR CLEANING OPERATIONS AND REPAIRS (PUMPING, SWEEPING PARKING LOTS, CLEANING CATCH BASIN, ETC.) SHALL BE MAINTAINED. THE LOCAL CCD OR ENFORCEMENT OFFICIALS SHALL HAVE ACCESS TO THOSE RECORDS.

9. *ESCGP2*
   THE FACILITY OWNER AND OPERATOR SHALL ENSURE COMPLIANCE WITH ESCGP-2 REQUIREMENTS BY MEETING ALL ONGOING RECORD, KEEPING MAINTENANCE, AND OTHER APPLICABLE ESCGP-2 AND PADEP PERMIT CONDITIONS

VEGETATED SWALES WITH CHECK DAMS

OPERATION & MAINTENANCE PROCEDURES	
ACTIVITY	SCHEDULE
PLANT ALTERNATIVE GRASS SPECIES IN THE EVENT OF UNSUCCESSFUL ESTABLISHMENT. RESEED BARE AREAS; ROTOTILL OR CULTIVATE THE SURFACE OF THE SAND/SOIL BED OF DRY SWALES IF THE SWALE DOES NOT DRAW DOWN WITHIN 48 HOURS. WATER DURING DRY PERIODS, FERTILIZE, AND APPLY PESTICIDES WHEN NECESSARY. REMOVE SEDIMENT BUILD-UP WITHIN THE BOTTOM OF THE SWALE ONCE IT HAS ACCUMULATED TO 25% OF THE ORIGINAL DESIGN VOLUME, OR ONCE IT HAS COVERED VEGETATION.	AS NEEDED
INSPECT AND CORRECT EROSION PROBLEMS, DAMAGE TO VEGETATION, DAMAGE TO ***CHECK DAMS***, AND SEDIMENT AND DEBRIS ACCUMULATION. INSPECT GRASS ALONG SIDE SLOPES FOR EROSION, RILLS, OR GULLIES, & CORRECT. MOW AND TRIM VEGETATION TO ENSURE SAFETY, PROPER SWALE OPERATION, OR TO SUPPRESS WEEDS AND INVASIVE VEGETATION. INSPECT FOR POOLS OF STANDING WATER; DEWATER & DISCHARGE TO AN APPROVED LOCATION, RESTORE TO DESIGN GRADE. INSPECT FOR UNIFORMITY IN CROSS-SECTION & LONGITUDINAL SLOPE, CORRECT AS NEEDED. INSPECT SWALE INLET AND OUTLET FOR SIGNS OF EROSION OR BLOCKAGE, CORRECT AS NEEDED.	ANNUAL
INSPECT SWALE IMMEDIATELY AFTER SPRING MELT. REMOVE RESIDUALS AND REPLACE DAMAGED VEGETATION. IF ROADSIDE OR PARKING LOT RUNOFF IS DIRECTED TO THE SWALE, MULCHING &/OR SOIL AERATION MAY BE REQUIRED IN THE SPRING TO RESTORE SOIL STRUCTURE & MOISTURE CAPACITY & TO REDUCE THE IMPACT OF DEICING AGENTS. USE NONTOXIC, ORGANIC DEICING AGENTS. PLANT SALT TOLERANT VEGETATION IN SWALES.	***ANNUAL – SPRING***

SENSITIVE/SPECIAL VALUE FEATURES

OPERATION & MAINTENANCE PROCEDURES	
ACTIVITY	*SCHEDULE*
REPLANT SUITABLE SPECIES IN THE EVENT OF DEAD OR DYING VEGETATION. RESEED BARE AREAS AND INSTALL APPROPRIATE EROSION CONTROLS WHEN SOIL IS EXPOSED.	***AS NEEDED***
INSPECT AND ENSURE PROTECTED AREAS REMAIN UNDISTURBED AFTER CONSTRUCTION ACTIVITIES CEASE.	***BIANNUALLY***

DISCONNECTION FROM STORM SEWERS

OPERATION & MAINTENANCE PROCEDURES	
ACTIVITY	*SCHEDULE*
INSPECT AND MAINTAIN GRADE TO ENSURE DISCONNECTED IMPERVIOUS AREAS CONTINUE TO BE DIRECTED TO INFILTRATION AREAS AND VEGETATED SWALES	***AS NEEDED***

BIORETENTION/RAIN GARDEN

OPERATION & MAINTENANCE PROCEDURES	
ACTIVITY	SCHEDULE
INSPECT AND CORRECT EROSION PROBLEMS, DAMAGE TO VEGETATION, AND SEDIMENT AND DEBRIS ACCUMULATION. INSPECT GRASS ALONG SIDE SLOPES FOR EROSION, RILLS, OR GULLIES, & CORRECT. MOW AND TRIM VEGETATION TO ENSURE SAFETY, PROPER SWALE OPERATION, OR TO SUPPRESS WEEDS AND INVASIVE VEGETATION. INSPECT FOR POOLS OF STANDING WATER; DEWATER & DISCHARGE TO AN APPROVED LOCATION, RESTORE TO DESIGN GRADE. INSPECT FOR UNIFORMITY IN CROSS-SECTION & LONGITUDINAL SLOPE, CORRECT AS NEEDED. INSPECT SWALE INLET AND OUTLET FOR SIGNS OF EROSION OR BLOCKAGE, CORRECT AS NEEDED.	ANNUAL
INSPECT OUTLET CONTROL DEVICES AFTER EVERY MAJOR RAINFALL EVENT (>1 IN.) TO ENSURE FREE FLOW.	AS NEEDED
INSPECT SOIL & REPAIR ERODED AREAS, REMOVE LITTER AND DEBRIS	***AS NEEDED***
INSPECT FOR SEDIMENT BUILDUP, EROSION, VEGETATIVE CONDITIONS, REMOVE & REPLACE DEAD & DISEASED VEGETATION.	TWICE PER YEAR
GENERAL MAINTENANCE NOTES: 1. WHILE VEGETATION IS BEING ESTABLISHED, PRUNING AND WEEDING MAY BE REQUIRED. 2. DURING PERIODS OF EXTENDED DROUGHT, BIORETENTION AREAS MAY REQUIRE WATERING.	

SOIL AMENDMENT & RESTORATION

OPERATION & MAINTENANCE PROCEDURES	
ACTIVITY	*SCHEDULE*
RESTRICT VEHICLE ACCESS	***AT ALL TIMES***
ENSURE THAT INFILTRATION AREAS DEWATER BETWEEN STORMS. SCARIFY SUBSOILS TO A DEPTH OF 1' AND REPLACE AMENDED SOILS IF DEWATERING TIME INCREASES TO MORE THAN THREE DAYS.	***ANNUAL***
INSPECT AND MAINTAIN INFILTRATION AREAS	***AS NEEDED***
GENERAL MAINTENANCE NOTES: ***THE SOIL RESTORATION PROCESS MAY NEED TO BE REPEATED OVER TIME, DUE TO COMPACTION BY USE AND/OR SETTLING.***	

PARKING AREA IMPERVIOUSNESS

OPERATION & MAINTENANCE PROCEDURES	
ACTIVITY	*SCHEDULE*
INSPECT AND MAINTAIN GRAVEL AREAS	***AS NEEDED***

SOIL AMENDMENT NOTES

NOTES:
1. ***CONTRACTOR SHALL VERIFY THAT THE AMENDED SOIL PROVIDES AN INFILTRATION RATE OF 2.0 in/HR OR GREATER. CONTRACTOR TO CONDUCT IN-SITU TESTING OF INFILTRATION RATES***
2. ***WHERE LAYERS OF FILL THAT VARY IN GRADATION ARE ADJACENT TO EACH OTHER, A FILTER FABRIC BARRIER SHOULD BE USED TO PREVENT MIGRATION OF FINES. (I.E. WHERE A FINER GRAINED SELECT FILL IS PLACE ON TOP OF, OR BELOW, AN OPEN-GRADED STONE FILL.)***
3. ***AMENDED SOIL MIX SHALL CONSIST OF 33% ORGANIC MATTER (COMPOST) AND 67% SOIL BASE (TOPSOIL). SOIL SHALL HAVE A CLAY CONTENT OF LESS THAN 10% AND BE FREE OF TOXIC SUBSTANCES.***
4. ***CONSTRUCT ONLY AFTER UPSTREAM AREAS HAVE BEEN STABILIZED OR DIVERT RUNOFF DURING CONSTRUCTION.***
5. ***EXCAVATE TO PROPOSED INVERT ELEVATION AND SCARIFY EXISTING SOILS, DO NOT COMPACT IN-SITU SOILS.***
6. ***BACKFILL WITH AMENDED SOIL. LIGHT HAND TAMPING IS ACCEPTABLE. OVERFILL AS REQUIRED TO ACCOUNT FOR SETTLEMENT.***
7. ***UPON COMPLETION, SEED AND MULCH THE INVERT USING THE DETENTION BASIN FLOOD SEED MIXTURE: ERNMX-122 (FACW WETLAND MEADOW MIX) AT 1/2 POUND PER 1,000 SQUARE FEET ERNMX-131 (OBL WETLAND MIX) AT 1/2 POUND PER 1,000 SQUARE FEET.***

AMENDED SOIL PARAMETERS			
SOIL TEXTURE	IDEAL BULK DENSITIES g/cm³	BULK DENSITIES THAT MAY AFFECT ROOT GROWTH g/cm³	BULK DENSITIES THAT RESTRICT ROOT GROWTH g/cm³
SANDS, LOAMY SANDS	< 1.60	1.69	1.80
SANDY LOAMS, LOAMS	< 1.40	1.63	1.80
SANDY CLAY LOAMS, LOAMS, CLAY LOAMS	< 1.40	1.60	1.75
SILT, SILT LOAMS	< 1.30	1.60	1.75
SOIL LOAMS, SILTY CLAY LOAMS	< 1.10	1.55	1.65
SANDY CLAYS, SILTY CLAYS, SOME CLAY LOAMS (35-45% CLAY)	< 1.10	1.49	1.58
CLAYS (> 45% CLAY)	< 1.10	1.39	1.47

GENERAL LANDSCAPE NOTES

1. GUARANTEE: GUARANTEE ALL PLANTS AND LAWNS FOR A MINIMUM OF 1 YEAR TO BE ALIVE AND IN VIGOROUS GROWING CONDITION AT THE END OF THE GUARANTEE PERIOD. THE GUARANTEE PERIOD FOR ALL PLANTS SHALL BEGIN UPON APPROVAL AS SPECIFIED UNDER SUBSTANTIAL COMPLETION. PLANT MATERIALS AND LAWNS APPROVED IN THE SPRING SHALL BE ALIVE AND IN SATISFACTORY GROWTH ON JUNE 1 OF THE FOLLOWING YEAR; PLANTING DONE IN LATE FALL (AFTER NOVEMBER 1ST) SHALL BE MAINTAINED AND GUARANTEED UNTIL THE SPRING'S LEAFING AFTER THE SECOND YEAR. REPLACEMENTS: ALL PLANTS SHALL BE FREE OF DEAD OR DYING BRANCHES AND BRANCH TIPS, AND SHALL BEAR FOLIAGE OF A NORMAL DENSITY, SIZE AND COLOR. PROMPTLY REMOVE DEAD, UNSIGHTLY, UNHEALTHY, OR EXCESSIVELY PRUNED PLANTS. THESE AND ANY PLANTS MISSING DUE TO THE CONTRACTOR'S NEGLIGENCE, SHALL BE REPLACED OR ADDED WITH THE SAME KIND AND SIZE AS ORIGINALLY SPECIFIED AS SOON AS CONDITIONS PERMIT. METHOD OF REPLACEMENT SHALL BE THE SAME AS SPECIFIED FOR THE ORIGINAL PLANTING WITH REPLACEMENTS MATCHING ADJACENT SPECIMENS OF THE SAME SPECIES. REPLACEMENTS SHALL BE MADE AS MANY TIMES AS NECESSARY TO ENSURE HEALTHY PLANTS AND THEY SHALL BE MAINTAINED AND GUARANTEED. REPLACEMENTS SHALL BE MADE AT THE CONTRACTOR'S EXPENSE AND SHALL BE GUARANTEED FOR TWO FULL YEARS FROM TIME OF REPLACEMENT. PLANTS SHALL BE OTHERWISE PROTECTED AND MAINTAINED, INCLUDING, BUT NOT LIMITED TO, WATER AND SHADE. ANY PLANTS DEEMED NOT IN SATISFACTORY HEALTH OF CONDITION AT THE TIME OF PLANTING SHALL BE REPLACED AT THE CONTRACTORS EXPENSE.
2. THE CONTRACTOR SHALL SUPPLY ALL LABOR AND MATERIALS IN QUANTITIES SUFFICIENT TO COMPLETE THE WORK SHOWN ON THE DRAWINGS AND LISTED IN THE PLANT SCHEDULE.
3. UTILITY LOCATIONS SHOWN IN THE DRAWINGS ARE APPROXIMATE. EXERCISE CARE WHEN DIGGING IN AREAS OF POTENTIAL CONFLICT WITH UNDERGROUND OR OVERHEAD UTILITIES. THE CONTRACTOR IS RESPONSIBLE FOR ANY DAMAGE DUE TO CONTRACTOR'S NEGLIGENCE AND SHALL REPLACE OR REPAIR ANY DAMAGE AT CONTRACTOR'S EXPENSE.
4. FOR ALL PLANTING AND LAWN AREAS, CONTRACTOR SHALL EXCAVATE EXISTING SOIL TO PROVIDE A MINIMUM OF 4" OF PLANTING TOPSOIL MIX FROM FINISHED PLANTING ELEVATION. CONTRACTOR SHALL SUBMIT TOPSOIL TO A CERTIFIED TESTING LABORATORY TO DETERMINE pH, FERTILITY, ORGANIC CONTENT AND MECHANICAL COMPOSITION. THE CONTRACTOR SHALL SUBMIT THE TEST RESULTS FROM REGIONAL EXTENSION OFFICE OF USDA TO THE OWNER OR LANDSCAPE ARCHITECT FOR REVIEW AND APPROVAL. CONTRACTOR SHALL INCORPORATE AMENDMENTS FOR GOOD PLANT GROWTH AND PROPER SOIL ACIDITY RECOMMENDED FROM THE TOPSOIL TEST AT NO INCREASE IN CONTRACT PRICE.
5. ALL LANDSCAPING SHALL BE PERPETUALLY MAINTAINED BY THE PROPERTY OWNER. ANY LANDSCAPING NEEDED TO MEET AN ORDINANCE REQUIREMENT THAT DIES, IS REMOVED, OR IS SEVERELY DAMAGED SHALL BE REPLACED BY THE CURRENT PROPERTY OWNER AS SOON AS IS PRACTICAL CONSIDERING GROWING SEASONS, WITHIN A MAXIMUM OF 150 DAYS.
6. AT ALL TIMES, THE SITE SHALL BE KEPT NEAT AND SHALL BE KEPT FREE OF DEBRIS LEFT FROM THE PLANTING OPERATION.
7. ALL DISTURBED LANDSCAPE AREAS ARE TO BE RESEEDED.
8. DURING THE CONSTRUCTION AND GURANTEE PERIOD, WATER LAWN AT THE MINIMUM RATE OF 1 INCH (25 MM) PER WEEK. MOW LAWNS AS SOON AS THERE IS ENOUGH TOP GROWTH TO CUT WITH MOWER SET AT SPECIFIED HEIGHT FOR PRINCIPAL SPECIES PLANTED. REPEAT MOWING AS REQUIRED TO MAINTAIN SPECIFIED HEIGHT WITHOUT CUTTING MORE THAN 40 PERCENT OF GRASS HEIGHT. REMOVE NO MORE THAN 40 PERCENT OF GRASS-LEAF GROWTH IN INITIAL OR SUBSEQUENT MOWINGS. DO NOT DELAY MOWING UNTIL GRASS BLADES BEND OVER AND BECOME MATTED. DO NOT MOW WHEN GRASS IS WET.
9. ALL DISTURBED AREAS WITHIN 50' OF A STREAM CROSSING (WHERE THE STREAM WIDTH IS LESS THAN OR EQUAL 10') SHALL BE STABILIZED WITHIN 24 HOURS OF COMPLETING CONSTRUCTION AT THE CROSSING.
10. ALL DISTURBED AREAS WITHIN 50' OF A STREAM CROSSING (WHERE THE STREAM WIDTH > 10') SHALL BE STABILIZED WITHIN 48 HOURS OF COMPLETING CONSTRUCTION AT THE CROSSING.

ACID-PRODUCING SOILS AND BEDROCK CONTROL PLAN

THE FOLLOWING ACID PRODUCING SOILS CONTROL PLAN WAS DEVELOPED TO IDENTIFY BMPS AND PROCEDURES FOR MINIMIZING THE POTENTIAL FOR POLLUTION ASSOCIATED WITH THE DISTURBANCE OF THE AREAS WITHIN THE PROPOSED RIGHT-OF-WAY THAT CONTAIN ACID-PRODUCING SOILS.

ACID-PRODUCING SOILS AND BEDROCK CONTROL PLAN:

1. CONTRACTOR SHALL LIMIT THE EXCAVATION AREA AND EXPOSURE TIME WHEN HIGH ACID-PRODUCING SOILS ARE ENCOUNTERED. LOCATIONS WHERE ACIDIC SOILS ARE ANTICIPATED TO BE PRESENT ON THE SITE.
2. CONTRACTOR SHALL SEPARATELY STORE TOPSOIL STRIPPED FROM THE SITE AWAY FROM TEMPORARILY STOCKPILED HIGH ACID-PRODUCING SOILS AND BEDROCK.
3. CONTRACTOR SHALL STOCKPILE HIGH ACID-PRODUCING SOILS AND BEDROCK MATERIAL ON LEVEL GROUND TO MINIMIZE ITS MOVEMENT, ESPECIALLY WHEN THESE MATERIALS HAVE A HIGH CLAY CONTENT.
4. CONTRACTOR SHALL COVER TEMPORARILY STOCKPILED HIGH ACID-PRODUCING SOIL AND BEDROCK MATERIAL TO BE EXPOSED MORE THAN 30 DAYS WITH PROPERLY ANCHORED, HEAVY-GRATE SHEETS OF POLYETHYLENE, WHERE POSSIBLE. IF NOT POSSIBLE, STOCKPILES SHALL BE COVERED WITH A MINIMUM OF THREE TO SIX INCHES OF WOOD CHIPS TO MINIMIZE EROSION OF THE STOCKPILE. IN ADDITION, THE CONTRACTOR SHALL INSTALL SILT FENCE AT THE TOE OF THE STOCKPILE SLOPE TO CONTAIN MOVEMENT OF MATERIAL

RIP RAP GRADATION, FILTER BLANKET, MAXIMUM VELOCITIES

Riprap Gradation, Filter Blanket Requirements, Maximum Velocities

Class, Size NO.	Percent Passing (Square Openings)					
Rock Size (Inches)	R-8	R-7	R-6	R-5	R-4	R-3
42	100					
30		100				
24	15-50		100			
18		15-50		100		
15	0-15					
12		0-15	15-50		100	
9				15-50		
6			0-15		15-50	100
4				0-15		
3					0-15	15-50
2						0-15
Nominal Placement Thickness (inches)	63	45	36	27	18	9
Filter Stone[1]	AASHTO #1	AASHTO #1	AASHTO #1	AASHTO #3	AASHTO #3	AASHTO #57
V_{max} (ft/sec)	17.0	14.5	13.0	11.5	9.0	6.5

Adapted from PennDOT Pub. 408, Section 703.2(c), Table C

ADAPTED FROM PENNDOT PUB. 408, SECTION 703.2 (c), TABLE C.

1. THIS IS A GENERAL STANDARD. SOIL CONDITIONS AT EACH SITE SHOULD BE ANALYZED TO DETERMINE ACTUAL FILTER SIZE. A SUITABLE WOVEN OR NON-WOVEN GEOTEXTILE UNDERLAYMENT, USED ACCORDING TO THE MANUFACTURER'S RECOMMENDATIONS, MAY BE SUBSTITUTED FOR THE FILTER STONE FOR GRADIENTS < 10%.

LIMING AND FERTILIZER RATES

Soil Amendment	Permanent Seeding Application Rate			Notes
	Per Acre	Per 1,000 sq. ft.	Per 1,000 sq. yd.	
Agricultural lime	6 tons	240 lb.	2,480 lb.	Or as per soil test; may not be required in agricultural fields
10-10-20 fertilizer	1,000 lb.	25 lb.	210 lb.	Or as per soil test; may not be required in agricultural fields
	Temporary Seeding Application Rate			
Agricultural lime	1 ton	40 lb.	410 lb.	Typically not required for topsoil stockpiles
10-10-10 fertilizer	500 lb.	12.5 lb.	100 lb.	Typically not required for topsoil stockpiles

PA DEP TABLE 11.2

1 NO LIME AND/OR FERTILIZER MAY BE APPLIED IN WETLANDS.

SLOPE SEED MIX

Common Name	Scientific Name	# PLS/ acre	PLS/sq ft	% of Mix
Big Bluestem	Andropogon gerardii	2.0	6.0	10
Little Bluestem	Schizachyrium scoparium	1.0	6.0	10
Switchgrass	Panicum virgatum	1.3	12.0	20
Timothy	Phleum prantense	0.4	12.0	20
Virginia Wildrye	Elymus virginicus	4.4	7.5	13
Deertongue	Dichanthelium clandestinum	0.7	6.0	10
Blackeyed Susan	Rudbeckia hirta	0.1	3.0	5
White Clover	Trifolium repens	0.2	3.0	5
Oxeye Sunflower	Heliopsis helianthoides	0.6	1.5	3
Partridge Pea	Chamaecrista fasciculata	1.1	1.5	3
Purple Coneflower	Echinacea purpurea	0.6	1.5	3
Total	--	12.3	60.0	100.00

NOTES:

1 PLS IS ROUNDED TO THE NEAREST TENTH OF A POUND.
PLS = PURE LIVE SEED

ROW SEED MIX

Common Name	Scientific Name	# PLS/ acre[1]	PLS/sq ft	% of Mix
Red Top	Agrostis gigantea	0.1	12.0	20
Timothy	Phleum prantense	0.4	12.0	20
Tall Fescue	Festuca arundinacea	1.7	9.0	15
Annual Rygrass	Lolium perenne multiflorum	1.7	9.0	15
Italian Ryegrass	Festulium	1.7	9.0	15
Alsike Clover	Trifolium hybridum	0.2	3.0	5
White Clover	Trifolium repens	0.2	3.0	5
Ladino White Clover	Trifolium repens latum	0.2	3.0	5
Total	--	6.2	60.0	100

NOTES:

1 PLS IS ROUNDED TO THE NEAREST TENTH OF A POUND.
PLS = PURE LIVE SEED

SPECIES TYPE AND SEASON OF PLANTING

Species Type and Season of Planting	
Cover Crops[1]	
Cool Season - Spring	March 1 to June 1
Warm Season	June 1 to August 15
Cool Season - Fall	August 15 - October 15
Permanent Crop[2]	
Spring	April 20 to June 15
Late Fall (dormant)	October 10 - March 1

NOTES:

1. SEEDING DATES FOR COVER CROPS ARE BASED ON DATES REFERENCED BY CLARK, ____.

2. SEEDING DATES FOR PERMANENT CROPS ARE BASED ON DATES REFERENCED BY LANDSHOOT, 1997 AND DELONG AND BRITTINGHAM, 2002.

SEED AFTER OCTOBER 10 WHEN GROUND TEMPERATURES AT A DEPTH OF 4 INCHES ARE 45 F OR LOWER AND COOLER AIR TEMPERATURES ARE FORECASTED.

DORMANT SEEDING CAN OCCUR UNTIL SOIL IS FROZEN AND ADEQUATE PENETRATION OF THE DRILL SEEDER DOES NOT OCCUR.

COVER CROP SEED MIXES

Cover Crop Seed Mixes				
Warm Season				
Common Name	Crop Type	# PLS/ acre	PLS/sq ft	% of Mix
Pearl Millett	Grass	6.9	12.6	70
Sunn Hemp	Legume	10.5	3.6	20
Nitro Radishes	Brassicas	3.1	1.8	10
Total	--	20.5	18.0	100
Cool Season				
Annual ryegrass	Grass	8.0	35.1	65
Red Clover	Legume	3.2	13.5	25
Nitro Radishes	Brassicas	9.4	5.4	10
Total	--	20.6	54.0	100

NOTES:

1 PLS IS ROUNDED TO THE NEAREST TENTH OF A POUND.
PLS = PURE LIVE SEED

TEMPORARY SEED MIX

TEMPORARY SEEDING SHALL CONSIST OF ANNUAL RYEGRASS (100 PERCENT BY WEIGHT), OR EQUIVALENT, AND SHALL BE PLACED AT THE RATE OF 5 POUNDS PER 1,000 SQUARE YARDS. TEMPORARY SEEDING SHALL BE APPLIED TO THOSE AREAS THAT ARE A POTENTIAL EROSION PROBLEM DURING CONSTRUCTION AND TO THOSE AREAS EXPOSED FOR LONGER THAN 20 CALENDAR DAYS. IF CONDITIONS DO NOT PERMIT TEMPORARY SEEDING, MULCHING SHALL BE EMPLOYED. ADDITIONALLY, NITROGEN FERTILIZER (50-50-50) @ ONE (1) TON PER ACRE, AGRICULTURAL LIME @ ONE (1) TON PER ACRE, AND STRAW MULCH @ THREE (3) TONS PER ACRE. STRAW MULCH SHALL BE APPLIED IN LONG STRANDS, NOT CHOPPED OR FINELY BROKEN.

PERMANENT SEED MIXTURES COOL & WARM SEASON GRASSES

HAYFIELDS

Common Name	Scientific Name	# PLS/acre	PLS/sq ft	% of Mix
Orchardgrass	Dactylis glomerata	4.0	60.0	40
Timothy	Phleum pratense	2.0	60.0	40
Ladino White Clover	Trifolium repens latum	0.8	15.0	10
Red Clover	Trifolium pratense	2.4	15.0	10
Total	--	9.2	150.0	100

PASTURES

Common Name	Scientific Name	# PLS/acre	PLS/sq ft	% of Mix
Timothy	*Phleum pratense*	0.5	15.0	25%
Perennial Ryegrass	*Lolium perenne*	2.3	12.0	20%
Red Top	*Agrostis gigantea*	0.1	9.0	15%
Italian Ryegrass	*Festulolium*	1.7	9.0	15%
Alsike Clover	*Trifolium hybridum*	0.6	9.0	15%
Ladino White Clover	*Trifolium repens latum*	0.3	6.0	10%
Total	--	5.5	60.0	100%

SLOPING/FORESTED LAND

Common Name	Scientific Name	# PLS/acre	PLS/sq ft	% of Mix
Sideoats Grama	*Bouteloua curtipendula*	1.4	6.0	10%
Little Bluestem	*Schizachyrium scoparium*	1.0	6.0	10%
Switchgrass	*Panicum virgatum*	1.3	12.0	20%
Timothy	*Phleum pratense*	0.4	12.0	20%
Virginia Wildrye	*Elymus virginicus*	4.24	7.2	12%
Deertongue	*Dichanthelium clandestinum*	0.7	6.0	10%
Blackeyed Susan	*Rudbeckia hirta*	0.1	2.4	4%
White Clover	*Trifolium repens*	0.1	2.4	4%
Oxeye Sunflower	*Heliopsis helianthoides*	0.8	1.8	3%
Partridge Pea	*Chamaecrista fasciculata*	1.7	2.4	4%
Purple Coneflower	*Echinacea purpurea*	0.7	1.8	3%
Total	--	12.3	60.0	100%

DROUGHT/ROCKY SITES

Common Name	Scientific Name	# PLS/acre	PLS/sq ft	% of Mix
Little Bluestem	*Schizachyrium scoparium*	1.5	9.0	15%
Timothy	*Phleum pratense*	0.3	9.0	15%
Prairie Junegrass	*Koeleria macrantha*	0.1	6.0	10%
Deertongue	*Dichanthelium clandestinum*	1.0	9.0	15%
Sideoats Grama	*Bouteloua curtipendula*	2.7	12.0	20%
Virginia Wildrye	*Elymus virginicus*	3.5	6.0	10%
Partridge Pea	*Chamaecrista fasciculata*	2.1	3.0	5%
Ladino White Clover	*Trifolium repens latum*	0.2	3.0	5%
Lanceleaf Coreopsis	*Coreopsis lanceolata*	0.6	3.0	5%
Total	--	12.0	60.0	100%

NON-AGRICULTURAL MEADOWS

Common Name	Scientific Name	# PLS/acre	PLS/sq ft	% of Mix
Virginia Wildrye	*Elymus virginicus*	5.3	9.0	15%
Little Bluestem	*Schizachyrium scoparium*	1.5	9.0	15%
Sideoats Grama	*Bouteloua curtipendula*	2.1	9.0	15%
Deertongue	*Dichanthelium clandestinum*	1.0	9.0	15%
Partridge Pea	*Chamaecrista fasciculata*	4.2	6.0	10%
Oxeye Sunflower	*Heliopsis helianthoides*	1.3	3.0	5%
Lanceleaf Coreopsis	*Coreopsis lanceolata*	1.2	6.0	10%
Blackeyed Susan	*Rudbeckia hirta*	0.1	3.0	5%
Butterfly Milkweed	*Asclepias tuberosa*	5.2	6.0	10%
Total	--	21.8	60.0	100%

NATIVE NON-NATIVE FOOD PLOT MIX

Common Name	Scientific Name	# PLS/acre	PLS/sq ft	% of Mix
Timothy	*Phleum pratense*	0.4	12.0	20%
Upland Bent Grass	*Agrostis perennans*	0.1	9.0	15%
Virginia Wildrye	*Elymus virginicus*	5.3	9.0	15%
White Clover	*Trifolium repens*	0.5	9.0	15%
Ladino White Clover	*Trifolium repens latum*	0.7	12.0	20%
Crimson Clover	*Trifolium incarnatum*	3.5	9.0	15%
Total	--	10.4	60.0	100%

STORM BASIN MIX

Common Name	Scientific Name	# PLS/acre	12.0	20%
Orchardgrass	*Dactylis glomerata*	0.8	12.0	20%
Timothy	*Phleum pratense*	0.4	9.0	15%
Switchgrass	*Panicum virgatum*	1.0	12.0	20%
Virginia Wildrye	*Elymus virginicus*	7.1	9.0	15%
Fox Sedge	*Carex vulpinoidea*	0.3	3.0	5%
Oxeye Sunflower	*Heliopsis helianthoides*	1.3	3.0	5%
Swamp Milkweed	*Asclepias incarnata*	1.7	60.0	100%
Total	--	12.6	12.0	20%

POLLINATOR MIX (TO BE ADDED TO ANY MIX UPON LANDOWNER REQUEST)

Common Name	Scientific Name	# PLS/acre	PLS/sq ft	% of Mix
Butterfly Milkweed	*Asclepias tuberosa*	2.6	3.0	15%
Purple Coneflower	*Echinacea purpurea*	1.1	3.0	15%
Dense Blazing Star	*Liatris spicata*	0.7	2.0	10%
Lanceleaf Coreopsis	*Coreopsis lanceolata*	0.4	2.0	10%
Blackeyed Susan	*Rudbeckia hirta*	0.1	3.0	15%
Oxeye Sunflower	*Heliopsis*	1.3	3.0	15%
Wild Bergamot	*Monarda fistulosa*	0.1	2.0	10%
Hoary Mountainmint	*Pycnanthemum*	0.0	2.0	10%
Total	--	6.3	20.0	100%

BRASSICA MIX

Common Name	Scientific Name	# PLS/acre	PLS/sq ft	% of Mix
Bonar (Rape)	*Brassica napus*	2.7	6.6	33%
Turnip	*Brassica rapa*	12.9	6.6	33%
Nitro Radish	*Raphanus*	11.8	6.8	34%
Total	--	27.4	20.0	100%

SITE SOIL TYPES AND LIMITATIONS

MAP UNIT NAME	MAP UNIT DESIGNATION	SLOPES	SOIL NAME	CUTBANKS CAVE	CORROSIVE TO CONCRETE/STEEL	DROUGHTY	EASILY ERODIBLE	FLOODING	HIGH WATER TABLE	HYDRIC/HYDRIC INCLUSIONS	LOW STRENGTH	SLOW PERCOLATION	PIPING	POOR SOURCE OF TOPSOIL	FROST ACTION	SHRINK-SWELL	POTENTIAL SINKHOLE	PONDING	WETNESS
BRACEVILLE GRAVELLY LOAM	BrB	3-8%	BRACEVILLE	X	C/S	X	X		X	X	X	X	X	X	X				X
CHIPPEWA SILT LOAM	CIB	3-8%	CHIPPEWA	X	C/S	X	X		X	X	X	X	X		X	X		X	
	CnB	0-8%		X	C/S	X	X		X	X	X	X	X		X	X		X	
LACKAWANNA CHANNERY SILT LOAM	LaB	3-8%	LACKAWANNA	X	C	X			X	X	X			X	X				X
WELLSBORO CHANNERY SILT LOAM	WIB	3-8%	WELLSBORO	X	C/S	X	X		X	X	X	X	X		X				X
	WIC	8-15%		X	C/S	X	X		X	X	X	X	X		X				X

SOILS LIMITATIONS AND RESOLUTIONS

LIMITATION	RESOLUTION
CUTBANKS CAVE	EXCAVATIONS WILL BE PROPERLY SUPPORTED BY SHEETING AND SHORING TO PREVENT CAVES.
CORROSIVE TO CONCRETE/STEEL	NO CONCRETE OR STEEL PIPING IS PROPOSED WITHOUT APPROPRIATE PROTECTIVE COATINGS.
DROUGHTY	EXISTING SUITABLE TOPSOIL AND SOIL AMENDMENTS WILL BE USED DURING CONSTRUCTION.
EASILY ERODIBLE	TEMPORARY AND PERMANENT EROSION CONTROL BMPS WILL BE EMPLOYED THROUGHOUT THE SITE.
FLOODING	ENSURE THAT THE SITE HAS PROPER DRAINAGE.
HIGH WATER TABLE	A GEOTECHNICAL INVESTIGATION WAS CONDUCTED TO MINIMIZE CONFLICTS WITH SATURATED ZONES.
HYDRIC/HYDRIC INCLUSIONS	A WETLAND INVESTIGATION WAS COMPLETED TO DETERMINE IF WETLANDS ARE PRESENT IN THE DEVELOPMENT AREA.
LOW STRENGTH	A MAXIMUM OF 3:1 SLOPES ARE PROPOSED.
SLOW PERCOLATION	FIELD INVESTIGATIONS OF PERCOLATION RATES AT THE INFILTRATION AREAS WERE PERFORMED TO VERIFY THE SOILS PERCOLATION CAPACITY.
PIPING	WATERTIGHT PIPE, ANTISEEP COLLARS, CLAY CORES THROUGH BASIN BERMS, AND CONCRETE ENDWALLS WILL BE USED TO MINIMIZE THE DANGER OF PIPING.
POOR SOURCE OF TOPSOIL	EXISTING TOPSOIL, WHICH HAS PROVEN TO BE SUITABLE, WILL BE REUSED ON THE SITE.
FROST ACTION	PAVEMENT SUBBASE WILL BE PROVED TO MINIMIZE FROST AFFECTS.
SHRINK-SWELL	STONE BASE WILL BE PROVED TO PREVENT SHRINK-SWELL FROM EFFECTING PAVEMENT.
POTENTIAL SINKHOLE	GEOTECHNICAL ENGINEER OF RECORD RECOMMENDATIONS WILL BE FOLLOWED FOR ANY POTENTIAL OCCURRENCES.
PONDING	SURFACE GRADING AND DRAINAGE FACILITIES WILL BE PROVIDED TO MINIMIZE PONDING AFFECTS.
WETNESS	WET WEATHER CONSTRUCTION RECOMMENDATIONS, PER THE GEOTECHNICAL ENGINEER'S RECOMMENDATIONS, WILL BE EMPLOYED TO MINIMIZE THE AFFECTS OF WETNESS DURING CONSTRUCTION, SURFACE GRADING. SURFACE GRADING AND DRAINAGE WILL BE PROVIDED TO MINIMIZE WETNESS AFFECTS AFTER CONSTRUCTION.

MULCH

1. MULCHES SHOULD BE APPLIED AT THE RATES SHOWN IN TABLE 11.6
2. STRAW AND HAY MULCH SHOULD BE ANCHORED OR TACKIFIED IMMEDIATELY AFTER APPLICATION TO PREVENT BEING WINDBLOWN. A TRACTOR-DRAWN IMPLEMENT MAY BE USED TO "CRIMP" THE STRAW OR HAY INTO THE SOIL – ABOUT 3 INCHES. THIS METHOD SHOULD BE LIMITED TO SLOPES NO STEEPER THAN 3H:1V. THE MACHINERY SHOULD BE OPERATED ON THE CONTOUR. CRIMPING OF HAY OR STRAW BY RUNNING OVER IT WITH TRACKED MACHINERY IS NOT RECOMMENDED.
3. POLYMERIC AND GUM TACKIFIERS MIXED AND APPLIED ACCORDING TO MANUFACTURER'S RECOMMENDATIONS MAY BE USED TO TACK MULCH. AVOID APPLICATION DURING RAIN AND ON WINDY DAYS. A 24-HOUR CURING PERIOD AND A SOIL TEMPERATURE HIGHER THAN 45°F ARE TYPICALLY REQUIRED. APPLICATION SHOULD GENERALLY BE HEAVIEST AT EDGES OF SEEDED AREAS AND AT CRESTS OF RIDGES AND BANKS TO PREVENT LOSS BY WIND. THE REMAINDER OF THE AREA SHOULD HAVE BINDER APPLIED UNIFORMLY. BINDERS MAY BE APPLIED AFTER MULCH IS SPREAD OR SPRAYED INTO THE MULCH AS IT IS BEING BLOWN ONTO THE SOIL. APPLYING STRAW AND BINDER TOGETHER IS GENERALLY MORE EFFECTIVE.
4. SYNTHETIC BINDERS, OR CHEMICAL BINDERS, MAY BE USED AS RECOMMENDED BY THE MANUFACTURER TO ANCHOR MULCH PROVIDED SUFFICIENT DOCUMENTATION IS PROVIDED TO SHOW THEY ARE NON-TOXIC TO NATIVE PLANT AND ANIMAL SPECIES.
5. MULCH ON SLOPES 8% OR STEEPER SHOULD BE HELD IN PLACE WITH NETTING. LIGHTWEIGHT PLASTIC, FIBER, OR PAPER NETS MAY BE STAPLED OVER THE MULCH ACCORDING TO MANUFACTURER'S RECOMMENDATIONS.
6. SHREDDED PAPER HYDROMULCH SHOULD NOT BE USED ON SLOPES STEEPER THAN 5%. WOOD FIBER HYDROMULCH MAY BE APPLIED ON STEEPER SLOPES PROVIDED A TACKIFIER IS USED. THE APPLICATION RATE FOR ANY HYDROMULCH SHOULD BE 2,000 LB/ACRE AT A MINIMUM.
7. HYDRAULICALLY APPLIED BLANKETS CAN BE AN EFFECTIVE METHOD OF STABILIZING STEEP SLOPES WHEN USED PROPERLY. THEY MAKE USE OF A CROSS-LINKED HYDROCOLLOID TACKIFIER TO BOND THERMALLY PROCESSED WOOD FIVERS. APPLICATION RATES VARY ACCORDING TO SITE CONDITIONS. IN ANY CASE, MANUFACTURER'S RECOMMENDATIONS SHOULD BE FOLLOWED. SHOULD NOT BE USED IN AREAS OF CONCENTRATED FLOW (E.G. SWALES).
8. NO MULCH MAY BE APPLIED IN WETLANDS.

TABLE 11.6

MULCH APPLICATION RATES

MULCH TYPE	APPLICATION RATE (MIN.)			NOTES
	PER ACRE	PER 1,000 SQ. FT.	PER 1,000 SQ. YD.	
STRAW	3 TONS	140 LB.	1,240 LB.	EITHER WHEAT OR OAT STRAW, FREE OF WEEDS, NOT CHOPPED OR FINELY BROKEN
WOOD CHIPS	4-6 TONS	185-275 LB.	1,650-2,500 LB.	MAY PRVENT GERMINATION OF GRASSES AND LEGUMES
HYDRO- MULCH	1 TON	47 LB.	415 LB.	SEE LIMITATIONS ABOVE
HYDRAULICALLY APPLIED BLANKETS	3,000 LB.	N/A	N/A	SLOPES UP TO 3H:1V
	4,000 LB.	N/A	N/A	SLOPES STEEPER THAN 3H:1V

ALARIC J. BUSHER REG NO. PE 60320

BL Companies — ARCHITECTURE ENGINEERING ENVIRONMENTAL LAND SURVEYING

REVISIONS

NO.	DATE	BY	DESCRIPTION	W.O. NO.	CHK.	APP.
0	06/28/2015	BL	ISSUED FOR PADEP PERMIT SUBMITTAL	W01161499	DAK	AJB
1	12/02/2015	BL	ISSUED FOR PADEP RESUBMITTAL	W01161499	DAK	AJB
3	03/28/2016	BL	ISSUED FOR PADEP RESUBMITTAL	W01161499	AJB	AJB
4	*Oct. 2016*	*BL*	*PADEP TECHNICAL DEFICIENCY RESPONSE #1*	*W01161499*	*AJB*	*AJB*

TRANSCONTINENTAL GAS PIPE LINE COMPANY, LLC
ATLANTIC SUNRISE PROJECT– PROPOSED 30" NATURAL GAS PIPELINE
POST CONSTRUCTION STORMWATER MANAGEMENT PLANS FOR NORTH DIAMOND REGULATOR STATION & ASSOCIATED PERMANENT ACCESS ROADS
LEHMAN TOWNSHIP, LUZERNE COUNTY, PENNSYLVANIA
PCSM NOTES AND DETAILS

Williams

DRAWN BY: JEC	DATE: 04/03/15	ISSUED FOR BID:		SCALE: AS NOTED	
CHECKED BY: AJB	DATE: 04/03/15	ISSUED FOR CONSTRUCTION:		REVISION: 4	
APPROVED BY: AJB	DATE: 07/17/15	DRAWING NUMBER: (36-7935)MF-1A-9		SHEET 6 OF 8	
WO: 1161499					

Drawn By & Date/Time: hthomas Nov 11, 2016 – 12:01pm
Drawing Location & Name: G:\JOBS\14\14C\14C4909\DWG\010-CPLN\FRS_PCSM14C4909(10)_NDIAMOND.dwg

EARTH DISTURBANCE ACTIVITY - PAST, PRESENT, AND FUTURE LAND USES

THE LAND USES AND AQUATIC FEATURES FOUND WITHIN THE PROJECT AREA OCCUR ON MIXED HARDWOOD UPLAND FOREST, AND SHALLOW FORESTED WETLANDS. ACCORDING TO THE IMAGERY PROVIDED BY THE PENNSYLVANIA GEOLOGICAL SURVEY, THE LAND USES WITHIN THE PROJECT AREA REMAINED SIMILAR BETWEEN 1939 AND 1967. THE LAND USES ON THE 1939 AERIALS WERE PRIMARILY COMPOSED OF MIXED HARDWOOD UPLAND FOREST. FUTURE LAND USE WOULD INVOLVE THE INSTALLATION OF THE REGULATOR STATION PAD AND ACCESS ROAD.

THERMAL IMPACT ANALYSIS

THERMAL IMPACTS ASSOCIATED WITH CPL NORTH, CPL SOUTH, AND ASSOCIATED FACILITIES WILL BE AVOIDED TO THE MAXIMUM EXTENT PRACTICABLE. THE FOLLOWING PROVISIONS RELATED TO THERMAL IMPACTS ARE INCLUDED IN THE E&SC PLAN WITHIN SECTION 2 OF THE ESCGP-2 NOI:

- THE MINIMUM PERMANENT CHANGES IN LAND COVER, NECESSARY TO CONSTRUCT THE REQUIRED FACILITIES ARE BEING PROPOSED.
- RUNOFF FROM THE PERMANENT IMPERVIOUS AREAS WILL BE COLLECTED AS PART OF THE POST CONSTRUCTION STORMWATER MANAGEMENT/SITE RESTORATION (PCSM/SR) PLAN AND ROUTED TO PCSM/SR BMPS. IN ADDITION, IMPERVIOUS AREAS WILL BE GRAVEL INSTEAD OF ASPHALT WHEREVER PRACTICAL.
- PCSM/SR BMPS INCORPORATE THE USE OF WATER QUALITY AND RATE MANAGMENT FACILITIES SUCH AS A RAIN GARDEN AND VEGETATED SWALES WITH EARTHEN CHECK DAMS.
- THE REMOVAL OF VEGETATION, ESPECIALLY TREE COVER, WILL BE LIMITED TO ONLY THAT NECESSARY FOR CONSTRUCTION.
- THE AMOUNT OF IMPERVIOUS SURFACES WILL BE LIMITED TO ONLY THAT NECESSARY TO SUPPORT THE CONSTRUCTION OF THE FACILITY.
- THE IMPACTS TO EXISTING RIPARIAN CORRIDORS WILL BE LIMITED TO ONLY THAT NECESSARY FOR CONSTRUCTION.

CRITICAL STAGES OF CONSTRUCTION

THE FOLLOWING ARE CRITICAL STAGES OF CONSTRUCTION:

1. INSTALLATION OF VEGETATED SWALES AND ***CHECK DAMS***.
2. INSTALLATION OF STORMWATER BASINS.
3. SOIL AMENDMENT.

REGULATOR STATION SEQUENCE OF CONSTRUCTION

1. AT LEAST 7 DAYS PRIOR TO STARTING ANY EARTH DISTURBANCE ACTIVITIES, INCLUDING CLEARING AND GRUBBING, THE OWNER AND/OR OPERATOR SHALL INVITE ALL CONTRACTORS, ENVIRONMENTAL INSPECTORS, THE LANDOWNER, APPROPRIATE MUNICIPAL OFFICIALS, THE E&S PLAN PREPARER, THE PCSM PLAN PREPARER, THE LICENSED PROFESSIONAL RESPONSIBLE FOR OVERSIGHT OF CRITICAL STAGES OF IMPLEMENTATION OF THE PCSM PLAN, AND A REPRESENTATIVE FROM THE LOCAL CONSERVATION DISTRICT TO AN ON-SITE PRECONSTRUCTION MEETING.
2. AT LEAST 3 DAYS PRIOR TO STARTING ANY EARTH DISTURBANCE ACTIVITIES, OR EXPANDING INTO AN AREA PREVIOUSLY UNMARKED, THE PENNSYLVANIA ONE CALL SYSTEM INC. SHALL BE NOTIFIED AT 1-800-242-1776 FOR THE LOCATION OF EXISTING UNDERGROUND UTILITIES.
3. INSTALL ORANGE CONSTRUCTION FENCE AROUND AREAS TO BE PROTECTED.
4. LOCATE STAGING AREAS AND ACCESS POINTS INCLUDING CONSTRUCTION ENTRANCES. FIELD LOCATE LIMITS OF DISTURBANCE.
5. INSTALL ROCK CONSTRUCTION ENTRANCES (RCES).
6. REMOVE BRUSH TO EFFECTIVELY INSTALL PERIMETER CONTROLS, LEVEL SIDE CUTS TO GRANT ACCESS FOR VEHICLES AND WORKERS TO SAFELY PERFORM THE INSTALLATION OF SEDIMENT BARRIERS ON THE SITE AS SHOWN ON THE CONSTRUCTION DRAWINGS.
7. THE COMPLIANCE MANAGER SHALL PROVIDE PADEP AND CCD AT LEAST THREE DAYS' NOTICE PRIOR TO BULK EARTH DISTURBANCE AND UPON COMPLETED INSTALLATION OF PERIMETER EROSION CONTROLS.
8. * INSTALL PERMANENT ACCESS ROADS AND ASSOCIATED BMPS (VEGETATED ROADSIDE SWALES 1A AND 1B AND RIPRAP OUTLET PROTECTION). DO NOT INSTALL EARTHEN CHECK DAMS AT THIS TIME. IMMEDIATELY INSTALL CHANNEL LINING, SEED AND ADD MULCH IN SWALES.
9. * INSTALL VEGETATED SWALE 2. INSTALL DRAINAGE CHANNEL APRONS AS SOON AS SWALE GRADING IS COMPLETE. DO NOT INSTALL EARTHEN CHECK DAMS AT THIS TIME. IMMEDIATELY INSTALL CHANNEL LINING, SEED AND MULCH IN CHANNEL.
10. * BEGIN INSTALLING RAIN GARDEN WITH DISCHARGE CULVERT AND ASSOCIATED HEADWALL, OUTLET PROTECTION. INSTALL ORANGE CONSTRUCTION FENCE AT PERIMETER TO PREVENT COMPACTION OF SOILS. INSTALL FILTER SOCK AT BASE OF RAIN GARDEN TO PREVENT THE MIGRATION OF SEDIMENTS DURING CONSTRUCTION. IMMEDIATELY STABILIZE DISTURBED AREAS AS SITE REACHES FINISHED GRADES.
11. PROCEED WITH MAJOR CLEARING AND GRUBBING.
12. BEGIN CONSTRUCTION STAKING FOR GRADING.
13. BEGIN GRADING AND STRIP AND STOCKPILE TOPSOIL WITHIN THE REGULATOR STATION AREA AND INSTALL SEDIMENT BARRIERS AROUND STOCKPILES.
14. UPON TEMPORARY CESSATION OF AN EARTH DISTURBANCE ACTIVITY OR ANY STAGE OF AN ACTIVITY WHERE THE CESSATION OF EARTH DISTURBANCE ACTIVITIES WILL EXCEED FOUR DAYS, THE SITE SHALL BE IMMEDIATELY SEEDED, MULCHED, OR OTHERWISE PROTECTED FROM ACCELERATED EROSION AND SEDIMENTATION PENDING FUTURE EARTH DISTURBANCE ACTIVITIES. FOR AN EARTH DISTURBANCE ACTIVITY OR ANY STAGE OF AN ACTIVITY TO BE CONSIDERED TEMPORARILY STABILIZED, THE DISTURBED AREAS SHALL BE COVERED WITH ONE OF THE FOLLOWING: A MINIMUM UNIFORM COVERAGE OF MULCH AND SEED, WITH A DENSITY CAPABLE OF RESISTING ACCELERATED EROSION AND SEDIMENTATION, OR AN ACCEPTABLE BMP WHICH TEMPORARILY MINIMIZES ACCELERATED EROSION AND SEDIMENTATION. TEMPORARY STABILIZATION WILL NOT OCCUR ON ACTIVE VEHICULAR TRAVEL WAYS WITHIN THE ROW. THE ON-SITE ENVIRONMENTAL INSPECTOR WILL LOG DAILY ACTIVITY WITHIN THE LOD AND NOTIFY THE CONTRACTOR OF AREAS REQUIRING TEMPORARY STABILIZATION (I.E., AREAS WHERE WORK HAS CEASED FOR AT LEAST FOUR DAYS).
15. ROUGH GRADE SITE.
16. GRADE THE REGULATOR STATION PAD AS SHOWN ON THE E&SC AND PCSM/SR PLANS (SECTIONS 2 AND 3 OF THE ESCGP-2 NOI).
17. IMMEDIATELY STABILIZE SIDE SLOPES WITH EROSION CONTROL MATTING WHEN SLOPES ARE 3:1 OR GREATER. SEE PCSM/SR PLANS AND DETAIL SHEETS, AS PROVIDED IN SECTION 3 OF THE ESCGP-2 NOI, (PATTERNS DIFFER BY SLOPE CATEGORY). INSTALL RIP RAP SLOPE STABILIZATION WHERE SHOWN ON THE PCSM/SR PLANS.
18. INSTALL DITCH RELIEF CULVERTS WITH ASSOCIATED OUTLET PROTECTION. IMMEDIATELY SEED, STABILIZE, AND INSTALL EROSION CONTROL BLANKET WHEN CHANNEL REACHES FINISHED GRADE.
19. RESURFACE ACCESS ROAD.
20. ESTABLISH FINAL GRADE.
21. SURFACE STABILIZATION, APPLY PERMANENT STABILIZATION MEASURES IMMEDIATELY TO ANY DISTURBED AREAS WHERE WORK HAS REACHED FINAL GRADE.
22. * COMPLETE SOIL AMENDMENT IN AREAS DESIGNATED ON THE PCSM/SR PLANS (SECTION 3 OF THE ESCGP-2 NOI).
23. UPON COMPLETION OF ALL EARTHWORK ACTIVITIES AND PERMANENT STABILIZATION OF ALL DISTURBED AREAS, THE OWNER AND/OR OPERATORS SHALL CONTACT THE LOCAL CCD FOR AN INSPECTION PRIOR TO THE REMOVAL/CONVERSION OF THE E&SC BMPS.
24. * INSTALL EMERGENCY SPILLWAY AND ESTABLISH FINAL GRADING FOR RAIN GARDEN CONFIGURATION. AMEND SOIL, SEED, AND STABILIZE BASIN.
25. * REMOVE ACCUMULATED SEDIMENTS IN VEGETATIVE SWALES. INSTALL EARTHEN CHECK DAMS IN SWALES 1A, 1B AND 2.
26. AFTER FINISH GRADING AND TOPSOIL PLACEMENT IS COMPLETED, DISTURBED AREAS SHALL BE FERTILIZED, SEEDED, AND MULCHED. SEED MIXTURES, FERTILIZER AND MULCH APPLICATIONS RATES AND DATES SHALL CONFORM TO THE TABLES PROVIDED ON THE PCSM/SR PLANS AND DETAIL SHEETS (SECTION 3 OF THE ESCGP-2 NOI), LAND OWNER AGREEMENTS AND/OR THE ECP (SECTION 4 OF THE ESCGP-2 NOI).
27. AFTER SEEDING, FERTILIZING AND MULCHING IS COMPLETE, INSTALL EROSION CONTROL BLANKETS AS REQUIRED OR ORDERED OR ON SLOPES OF THAN 3:1 OR GREATER.
28. AFTER THE SITE IS PERMANENTLY STABILIZED AND UPON PADEP OR LOCAL CCD AND OWNER APPROVAL OF STABILIZATION AND RE-VEGETATION, REMOVE TEMPORARY EROSION AND SEDIMENT CONTROL MEASURES AND STABILIZE AREAS DISTURBED BY REMOVAL.
29. COMPLETE SITE STABILIZATION, INCLUDING SEED APPLICATION, SLOPE BLANKET INSTALLATION IN RAIN GARDEN, AND MULCHING.
30. UPON COMPLETION OF ALL EARTH DISTURBANCE ACTIVITIES AND PERMANENT STABILIZATION OF ALL DISTURBED AREAS, THE OWNER AND/OR OPERATORS SHALL CONTACT THE LOCAL CCD FOR A FINAL INSPECTION.
31. MAINTAIN E&SC BMPS UNTIL SITE WORK IS COMPLETE AND UNIFORM 70% PERENNIAL VEGETATIVE COVER IS ESTABLISHED.
32. REMOVE AND PROPERLY DISPOSE/RECYCLE REMAINING COMPOST FILTER SOCK. REMOVE ORANGE CONSTRUCTION FENCE. REPAIR AND PERMANENTLY STABILIZE AREAS DISTURBED DURING E&SC BMP REMOVAL UPON ESTABLISHMENT OF UNIFORM 70% VEGETATIVE COVER.

* INDICATES A CRITICAL STAGE OF PCSM INSTALLATION TO BE OBSERVED BY A LICENSED PROFESSIONAL OR DESIGNEE. CONTRACTOR TO PROVIDE 3 WORKING DAYS NOTICE TO ENGINEER AND WILLIAMS.

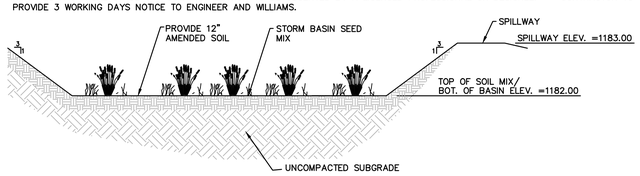

BIORETENTION/RAIN GARDEN CROSS-SECTION DETAIL

N.T.S

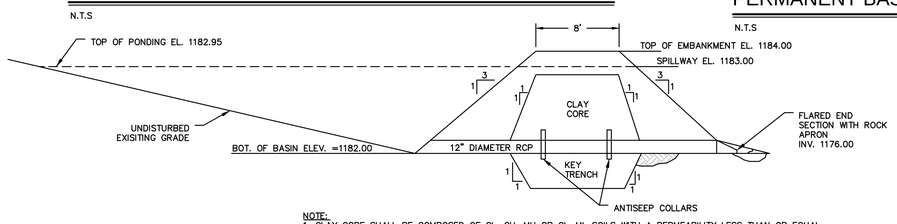

NOTE:
1. CLAY CORE SHALL BE COMPOSED OF CL, CH, MH OR CL-ML SOILS WITH A PERMEABILITY LESS THAN OR EQUAL TO 1.0×10^{-6} CM/S. MATERIAL SHALL BE COMPACTED TO A MINIMUM OF 95% MAXIMUM DENSITY PER ASTM-D 1557; WITHIN ± 3% OPTIMUM MOISTURE CONTENT.

BIORETENTION/RAIN GARDEN CROSS SECTION

N.T.S

NOTE: THIS WILLIAMS STANDARD DETAIL IS BASED ON PADEP STANDARD CONSTRUCTION DETAIL #9-2.

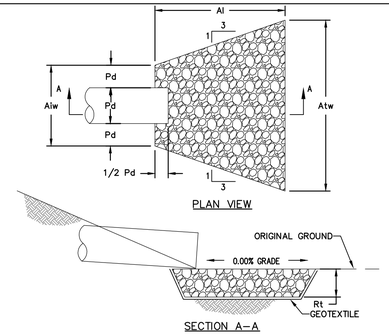

OUTLET NO.	PIPE DIA PD (IN)	RIPRAP		APRON		
		SIZE (R-_)	THICK. Rt (IN)	LENGTH Al (FT)	INITIAL WIDTH Aiw (FT)	TERMINAL WIDTH Atw (FT)
* ALL INFORMATION CAN BE FOUND ON ACCESS ROAD AND EROSION AND SEDIMENT CONTROL PLANS. REFER TO NOTES 4 AND 5 FOR DIMENSION LOCATIONS.						

NOTES:

1. ALL APRONS SHALL BE CONSTRUCTED TO THE DIMENSIONS SHOWN ON THE PLANS. TERMINAL WIDTHS SHALL BE ADJUSTED AS NECESSARY TO MATCH RECEIVING CHANNELS.
2. ALL APRONS SHALL BE INSPECTED AT LEAST WEEKLY AND AFTER EACH RUNOFF EVENT. DISPLACED RIPRAP WITHIN THE APRON SHALL BE REPLACED IMMEDIATELY.
3. EXTEND RIPRAP ON BACK SIDE OF APRON TO AT LEAST 1/2 DEPTH OF PIPE ON BOTH SIDES TO PREVENT SCOUR AROUND THE PIPE.
4. FOR APRONS ON ACCESS ROADS, THE DIMENSIONS FOR THE APRONS ARE GIVEN AS FOLLOWS: L x D x W/W
   WHERE: L = LENGTH OF APRON OR "Al" AS SHOWN IN THE PLAN VIEW ABOVE
   D = DEPTH OF RIP RAP OR "Rt" AS SHOWN IN THE SECTION ABOVE
   W/W = WIDTH OF SHORT END OF APRON/WIDTH OF LONG END OF APRON OR "Aiw"/"Atw" AS SHOWN IN THE PLAN VIEW ABOVE
5. FOR APRON ON SWALES AND FLUME CROSSINGS, THE DIMENSIONS FOR THE APRONS ARE AS FOLLOWS:
   DIMENSIONS LOCATED ON TABLE 2: TEMPORARY CLEAN WATER DIVERSION SUMMARY:
   a. RIP RAP SIZE (R-_) UNDER WATERBODY AND FLUME (CLEAN WATER CROSSING)
   b. APRON INITIAL WIDTH (Aiw) IS EQUAL TO BOTTOM WIDTH OF DIVERSION SWALES AND IS TWO FEET FOR FILTER SOCK DIVERSIONS.
   c. APRON TERMINAL WIDTH (Atw) IS EQUAL TO LEVEL SPREADER LENGTH
   DIMENSIONS LOCATED ON CLEAN WATER CROSSING DETAIL
   a. RIP RAP THICKNESS (Rt)
   b. APRON LENGTH (Al)

OUTLET NO.	PIPE DIA Pd (IN)	RIPRAP		APRON		
		SIZE (R-_)	THICK. Rt (IN)	LENGTH Al (FT)	INITIAL WIDTH Aiw (FT)	TERMINAL WIDTH (Atw) (FT)
VEGETATED SWALE 2	N/A	3	9	6	3	9
DITCH RELIEF CULVERT 1	18	4	18	10	4.5	14.5
DITCH RELIEF CULVERT 2	15	4	18	8	3.75	11.75
DITCH RELIEF CULVERT 3	15	4	18	8	3.75	11.75

RIP-RAP APRON AT PIPE OUTLET WITHOUT FLARED END SECTION

N.T.S

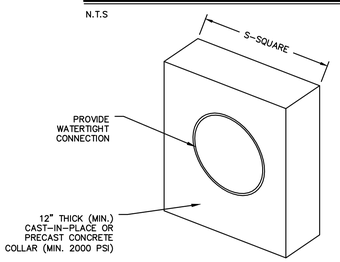

ALL COLLARS SHALL BE INSTALLED SO AS TO BE WATERTIGHT.

COLLAR SIZE AND SPACING SHALL BE AS INDICATED BELOW.

BASIN OR TRAP NO.	PIPE SIZE (IN)	S (IN)	NO. OF COLLARS	DISTANCE RISER TO 1ST COLLAR (FT)	COLLAR SPACING (FT)
RAIN GARDEN	12 (16"OD)	54	2	21	5

CONCRETE ANTI-SEEP COLLAR FOR PERMANENT BASINS OR TRAPS DETAIL

N.T.S PADEP-7-16

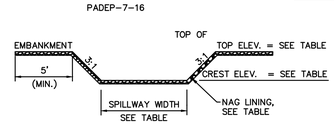

BASIN NO.	WEIR					LINING	
	Z3 (FT)	Z4 (FT)	TOP ELEV WTE (FT)	CREST ELEV WCE (FT)	WIDTH Ww (FT)	PERM. TYPE	THICKNESS
1	3	3	1184.00	1183.00	30	P550	N/A

RAIN GARDEN SPILLWAY

N.T.S

NOTE: THIS WILLIAMS STANDARD DETAIL IS BASED ON PADEP STANDARD CONSTRUCTION DETAIL #9-1.

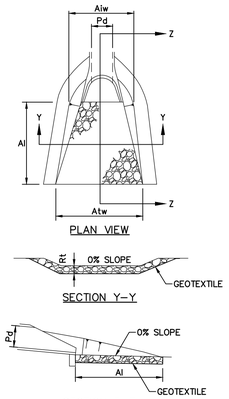

OUTLET NO.	PIPE DIA Pd (IN)	RIPRAP			APRON			
		SIZE (R-_)	THICK. Rt (IN)	LENGTH Al (FT)	LENGTH Al (FT)	INITIAL WIDTH Aiw (FT)	TERMINAL WIDTH Atw (FT)	
DISCHARGE CULVERT 1	12	3	9	6	6	3	9	

NOTES:

1. ALL APRONS SHALL BE CONSTRUCTED TO THE DIMENSIONS SHOWN ON THE PLANS. TERMINAL WIDTHS SHALL BE ADJUSTED AS NECESSARY TO MATCH RECEIVING CHANNELS.
2. ALL APRONS SHALL BE INSPECTED AT LEAST WEEKLY AND AFTER EACH RUNOFF EVENT. DISPLACED RIPRAP WITHIN THE APRON SHALL BE REPLACED IMMEDIATELY.

RIP-RAP APRON AT PIPE OUTLET WITH FLARED END SECTION

N.T.S

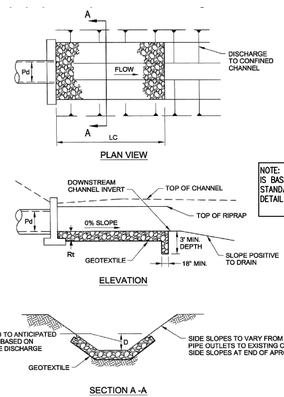

NOTE: THIS DETAIL IS BASED ON PADEP STANDARD CONSTRUCTION DETAIL #9-3.

NOTES:

1. ALL APRONS SHALL BE CONSTRUCTED TO THE DIMENSIONS SHOWN ON THE PLANS. TERMINAL WIDTHS SHALL BE ADJUSTED AS NECESSARY TO MATCH RECEIVING CHANNELS.
2. ALL APRONS SHALL BE INSPECTED AT LEAST WEEKLY AND AFTER EACH RUNOFF EVENT. DISPLACED RIPRAP WITHIN THE APRON SHALL BE REPLACED IMMEDIATELY.

OUTLET NO.	PIPE DIA Pd (IN)	RIPRAP		APRON				
		SIZE (R-_)	THICK. Rt (IN)	LENGTH LC (FT)	INITIAL BOTTOM WIDTH (FT)	END WIDTH (FT)	INITIAL TOP WIDTH (FT)	SIDE SLOPES H:V
VEGETATED SWALE 1A	N/A	6	36	19	3	18	18	3:1
VEGETATED SWALE 1B	N/A	6	36	19	2	18	18	3:1

RIP-RAP APRON AT PIPE OUTLET TO AN EXISTING CHANNEL

N.T.S PADEP-9-3

NOTE: THIS WILLIAMS STANDARD DETAIL IS BASED ON PADEP STANDARD CONSTRUCTION DETAIL #6-1.

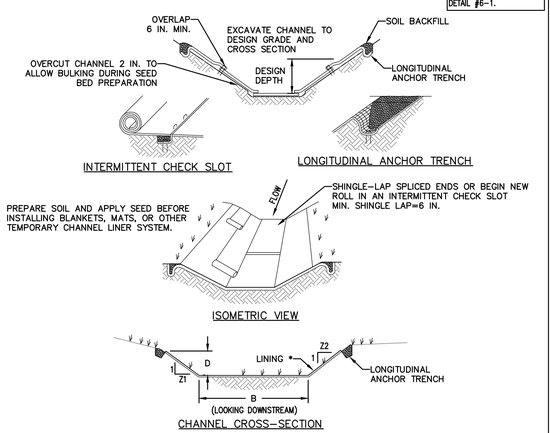

* SEE MANUFACTURER'S LINING INSTALLATION DETAIL FOR STAPLE PATTERNS, VEGETATIVE STABILIZATION FOR SOIL AMENDMENTS, SEED MIXTURES AND MULCHING INFORMATION

NOTES:

ANCHOR TRENCHES SHALL BE INSTALLED AT BEGINNING AND END OF SWALE IN THE SAME MANNER AS LONGITUDINAL ANCHOR TRENCHES.

SWALE DIMENSIONS SHALL BE CONSTANTLY MAINTAINED. SWALE SHALL BE CLEANED WHENEVER TOTAL SWALE DEPTH IS REDUCED BY 25% AT ANY LOCATION. SEDIMENT DEPOSITS SHALL BE REMOVED WITHIN 24 HOURS OF DISCOVERY OR AS SOON AS SOIL CONDITIONS PERMIT ACCESS TO SWALE WITHOUT FURTHER DAMAGE. DAMAGED LINING SHALL BE REPAIRED OR REPLACED WITHIN 48 HOURS OF DISCOVERY.

NO MORE THAN ONE THIRD OF THE SHOOT (GRASS LEAF) SHALL BE REMOVED IN ANY MOWING. GRASS HEIGHT SHALL BE MAINTAINED BETWEEN 2 AND 3 INCHES UNLESS OTHERWISE SPECIFIED. EXCESS VEGETATION SHALL BE REMOVED FROM PERMANENT SWALES TO ENSURE SUFFICIENT SWALE CAPACITY.

SWALE SUMMARY TABLE							
SWALE NO.	BOTTOM WIDTH B (FT)	DEPTH D (FT)	TOP WIDTH W (FT)	Z1 (FT)	Z2 (FT)	TEMPORARY LINING*	PERMANENT LINING
VEGETATED SWALE 1A/B	3.0/2.0	2.0	14.0	3.0	3.0	SC250	GRASS/SC250
VEGETATED SWALE 2	2.0	1.0	8.0	3.0	3.0	S75	GRASS

VEGETATED SWALE

N.T.S

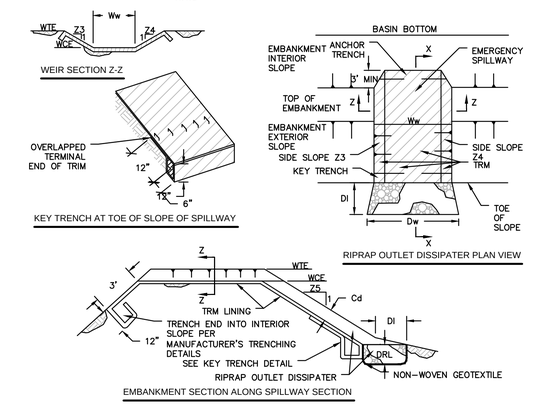

BASIN NO.	WEIR					LINING		SWALE		DISSIPATER			
	Z3 (FT)	Z4 (FT)	TOP ELEV WTE (FT)	CREST ELEV WCE (FT)	WIDTH Ww (FT)	TRM TYPE	STAPLE PATTERN	Z5 (FT)	DEPTH Cd (FT)	LENGTH DI (FT)	WIDTH Dw (FT)	RIPRAP SIZE (R-_)	RIPRAP THICK. DRL (IN)
1	3	3	1184.00	1183.00	30	P550	B	N/A	N/A	N/A	N/A	N/A	N/A

HEAVY EQUIPMENT SHALL NOT CROSS OVER SPILLWAY WITHOUT PRECAUTIONS TAKEN TO PROTECT TRM LINING.

DISPLACED LINER WITHIN THE SPILLWAY AND/OR OUTLET SWALE SHALL BE REPLACED IMMEDIATELY.

RIPRAP AT TOE OF EMBANKMENT SHALL BE EXTENDED A SUFFICIENT LENGTH IN BOTH DIRECTIONS TO PREVENT SCOUR.

THE USE OF BAFFLES THAN REQUIRE SUPPORT POSTS ARE RESTRICTED FROM USE IN BASINS REQUIRING IMPERVIOUS LINERS.

RAIN GARDEN EMERGENCY SPILLWAY WITH TRM LINING

N.T.S PADEP-7-13

ALARIC J. BUSHER REG NO. PE 60320

BL Companies — ARCHITECTURE, ENGINEERING, ENVIRONMENTAL, LAND SURVEYING

REVISIONS						
NO.	DATE	BY	DESCRIPTION	W.O. NO.	CHK.	APP.
0	08/28/2015	BL	ISSUED FOR PADEP PERMIT SUBMITTAL	W01161499	DAK	AJB
1	12/02/2015	BL	ISSUED FOR PADEP RESUBMITTAL	W01161499	DAK	AJB
3	03/28/2016	BL	ISSUED FOR PADEP RESUBMITTAL	W01161499	AJB	AJB
4	*Oct. 2016*	*BL*	*PADEP TECHNICAL DEFICIENCY RESPONSE #1*	*W01161499*	*AJB*	*AJB*

TRANSCONTINENTAL GAS PIPE LINE COMPANY, LLC

ATLANTIC SUNRISE PROJECT- PROPOSED 30" NATURAL GAS PIPELINE

POST CONSTRUCTION STORMWATER MANAGEMENT PLANS FOR NORTH DIAMOND REGULATOR STATION & ASSOCIATED PERMANENT ACCESS ROADS

LEHMAN TOWNSHIP, LUZERNE COUNTY, PENNSYLVANIA

PCSM NOTES AND DETAILS

Williams

DRAWN BY: JEC	DATE: 04/03/15	ISSUED FOR BID:		SCALE: AS NOTED	
CHECKED BY: AJB	DATE: 04/03/15	ISSUED FOR CONSTRUCTION:		REVISION: 4	
APPROVED BY: AJB	DATE: 07/17/15	DRAWING NUMBER:	(36-7935)MF-1A-9	SHEET 7 OF 8	
WO: 1161499					

Drawn By & Date/Time: hthomas Nov 11, 2016 - 12:01pm
Drawing Location & Name: G:\JOBS14\14C\14C4909\DWG\010-CPLN\FRS_PCSM14C4909(10)_NDIAMOND.dwg

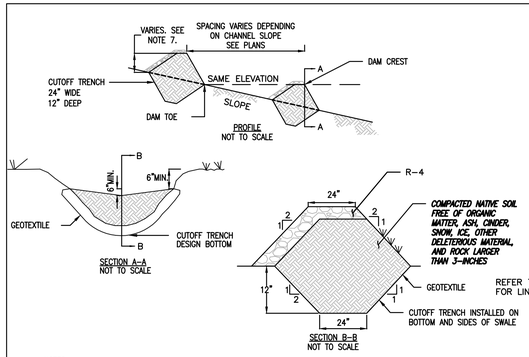

REFER TO CHANNEL DETAIL FOR LINING REQUIREMENTS.

NOTES:

1. CHECK DAMS ARE APPLICABLE FOR SMALL DITCHES AND SWALES AND ARE NOT TO BE USED IN LIVE FLOWING STREAMS.
2. CHECK DAMS SHALL BE INSTALLED SUCH THAT COMPLETE COVERAGE OF THE ENTIRE WIDTH OF THE DITCH OR SWALE IS ACHIEVED.
3. SEDIMENT SHALL BE REMOVED WHEN IT ACCUMULATES TO A DEPTH OF ONE–HALF THE ORIGINAL DAM HEIGHT.
4. SET SPACING OF CHECK DAMS TO ASSUME THAT THE ELEVATIONS OF THE CREST OF THE DOWNSTREAM DAM IS AT THE SAME ELEVATION OF THE TOE OF THE UPSTREAM DAM.
5. INSTALL A CUTOFF TRENCH A MINIMUM OF 12 INCHES INTO THE SWALE BOTTOM AND SIDES TO PREVENT CUTTING AROUND THE DAM.
6. ENSURE THAT CHANNEL APPURTENANCES SUCH AS CULVERT ENTRANCES BELOW CHECK DAMS ARE NOT SUBJECT TO DAMAGE OR BLOCKAGE FROM DISPLACED STONE.

EARTHEN CHECK DAM

N.T.S

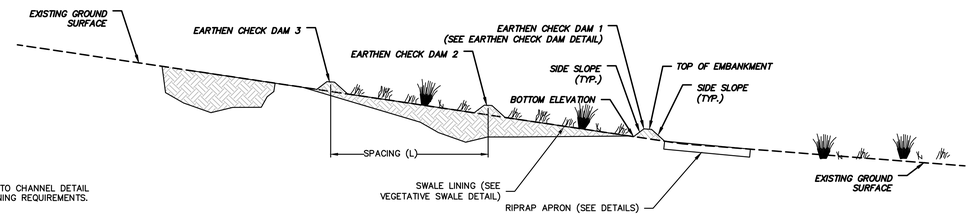

NOTE:
1. REFER TO EARTHEN CHECK DAM DETAIL FOR MORE INFORMATION.
2. ALL CHECK DAMS SHALL BE 1.0 FEET IN HEIGHT WITH 2:1 SIDE SLOPES AND A 2 FOOT TOP WIDTH.
3. EARTHEN CHECK DAMS SHALL BE INSTALLED WHEN SITE HAS BEEN STABILIZED AND RISK OF SEDIMENT ACCUMULATION IS MINIMAL.

EARTHEN CHECK DAM CROSS SECTION

N.T.S

CHECK DAM SUMMARY TABLE

SWALE NO.	CHECK DAM NO.	BOTTOM ELEVATION	TOP ELEVATION	TOP WIDTH W (FT)	SIDE SLOPE H:V	SPACING L (FT)
1A	1A–1	1170.5	1171.5	2.0	2:1	26
1A	1A–2	1171.5	1172.5	2.0	2:1	26
1A	1A–3	1172.3	1173.3	2.0	2:1	26
1A	1A–4	1173.3	1174.3	2.0	2:1	26
1A	1A–5	1174.3	1175.3	2.0	2:1	26
1A	1A–6	1175.4	1176.4	2.0	2:1	26
1A	1A–7	1176.3	1177.3	2.0	2:1	26
1A	1A–8	1177.3	1178.3	2.0	2:1	26
1A	1A–9	1178.2	1179.2	2.0	2:1	26
1A	1A–10	1178.7	1179.7	2.0	2:1	26
1A	1A–11	1179.2	1180.2	2.0	2:1	26
1A	1A–12	1179.8	1180.8	2.0	2:1	26
1A	1A–13	1180.7	1181.7	2.0	2:1	26
1A	1A–14	1181.7	1182.7	2.0	2:1	26
1A	1A–15	1182.7	1183.7	2.0	2:1	26
1A	1A–16	1183.8	1184.8	2.0	2:1	26
1A	1A–17	1184.9	1185.9	2.0	2:1	26
1A	1A–18	1185.9	1186.9	2.0	2:1	26
1A	1A–19	1186.5	1187.5	2.0	2:1	26
1A	1A–20	1187.0	1188.0	2.0	2:1	26
1A	1A–21	1187.5	1188.5	2.0	2:1	26
1A	1A–22	1188.2	1189.2	2.0	2:1	26
1A	1A–23	1189.3	1190.3	2.0	2:1	26
1A	1A–24	1190.3	1191.3	2.0	2:1	26
1A	1A–25	1191.4	1192.4	2.0	2:1	26
1A	1A–26	1192.5	1193.5	2.0	2:1	26
1A	1A–27	1193.5	1194.5	2.0	2:1	26
1A	1A–28	1194.3	1195.3	2.0	2:1	26
1A	1A–29	1194.8	1195.8	2.0	2:1	26
1A	1A–30	1195.3	1196.3	2.0	2:1	26
1A	1A–31	1195.8	1196.8	2.0	2:1	26
1A	1A–32	1196.8	1197.8	2.0	2:1	26
1A	1A–33	1197.9	1198.9	2.0	2:1	26
1A	1A–34	1198.9	1199.9	2.0	2:1	26
1A	1A–35	1200.0	1201.0	2.0	2:1	26
1A	1A–36	1201.1	1202.1	2.0	2:1	26
1A	1A–37	1202.2	1203.2	2.0	2:1	26
1B	1B–1	1170.8	1171.8	2.0	2:1	30
1B	1B–2	1171.6	1172.6	2.0	2:1	30
2	2–1	1188.0	1189.0	2.0	2:1	56
2	2–2	1188.9	1189.9	2.0	2:1	56
2	2–3	1189.8	1190.8	2.0	2:1	56

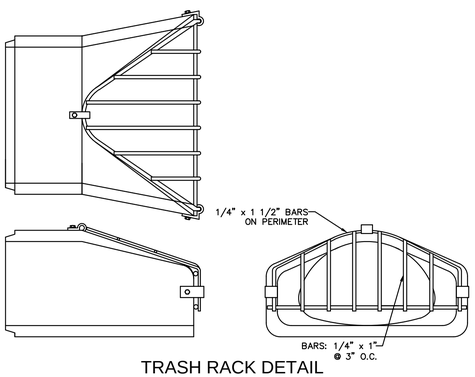

TRASH RACK DETAIL

N.T.S

Drawn By & Date/Time: hthomas Nov 11, 2016 – 12:01pm
Drawing Location & Name: G:\OBS14\14C\1464909\DWG\010-CPLN\FRS_PCSM14C4909(10)_NDIAMOND.dwg

REVISIONS

NO.	DATE	BY	DESCRIPTION	W.O. NO.	CHK.	APP.
0	08/28/2015	BL	ISSUED FOR PADEP PERMIT SUBMITTAL	WO1161499	DAK	AJB
1	12/02/2015	BL	ISSUED FOR PADEP RESUBMITTAL	WO1161499	DAK	AJB
3	03/28/2016	BL	ISSUED FOR PADEP RESUBMITTAL	WO1161499	AJB	AJB
4	Oct. 2016	BL	PADEP TECHNICAL DEFICIENCY RESPONSE #1	WO1161499	AJB	AJB

COMMONWEALTH OF PENNSYLVANIA
REGISTERED PROFESSIONAL
ALARIC JAMES BUSHER
EXPIRES 12/31/16
ALARIC J. BUSHER REG NO. PE 60320

BL Companies
ARCHITECTURE ENGINEERING ENVIRONMENTAL LAND SURVEYING

TRANSCONTINENTAL GAS PIPE LINE COMPANY, LLC
ATLANTIC SUNRISE PROJECT– PROPOSED 30" NATURAL GAS PIPELINE
POST CONSTRUCTION STORMWATER MANAGEMENT PLANS FOR NORTH DIAMOND REGULATOR STATION & ASSOCIATED PERMANENT ACCESS ROADS
LEHMAN TOWNSHIP, LUZERNE COUNTY, PENNSYLVANIA
PCSM NOTES AND DETAILS

Williams

DRAWN BY: JEC	DATE: 04/03/15	ISSUED FOR BID:		SCALE:	AS NOTED
CHECKED BY: AJB	DATE: 04/03/15	ISSUED FOR CONSTRUCTION:		REVISION:	4
APPROVED BY: AJB	DATE: 07/17/15	DRAWING NUMBER:	(36–7935)MF–1A–9	SHEET 8	OF 8
WO: 1161499					